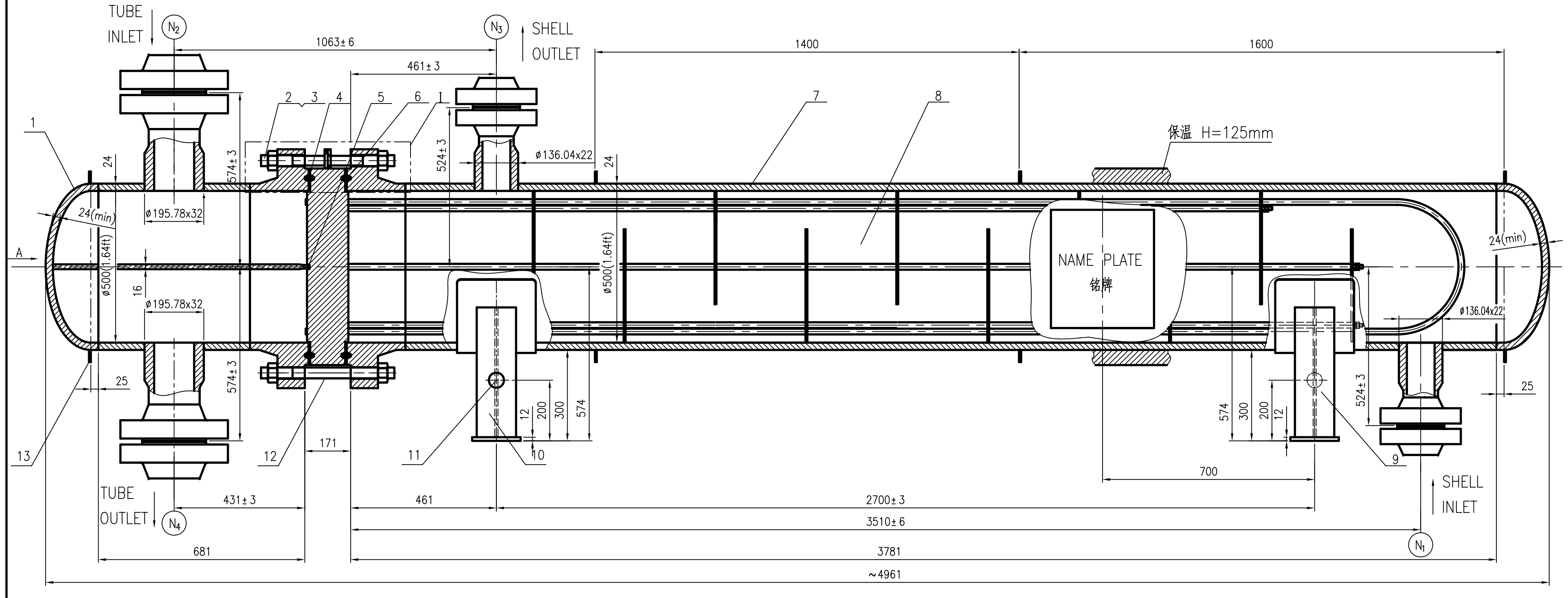

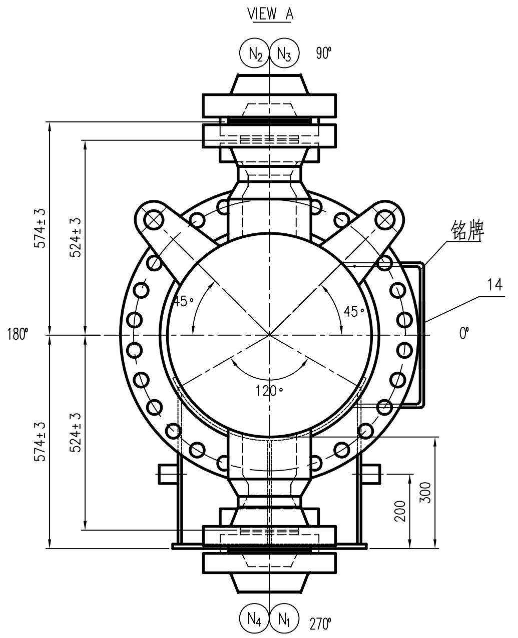

ANCHOR BOLTS INSTALLATION SIZE
地脚螺栓安装尺寸

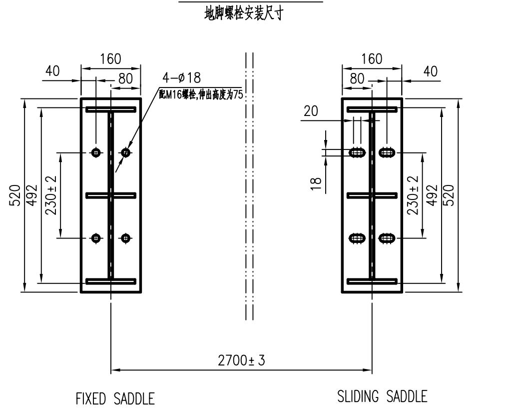

EARTHING BOSS WELD DETAIL
接地端子焊接详图

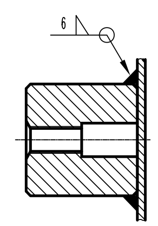

DETAIL I
详图I

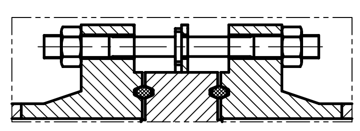

THE WELD NODE OF SHELL BARREL CIRCUMFERENTIAL JOINT & SHELL TO HEAD JOINT
筒体纵焊缝及筒体与封头焊接节点

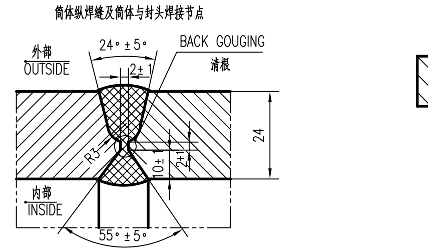

WELDING NOZZLE TO FLANGE
接管与法兰的焊接

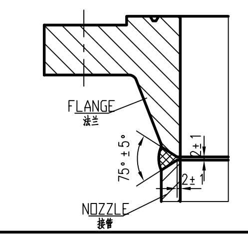

WELDING NOZZLTO SHELL
接管与壳体的焊接

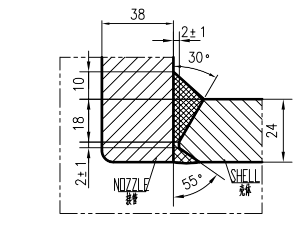

THE WELD NODE OF SHELL TO FLANGE
筒体与法兰焊接节点

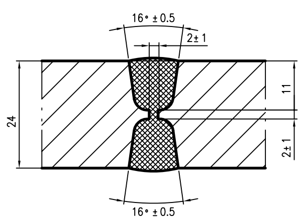

MATERIAL 材料

	DESCRIPTION 名称	MATERIAL 材料	STANDARD 执行标准	APPLICATION CONDITION 使用状态	INSPECTION REQ. 检测要求 RATIO,MEANS 检测率及检测方法	CRI. ACC. 合格标准	IMPACT TEST 冲击试验 MIN. TEMP. 最低冲击试验温度 °C	IMPACT ENERGY 冲击功Akv J	REMARKS 备注
PLATE 板材	HEAD+CYLINDER 封头+筒体	SA-516 Gr.70 (shell side)	ASME Sec.II	NORMALIZED					
	HEAD+CYLINDER 封头+筒体	SA-516 Gr.70 (tube side)	ASME Sec.II	NORMALIZED					
	SADDLE 鞍座	SA-516 Gr.70							
FORGINGS 锻件	VESSEL FLANGES 设备法兰	SA-266 Gr.2 (shell side)		NORMALIZED					
		SA-266 Gr.2 (tube side)		NORMALIZED					
	NOZZEL FLANGES 接管法兰	SA-105 (shell side)		NORMALIZED					
		SA-105 (tube side)		NORMALIZED					
	TUBESHEETS 管板	SA-266 Gr.2		NORMALIZED					
PIPE 管材	NOZZLE NECK 接管	SA-105		NORMALIZED					
	TUBES 换热管	SA-179							
FASTENER 紧固件	EXT. BOLTS 外部螺栓	SA-193 Gr.B7	ASME B18.2.1	QUENCHING 调质					HOT DIP GALVANIZED
	EXT. NUTS 外部螺母	SA-194 Gr.2H	ASME B18.2.2	QUENCHING 调质					HOT DIP GALVANIZED
	INT. BOLTS 内部螺栓	SA-193 Gr.B7	ASME B18.2.1	QUENCHING 调质					HOT DIP GALVANIZED
	INT. NUTS 内部螺母	SA-194 Gr.2H	ASME B18.2.2	QUENCHING 调质					HOT DIP GALVANIZED
	GASKETS 垫片	SOFT IRON	ASME B16.20						垫片硬度比密封面硬度至少小30HB

FABRICATION AND INSPECTION REQUIREMENT 制造与检验要求

ADDITIONAL FABRICATION REQUIREMENT 附加制造技术要求	

PAINTING 油漆	CODE 执行规范				NGP-000-PAI-15.03-0001-00			
			PURPOSES 用途	PAINT TYPE 油漆类别	COLOR 颜色	DRY FILM THICKNESS 干膜厚度(μm)	AREA 涂漆面积 (m²)	REMARKS 备注
	EXTERIOR SURFACE 外涂漆	SHELL 壳程	PRIMER 底漆	INORGANIC ZINC SILICATE PRIMER	LIGHT GRAY RAL 7035	50~55	6.6	
			INTERMEDIATE COATING 中间漆	HEAT RESISTING PAINT (SILICONE RESIN)	LIGHT GRAY RAL 7035	25		
			FINISH COATING 面漆	HEAT RESISTING PAINT (SILICONE RESIN)	LIGHT GRAY RAL 7035	25		
		TUBE 管程	PRIMER 底漆	INORGANIC ZINC SILICATE PRIMER	LIGHT GRAY RAL 7035	50~55	1.24	
			INTERMEDIATE COATING 中间漆	HEAT RESISTING PAINT (SILICONE RESIN)	LIGHT GRAY RAL 7035	25		
			FINISH COATING 面漆	HEAT RESISTING PAINT (SILICONE RESIN)	LIGHT GRAY RAL 7035	25		

OTHER FABRICATION AND INSPECTION REQUIREMENTS 其他制造与检验要求

1. UNLESS OTHERWISE NOTED, ALL DIMENSIONS ON THE DRAWINGS ARE IN MILLIMETER;
除注明者外,图中所有尺寸单位为毫米;
2. ALL FLANGE BOLTHOLES SHALL STRADDLE THE PRINCIPAL CENTERLINES OF THE VESSEL;
所有法兰螺栓孔均须跨中布置;
3. UNLESS OTHERWISE NOTED, THE FORMED HEIGHT OF ALL LAP WELDS AND FILLET WELDS SHALL BE THE THINNER THICKNESS OF CONNECTING PLATES, AND SHOULD BE CONTINUOUS;
除注明者外,所有搭接和角接焊缝脚高均等于较薄板厚度,且为连续焊;
4. ALL JOINTS TYPE SHALL BE DETERMINED BY FABRICATOR AND SHALL BE FULL PENETRATION.
所有焊缝接头形式可由制造厂自行决定,但须保证全焊透形式;
5. BEFORE HEAT TREATMENT,ALL STRUCTURAL PARTS SHOULD BE WELDED TO EQUIPMENT;
AFTER HEAT TREATMENT,NO WELDED ON EQUIPMENT;
热处理前应仔细检查结构件焊接于壳体内部及外部,不得遗漏;热处理后,禁止在设备上施焊.
6. THE TUBE SHALL NOT ALLOW BUTT WELD ,THE CHANNEL SHALL CARRY OUT OVERALL STRESS RELIEF HEAT TREATMENT AFTER WELDED (EXCEPT TUBE BUNDLE).
换热管不允许拼接;管箱组焊完毕应进行整体消除应力热处理(不包括管束);
7. THE SEQUENCE OF HYDRAULIC TEST :a. CARRY OUT PRESSURE TEST AT SHELL SIDE BY TEST RING,AND INSPECT JOINT SIMULTANEOUSLY; b. CARRY OUT PRESSURE TEST AT TUBE SIDE.
水压试验顺序:a.用试验压环进行壳程试验，同时检查管头;b.管程试压;.
8. HYDRAULIC TEST SHALL BE CONDUCTED ON EACH PIECE OF TUBE ,AND THE TEST PRESSURE SHALL BE 11.2 MPa;
U形换热管弯制后逐根进行水压试验，试验压力为: 11.2MPa;
9. THE HYDROSTATIC TEST PRESSURE SHALL BE MAINTAINED FOR NOT LESS THAN 60 MINUTES AT EACH SIDE;
THE PRESSURE CAN BE FOUND IN DESIGN DATA TABLE.
各侧水压试验保压时间不少于60分钟; 水压试验压力见技术数据表.
10. HOT INSULATION OF HEAT EXCHANGER SHALL BE IN ACCORDANCE WITH NGP-000-PIP-15.03-0004-00-C;
换热器的保温按NGP-000-PIP-15.03-0004-00-C的要求进行;
11. THE HEAT EXCHANGER SHALL BE THOROUGHLY CLEANED INSIDE AND OUTSIDE AND SHALL BE FREE FROM GREASE, WELD SPATTER, SCALE, SLAG, RUST AND ANY OTHER FOREIGN MATTER;
换热器制造完后内外应清理干净,不得有油脂,焊渣,铁块等杂物;
12. AFTER COMPLETION OF ALL TEST AND INSPECTION THE HEAT EXCHANGER SHALL BE CLEANED, DRIED. ALL FINISHED SURFACES SHALL BE COATED WITH RUST PREVENTATIVES; ALL FLANGE FACING SHOULD BE PROTECTED WITH GASKET AND COVER PLATE (WATER TIGHT);
所有试验和检验完成后,换热器必须清理干净并干燥; 所有加工面必须用防锈剂保护; 所有法兰面均须用防锈盖板保护.
13. THE EXCHANGER SHALL BE PROTECTED BY NITROGEN DURING SHIPPING. BEFORE SHIPPING ,EXCHANGERS SHALL BE FILLED WITH NITROGEN AT 0.02~0.03MPaG;AND INSTALLED TWO PRESSURE GAGE TO DETECT THE PRESSURE.
DO NOT ENTER THE EXCHANGER BEFORE ALL NITROGEN IS OUT.
设备运输过程中要求充氮保护,要求:发货前，用0.02~0.03MPa(G)的氮气充满换热器，在换热器上安装两个压力表，以检测氮气压力;
运输过程中，保证压力表不被破坏; 设备内充满氮气，氮气全部排出前不得进入设备。

NOTE: 注:
1. THICKNESS OF HEAD IN THIS DRAWING ARE MIN. AFTER FINAL FORMATION;
图示封头厚度为最终成型后的最小厚度;
2. ALL THE WEAR PLATE OF THE HEAT EXCHANGER SHALL HAVE M6 WEEP HOLES;
所有换热器上单独的垫板上必须设有M6的排气孔;
3. ALL FLANGES SHALL BE MARKED ON O.D.SURFACES,AS:DN50(2")-300LB-WN-RF-SCH160,
所有法兰外边缘应打标记;例如，DN50(2")-300LB-WN-RF-SCH160,
4. EXPOSED EDGES SHALL BE ROUNDED R=3.
所有尖角倒钝R=3.
5. THE DESIGNED SERVICE LIFE OF THE EQUIPMENT IS 25 YEARS(EXCEPT TUBE BUNDLE).
设备的设计年限为25年(不包括管束)

DESIGN DATA TABLE
技术数据表

U-STAMP U-钢印 YES / NO	YES	THIRD PARTY INSPECTION 第三方检验		YES
NATIONAL BOARD REGISTRATION REQ'D NB注册 YES / NO	NO	VESSEL CATEGORY P.R.C 容器类别		

DESIGN PARAMETER 设计参数

PARAMETER	SHELL SIDE 壳程	TUBE SIDE 管程
HEAT EXCHANGER TYPE 换热器型式	BEU U形管式换热器	
PARAMETER NAME 参数名称	SHELL SIDE 壳程	TUBE SIDE 管程
OPERATING PRESSURE 工作压力 MPa(PSI)	7.34(1064)	7.40(1074)
DESIGN PRESSURE 设计压力 MPa(PSI)	8.62(1250)	8.62(1250)
MAWP 最高允许工作压力 MPa(PSI)	8.62(1250) AT400°F	8.62(1250) AT 650°F
MAEWP 最高允许工作外压 MPa(PSI)		
OPERATING TEMP.(IN/OUT) 工作温度(进/出) °C(°F)	31.4~155.2 (88.5~311.29)	283.1~169.2 (541.5~336.63)
DESIGN TEMPERATURE 设计温度 °C(°F)	204.4(400)	343.4(650)
MDMT 最低设计金属温度 °C(°F)	-5°C AT 8.62MPaG	-5°C AT 8.62MPaG
MEDIUM 介质	NATURE GAS 天然气	NATURE GAS 天然气
MEDIUM CHARACTERISTIC 介质特性	NON-LETHAL 非致死性介质	NON-LETHAL 非致死性介质
MAIN PRESSUER PART MATERIAL 主要受压元件	SA-516 Gr70 NORMALIZED	SA-516 Gr70 NORMALIZED
CORR.ALLOWANCE 腐蚀裕量 mm(inch)	3(0.118)	3(0.118)
JOINT EFFICIENCY 焊接接头系数	1.0	1.0
PASSES 程数	1	2
INSULATION THK. 保温厚度 mm	125	125
INSULATION MATERIAL 保温材料	MINERAL WOOL SLABS	MINERAL WOOL SLABS
SURFACE AREA 换热面积 m²	56.2	
TUBE No.x øxtxL 换热管数量规格øxtxL mm	128xø19x2.0x3600	
JOINT TYPE OF TUBE SHEET 管子与管板连接方式	STRENGTH WELDING+LIGHT EXPANDED 强度焊加贴胀	
EQUIPMENT NET WEIGHT 设备净重 kg	3975	
OPENRATION WEIGHT 操作重量 kg	4288	
HYDROSTATIC TEST WEIGHT 水压试验重量 kg	4814	
TUBEBUNDLE WEIGHT 管束重量 kg	1187.5	
WIND SPEED 风速 km/h(mile/hr)	161(100)	

DESIGN、FABRICATION & INSPECTION STANDARD 设计,制造,检验标准

1. ASME CODE SECTION VIII DIV.1 2015 EDITION
2.TEMA, NINTH EDITION, CLASS"R"
1.ASME 锅炉及压力容器规范 第VIII卷第1分册, 2015版
2.参照TEMA"R"级,第九版.

WELDING MATERIAL 焊接材料: FABRICATION AND INSPECTION REQUIREMENTS FILLER METALS HAVE CHEMCAL COMPOSITIONS,MECHANICAL PROPERTIES MATCHED WITH THOSE OF THE BASE METALS, FOR DETAIL OF WELDING MATERIAL TYPE,SEE WPS
制造与检验标准
填充金属的化学成分,机械性能和韧性与母材相匹配,
焊接材料型号详见焊接工艺指导书,

NDE 无损检测

WELDED JOINTS 焊接接头种类		CATEGORY		TEST RATIO 检测率	TEST MEANS 检测方法	GRADE 合格级别
SHELL SIDE 壳程	A	SHELL 筒体		FULL	RT1	UW-51
		HEAD 封头		FULL	RT1	UW-51
	B,C			FULL	RT1	UW-51
	D			FULL	MT/PT	APD.6/8
TUBE SIDE 管程	A	SHELL 筒体		FULL	RT2/UT	UW-51
		HEAD 封头		FULL	RT2	UW-51
	B,C			FULL	RT2	UW-51
	D			FULL	MT/PT	APD.6/8

TEST 试验

TEST TYPE 试验种类	SHELL SIDE 壳程	TUBE SIDE 管程
HYDROSTATIC TESTING PRESSURE(V) 水压试验压力 (垂直) MPa(PSI)		
HYDROSTATIC TESTING PRESSURE (H) 水压试验压力 (水平) MPa(PSI)	11.20(1625) @12~40°C	11.20(1625) @12~40°C
POST WELD HEAT TREATMENT 焊后热处理	NO	YES
CAPACITY 设备容积 m³	0.73	0.12
IMPACT TEST 冲击试验	NO.(UCS-66)	
EARTHQUAKE ZONE 地震区域	2B	

NOZZLE SCHEDULE 管口表

	SERVICE 用途	NPS. 公称尺寸	QTY. 数量	CLASS 压力等级	TYPE 型式	FACE 密封面	PROJ FROM SHELL CL. 外伸高度	MATERIAL 材质	NECK SIZE 焊端规格	REMARK 备注
N1	SHELL SIDE INLET 壳程进口	4"	1	900LB	WN	RTJ	524	SA-105	SCH80	ASME B16.5
N2	TUBE SIDE INLET 管程进口	6"	1	900LB	WN	RTJ	574	SA-105	SCH160	ASME B16.5
N3	SHELL SIDE OUTLET 壳程出口	4"	1	900LB	WN	RTJ	524	SA-105	SCH80	ASME B16.5
N4	TUBE SIDE OUTLET 管程出口	6"	1	900LB	WN	RTJ	574	SA-105	SCH160	ASME B16.5

(FLANGE TYPE&CONNECTION 法兰类型及密封面型式: CLASS, TYPE, FACE; MATCH FLANGE 配对法兰: MATERIAL, NECK SIZE)

ALLOWABLE EXTERNAL LOADING OF NOZZLES 接管许用外载荷

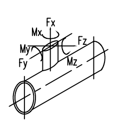

NOMINAL DIAMETER NPS	mm	FLANGE GLASS	FORCES (kN) Fx	Fy	Fz	MOMENTS (kN.m) Mx	My	Mz
4"	250	900	3.785	4.46	4.46	2.485	1.76	1.76
6"	300	900	7.25	8.88	8.88	7.185	5.08	5.08

ITEM NO. 序号	DWG NO. OR CODE 图号或标准	DESCRIPTION 名称及规格	MATERIAL 材料	QTY. 数量	UNIT WEIGHT 单件重量	TOTAL WEIGHT 合计重量 (Kg)	REMARKS 备注
14	U-16-14-12-00	NAME PLATE 铭牌	PARTS 组合件	1		8.5	
13	U-16-14-11	INSULATION SUPPORT 保温支撑	SA-516Gr.70N	4	8.5	34	
12	ASME B18.2.1	SCREW BOLTS 全螺纹螺柱 M36x440	SA-193 Gr.B7	24	3.5	84	HOT DIP GALVANIZED 热浸锌
11	U-16-14-10	EARTHING BOSS 接地端子	S31608	2	0.8	1.6	
10	U-16-14-09-00	FIXED SADDLE 固定鞍座	PARTS 组合件	1		49	SEE IN DRAWING U-16-14-08-00
9	U-16-14-08-00	SLIDING SADDLE 滑动鞍座	PARTS 组合件	1		49	
8	U-16-14-07-00	BUNDLE 管束	PARTS 组合件	1		1187.5	
7	U-16-14-06-00	SHELL 壳体	PARTS 组合件	1		1611.37	
6	U-16-14-05	SHELL GASKETS 管箱侧垫片	SOFT IRON	1		8.358	SEE IN DRAWING U-16-14-03
5	U-16-14-04	PARTITION PLATE GASKETS 隔板垫片	ALUMINUM	1		0.1	
4	U-16-14-03	CHANNEL GASKETS 管箱垫片	SOFT IRON	1		8.358	
3	ASME B18.2.1	NUTS 螺母 M36	SA-194 Gr.2H	56	0.46	25.8	HOT DIP GALVANIZED 热浸锌
2	U-16-14-02	FIXED BOLTS 带肩双头螺柱 M36x440	SA-193 Gr.B7	4	4.34	17.36	HOT DIP GALVANIZED 热浸锌
1	U-16-14-01-00	CHANNEL 管箱	PARTS 组合件	1		890	

Rev.	Revision Description	Date	Originate By	Review By	Approve By
0	IFC- Issued For Construction	2016.05.20	ZHENG.Y	WANG.C.	WANG.C.

Project 项目名称	巴基斯坦NASHPA项目		
Client 业主	HBP	Client project NO.业主项目号	
EPPC Contractor 工程总包方	HBP		

上海蓝滨石化设备有限责任公司
Shanghai LanBin Petrochemical Equipment Co., Ltd.

Prepared 设计	[signature]	2016.07.14	图名 DWG NAME	Project 项目	OED2016-13
REVIEWED 审核	[signature]	2016.07.14	REGEN GAS SUB COOLER 再生气体冷却器	Sub-Title 分项名称 / Client 用户	
Approved 批准	[signature]	2016.07.14	(E-2302)	Scale 比例 1:10	Weight 质量 3975
Job No. 工号	BU16-14		BEU 500-8.62-56.2-3.6/19-2	DWG NO: 图号	U-16-14-00
Draw 画法				Phase 设计阶段: Construction 施工图	Page 1 of 1 第1张 共1张 Rev. 版次 0