REFERENCE DRAWING	
DESCRIPTION	DRAWING NO.

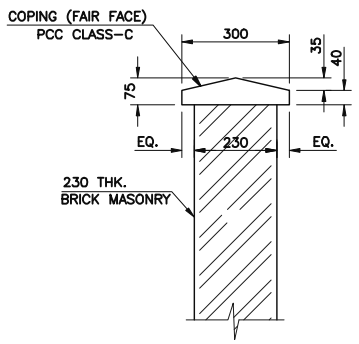

DETAIL. 'C'

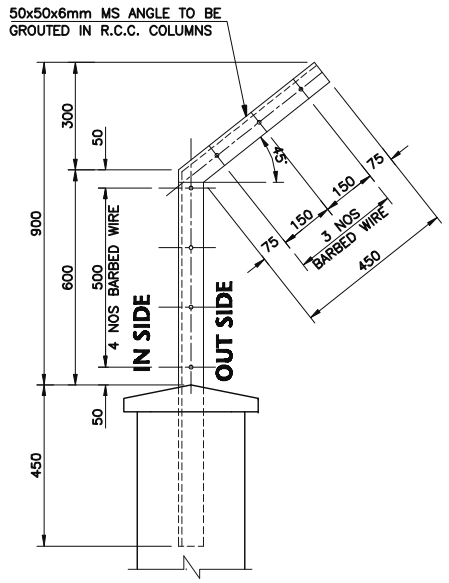

VIEW-Y

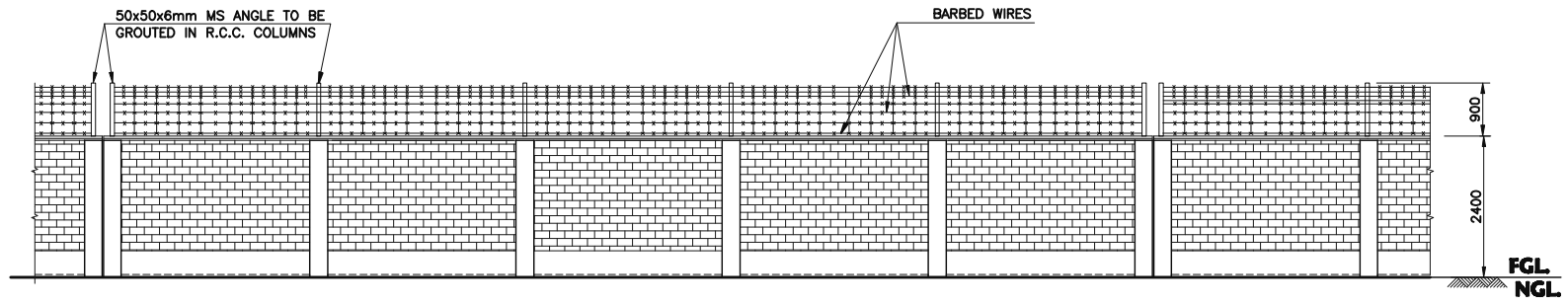

ELEVATION # 01

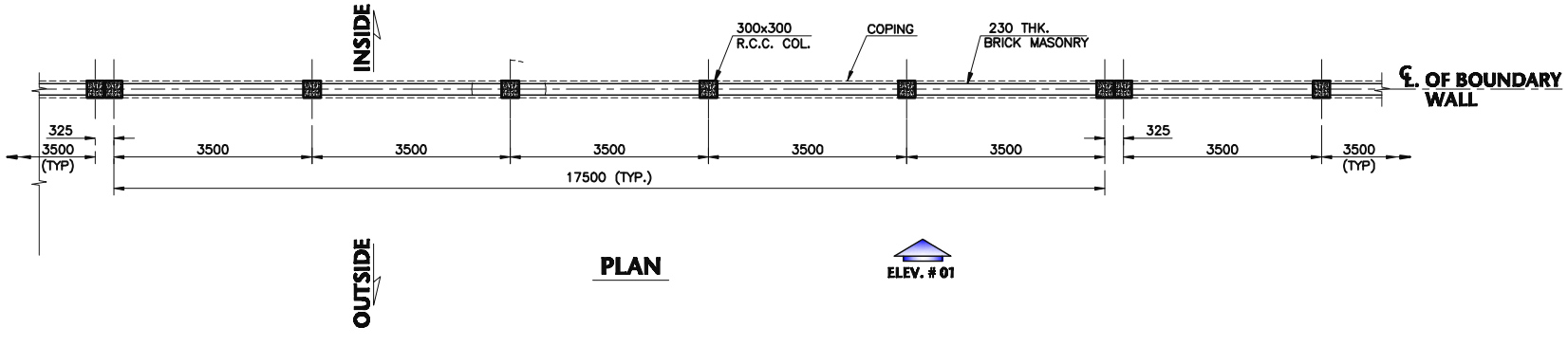

PLAN

ELEV. # 01

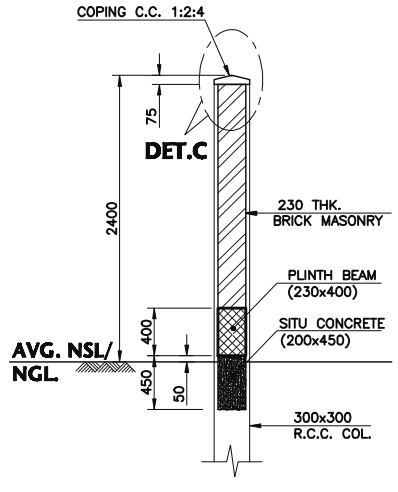

TYP. DETAIL OF BOUNDARY WALL

NOTES:-

1. ALL DIMENSIONS ARE IN mm UNLESS OTHERWISE STATED.
2. FOR BOUNDARY WALL LOCATION & ORIENTATION REFER PLOT PLAN.
3. BRICK MASONRY SHALL BE SET IN CEMENT SAND MORTAR RATIO 1:4
4. THE BRICK SHOULD BE PROPERLY RACKED OUT, INCLUDING CLEANING OF JOINTS, CURING ETC. SO AS TO HAVE PLEASING APPEARANCE.
5. GALVANIZED BARBED WIRE SHALL BE 2.50mm DIAMETER WITH 1.90mm DIAMETER FOUR POINT ROUND BARS SPACED AT 150 C/C
6. EXTENSION ARM 60.3x4.0 L SHALL BE GALVANIZED IN ACCORDANCE WITH B.S.729.

ISSUED FOR TENDER

REV.	DATE	DESCRIPTION OF REVISION	DRAWN	DESIGN	CHKD.	QC	APPR.
A	07-01-2022	ISSUED FOR TENDER	MD	KM	KM	PM	SFA

ENAR PETROTECH SERVICES (PRIVATE) LIMITED
7-B, Sector 7-A Korangi Industrial Area, Karachi Pakistan
TEL: (9221) 5062791 E-mail: info@enar.com.pk
URL:www.enar.com.pk

Job No. **14-0258**

OIL & GAS DEVELOPMENT COMPANY LTD.
OGDCL HOUSE TOWER-B, FIRST FLOOR FEGLELUE AREA,
JINNAH AVENUE BLAMABAD PAKISTAN
FAX : +92 51 2822000, PHONE: +92-51-2822000

Dwg. No. **0258-CD-7302**

KPD-TAY COMPRESSION PROJECT
TAY-03 GGS
STANDARD DRAWING
BOUNDARY WALL

COMPUTER CODE	0258-CD-7302
SHEET SIZE	A1
SCALE	1:30
REPLACES DWG. NO.	

THIS DOCUMENT IS THE PROPERTY OF ENAR & THE CONTENTS MUST BE TREATED AS CONFIDENTIAL