OIL AND GAS DEVELOPMENT COMPANY LIMITED

TENDER # PROC-SERVICES/CB/P&P-5054/2021
HIRING OF SERVICES FOR EXECUTION OF ATA-2021 JOBS AT SINJHORO GAS FIELD

0604246 - DESIGN OF PANDHI TIE IN AT SINJHORO PLANT

CONSULTANTS: **MARCH, 2020**

Petrochemical Engineering Consultants
C-2, Block No. 17, Gulshan-E-Iqbal, Karachi-75300, Pakistan.
Telephones: +92 (21) 34827780, 34961088, Fax: +92 (21) 34961089
E-Mail: contact@pcec.com.pk web: www.pcec.com.pk

TABLE OF CONTENTS

SECTION NO.	DESCRIPTION
1.0	PROCESS PACKAGE
2.0	MECHANICAL PACKAGE
3.0	CIVIL PACKAGE

OIL AND GAS DEVELOPMENT COMPANY LIMITED

0604246 - DESIGN OF PANDHI TIE IN AT SINJHORO PLANT

(Process Package)

CONSULTANTS: **MARCH, 2020**

Petrochemical Engineering Consultants
C-2, Block No. 17, Gulshan-E-Iqbal, Karachi-75300, Pakistan.
Telephones: +92 (21) 34827780, 34961088, Fax: +92 (21) 34961089
E-Mail: contact@pcec.com.pk web: www.pcec.com.pk

CONTENTS

SECTION NO.	DESCRIPTION
1.0	FLASH CALCULATION OF PANDHI WELLHEAD TIE-IN AT SINJHORO PLANT REPORT
2.0	DATASHEETS
3.0	PIPING & INSTRUMENTATION DIAGRAM

OIL AND GAS DEVELOPMENT COMPANY LIMITED

0604246 - DESIGN OF PANDHI TIE IN AT SINJHORO PLANT

FLASH CALCULATION OF PANDHI WELLHEAD TIE-IN AT SINJHORO PLANT

(0604246-PRO-RP-0001)

CONSULTANTS: **MARCH, 2020**

Petrochemical Engineering Consultants

C-2, Block No. 17, Gulshan-E-Iqbal, Karachi-75300, Pakistan.
Telephones: +92 (21) 34827780, 34961088, Fax: +92 (21) 34961089
E-Mail: contact@pcec.com.pk web: www.pcec.com.pk

Disclaimer

This report has been prepared on behalf of OGDCL and for the exclusive use of Oil & Gas Development Limited and is subject to and issued in accordance with the agreement between Petrochemical Engineering Consultants (PEC) and OGDCL. Petrochemical Engineering Consultants accept no liability or responsibility whatsoever for it in respect of any use of or reliance upon this report by any third party.

Copying this report without the permission of Petrochemical Engineering Consultants is not permitted.

REV	DESCRIPTION	ORIG	REVIEW	PEC APPROVAL	DATE	CLIENT APPROVAL	DATE
0	Issued for Review	Shoaib	Adeel	Adeel	20th March, 2020		

TABLE OF CONTENT

1 EXECUTIVE SUMMARY 4

2 STUDY BASIS 6

3 SCHEMATIC REPRESENTATION OF CASES 10

4 RESULTS 16

5 CONCLUSION AND RECOMMENDATIONS 17

Attachments:

Annexure-A: HP Separation @ 1240 psig without line heater

Annexure-B: MP Separation @ 650 psig without line heater

Annexure-C: HP Separation @ 1240 psig with existing line heater

Annexure-D: MP Separation @ 650 psig with existing line heater

Annexure-E: HP Separation @ 1240 psig with new heater

Annexure-F: MP Separation @ 650 psig with new heater

Annexure-G: Test Separator Results

1 EXECUTIVE SUMMARY

Sinjhoro Gas Plant located in Sindh province owns and operates by Oil and Gas Development Company Limited (OGDCL). Sinjhoro plant comprises of gas dehydration, membrane, LPG extraction units and sales gas compression.

OGDCL intends to tie Pandhi wellhead for gas & Condensate processing at Sinjhoro plant. Therefore, OGDCL acquired PEC services to simulate and estimate LPG content in gas and Condensate flash gas.

Schematic below highlights the proposed scheme for processing of Pandhi gas & Condensate at Sinjhoro plant.

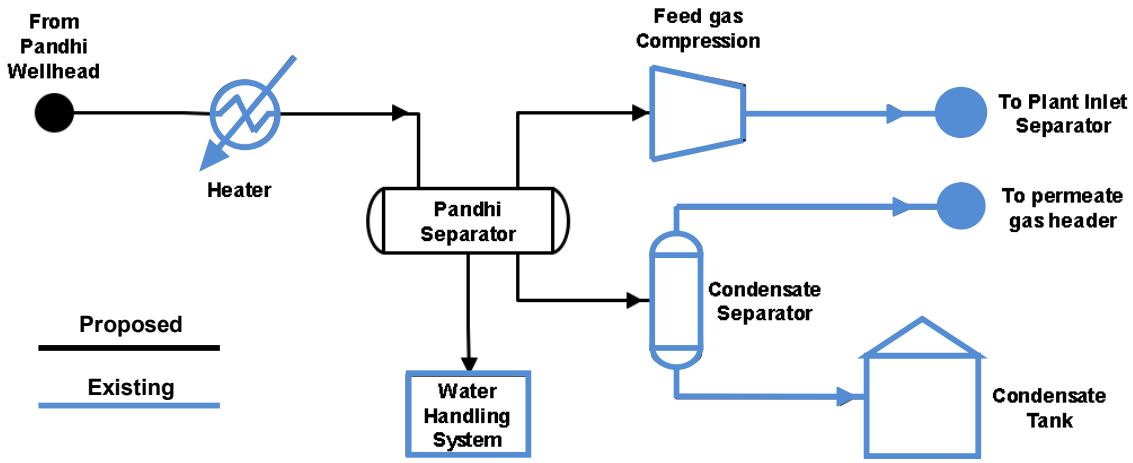

Figure 1: Proposed scheme for processing of Pandhi gas & condensate at Sinjhoro plant

Following cases are considered for estimation of LPG content in gas and condensate flash gases:

Case-1A: HP Separation @ 1240 psig without line heater and combined flash gases @ 20 psig with membrane permeate.

Case-1B: MP Separation @ 650 psig without line heater and combined flash gases @ 20 psig with membrane permeate.

Case-2A: HP Separation @ 1240 psig with existing line heater and combined flash gases @ 20 psig with membrane permeate.

Case-2B: MP Separation @ 650 psig with existing line heater and combined flash gases @ 20 psig with membrane permeate.

Case-3A: HP Separation @ 1240 psig with new line heater and combined flash gases @ 20 psig with membrane permeate.

Case-3B: MP Separation @ 650 psig with new line heater and combined flash gases @ 20 psig with membrane permeate.

Feed Gas contains about 24.5 tonne/day LPG content. Separator Gas and Condensate flash gas LPG Content (TPD) for each case is present below in table-1:

Cases	Separator Gas LPG Content tonne /day	Condensate Flash Gas LPG Content tonne/day
CASE-1A	19.53	3.5
CASE-1B	20.33	2.369
CASE-2A	21.08	3.023
CASE-2B	22.07	1.994
CASE-3A	22.48	1.871
CASE-3B	23.20	1.140

Table 1: Separator Gas and Condensate flash gas LPG Content (TPD)

2 STUDY BASIS

Flash calculation for separation system is carried out using process software tool Aspen HYSYS.

2.1 CASES DEFINITION

Cases	Definition
Case-1A	HP Separation @ 1240 psig without line heater and combined flash gases @ 20 psig with membrane permeate.
Case-1B	MP Separation @ 650 psig without line heater and combined flash gases @ 20 psig with membrane permeate.
Case-2A	HP Separation @ 1240 psig with existing line heater and combined flash gases @ 20 psig with membrane permeate.
Case-2B	MP Separation @ 650 psig with existing line heater and combined flash gases @ 20 psig with membrane permeate.
Case-3A	HP Separation @ 1240 psig with new line heater and combined flash gases @ 20 psig with membrane permeate.
Case-3B	MP Separation @ 650 psig with new line heater and combined flash gases @ 20 psig with membrane permeate.

2.2 SINJHORO GATHERING SEPARATOR CONDITIONS

Operating Pressure of Sinjhoro gathering separation system is consolidated below:

Separator	Pressure (psig)
HP Separator	1232
LP/MP Separator	660

2.3 TEST SEPARATOR OPERATING CONDITIONS

Wellhead test separator operating conditions are:

Parameter	Valve
Pressure (Psig)	450
Temperature (°F)	85
Gas Flow rate (MMSCFD)	5.38
Condensate Flow rate(BPD)	450
Water Flow rate (BPD)	290

2.4 WELL FLUID COMPOSITION

Well fluid composition is generated using test separator gas analysis and condensate properties and ASTM D-86 analysis provided by OGDCL.

Flash gas composition is calculated through HYSYS simulation method as it was missing in condensate assay details.

2.4.1 PANDHI GAS ANALYSIS

Component	Mol %
Methane(C1)	76.14
Ethane(C2)	10.26
Propane(C3)	5.143
Iso-Butane(C4)	0.649

N-Butane(n-C4)	1.248
Iso-Pentane(i-C5)	0.2680
N-Pentane(n-C5)	0.3060
Hexane Plus(C6+)	0.5010
CO2	3.4040
N2	2.0720
H2S (ppm)	2.00

2.4.2 PANDHI CONDENSATE PROPERTIES

Test method	Parameters	Test results
D-1298	Specific Gravity @60/60°F	0.8350
D-445	Kinematic Viscosity , @70°F,cSt	3.66
D-445	Kinematic Viscosity , @100°F,cSt	2.91
D-445	Kinematic Viscosity , @122°F,cSt	2.51
D-4294	Sulfur Content, Wt%	0.400
D-96	B.S & W. Vol%	0.4
D-95	Water Content, Vol%	0.3
D-3230	Salt Content, lb/1000 bbl	5
D-97	Pour Point°, C	+30

2.4.3 PANDHI CONDENSATE ASTM D-86 ANALYSIS

Volume Percent	Temperature
Initial Boiling Point (IBP)	70°C
10%	110 °C
20%	134 °C
30%	172 °C
40%	237 °C
50%	296 °C
60%	352 °C
70%	-
80%	-
85%	-
90%	-
Maximum Temperature Observed	360 °C

3 SCHEMATIC REPRESENTATION OF CASES

3.1 FOR CASE-1A

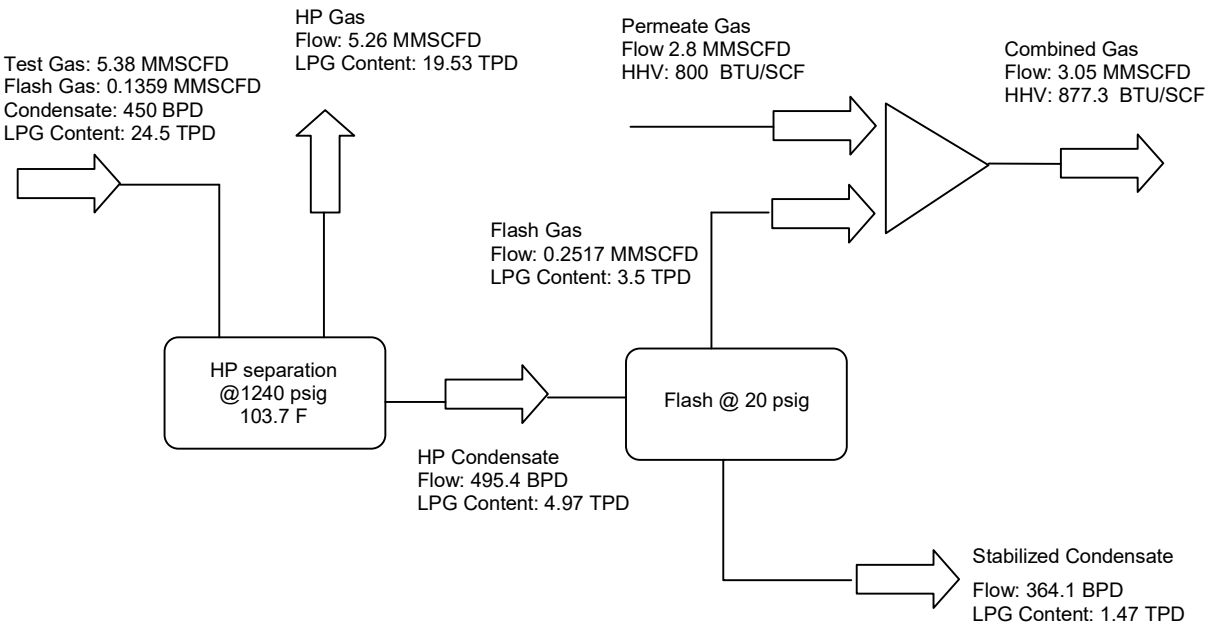

Figure 2: Schematic Representation for CASE-1A

3.2 FOR CASE-1B

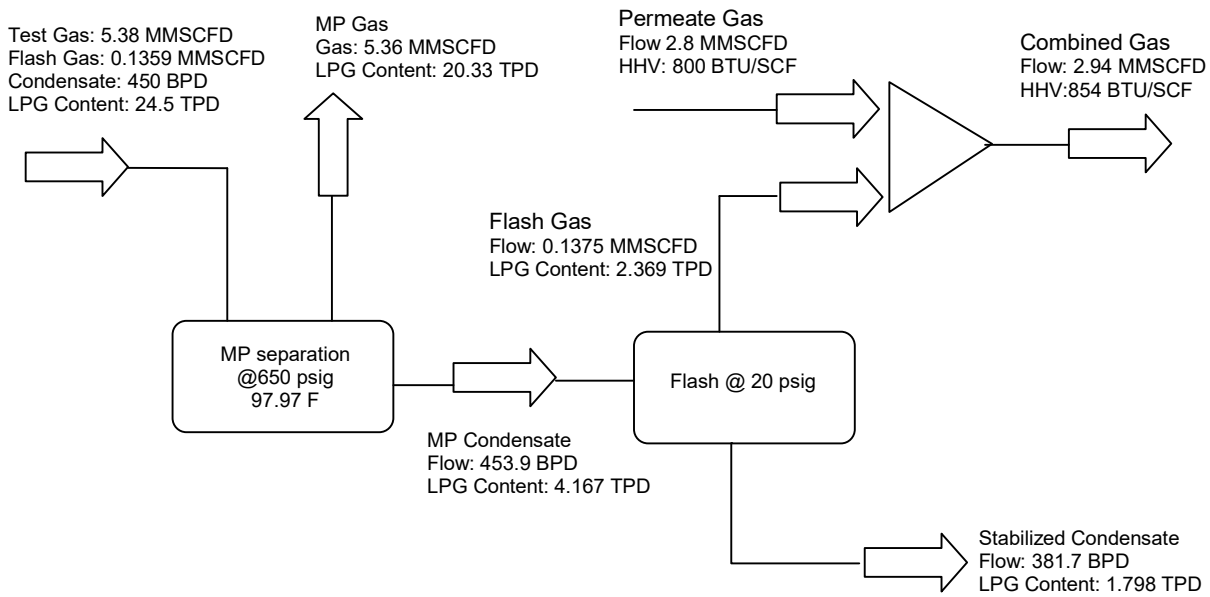

Figure 3: Schematic Representation for CASE-1B

3.3 FOR CASE-2A

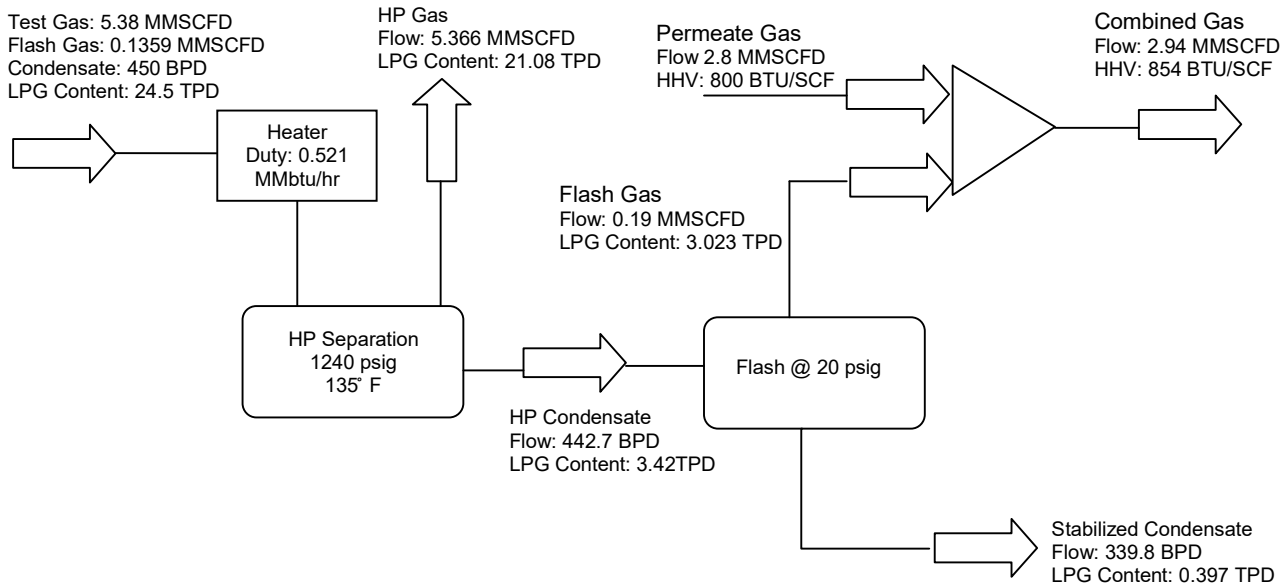

Figure 3: Schematic Representation for CASE-2A

3.4 FOR CASE-2B

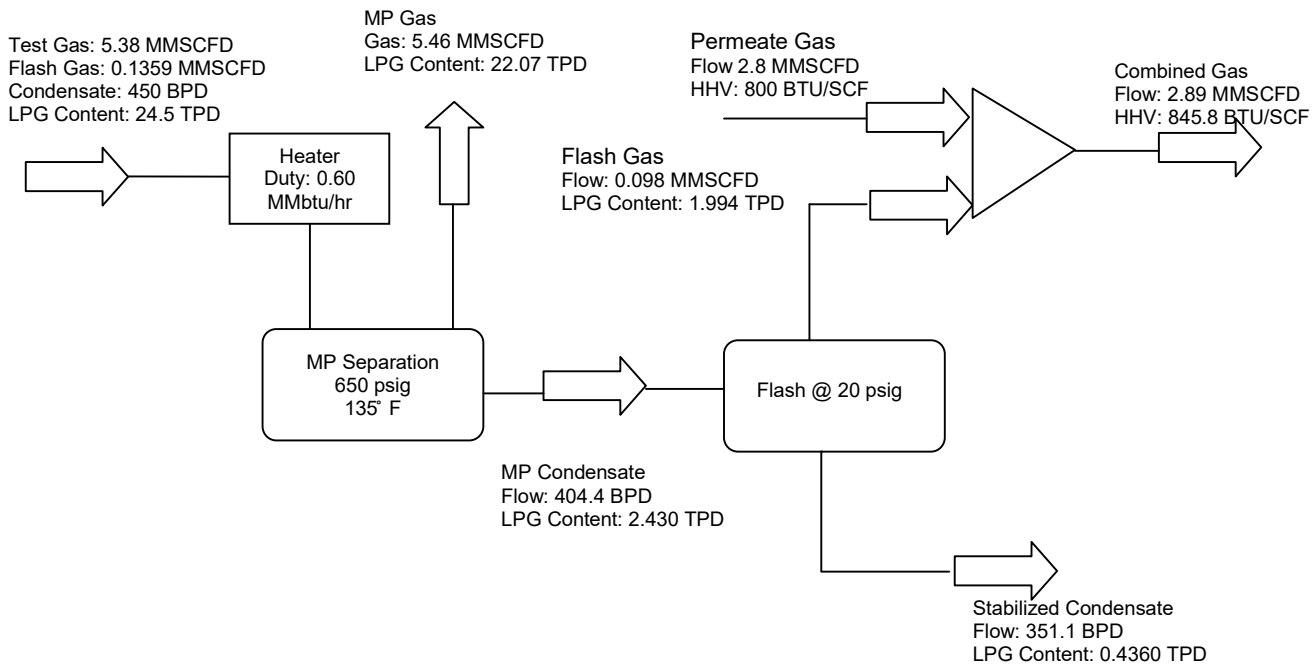

Figure 4: Schematic Representation for CASE-2B

3.5 FOR CASE-3A

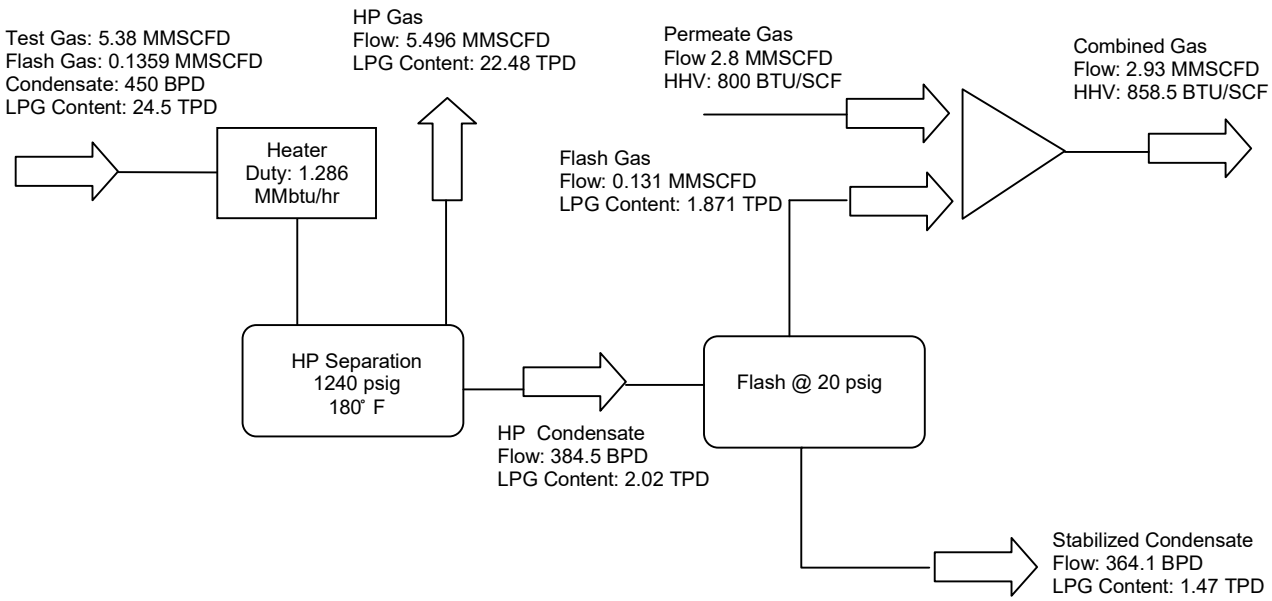

Figure 5: Schematic Representation for CASE-3A

3.6 FOR CASE-3B

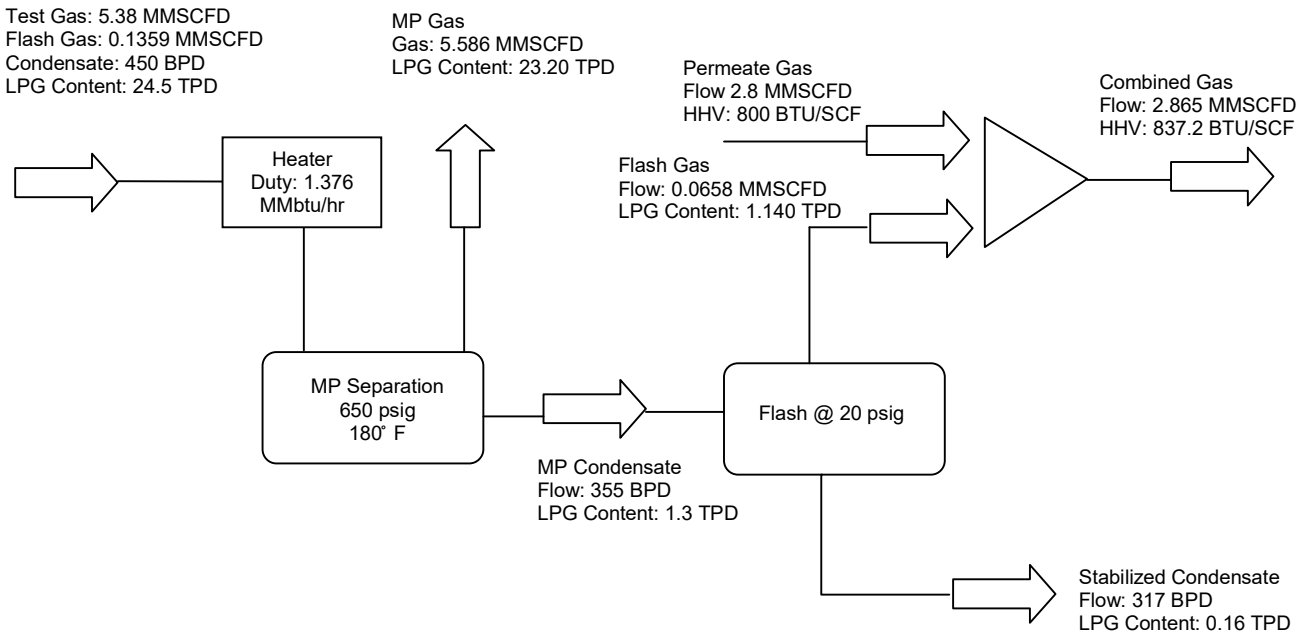

Figure 6: Schematic Representation for CASE-3B

4 RESULTS

Flash gas simulation carried out using condensate and gas analysis provided by OGDCL using computer-aided simulation.

Brief results of flash calculation for each case are presented below

PARAMETER	CASE-1A	CASE-1B	CASE-2A	CASE-2B	CASE-3A	CASE-3B
Feed Gas LPG Content (TPD)	24.5					
Separator Gas LPG Content (TPD)	19.53	20.33	21.08	22.07	22.48	23.20
Separator Condensate LPG Content (TPD)	4.97	4.167	3.42	2.43	2.02	1.3
Stabilizer Flash Gas LPG Content (TPD)	3.5	2.369	3.023	1.994	1.871	1.140
Stabilized Condensate LPG Content (TPD)	1.47	1.798	0.397	0.436	0.149	0.16
Percent LPG Recovery in Separator Gas	79.71%	82.97%	86.04%	90.08%	91.75%	94.6%
Percent LPG Slippage in Separator Condensate	20.29%	17.02%	13.96%	9.92%	8.25%	5.4%%
Combined H.H.V (BTU/SCF) with Permeate gas	877.3	854	869	845.8	858.5	837.2

5 CONCLUSION AND RECOMMENDATIONS

As per flash calculation simulation done by PEC, following are the conclusion and recommendations;

1. Considering the high pour point of condensate, heater is essential for smooth operations.
2. Although LPG recovery in Separator Gas increase in CASE -3 (installation of new line heater), but heater duty and its associated cost must be taken into account.
3. Currently flash gases from condensate separator (Tag# CZ-7011) is routed to flare, to utilize the heating value of flash gases from condensate separator, it shall be tie in with Membrane Permeate Gas.

   A separate study will be required for tie in of flash gases from condensate separator with Membrane Permeate Gas.

ANNEXURE-A

HP Separation @ 1240 psig without line heater

CASE-1A

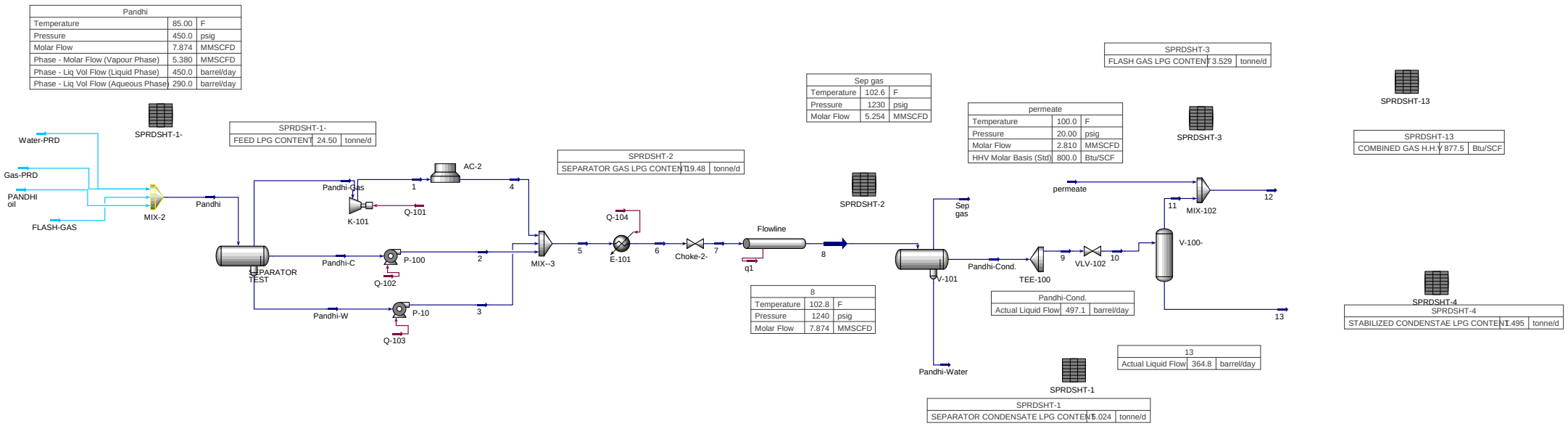
Pandhi
Temperature 85.00 F
Pressure 450.0 psig
Molar Flow 7.874 MMSCFD
Phase - Molar Flow (Vapour Phase) 5.380 MMSCFD
Phase - Liq Vol Flow (Liquid Phase) 450.0 barrel/day
Phase - Liq Vol Flow (Aqueous Phase) 290.0 barrel/day
SPRDSHT-1-
SPRDSHT-1-
FEED LPG CONTENT 24.50 tonne/d
Water-PRD
Gas-PRD
PANDHI oil
FLASH-GAS
MIX-2
Pandhi
SEPARATOR TEST
Pandhi-Gas
K-101
Q-101
AC-2
1
4
Pandhi-C
P-100
Q-102
2
Pandhi-W
P-10
Q-103
3
SPRDSHT-2
SEPARATOR GAS LPG CONTENT 19.48 tonne/d
MIX--3
5
Q-104
E-101
6
Choke-2-
7
Flowline
q1
8
Sep gas
Temperature 102.6 F
Pressure 1230 psig
Molar Flow 5.254 MMSCFD
SPRDSHT-2
8
Temperature 102.8 F
Pressure 1240 psig
Molar Flow 7.874 MMSCFD
Sep gas
V-101
Pandhi-Cond.
TEE-100
9
VLV-102
10
Pandhi-Cond.
Actual Liquid Flow 497.1 barrel/day
Pandhi-Water
SPRDSHT-1
SPRDSHT-1
SEPARATOR CONDENSATE LPG CONTENT 5.024 tonne/d
permeate
Temperature 100.0 F
Pressure 20.00 psig
Molar Flow 2.810 MMSCFD
HHV Molar Basis (Std) 800.0 Btu/SCF
SPRDSHT-3
SPRDSHT-3
FLASH GAS LPG CONTENT 3.529 tonne/d
permeate
11
MIX-102
12
V-100-
13
13
Actual Liquid Flow 364.8 barrel/day
SPRDSHT-13
SPRDSHT-13
COMBINED GAS H.H.V 877.5 Btu/SCF
SPRDSHT-4
SPRDSHT-4
STABILIZED CONDENSTAE LPG CONTENT 1.495 tonne/d

Petrochemical Engineering Consultants Karachi, Pakistan	Case Name:	CASE-1A.hsc	
	Unit Set:	NewUser5e	
	Date/Time:	Fri Mar 20 18:17:59 2020	

Material Stream: 1

Fluid Package: Basis-1

Property Package: Peng-Robinson

CONDITIONS

	Overall	Vapour Phase	Liquid Phase		
Vapour / Phase Fraction	0.9999	0.9999	0.0001		
Temperature: (F)	329.4	329.4	329.4		
Pressure: (psig)	2095 *	2095	2095		
Molar Flow (MMSCFD)	5.381	5.381	5.240e-004		
Mass Flow (tonne/d)	137.6	137.2	0.3260		
Std Ideal Liq Vol Flow (barrel/day)	2403	2401	1.982		
Molar Enthalpy (kJ/kgmole)	-8.389e+004	-8.380e+004	-9.628e+005		
Molar Entropy (kJ/kgmole-C)	162.4	162.3	1655		
Heat Flow (MMBtu/hr)	-21.31	-21.29	-2.382e-002		
Liq Vol Flow @Std Cond (barrel/day)	9.528e+005 *	9.528e+005	2.085		

PROPERTIES

	Overall	Vapour Phase	Liquid Phase		
Molecular Weight	21.39	21.34	520.4		
Molar Density (kgmole/m3)	4.261	4.261	1.702		
Mass Density (kg/m3)	91.12	90.93	885.8		
Act. Volume Flow (barrel/day)	9496	9493	2.315		
Mass Enthalpy (kJ/kg)	-3923	-3928	-1850		
Mass Entropy (kJ/kg-C)	7.595	7.606	3.180		
Heat Capacity (kJ/kgmole-C)	59.17	59.05	1275		
Mass Heat Capacity (kJ/kg-C)	2.767	2.768	2.450		
LHV Molar Basis (Std) (Btu/SCF)	---	---	---		
LHV Mass Basis (Std) (kJ/kg)	---	---	---		
Phase Fraction [Vol. Basis]	0.9992	0.9992	8.248e-004		
Phase Fraction [Mass Basis]	0.9976	0.9976	2.370e-003		
Partial Pressure of CO2 (psig)	57.20	---	---		
Cost Based on Flow (Cost/s)	0.0000	0.0000	0.0000		
Act. Gas Flow (ACT_m3/h)	62.89	62.89	---		
Avg. Liq. Density (kgmole/m3)	16.84	16.85	1.988		
Specific Heat (kJ/kgmole-C)	59.17	59.05	1275		
Std. Gas Flow (STD_m3/h)	6337	6337	0.6171		
Std. Ideal Liq. Mass Density (kg/m3)	360.1	359.5	1034		
Act. Liq. Flow (barrel/day)	2.315	---	2.315		
Z Factor	---	0.9365	2.344		
Watson K	17.28	17.29	11.39		
User Property	---	---	---		
Partial Pressure of H2S (psig)	-14.69	---	---		
Cp/(Cp - R)	1.163	1.164	1.007		
Cp/Cv	1.348	1.349	1.099		
Heat of Vap. (kJ/kgmole)	1.606e+004	---	---		
Kinematic Viscosity (cSt)	---	0.2123	19.72		
Liq. Mass Density (Std. Cond) (kg/m3)	0.9081	0.9060	983.5		
Liq. Vol. Flow (Std. Cond) (barrel/day)	9.528e+005	9.528e+005	2.085		
Liquid Fraction	9.738e-005	0.0000	1.000		
Molar Volume (m3/kgmole)	0.2347	0.2347	0.5875		
Mass Heat of Vap. (kJ/kg)	751.0	---	---		
Phase Fraction [Molar Basis]	0.9999	0.9999	0.0001		
Surface Tension (dyne/cm)	8.567	---	8.567		
Thermal Conductivity (W/m-K)	---	5.953e-002	8.973e-002		
Viscosity (cP)	---	1.930e-002	17.47		
Cv (Semi-Ideal) (kJ/kgmole-C)	50.86	50.74	1266		
Mass Cv (Semi-Ideal) (kJ/kg-C)	2.378	2.378	2.434		
Cv (kJ/kgmole-C)	43.89	43.77	1160		
Mass Cv (kJ/kg-C)	2.052	2.051	2.230		
Cv (Ent. Method) (kJ/kgmole-C)	43.91	43.79	1194		
Mass Cv (Ent. Method) (kJ/kg-C)	2.053	2.052	2.295		
Cp/Cv (Ent. Method)	1.348	1.349	1.068		

Licensed to: PETROCHEMICAL ENGINEERIN

* Specified by user.

Material Stream: 1 (continued)

Fluid Package: Basis-1
Property Package: Peng-Robinson

PROPERTIES

		Overall	Vapour Phase	Liquid Phase		
Reid VP at 37.8 C	(psig)	---	---	85.65		
True VP at 37.8 C	(psig)	3607	---	1991		
Liq. Vol. Flow - Sum(Std. Cond)	(barrel/day)	9.528e+005	9.528e+005	2.085		
HHV Molar Basis (Std)	(Btu/SCF)	---	---	---		
HHV Mass Basis (Std)	(kJ/kg)	---	---	---		
CO2 Loading		---	---	---		
CO2 App ML Con	(kgmole/m3)	---	---	4.386e-002		
CO2 App WT Con	(kgmol/kg)	---	---	4.951e-005		
Phase Fraction [Act. Vol. Basis]		0.9998	0.9998	2.438e-004		
Mass Exergy	(kJ/kg)	595.2	---	---		
Viscosity Index		---	---	---		
Ideal Gas Cp/Cv		1.195	1.196	1.007		
Ideal Gas Cp	(kJ/kgmole-C)	50.90	50.80	1127		
Mass Ideal Gas Cp	(kJ/kg-C)	2.380	2.381	2.166		
Bubble Point Pressure	(psig)	4369	---	---		

COMPOSITION

Overall Phase

Vapour Fraction 0.9999

COMPONENTS	MOLAR FLOW (kgmole/h)	MOLE FRACTION	MASS FLOW (tonne/d)	MASS FRACTION	LIQUID VOLUME FLOW (m3/h)	LIQUID VOLUME FRACTION
Methane	205.0219	0.7649	78.9395	0.5738	10.9860	0.6901
Ethane	27.6541	0.1032	19.9573	0.1451	2.3379	0.1469
Propane	13.5902	0.0507	14.3829	0.1046	1.1828	0.0743
i-Butane	1.5866	0.0059	2.2133	0.0161	0.1641	0.0103
n-Butane	2.8841	0.0108	4.0233	0.0292	0.2874	0.0181
i-Pentane	0.4635	0.0017	0.8025	0.0058	0.0536	0.0034
n-Pentane	0.4652	0.0017	0.8056	0.0059	0.0533	0.0033
n-Hexane	0.3694	0.0014	0.7639	0.0056	0.0480	0.0030
Nitrogen	5.5752	0.0208	3.7483	0.0272	0.1937	0.0122
CO2	9.1335	0.0341	9.6471	0.0701	0.4870	0.0306
H2S	0.0005	0.0000	0.0004	0.0000	0.0000	0.0000
H2O	0.3945	0.0015	0.1706	0.0012	0.0071	0.0004
NBP[1]95*	0.1425	0.0005	0.2323	0.0017	0.0142	0.0009
NBP[1]121*	0.1318	0.0005	0.2305	0.0017	0.0139	0.0009
NBP[1]147*	0.1254	0.0005	0.2414	0.0018	0.0144	0.0009
NBP[1]171*	0.1733	0.0006	0.3646	0.0027	0.0213	0.0013
NBP[1]195*	0.1579	0.0006	0.3546	0.0026	0.0205	0.0013
NBP[1]222*	0.0732	0.0003	0.1768	0.0013	0.0101	0.0006
NBP[1]248*	0.0375	0.0001	0.0974	0.0007	0.0055	0.0003
NBP[1]273*	0.0181	0.0001	0.0503	0.0004	0.0028	0.0002
NBP[1]299*	0.0083	0.0000	0.0245	0.0002	0.0014	0.0001
NBP[1]325*	0.0033	0.0000	0.0105	0.0001	0.0006	0.0000
NBP[1]351*	0.0015	0.0000	0.0050	0.0000	0.0003	0.0000
NBP[1]377*	0.0007	0.0000	0.0025	0.0000	0.0001	0.0000
NBP[1]402*	0.0003	0.0000	0.0013	0.0000	0.0001	0.0000
NBP[1]428*	0.0002	0.0000	0.0007	0.0000	0.0000	0.0000
NBP[1]454*	0.0001	0.0000	0.0003	0.0000	0.0000	0.0000
NBP[1]480*	0.0000	0.0000	0.0002	0.0000	0.0000	0.0000
NBP[1]505*	0.0000	0.0000	0.0001	0.0000	0.0000	0.0000
NBP[1]531*	0.0000	0.0000	0.0000	0.0000	0.0000	0.0000
NBP[1]557*	0.0000	0.0000	0.0000	0.0000	0.0000	0.0000
NBP[1]582*	0.0000	0.0000	0.0000	0.0000	0.0000	0.0000
NBP[1]608*	0.0000	0.0000	0.0000	0.0000	0.0000	0.0000
NBP[1]634*	0.0000	0.0000	0.0000	0.0000	0.0000	0.0000
NBP[1]659*	0.0000	0.0000	0.0000	0.0000	0.0000	0.0000
NBP[1]685*	0.0000	0.0000	0.0000	0.0000	0.0000	0.0000

* Specified by user.

Material Stream: 1 (continued)

Fluid Package: Basis-1
Property Package: Peng-Robinson

COMPOSITION

Overall Phase (continued)

Vapour Fraction 0.9999

COMPONENTS	MOLAR FLOW (kgmole/h)	MOLE FRACTION	MASS FLOW (tonne/d)	MASS FRACTION	LIQUID VOLUME FLOW (m3/h)	LIQUID VOLUME FRACTION
NBP[1]711*	0.0000	0.0000	0.0000	0.0000	0.0000	0.0000
NBP[1]736*	0.0000	0.0000	0.0000	0.0000	0.0000	0.0000
NBP[1]762*	0.0000	0.0000	0.0000	0.0000	0.0000	0.0000
NBP[1]788*	0.0000	0.0000	0.0000	0.0000	0.0000	0.0000
NBP[1]825*	0.0000	0.0000	0.0000	0.0000	0.0000	0.0000
NBP[1]873*	0.0000	0.0000	0.0000	0.0000	0.0000	0.0000
NBP[1]926*	0.0000	0.0000	0.0000	0.0000	0.0000	0.0000
NBP[1]978*	0.0000	0.0000	0.0000	0.0000	0.0000	0.0000
NBP[1]1021*	0.0000	0.0000	0.0000	0.0000	0.0000	0.0000
NBP[1]1075*	0.0000	0.0000	0.0000	0.0000	0.0000	0.0000
NBP[1]1123*	0.0000	0.0000	0.0000	0.0000	0.0000	0.0000
NBP[1]1173*	0.0000	0.0000	0.0000	0.0000	0.0000	0.0000
NBP[1]1250*	0.0000	0.0000	0.0000	0.0000	0.0000	0.0000
NBP[1]1339*	0.0000	0.0000	0.0000	0.0000	0.0000	0.0000
NBP[1]1432*	0.0000	0.0000	0.0000	0.0000	0.0000	0.0000
NBP[1]1528*	0.0000	0.0000	0.0000	0.0000	0.0000	0.0000
NBP[1]1637*	0.0000	0.0000	0.0000	0.0000	0.0000	0.0000
NBP[1]1732*	0.0000	0.0000	0.0000	0.0000	0.0000	0.0000
NBP[1]1819*	0.0001	0.0000	0.0029	0.0000	0.0001	0.0000
NBP[1]1913*	0.0112	0.0000	0.3148	0.0023	0.0121	0.0008
Total	268.0242	1.0000	137.5655	1.0000	15.9186	1.0000

Vapour Phase

Phase Fraction 0.9999

COMPONENTS	MOLAR FLOW (kgmole/h)	MOLE FRACTION	MASS FLOW (tonne/d)	MASS FRACTION	LIQUID VOLUME FLOW (m3/h)	LIQUID VOLUME FRACTION
Methane	205.0115	0.7650	78.9355	0.5752	10.9855	0.6907
Ethane	27.6523	0.1032	19.9561	0.1454	2.3378	0.1470
Propane	13.5892	0.0507	14.3819	0.1048	1.1827	0.0744
i-Butane	1.5865	0.0059	2.2131	0.0161	0.1641	0.0103
n-Butane	2.8838	0.0108	4.0229	0.0293	0.2874	0.0181
i-Pentane	0.4634	0.0017	0.8025	0.0058	0.0536	0.0034
n-Pentane	0.4652	0.0017	0.8055	0.0059	0.0533	0.0034
n-Hexane	0.3693	0.0014	0.7638	0.0056	0.0480	0.0030
Nitrogen	5.5749	0.0208	3.7481	0.0273	0.1937	0.0122
CO2	9.1329	0.0341	9.6464	0.0703	0.4870	0.0306
H2S	0.0005	0.0000	0.0004	0.0000	0.0000	0.0000
H2O	0.3944	0.0015	0.1705	0.0012	0.0071	0.0004
NBP[1]95*	0.1425	0.0005	0.2323	0.0017	0.0142	0.0009
NBP[1]121*	0.1318	0.0005	0.2305	0.0017	0.0139	0.0009
NBP[1]147*	0.1254	0.0005	0.2413	0.0018	0.0144	0.0009
NBP[1]171*	0.1732	0.0006	0.3645	0.0027	0.0213	0.0013
NBP[1]195*	0.1579	0.0006	0.3545	0.0026	0.0205	0.0013
NBP[1]222*	0.0732	0.0003	0.1768	0.0013	0.0101	0.0006
NBP[1]248*	0.0375	0.0001	0.0974	0.0007	0.0055	0.0003
NBP[1]273*	0.0181	0.0001	0.0503	0.0004	0.0028	0.0002
NBP[1]299*	0.0083	0.0000	0.0245	0.0002	0.0014	0.0001
NBP[1]325*	0.0033	0.0000	0.0105	0.0001	0.0006	0.0000
NBP[1]351*	0.0015	0.0000	0.0050	0.0000	0.0003	0.0000
NBP[1]377*	0.0007	0.0000	0.0025	0.0000	0.0001	0.0000
NBP[1]402*	0.0003	0.0000	0.0013	0.0000	0.0001	0.0000
NBP[1]428*	0.0002	0.0000	0.0007	0.0000	0.0000	0.0000
NBP[1]454*	0.0001	0.0000	0.0003	0.0000	0.0000	0.0000
NBP[1]480*	0.0000	0.0000	0.0002	0.0000	0.0000	0.0000
NBP[1]505*	0.0000	0.0000	0.0001	0.0000	0.0000	0.0000

* Specified by user.

Material Stream: 1 (continued)

Fluid Package: Basis-1
Property Package: Peng-Robinson

COMPOSITION

Vapour Phase (continued)

Phase Fraction 0.9999

COMPONENTS	MOLAR FLOW (kgmole/h)	MOLE FRACTION	MASS FLOW (tonne/d)	MASS FRACTION	LIQUID VOLUME FLOW (m3/h)	LIQUID VOLUME FRACTION
NBP[1]531*	0.0000	0.0000	0.0000	0.0000	0.0000	0.0000
NBP[1]557*	0.0000	0.0000	0.0000	0.0000	0.0000	0.0000
NBP[1]582*	0.0000	0.0000	0.0000	0.0000	0.0000	0.0000
NBP[1]608*	0.0000	0.0000	0.0000	0.0000	0.0000	0.0000
NBP[1]634*	0.0000	0.0000	0.0000	0.0000	0.0000	0.0000
NBP[1]659*	0.0000	0.0000	0.0000	0.0000	0.0000	0.0000
NBP[1]685*	0.0000	0.0000	0.0000	0.0000	0.0000	0.0000
NBP[1]711*	0.0000	0.0000	0.0000	0.0000	0.0000	0.0000
NBP[1]736*	0.0000	0.0000	0.0000	0.0000	0.0000	0.0000
NBP[1]762*	0.0000	0.0000	0.0000	0.0000	0.0000	0.0000
NBP[1]788*	0.0000	0.0000	0.0000	0.0000	0.0000	0.0000
NBP[1]825*	0.0000	0.0000	0.0000	0.0000	0.0000	0.0000
NBP[1]873*	0.0000	0.0000	0.0000	0.0000	0.0000	0.0000
NBP[1]926*	0.0000	0.0000	0.0000	0.0000	0.0000	0.0000
NBP[1]978*	0.0000	0.0000	0.0000	0.0000	0.0000	0.0000
NBP[1]1021*	0.0000	0.0000	0.0000	0.0000	0.0000	0.0000
NBP[1]1075*	0.0000	0.0000	0.0000	0.0000	0.0000	0.0000
NBP[1]1123*	0.0000	0.0000	0.0000	0.0000	0.0000	0.0000
NBP[1]1173*	0.0000	0.0000	0.0000	0.0000	0.0000	0.0000
NBP[1]1250*	0.0000	0.0000	0.0000	0.0000	0.0000	0.0000
NBP[1]1339*	0.0000	0.0000	0.0000	0.0000	0.0000	0.0000
NBP[1]1432*	0.0000	0.0000	0.0000	0.0000	0.0000	0.0000
NBP[1]1528*	0.0000	0.0000	0.0000	0.0000	0.0000	0.0000
NBP[1]1637*	0.0000	0.0000	0.0000	0.0000	0.0000	0.0000
NBP[1]1732*	0.0000	0.0000	0.0000	0.0000	0.0000	0.0000
NBP[1]1819*	0.0000	0.0000	0.0000	0.0000	0.0000	0.0000
NBP[1]1913*	0.0000	0.0000	0.0000	0.0000	0.0000	0.0000
Total	267.9981	1.0000	137.2395	1.0000	15.9054	1.0000

Liquid Phase

Phase Fraction 9.738e-005

COMPONENTS	MOLAR FLOW (kgmole/h)	MOLE FRACTION	MASS FLOW (tonne/d)	MASS FRACTION	LIQUID VOLUME FLOW (m3/h)	LIQUID VOLUME FRACTION
Methane	0.0104	0.3997	0.0040	0.0123	0.0006	0.0426
Ethane	0.0017	0.0659	0.0012	0.0038	0.0001	0.0111
Propane	0.0010	0.0387	0.0011	0.0033	0.0001	0.0067
i-Butane	0.0001	0.0053	0.0002	0.0006	0.0000	0.0011
n-Butane	0.0003	0.0100	0.0004	0.0011	0.0000	0.0020
i-Pentane	0.0000	0.0019	0.0001	0.0003	0.0000	0.0004
n-Pentane	0.0001	0.0020	0.0001	0.0003	0.0000	0.0004
n-Hexane	0.0000	0.0019	0.0001	0.0003	0.0000	0.0005
Nitrogen	0.0003	0.0108	0.0002	0.0006	0.0000	0.0007
CO2	0.0007	0.0258	0.0007	0.0022	0.0000	0.0027
H2S	0.0000	0.0000	0.0000	0.0000	0.0000	0.0000
H2O	0.0000	0.0011	0.0000	0.0000	0.0000	0.0000
NBP[1]95*	0.0000	0.0006	0.0000	0.0001	0.0000	0.0001
NBP[1]121*	0.0000	0.0006	0.0000	0.0001	0.0000	0.0001
NBP[1]147*	0.0000	0.0006	0.0000	0.0001	0.0000	0.0001
NBP[1]171*	0.0000	0.0009	0.0001	0.0002	0.0000	0.0002
NBP[1]195*	0.0000	0.0009	0.0001	0.0002	0.0000	0.0002
NBP[1]222*	0.0000	0.0005	0.0000	0.0001	0.0000	0.0001
NBP[1]248*	0.0000	0.0003	0.0000	0.0001	0.0000	0.0001
NBP[1]273*	0.0000	0.0001	0.0000	0.0000	0.0000	0.0000
NBP[1]299*	0.0000	0.0001	0.0000	0.0000	0.0000	0.0000
NBP[1]325*	0.0000	0.0000	0.0000	0.0000	0.0000	0.0000

* Specified by user.

Material Stream: 1 (continued)

Fluid Package: Basis-1
Property Package: Peng-Robinson

COMPOSITION

Liquid Phase (continued)

Phase Fraction 9.738e-005

COMPONENTS	MOLAR FLOW (kgmole/h)	MOLE FRACTION	MASS FLOW (tonne/d)	MASS FRACTION	LIQUID VOLUME FLOW (m3/h)	LIQUID VOLUME FRACTION
NBP[1]351*	0.0000	0.0000	0.0000	0.0000	0.0000	0.0000
NBP[1]377*	0.0000	0.0000	0.0000	0.0000	0.0000	0.0000
NBP[1]402*	0.0000	0.0000	0.0000	0.0000	0.0000	0.0000
NBP[1]428*	0.0000	0.0000	0.0000	0.0000	0.0000	0.0000
NBP[1]454*	0.0000	0.0000	0.0000	0.0000	0.0000	0.0000
NBP[1]480*	0.0000	0.0000	0.0000	0.0000	0.0000	0.0000
NBP[1]505*	0.0000	0.0000	0.0000	0.0000	0.0000	0.0000
NBP[1]531*	0.0000	0.0000	0.0000	0.0000	0.0000	0.0000
NBP[1]557*	0.0000	0.0000	0.0000	0.0000	0.0000	0.0000
NBP[1]582*	0.0000	0.0000	0.0000	0.0000	0.0000	0.0000
NBP[1]608*	0.0000	0.0000	0.0000	0.0000	0.0000	0.0000
NBP[1]634*	0.0000	0.0000	0.0000	0.0000	0.0000	0.0000
NBP[1]659*	0.0000	0.0000	0.0000	0.0000	0.0000	0.0000
NBP[1]685*	0.0000	0.0000	0.0000	0.0000	0.0000	0.0000
NBP[1]711*	0.0000	0.0000	0.0000	0.0000	0.0000	0.0000
NBP[1]736*	0.0000	0.0000	0.0000	0.0000	0.0000	0.0000
NBP[1]762*	0.0000	0.0000	0.0000	0.0000	0.0000	0.0000
NBP[1]788*	0.0000	0.0000	0.0000	0.0000	0.0000	0.0000
NBP[1]825*	0.0000	0.0000	0.0000	0.0000	0.0000	0.0000
NBP[1]873*	0.0000	0.0000	0.0000	0.0000	0.0000	0.0000
NBP[1]926*	0.0000	0.0000	0.0000	0.0000	0.0000	0.0000
NBP[1]978*	0.0000	0.0000	0.0000	0.0000	0.0000	0.0000
NBP[1]1021*	0.0000	0.0000	0.0000	0.0000	0.0000	0.0000
NBP[1]1075*	0.0000	0.0000	0.0000	0.0000	0.0000	0.0000
NBP[1]1123*	0.0000	0.0000	0.0000	0.0000	0.0000	0.0000
NBP[1]1173*	0.0000	0.0000	0.0000	0.0000	0.0000	0.0000
NBP[1]1250*	0.0000	0.0000	0.0000	0.0000	0.0000	0.0000
NBP[1]1339*	0.0000	0.0000	0.0000	0.0000	0.0000	0.0000
NBP[1]1432*	0.0000	0.0000	0.0000	0.0000	0.0000	0.0000
NBP[1]1528*	0.0000	0.0000	0.0000	0.0000	0.0000	0.0000
NBP[1]1637*	0.0000	0.0000	0.0000	0.0000	0.0000	0.0000
NBP[1]1732*	0.0000	0.0000	0.0000	0.0000	0.0000	0.0000
NBP[1]1819*	0.0001	0.0041	0.0029	0.0088	0.0001	0.0085
NBP[1]1913*	0.0112	0.4282	0.3148	0.9656	0.0121	0.9220
Total	0.0261	1.0000	0.3260	1.0000	0.0131	1.0000

Material Stream: 2

Fluid Package: Basis-1
Property Package: Peng-Robinson

CONDITIONS

		Overall	Liquid Phase	Liquid Phase		
Vapour / Phase Fraction		0.0000	0.0170	0.9830		
Temperature:	(F)	95.88	95.88	95.88		
Pressure:	(psig)	2090 *	2090	2090		
Molar Flow	(MMSCFD)	0.3574	6.079e-003	0.3513		
Mass Flow	(tonne/d)	53.98	3.654	50.33		
Std Ideal Liq Vol Flow	(barrel/day)	449.3	23.56	425.8		
Molar Enthalpy	(kJ/kgmole)	-2.850e+005	-1.060e+006	-2.716e+005		
Molar Entropy	(kJ/kgmole-C)	220.4	1098	205.3		
Heat Flow	(MMBtu/hr)	-4.808	-0.3044	-4.504		
Liq Vol Flow @Std Cond	(barrel/day)	434.3 *	23.73	410.6		

* Specified by user.

Material Stream: 2 (continued)

Fluid Package: Basis-1
Property Package: Peng-Robinson

PROPERTIES

		Overall	Liquid Phase	Liquid Phase		
Molecular Weight		126.4	502.8	119.8		
Molar Density	(kgmole/m3)	6.147	1.922	6.390		
Mass Density	(kg/m3)	776.7	966.5	765.7		
Act. Volume Flow	(barrel/day)	437.2	23.78	413.4		
Mass Enthalpy	(kJ/kg)	-2255	-2109	-2266		
Mass Entropy	(kJ/kg-C)	1.745	2.183	1.713		
Heat Capacity	(kJ/kgmole-C)	255.7	961.1	243.5		
Mass Heat Capacity	(kJ/kg-C)	2.024	1.911	2.032		
LHV Molar Basis (Std)	(Btu/SCF)	---	---	---		
LHV Mass Basis (Std)	(kJ/kg)	---	---	---		
Phase Fraction [Vol. Basis]		0.0000	5.243e-002	0.9476		
Phase Fraction [Mass Basis]		0.0000	6.769e-002	0.9323		
Partial Pressure of CO2	(psig)	-14.70	---	---		
Cost Based on Flow	(Cost/s)	0.0000	0.0000	0.0000		
Act. Gas Flow	(ACT_m3/h)	---	---	---		
Avg. Liq. Density	(kgmole/m3)	5.980	1.940	6.204		
Specific Heat	(kJ/kgmole-C)	255.7	961.1	243.5		
Std. Gas Flow	(STD_m3/h)	420.9	7.159	413.7		
Std. Ideal Liq. Mass Density	(kg/m3)	755.6	975.6	743.5		
Act. Liq. Flow	(barrel/day)	437.2	23.78	413.4		
Z Factor		---	2.942	0.8850		
Watson K		11.99	11.67	12.06		
User Property		---	---	---		
Partial Pressure of H2S	(psig)	-14.70	---	---		
Cp/(Cp - R)		1.034	1.009	1.035		
Cp/Cv		1.202	1.103	1.210		
Heat of Vap.	(kJ/kgmole)	---	---	---		
Kinematic Viscosity	(cSt)	1.244	537.4	1.048		
Liq. Mass Density (Std. Cond)	(kg/m3)	781.8	968.5	771.0		
Liq. Vol. Flow (Std. Cond)	(barrel/day)	434.3	23.73	410.6		
Liquid Fraction		1.000	1.000	1.000		
Molar Volume	(m3/kgmole)	0.1627	0.5203	0.1565		
Mass Heat of Vap.	(kJ/kg)	---	---	---		
Phase Fraction [Molar Basis]		0.0000	0.0170	0.9830		
Surface Tension	(dyne/cm)	---	20.30	15.38		
Thermal Conductivity	(W/m-K)	9.974e-002	0.1174	9.881e-002		
Viscosity	(cP)	1.244	519.4	0.8029		
Cv (Semi-Ideal)	(kJ/kgmole-C)	247.4	952.7	---		
Mass Cv (Semi-Ideal)	(kJ/kg-C)	1.958	1.895	---		
Cv	(kJ/kgmole-C)	212.7	871.2	---		
Mass Cv	(kJ/kg-C)	1.683	1.733	---		
Cv (Ent. Method)	(kJ/kgmole-C)	---	---	---		
Mass Cv (Ent. Method)	(kJ/kg-C)	---	---	---		
Cp/Cv (Ent. Method)		---	---	---		
Reid VP at 37.8 C	(psig)	97.87	26.74	100.9		
True VP at 37.8 C	(psig)	475.9	449.8	497.6		
Liq. Vol. Flow - Sum(Std. Cond)	(barrel/day)	23.73	23.73	0.0000		
HHV Molar Basis (Std)	(Btu/SCF)	---	---	---		
HHV Mass Basis (Std)	(kJ/kg)	---	---	---		
CO2 Loading		---	---	---		
CO2 App ML Con	(kgmole/m3)	8.263e-002	2.756e-002	8.580e-002		
CO2 App WT Con	(kgmol/kg)	1.064e-004	2.851e-005	1.120e-004		
Phase Fraction [Act. Vol. Basis]		0.0000	5.440e-002	0.9456		
Mass Exergy	(kJ/kg)	35.50	---	---		
Viscosity Index		32.55	---	---		
Ideal Gas Cp/Cv		1.043	1.010	1.045		
Ideal Gas Cp	(kJ/kgmole-C)	203.6	802.7	193.3		

* Specified by user.

Material Stream: 2 (continued)

Fluid Package: Basis-1
Property Package: Peng-Robinson

PROPERTIES

		Overall	Liquid Phase	Liquid Phase		
Mass Ideal Gas Cp	(kJ/kg-C)	1.612	1.596	1.613		
Bubble Point Pressure	(psig)	467.5	---	---		

COMPOSITION

Overall Phase

Vapour Fraction 0.0000

COMPONENTS	MOLAR FLOW (kgmole/h)	MOLE FRACTION	MASS FLOW (tonne/d)	MASS FRACTION	LIQUID VOLUME FLOW (m3/h)	LIQUID VOLUME FRACTION
Methane	2.0221	0.1136	0.7786	0.0144	0.1084	0.0364
Ethane	1.1465	0.0644	0.8274	0.0153	0.0969	0.0326
Propane	1.6775	0.0942	1.7753	0.0329	0.1460	0.0490
i-Butane	0.4420	0.0248	0.6166	0.0114	0.0457	0.0154
n-Butane	1.0672	0.0600	1.4887	0.0276	0.1064	0.0357
i-Pentane	0.3860	0.0217	0.6684	0.0124	0.0447	0.0150
n-Pentane	0.4950	0.0278	0.8571	0.0159	0.0567	0.0191
n-Hexane	1.1004	0.0618	2.2760	0.0422	0.1431	0.0481
Nitrogen	0.0228	0.0013	0.0153	0.0003	0.0008	0.0003
CO2	0.2393	0.0134	0.2527	0.0047	0.0128	0.0043
H2S	0.0000	0.0000	0.0000	0.0000	0.0000	0.0000
H2O	0.0107	0.0006	0.0046	0.0001	0.0002	0.0001
NBP[1]95*	0.1457	0.0082	0.2376	0.0044	0.0146	0.0049
NBP[1]121*	0.2063	0.0116	0.3606	0.0067	0.0218	0.0073
NBP[1]147*	0.3061	0.0172	0.5891	0.0109	0.0350	0.0118
NBP[1]171*	0.6492	0.0365	1.3660	0.0253	0.0800	0.0269
NBP[1]195*	0.9179	0.0516	2.0614	0.0382	0.1193	0.0401
NBP[1]222*	0.7271	0.0408	1.7563	0.0325	0.1004	0.0337
NBP[1]248*	0.6282	0.0353	1.6313	0.0302	0.0921	0.0309
NBP[1]273*	0.5177	0.0291	1.4378	0.0266	0.0803	0.0270
NBP[1]299*	0.4103	0.0230	1.2148	0.0225	0.0671	0.0225
NBP[1]325*	0.2995	0.0168	0.9422	0.0175	0.0515	0.0173
NBP[1]351*	0.2442	0.0137	0.8165	0.0151	0.0442	0.0148
NBP[1]377*	0.2240	0.0126	0.7989	0.0148	0.0428	0.0144
NBP[1]402*	0.2058	0.0116	0.7826	0.0145	0.0415	0.0139
NBP[1]428*	0.1959	0.0110	0.7949	0.0147	0.0417	0.0140
NBP[1]454*	0.1955	0.0110	0.8477	0.0157	0.0441	0.0148
NBP[1]480*	0.1981	0.0111	0.9180	0.0170	0.0473	0.0159
NBP[1]505*	0.1920	0.0108	0.9483	0.0176	0.0484	0.0162
NBP[1]531*	0.1852	0.0104	0.9740	0.0180	0.0492	0.0165
NBP[1]557*	0.1784	0.0100	0.9978	0.0185	0.0500	0.0168
NBP[1]582*	0.1706	0.0096	1.0132	0.0188	0.0503	0.0169
NBP[1]608*	0.1643	0.0092	1.0351	0.0192	0.0510	0.0171
NBP[1]634*	0.1611	0.0090	1.0753	0.0199	0.0526	0.0177
NBP[1]659*	0.1586	0.0089	1.1194	0.0207	0.0543	0.0182
NBP[1]685*	0.1641	0.0092	1.2227	0.0227	0.0588	0.0198
NBP[1]711*	0.1715	0.0096	1.3445	0.0249	0.0642	0.0216
NBP[1]736*	0.1697	0.0095	1.3915	0.0258	0.0659	0.0221
NBP[1]762*	0.1653	0.0093	1.4214	0.0263	0.0669	0.0225
NBP[1]788*	0.1585	0.0089	1.4424	0.0267	0.0674	0.0226
NBP[1]825*	0.2655	0.0149	2.5963	0.0481	0.1201	0.0404
NBP[1]873*	0.1830	0.0103	1.9404	0.0359	0.0887	0.0298
NBP[1]926*	0.1437	0.0081	1.6472	0.0305	0.0744	0.0250
NBP[1]978*	0.1474	0.0083	1.8524	0.0343	0.0825	0.0277
NBP[1]1021*	0.0728	0.0041	0.9655	0.0179	0.0426	0.0143
NBP[1]1075*	0.0449	0.0025	0.6310	0.0117	0.0276	0.0093
NBP[1]1123*	0.0417	0.0023	0.6267	0.0116	0.0271	0.0091
NBP[1]1173*	0.0300	0.0017	0.4772	0.0088	0.0205	0.0069
NBP[1]1250*	0.0393	0.0022	0.6767	0.0125	0.0287	0.0096

* Specified by user.

Material Stream: 2 (continued)

Fluid Package: Basis-1
Property Package: Peng-Robinson

COMPOSITION

Overall Phase (continued)

Vapour Fraction 0.0000

COMPONENTS	MOLAR FLOW (kgmole/h)	MOLE FRACTION	MASS FLOW (tonne/d)	MASS FRACTION	LIQUID VOLUME FLOW (m3/h)	LIQUID VOLUME FRACTION
NBP[1]1339*	0.0364	0.0020	0.6999	0.0130	0.0291	0.0098
NBP[1]1432*	0.0257	0.0014	0.5397	0.0100	0.0221	0.0074
NBP[1]1528*	0.0180	0.0010	0.4082	0.0076	0.0165	0.0055
NBP[1]1637*	0.0127	0.0007	0.3047	0.0056	0.0122	0.0041
NBP[1]1732*	0.0101	0.0006	0.2565	0.0048	0.0101	0.0034
NBP[1]1819*	0.0096	0.0005	0.2561	0.0047	0.0100	0.0034
NBP[1]1913*	0.0000	0.0000	0.0000	0.0000	0.0000	0.0000
Total	17.8012	1.0000	53.9808	1.0000	2.9766	1.0000

Liquid Phase

Phase Fraction 1.701e-002

COMPONENTS	MOLAR FLOW (kgmole/h)	MOLE FRACTION	MASS FLOW (tonne/d)	MASS FRACTION	LIQUID VOLUME FLOW (m3/h)	LIQUID VOLUME FRACTION
Methane	0.0348	0.1150	0.0134	0.0037	0.0019	0.0120
Ethane	0.0134	0.0442	0.0097	0.0026	0.0011	0.0073
Propane	0.0157	0.0517	0.0166	0.0045	0.0014	0.0087
i-Butane	0.0037	0.0124	0.0052	0.0014	0.0004	0.0025
n-Butane	0.0082	0.0271	0.0114	0.0031	0.0008	0.0052
i-Pentane	0.0027	0.0090	0.0047	0.0013	0.0003	0.0020
n-Pentane	0.0033	0.0108	0.0057	0.0015	0.0004	0.0024
n-Hexane	0.0064	0.0212	0.0133	0.0036	0.0008	0.0054
Nitrogen	0.0006	0.0021	0.0004	0.0001	0.0000	0.0001
CO2	0.0043	0.0143	0.0046	0.0013	0.0002	0.0015
H2S	0.0000	0.0000	0.0000	0.0000	0.0000	0.0000
H2O	0.0002	0.0006	0.0001	0.0000	0.0000	0.0000
NBP[1]95*	0.0009	0.0031	0.0015	0.0004	0.0001	0.0006
NBP[1]121*	0.0012	0.0041	0.0022	0.0006	0.0001	0.0008
NBP[1]147*	0.0017	0.0057	0.0033	0.0009	0.0002	0.0013
NBP[1]171*	0.0034	0.0113	0.0072	0.0020	0.0004	0.0027
NBP[1]195*	0.0046	0.0151	0.0103	0.0028	0.0006	0.0038
NBP[1]222*	0.0034	0.0114	0.0083	0.0023	0.0005	0.0030
NBP[1]248*	0.0028	0.0094	0.0074	0.0020	0.0004	0.0027
NBP[1]273*	0.0022	0.0074	0.0062	0.0017	0.0003	0.0022
NBP[1]299*	0.0017	0.0056	0.0050	0.0014	0.0003	0.0018
NBP[1]325*	0.0012	0.0040	0.0038	0.0010	0.0002	0.0013
NBP[1]351*	0.0009	0.0031	0.0032	0.0009	0.0002	0.0011
NBP[1]377*	0.0008	0.0028	0.0030	0.0008	0.0002	0.0010
NBP[1]402*	0.0007	0.0025	0.0028	0.0008	0.0002	0.0010
NBP[1]428*	0.0007	0.0023	0.0028	0.0008	0.0001	0.0009
NBP[1]454*	0.0007	0.0022	0.0029	0.0008	0.0002	0.0010
NBP[1]480*	0.0007	0.0022	0.0031	0.0008	0.0002	0.0010
NBP[1]505*	0.0006	0.0021	0.0031	0.0009	0.0002	0.0010
NBP[1]531*	0.0006	0.0020	0.0032	0.0009	0.0002	0.0010
NBP[1]557*	0.0006	0.0019	0.0032	0.0009	0.0002	0.0010
NBP[1]582*	0.0006	0.0018	0.0033	0.0009	0.0002	0.0010
NBP[1]608*	0.0005	0.0018	0.0034	0.0009	0.0002	0.0011
NBP[1]634*	0.0005	0.0018	0.0036	0.0010	0.0002	0.0011
NBP[1]659*	0.0005	0.0018	0.0038	0.0010	0.0002	0.0012
NBP[1]685*	0.0006	0.0019	0.0043	0.0012	0.0002	0.0013
NBP[1]711*	0.0006	0.0020	0.0049	0.0013	0.0002	0.0015
NBP[1]736*	0.0006	0.0021	0.0053	0.0015	0.0003	0.0016
NBP[1]762*	0.0007	0.0022	0.0058	0.0016	0.0003	0.0018
NBP[1]788*	0.0007	0.0023	0.0065	0.0018	0.0003	0.0019
NBP[1]825*	0.0014	0.0046	0.0137	0.0037	0.0006	0.0041
NBP[1]873*	0.0013	0.0043	0.0137	0.0037	0.0006	0.0040

* Specified by user.

Material Stream: 2 (continued)

Fluid Package: Basis-1
Property Package: Peng-Robinson

COMPOSITION

Liquid Phase (continued)

Phase Fraction 1.701e-002

COMPONENTS	MOLAR FLOW (kgmole/h)	MOLE FRACTION	MASS FLOW (tonne/d)	MASS FRACTION	LIQUID VOLUME FLOW (m3/h)	LIQUID VOLUME FRACTION
NBP[1]926*	0.0015	0.0051	0.0177	0.0048	0.0008	0.0051
NBP[1]978*	0.0024	0.0080	0.0303	0.0083	0.0014	0.0087
NBP[1]1021*	0.0021	0.0068	0.0273	0.0075	0.0012	0.0077
NBP[1]1075*	0.0030	0.0098	0.0418	0.0114	0.0018	0.0117
NBP[1]1123*	0.0060	0.0198	0.0902	0.0247	0.0039	0.0250
NBP[1]1173*	0.0108	0.0355	0.1711	0.0468	0.0073	0.0470
NBP[1]1250*	0.0337	0.1112	0.5795	0.1586	0.0246	0.1574
NBP[1]1339*	0.0361	0.1194	0.6954	0.1903	0.0290	0.1855
NBP[1]1432*	0.0257	0.0848	0.5397	0.1477	0.0221	0.1418
NBP[1]1528*	0.0180	0.0595	0.4082	0.1117	0.0165	0.1059
NBP[1]1637*	0.0127	0.0418	0.3047	0.0834	0.0122	0.0780
NBP[1]1732*	0.0101	0.0334	0.2565	0.0702	0.0101	0.0650
NBP[1]1819*	0.0096	0.0318	0.2561	0.0701	0.0100	0.0641
NBP[1]1913*	0.0000	0.0000	0.0000	0.0000	0.0000	0.0000
Total	0.3028	1.0000	3.6542	1.0000	0.1561	1.0000

Liquid Phase

Phase Fraction 0.9830

COMPONENTS	MOLAR FLOW (kgmole/h)	MOLE FRACTION	MASS FLOW (tonne/d)	MASS FRACTION	LIQUID VOLUME FLOW (m3/h)	LIQUID VOLUME FRACTION
Methane	1.9873	0.1136	0.7652	0.0152	0.1065	0.0378
Ethane	1.1332	0.0648	0.8178	0.0162	0.0958	0.0340
Propane	1.6618	0.0950	1.7588	0.0349	0.1446	0.0513
i-Butane	0.4383	0.0250	0.6114	0.0121	0.0453	0.0161
n-Butane	1.0590	0.0605	1.4773	0.0294	0.1055	0.0374
i-Pentane	0.3833	0.0219	0.6637	0.0132	0.0444	0.0157
n-Pentane	0.4917	0.0281	0.8515	0.0169	0.0563	0.0200
n-Hexane	1.0940	0.0625	2.2627	0.0450	0.1423	0.0504
Nitrogen	0.0222	0.0013	0.0149	0.0003	0.0008	0.0003
CO2	0.2349	0.0134	0.2482	0.0049	0.0125	0.0044
H2S	0.0000	0.0000	0.0000	0.0000	0.0000	0.0000
H2O	0.0105	0.0006	0.0045	0.0001	0.0002	0.0001
NBP[1]95*	0.1448	0.0083	0.2360	0.0047	0.0145	0.0051
NBP[1]121*	0.2050	0.0117	0.3585	0.0071	0.0217	0.0077
NBP[1]147*	0.3043	0.0174	0.5858	0.0116	0.0348	0.0123
NBP[1]171*	0.6458	0.0369	1.3588	0.0270	0.0795	0.0282
NBP[1]195*	0.9133	0.0522	2.0511	0.0408	0.1187	0.0421
NBP[1]222*	0.7237	0.0414	1.7480	0.0347	0.0999	0.0354
NBP[1]248*	0.6253	0.0357	1.6240	0.0323	0.0917	0.0325
NBP[1]273*	0.5155	0.0295	1.4316	0.0284	0.0799	0.0283
NBP[1]299*	0.4085	0.0233	1.2098	0.0240	0.0668	0.0237
NBP[1]325*	0.2983	0.0170	0.9385	0.0186	0.0513	0.0182
NBP[1]351*	0.2432	0.0139	0.8133	0.0162	0.0440	0.0156
NBP[1]377*	0.2232	0.0128	0.7959	0.0158	0.0426	0.0151
NBP[1]402*	0.2050	0.0117	0.7797	0.0155	0.0414	0.0147
NBP[1]428*	0.1952	0.0112	0.7921	0.0157	0.0416	0.0147
NBP[1]454*	0.1948	0.0111	0.8447	0.0168	0.0439	0.0156
NBP[1]480*	0.1975	0.0113	0.9149	0.0182	0.0471	0.0167
NBP[1]505*	0.1913	0.0109	0.9451	0.0188	0.0482	0.0171
NBP[1]531*	0.1846	0.0106	0.9708	0.0193	0.0491	0.0174
NBP[1]557*	0.1778	0.0102	0.9946	0.0198	0.0498	0.0177
NBP[1]582*	0.1700	0.0097	1.0099	0.0201	0.0502	0.0178
NBP[1]608*	0.1637	0.0094	1.0317	0.0205	0.0508	0.0180
NBP[1]634*	0.1606	0.0092	1.0718	0.0213	0.0524	0.0186
NBP[1]659*	0.1581	0.0090	1.1156	0.0222	0.0541	0.0192

* Specified by user.

Material Stream: 2 (continued)

Fluid Package: Basis-1
Property Package: Peng-Robinson

COMPOSITION

Liquid Phase (continued)

Phase Fraction 0.9830

COMPONENTS	MOLAR FLOW (kgmole/h)	MOLE FRACTION	MASS FLOW (tonne/d)	MASS FRACTION	LIQUID VOLUME FLOW (m3/h)	LIQUID VOLUME FRACTION
NBP[1]685*	0.1635	0.0093	1.2185	0.0242	0.0586	0.0208
NBP[1]711*	0.1709	0.0098	1.3396	0.0266	0.0639	0.0227
NBP[1]736*	0.1691	0.0097	1.3862	0.0275	0.0657	0.0233
NBP[1]762*	0.1646	0.0094	1.4156	0.0281	0.0666	0.0236
NBP[1]788*	0.1578	0.0090	1.4359	0.0285	0.0671	0.0238
NBP[1]825*	0.2641	0.0151	2.5826	0.0513	0.1195	0.0424
NBP[1]873*	0.1817	0.0104	1.9267	0.0383	0.0881	0.0312
NBP[1]926*	0.1422	0.0081	1.6295	0.0324	0.0736	0.0261
NBP[1]978*	0.1449	0.0083	1.8221	0.0362	0.0811	0.0288
NBP[1]1021*	0.0708	0.0040	0.9382	0.0186	0.0414	0.0147
NBP[1]1075*	0.0419	0.0024	0.5892	0.0117	0.0258	0.0091
NBP[1]1123*	0.0357	0.0020	0.5365	0.0107	0.0232	0.0082
NBP[1]1173*	0.0192	0.0011	0.3061	0.0061	0.0131	0.0047
NBP[1]1250*	0.0056	0.0003	0.0972	0.0019	0.0041	0.0015
NBP[1]1339*	0.0002	0.0000	0.0045	0.0001	0.0002	0.0001
NBP[1]1432*	0.0000	0.0000	0.0000	0.0000	0.0000	0.0000
NBP[1]1528*	0.0000	0.0000	0.0000	0.0000	0.0000	0.0000
NBP[1]1637*	0.0000	0.0000	0.0000	0.0000	0.0000	0.0000
NBP[1]1732*	0.0000	0.0000	0.0000	0.0000	0.0000	0.0000
NBP[1]1819*	0.0000	0.0000	0.0000	0.0000	0.0000	0.0000
NBP[1]1913*	0.0000	0.0000	0.0000	0.0000	0.0000	0.0000
Total	17.4984	1.0000	50.3266	1.0000	2.8205	1.0000

Material Stream: 3

Fluid Package: Basis-1
Property Package: Peng-Robinson

CONDITIONS

		Overall	Aqueous Phase
Vapour / Phase Fraction		0.0000	1.0000
Temperature:	(F)	86.60	86.60
Pressure:	(psig)	2090 *	2090
Molar Flow	(MMSCFD)	2.135	2.135
Mass Flow	(tonne/d)	46.00	46.00
Std Ideal Liq Vol Flow	(barrel/day)	290.0	290.0
Molar Enthalpy	(kJ/kgmole)	-2.856e+005	-2.856e+005
Molar Entropy	(kJ/kgmole-C)	54.92	54.92
Heat Flow	(MMBtu/hr)	-28.79	-28.79
Liq Vol Flow @Std Cond	(barrel/day)	285.1 *	285.1

PROPERTIES

		Overall	Aqueous Phase
Molecular Weight		18.03	18.03
Molar Density	(kgmole/m3)	55.91	55.91
Mass Density	(kg/m3)	1008	1008
Act. Volume Flow	(barrel/day)	287.1	287.1
Mass Enthalpy	(kJ/kg)	-1.584e+004	-1.584e+004
Mass Entropy	(kJ/kg-C)	3.047	3.047
Heat Capacity	(kJ/kgmole-C)	77.42	77.42
Mass Heat Capacity	(kJ/kg-C)	4.295	4.295
LHV Molar Basis (Std)	(Btu/SCF)	1.809e-004	1.809e-004
LHV Mass Basis (Std)	(kJ/kg)	8.858e-003	8.858e-003
Phase Fraction [Vol. Basis]		0.0000	1.000
Phase Fraction [Mass Basis]		0.0000	1.000
Partial Pressure of CO2	(psig)	-14.70	---

* Specified by user.

Material Stream: 3 (continued)

Fluid Package: Basis-1
Property Package: Peng-Robinson

PROPERTIES

	Overall	Aqueous Phase
Cost Based on Flow (Cost/s)	0.0000	0.0000
Act. Gas Flow (ACT_m3/h)	---	---
Avg. Liq. Density (kgmole/m3)	55.35	55.35
Specific Heat (kJ/kgmole-C)	77.42	77.42
Std. Gas Flow (STD_m3/h)	2514	2514
Std. Ideal Liq. Mass Density (kg/m3)	997.8	997.8
Act. Liq. Flow (barrel/day)	287.1	287.1
Z Factor	0.1029	0.1029
Watson K	8.497	8.497
User Property	---	---
Partial Pressure of H2S (psig)	-14.70	---
Cp/(Cp - R)	1.120	1.120
Cp/Cv	1.148	1.148
Heat of Vap. (kJ/kgmole)	1.881e+004	---
Kinematic Viscosity (cSt)	0.7854	0.7854
Liq. Mass Density (Std. Cond) (kg/m3)	1015	1015
Liq. Vol. Flow (Std. Cond) (barrel/day)	285.1	285.1
Liquid Fraction	1.000	1.000
Molar Volume (m3/kgmole)	1.789e-002	1.789e-002
Mass Heat of Vap. (kJ/kg)	1044	---
Phase Fraction [Molar Basis]	0.0000	1.0000
Surface Tension (dyne/cm)	71.15	71.15
Thermal Conductivity (W/m-K)	0.6187	0.6187
Viscosity (cP)	0.7916	0.7916
Cv (Semi-Ideal) (kJ/kgmole-C)	69.10	69.10
Mass Cv (Semi-Ideal) (kJ/kg-C)	3.834	3.834
Cv (kJ/kgmole-C)	67.44	67.44
Mass Cv (kJ/kg-C)	3.741	3.741
Cv (Ent. Method) (kJ/kgmole-C)	66.91	66.91
Mass Cv (Ent. Method) (kJ/kg-C)	3.712	3.712
Cp/Cv (Ent. Method)	1.157	1.157
Reid VP at 37.8 C (psig)	---	---
True VP at 37.8 C (psig)	17.11	17.11
Liq. Vol. Flow - Sum(Std. Cond) (barrel/day)	285.1	285.1
HHV Molar Basis (Std) (Btu/SCF)	46.45	46.45
HHV Mass Basis (Std) (kJ/kg)	2274	2274
CO2 Loading	---	---
CO2 App ML Con (kgmole/m3)	2.222e-002	2.222e-002
CO2 App WT Con (kgmol/kg)	2.204e-005	2.204e-005
Phase Fraction [Act. Vol. Basis]	0.0000	1.000
Mass Exergy (kJ/kg)	17.16	---
Viscosity Index	-0.2852	---
Ideal Gas Cp/Cv	1.329	1.329
Ideal Gas Cp (kJ/kgmole-C)	33.61	33.61
Mass Ideal Gas Cp (kJ/kg-C)	1.864	1.864
Bubble Point Pressure (psig)	13.01	---

COMPOSITION

Overall Phase

Vapour Fraction 0.0000

COMPONENTS	MOLAR FLOW (kgmole/h)	MOLE FRACTION	MASS FLOW (tonne/d)	MASS FRACTION	LIQUID VOLUME FLOW (m3/h)	LIQUID VOLUME FRACTION
Methane	0.0000	0.0000	0.0000	0.0000	0.0000	0.0000
Ethane	0.0000	0.0000	0.0000	0.0000	0.0000	0.0000
Propane	0.0000	0.0000	0.0000	0.0000	0.0000	0.0000
i-Butane	0.0000	0.0000	0.0000	0.0000	0.0000	0.0000
n-Butane	0.0000	0.0000	0.0000	0.0000	0.0000	0.0000

* Specified by user.

Material Stream: 3 (continued)

Fluid Package: Basis-1
Property Package: Peng-Robinson

COMPOSITION

Overall Phase (continued)

Vapour Fraction 0.0000

COMPONENTS	MOLAR FLOW (kgmole/h)	MOLE FRACTION	MASS FLOW (tonne/d)	MASS FRACTION	LIQUID VOLUME FLOW (m3/h)	LIQUID VOLUME FRACTION
i-Pentane	0.0000	0.0000	0.0000	0.0000	0.0000	0.0000
n-Pentane	0.0000	0.0000	0.0000	0.0000	0.0000	0.0000
n-Hexane	0.0000	0.0000	0.0000	0.0000	0.0000	0.0000
Nitrogen	0.0008	0.0000	0.0006	0.0000	0.0000	0.0000
CO2	0.0423	0.0004	0.0446	0.0010	0.0023	0.0012
H2S	0.0000	0.0000	0.0000	0.0000	0.0000	0.0000
H2O	106.2938	0.9996	45.9575	0.9990	1.9188	0.9988
NBP[1]95*	0.0000	0.0000	0.0000	0.0000	0.0000	0.0000
NBP[1]121*	0.0000	0.0000	0.0000	0.0000	0.0000	0.0000
NBP[1]147*	0.0000	0.0000	0.0000	0.0000	0.0000	0.0000
NBP[1]171*	0.0000	0.0000	0.0000	0.0000	0.0000	0.0000
NBP[1]195*	0.0000	0.0000	0.0000	0.0000	0.0000	0.0000
NBP[1]222*	0.0000	0.0000	0.0000	0.0000	0.0000	0.0000
NBP[1]248*	0.0000	0.0000	0.0000	0.0000	0.0000	0.0000
NBP[1]273*	0.0000	0.0000	0.0000	0.0000	0.0000	0.0000
NBP[1]299*	0.0000	0.0000	0.0000	0.0000	0.0000	0.0000
NBP[1]325*	0.0000	0.0000	0.0000	0.0000	0.0000	0.0000
NBP[1]351*	0.0000	0.0000	0.0000	0.0000	0.0000	0.0000
NBP[1]377*	0.0000	0.0000	0.0000	0.0000	0.0000	0.0000
NBP[1]402*	0.0000	0.0000	0.0000	0.0000	0.0000	0.0000
NBP[1]428*	0.0000	0.0000	0.0000	0.0000	0.0000	0.0000
NBP[1]454*	0.0000	0.0000	0.0000	0.0000	0.0000	0.0000
NBP[1]480*	0.0000	0.0000	0.0000	0.0000	0.0000	0.0000
NBP[1]505*	0.0000	0.0000	0.0000	0.0000	0.0000	0.0000
NBP[1]531*	0.0000	0.0000	0.0000	0.0000	0.0000	0.0000
NBP[1]557*	0.0000	0.0000	0.0000	0.0000	0.0000	0.0000
NBP[1]582*	0.0000	0.0000	0.0000	0.0000	0.0000	0.0000
NBP[1]608*	0.0000	0.0000	0.0000	0.0000	0.0000	0.0000
NBP[1]634*	0.0000	0.0000	0.0000	0.0000	0.0000	0.0000
NBP[1]659*	0.0000	0.0000	0.0000	0.0000	0.0000	0.0000
NBP[1]685*	0.0000	0.0000	0.0000	0.0000	0.0000	0.0000
NBP[1]711*	0.0000	0.0000	0.0000	0.0000	0.0000	0.0000
NBP[1]736*	0.0000	0.0000	0.0000	0.0000	0.0000	0.0000
NBP[1]762*	0.0000	0.0000	0.0000	0.0000	0.0000	0.0000
NBP[1]788*	0.0000	0.0000	0.0000	0.0000	0.0000	0.0000
NBP[1]825*	0.0000	0.0000	0.0000	0.0000	0.0000	0.0000
NBP[1]873*	0.0000	0.0000	0.0000	0.0000	0.0000	0.0000
NBP[1]926*	0.0000	0.0000	0.0000	0.0000	0.0000	0.0000
NBP[1]978*	0.0000	0.0000	0.0000	0.0000	0.0000	0.0000
NBP[1]1021*	0.0000	0.0000	0.0000	0.0000	0.0000	0.0000
NBP[1]1075*	0.0000	0.0000	0.0000	0.0000	0.0000	0.0000
NBP[1]1123*	0.0000	0.0000	0.0000	0.0000	0.0000	0.0000
NBP[1]1173*	0.0000	0.0000	0.0000	0.0000	0.0000	0.0000
NBP[1]1250*	0.0000	0.0000	0.0000	0.0000	0.0000	0.0000
NBP[1]1339*	0.0000	0.0000	0.0000	0.0000	0.0000	0.0000
NBP[1]1432*	0.0000	0.0000	0.0000	0.0000	0.0000	0.0000
NBP[1]1528*	0.0000	0.0000	0.0000	0.0000	0.0000	0.0000
NBP[1]1637*	0.0000	0.0000	0.0000	0.0000	0.0000	0.0000
NBP[1]1732*	0.0000	0.0000	0.0000	0.0000	0.0000	0.0000
NBP[1]1819*	0.0000	0.0000	0.0000	0.0000	0.0000	0.0000
NBP[1]1913*	0.0000	0.0000	0.0000	0.0000	0.0000	0.0000
Total	106.3369	1.0000	46.0026	1.0000	1.9210	1.0000

* Specified by user.

Material Stream: 3 (continued)

Fluid Package: Basis-1
Property Package: Peng-Robinson

COMPOSITION

Aqueous Phase

Phase Fraction 1.000

COMPONENTS	MOLAR FLOW (kgmole/h)	MOLE FRACTION	MASS FLOW (tonne/d)	MASS FRACTION	LIQUID VOLUME FLOW (m3/h)	LIQUID VOLUME FRACTION
Methane	0.0000	0.0000	0.0000	0.0000	0.0000	0.0000
Ethane	0.0000	0.0000	0.0000	0.0000	0.0000	0.0000
Propane	0.0000	0.0000	0.0000	0.0000	0.0000	0.0000
i-Butane	0.0000	0.0000	0.0000	0.0000	0.0000	0.0000
n-Butane	0.0000	0.0000	0.0000	0.0000	0.0000	0.0000
i-Pentane	0.0000	0.0000	0.0000	0.0000	0.0000	0.0000
n-Pentane	0.0000	0.0000	0.0000	0.0000	0.0000	0.0000
n-Hexane	0.0000	0.0000	0.0000	0.0000	0.0000	0.0000
Nitrogen	0.0008	0.0000	0.0006	0.0000	0.0000	0.0000
CO2	0.0423	0.0004	0.0446	0.0010	0.0023	0.0012
H2S	0.0000	0.0000	0.0000	0.0000	0.0000	0.0000
H2O	106.2938	0.9996	45.9575	0.9990	1.9188	0.9988
NBP[1]95*	0.0000	0.0000	0.0000	0.0000	0.0000	0.0000
NBP[1]121*	0.0000	0.0000	0.0000	0.0000	0.0000	0.0000
NBP[1]147*	0.0000	0.0000	0.0000	0.0000	0.0000	0.0000
NBP[1]171*	0.0000	0.0000	0.0000	0.0000	0.0000	0.0000
NBP[1]195*	0.0000	0.0000	0.0000	0.0000	0.0000	0.0000
NBP[1]222*	0.0000	0.0000	0.0000	0.0000	0.0000	0.0000
NBP[1]248*	0.0000	0.0000	0.0000	0.0000	0.0000	0.0000
NBP[1]273*	0.0000	0.0000	0.0000	0.0000	0.0000	0.0000
NBP[1]299*	0.0000	0.0000	0.0000	0.0000	0.0000	0.0000
NBP[1]325*	0.0000	0.0000	0.0000	0.0000	0.0000	0.0000
NBP[1]351*	0.0000	0.0000	0.0000	0.0000	0.0000	0.0000
NBP[1]377*	0.0000	0.0000	0.0000	0.0000	0.0000	0.0000
NBP[1]402*	0.0000	0.0000	0.0000	0.0000	0.0000	0.0000
NBP[1]428*	0.0000	0.0000	0.0000	0.0000	0.0000	0.0000
NBP[1]454*	0.0000	0.0000	0.0000	0.0000	0.0000	0.0000
NBP[1]480*	0.0000	0.0000	0.0000	0.0000	0.0000	0.0000
NBP[1]505*	0.0000	0.0000	0.0000	0.0000	0.0000	0.0000
NBP[1]531*	0.0000	0.0000	0.0000	0.0000	0.0000	0.0000
NBP[1]557*	0.0000	0.0000	0.0000	0.0000	0.0000	0.0000
NBP[1]582*	0.0000	0.0000	0.0000	0.0000	0.0000	0.0000
NBP[1]608*	0.0000	0.0000	0.0000	0.0000	0.0000	0.0000
NBP[1]634*	0.0000	0.0000	0.0000	0.0000	0.0000	0.0000
NBP[1]659*	0.0000	0.0000	0.0000	0.0000	0.0000	0.0000
NBP[1]685*	0.0000	0.0000	0.0000	0.0000	0.0000	0.0000
NBP[1]711*	0.0000	0.0000	0.0000	0.0000	0.0000	0.0000
NBP[1]736*	0.0000	0.0000	0.0000	0.0000	0.0000	0.0000
NBP[1]762*	0.0000	0.0000	0.0000	0.0000	0.0000	0.0000
NBP[1]788*	0.0000	0.0000	0.0000	0.0000	0.0000	0.0000
NBP[1]825*	0.0000	0.0000	0.0000	0.0000	0.0000	0.0000
NBP[1]873*	0.0000	0.0000	0.0000	0.0000	0.0000	0.0000
NBP[1]926*	0.0000	0.0000	0.0000	0.0000	0.0000	0.0000
NBP[1]978*	0.0000	0.0000	0.0000	0.0000	0.0000	0.0000
NBP[1]1021*	0.0000	0.0000	0.0000	0.0000	0.0000	0.0000
NBP[1]1075*	0.0000	0.0000	0.0000	0.0000	0.0000	0.0000
NBP[1]1123*	0.0000	0.0000	0.0000	0.0000	0.0000	0.0000
NBP[1]1173*	0.0000	0.0000	0.0000	0.0000	0.0000	0.0000
NBP[1]1250*	0.0000	0.0000	0.0000	0.0000	0.0000	0.0000
NBP[1]1339*	0.0000	0.0000	0.0000	0.0000	0.0000	0.0000
NBP[1]1432*	0.0000	0.0000	0.0000	0.0000	0.0000	0.0000
NBP[1]1528*	0.0000	0.0000	0.0000	0.0000	0.0000	0.0000
NBP[1]1637*	0.0000	0.0000	0.0000	0.0000	0.0000	0.0000
NBP[1]1732*	0.0000	0.0000	0.0000	0.0000	0.0000	0.0000

* Specified by user.

Material Stream: 3 (continued)

Fluid Package: Basis-1
Property Package: Peng-Robinson

COMPOSITION

Aqueous Phase (continued)

Phase Fraction 1.000

COMPONENTS	MOLAR FLOW (kgmole/h)	MOLE FRACTION	MASS FLOW (tonne/d)	MASS FRACTION	LIQUID VOLUME FLOW (m3/h)	LIQUID VOLUME FRACTION
NBP[1]1819*	0.0000	0.0000	0.0000	0.0000	0.0000	0.0000
NBP[1]1913*	0.0000	0.0000	0.0000	0.0000	0.0000	0.0000
Total	106.3369	1.0000	46.0026	1.0000	1.9210	1.0000

Material Stream: 4

Fluid Package: Basis-1
Property Package: Peng-Robinson

CONDITIONS

		Overall	Vapour Phase	Aqueous Phase		
Vapour / Phase Fraction		0.9992	0.9992	0.0008		
Temperature:	(F)	89.00 *	89.00	89.00		
Pressure:	(psig)	2090	2090	2090		
Molar Flow	(MMSCFD)	5.381	5.377	4.470e-003		
Mass Flow	(tonne/d)	137.6	137.5	9.639e-002		
Std Ideal Liq Vol Flow	(barrel/day)	2403	2402	0.6078		
Molar Enthalpy	(kJ/kgmole)	-9.218e+004	-9.202e+004	-2.856e+005		
Molar Entropy	(kJ/kgmole-C)	139.7	139.8	55.33		
Heat Flow	(MMBtu/hr)	-23.42	-23.36	-6.026e-002		
Liq Vol Flow @Std Cond	(barrel/day)	9.528e+005 *	9.521e+005	0.5972		

PROPERTIES

		Overall	Vapour Phase	Aqueous Phase		
Molecular Weight		21.39	21.39	18.04		
Molar Density	(kgmole/m3)	8.289	8.283	55.82		
Mass Density	(kg/m3)	177.3	177.2	1007		
Act. Volume Flow	(barrel/day)	4881	4880	0.6021		
Mass Enthalpy	(kJ/kg)	-4311	-4302	-1.583e+004		
Mass Entropy	(kJ/kg-C)	6.534	6.536	3.067		
Heat Capacity	(kJ/kgmole-C)	72.28	72.28	77.41		
Mass Heat Capacity	(kJ/kg-C)	3.380	3.379	4.291		
LHV Molar Basis (Std)	(Btu/SCF)	---	---	6.218e-004		
LHV Mass Basis (Std)	(kJ/kg)	---	---	3.042e-002		
Phase Fraction [Vol. Basis]		0.9997	0.9997	2.529e-004		
Phase Fraction [Mass Basis]		0.9993	0.9993	7.007e-004		
Partial Pressure of CO2	(psig)	57.08	---	---		
Cost Based on Flow	(Cost/s)	0.0000	0.0000	0.0000		
Act. Gas Flow	(ACT_m3/h)	32.33	32.33	---		
Avg. Liq. Density	(kgmole/m3)	16.84	16.83	55.29		
Specific Heat	(kJ/kgmole-C)	72.28	72.28	77.41		
Std. Gas Flow	(STD_m3/h)	6337	6332	5.264		
Std. Ideal Liq. Mass Density	(kg/m3)	360.1	359.9	997.5		
Act. Liq. Flow	(barrel/day)	0.6021	---	0.6021		
Z Factor		---	0.6913	0.1026		
Watson K		17.28	17.28	8.473		
User Property		---	---	---		
Partial Pressure of H2S	(psig)	-14.69	---	---		
Cp/(Cp - R)		1.130	1.130	1.120		
Cp/Cv		1.988	1.989	1.149		
Heat of Vap.	(kJ/kgmole)	---	---	---		
Kinematic Viscosity	(cSt)	---	0.1150	0.7977		
Liq. Mass Density (Std. Cond)	(kg/m3)	0.9081	0.9082	1015		
Liq. Vol. Flow (Std. Cond)	(barrel/day)	9.528e+005	9.521e+005	0.5972		
Liquid Fraction		8.306e-004	0.0000	1.000		
Molar Volume	(m3/kgmole)	0.1206	0.1207	1.791e-002		

* Specified by user.

Material Stream: 4 (continued)

Fluid Package: Basis-1
Property Package: Peng-Robinson

PROPERTIES

	Overall	Vapour Phase	Aqueous Phase
Mass Heat of Vap. (kJ/kg)	---	---	---
Phase Fraction [Molar Basis]	0.9992	0.9992	0.0008
Surface Tension (dyne/cm)	70.87	---	70.87
Thermal Conductivity (W/m-K)	---	5.535e-002	0.6196
Viscosity (cP)	---	2.037e-002	0.8033
Cv (Semi-Ideal) (kJ/kgmole-C)	63.97	63.96	69.10
Mass Cv (Semi-Ideal) (kJ/kg-C)	2.991	2.990	3.830
Cv (kJ/kgmole-C)	36.36	36.33	67.39
Mass Cv (kJ/kg-C)	1.700	1.699	3.735
Cv (Ent. Method) (kJ/kgmole-C)	37.47	36.33	66.85
Mass Cv (Ent. Method) (kJ/kg-C)	1.752	1.699	3.705
Cp/Cv (Ent. Method)	1.929	1.989	1.158
Reid VP at 37.8 C (psig)	---	---	---
True VP at 37.8 C (psig)	3607	---	176.8
Liq. Vol. Flow - Sum(Std. Cond) (barrel/day)	9.521e+005	9.521e+005	0.5972
HHV Molar Basis (Std) (Btu/SCF)	---	---	46.42
HHV Mass Basis (Std) (kJ/kg)	---	---	2271
CO2 Loading	---	---	---
CO2 App ML Con (kgmole/m3)	---	---	5.413e-002
CO2 App WT Con (kgmol/kg)	---	---	5.375e-005
Phase Fraction [Act. Vol. Basis]	0.9999	0.9999	1.233e-004
Mass Exergy (kJ/kg)	523.8	---	---
Viscosity Index	---	---	---
Ideal Gas Cp/Cv	1.248	1.248	1.329
Ideal Gas Cp (kJ/kgmole-C)	41.87	41.87	33.62
Mass Ideal Gas Cp (kJ/kg-C)	1.958	1.958	1.863
Bubble Point Pressure (psig)	4590	---	---

COMPOSITION

Overall Phase

Vapour Fraction 0.9992

COMPONENTS	MOLAR FLOW (kgmole/h)	MOLE FRACTION	MASS FLOW (tonne/d)	MASS FRACTION	LIQUID VOLUME FLOW (m3/h)	LIQUID VOLUME FRACTION
Methane	205.0219	0.7649	78.9395	0.5738	10.9860	0.6901
Ethane	27.6541	0.1032	19.9573	0.1451	2.3379	0.1469
Propane	13.5902	0.0507	14.3829	0.1046	1.1828	0.0743
i-Butane	1.5866	0.0059	2.2133	0.0161	0.1641	0.0103
n-Butane	2.8841	0.0108	4.0233	0.0292	0.2874	0.0181
i-Pentane	0.4635	0.0017	0.8025	0.0058	0.0536	0.0034
n-Pentane	0.4652	0.0017	0.8056	0.0059	0.0533	0.0033
n-Hexane	0.3694	0.0014	0.7639	0.0056	0.0480	0.0030
Nitrogen	5.5752	0.0208	3.7483	0.0272	0.1937	0.0122
CO2	9.1335	0.0341	9.6471	0.0701	0.4870	0.0306
H2S	0.0005	0.0000	0.0004	0.0000	0.0000	0.0000
H2O	0.3945	0.0015	0.1706	0.0012	0.0071	0.0004
NBP[1]95*	0.1425	0.0005	0.2323	0.0017	0.0142	0.0009
NBP[1]121*	0.1318	0.0005	0.2305	0.0017	0.0139	0.0009
NBP[1]147*	0.1254	0.0005	0.2414	0.0018	0.0144	0.0009
NBP[1]171*	0.1733	0.0006	0.3646	0.0027	0.0213	0.0013
NBP[1]195*	0.1579	0.0006	0.3546	0.0026	0.0205	0.0013
NBP[1]222*	0.0732	0.0003	0.1768	0.0013	0.0101	0.0006
NBP[1]248*	0.0375	0.0001	0.0974	0.0007	0.0055	0.0003
NBP[1]273*	0.0181	0.0001	0.0503	0.0004	0.0028	0.0002
NBP[1]299*	0.0083	0.0000	0.0245	0.0002	0.0014	0.0001
NBP[1]325*	0.0033	0.0000	0.0105	0.0001	0.0006	0.0000
NBP[1]351*	0.0015	0.0000	0.0050	0.0000	0.0003	0.0000
NBP[1]377*	0.0007	0.0000	0.0025	0.0000	0.0001	0.0000

Licensed to: PETROCHEMICAL ENGINEERIN
* Specified by user.

Material Stream: 4 (continued)

Fluid Package: Basis-1
Property Package: Peng-Robinson

COMPOSITION

Overall Phase (continued)

Vapour Fraction 0.9992

COMPONENTS	MOLAR FLOW (kgmole/h)	MOLE FRACTION	MASS FLOW (tonne/d)	MASS FRACTION	LIQUID VOLUME FLOW (m3/h)	LIQUID VOLUME FRACTION
NBP[1]402*	0.0003	0.0000	0.0013	0.0000	0.0001	0.0000
NBP[1]428*	0.0002	0.0000	0.0007	0.0000	0.0000	0.0000
NBP[1]454*	0.0001	0.0000	0.0003	0.0000	0.0000	0.0000
NBP[1]480*	0.0000	0.0000	0.0002	0.0000	0.0000	0.0000
NBP[1]505*	0.0000	0.0000	0.0001	0.0000	0.0000	0.0000
NBP[1]531*	0.0000	0.0000	0.0000	0.0000	0.0000	0.0000
NBP[1]557*	0.0000	0.0000	0.0000	0.0000	0.0000	0.0000
NBP[1]582*	0.0000	0.0000	0.0000	0.0000	0.0000	0.0000
NBP[1]608*	0.0000	0.0000	0.0000	0.0000	0.0000	0.0000
NBP[1]634*	0.0000	0.0000	0.0000	0.0000	0.0000	0.0000
NBP[1]659*	0.0000	0.0000	0.0000	0.0000	0.0000	0.0000
NBP[1]685*	0.0000	0.0000	0.0000	0.0000	0.0000	0.0000
NBP[1]711*	0.0000	0.0000	0.0000	0.0000	0.0000	0.0000
NBP[1]736*	0.0000	0.0000	0.0000	0.0000	0.0000	0.0000
NBP[1]762*	0.0000	0.0000	0.0000	0.0000	0.0000	0.0000
NBP[1]788*	0.0000	0.0000	0.0000	0.0000	0.0000	0.0000
NBP[1]825*	0.0000	0.0000	0.0000	0.0000	0.0000	0.0000
NBP[1]873*	0.0000	0.0000	0.0000	0.0000	0.0000	0.0000
NBP[1]926*	0.0000	0.0000	0.0000	0.0000	0.0000	0.0000
NBP[1]978*	0.0000	0.0000	0.0000	0.0000	0.0000	0.0000
NBP[1]1021*	0.0000	0.0000	0.0000	0.0000	0.0000	0.0000
NBP[1]1075*	0.0000	0.0000	0.0000	0.0000	0.0000	0.0000
NBP[1]1123*	0.0000	0.0000	0.0000	0.0000	0.0000	0.0000
NBP[1]1173*	0.0000	0.0000	0.0000	0.0000	0.0000	0.0000
NBP[1]1250*	0.0000	0.0000	0.0000	0.0000	0.0000	0.0000
NBP[1]1339*	0.0000	0.0000	0.0000	0.0000	0.0000	0.0000
NBP[1]1432*	0.0000	0.0000	0.0000	0.0000	0.0000	0.0000
NBP[1]1528*	0.0000	0.0000	0.0000	0.0000	0.0000	0.0000
NBP[1]1637*	0.0000	0.0000	0.0000	0.0000	0.0000	0.0000
NBP[1]1732*	0.0000	0.0000	0.0000	0.0000	0.0000	0.0000
NBP[1]1819*	0.0001	0.0000	0.0029	0.0000	0.0001	0.0000
NBP[1]1913*	0.0112	0.0000	0.3148	0.0023	0.0121	0.0008
Total	268.0242	1.0000	137.5655	1.0000	15.9186	1.0000

Vapour Phase

Phase Fraction 0.9992

COMPONENTS	MOLAR FLOW (kgmole/h)	MOLE FRACTION	MASS FLOW (tonne/d)	MASS FRACTION	LIQUID VOLUME FLOW (m3/h)	LIQUID VOLUME FRACTION
Methane	205.0219	0.7656	78.9395	0.5742	10.9860	0.6903
Ethane	27.6541	0.1033	19.9573	0.1452	2.3379	0.1469
Propane	13.5902	0.0507	14.3829	0.1046	1.1828	0.0743
i-Butane	1.5866	0.0059	2.2133	0.0161	0.1641	0.0103
n-Butane	2.8841	0.0108	4.0233	0.0293	0.2874	0.0181
i-Pentane	0.4635	0.0017	0.8025	0.0058	0.0536	0.0034
n-Pentane	0.4652	0.0017	0.8056	0.0059	0.0533	0.0033
n-Hexane	0.3694	0.0014	0.7639	0.0056	0.0480	0.0030
Nitrogen	5.5752	0.0208	3.7483	0.0273	0.1937	0.0122
CO2	9.1333	0.0341	9.6469	0.0702	0.4870	0.0306
H2S	0.0005	0.0000	0.0004	0.0000	0.0000	0.0000
H2O	0.1721	0.0006	0.0744	0.0005	0.0031	0.0002
NBP[1]95*	0.1425	0.0005	0.2323	0.0017	0.0142	0.0009
NBP[1]121*	0.1318	0.0005	0.2305	0.0017	0.0139	0.0009
NBP[1]147*	0.1254	0.0005	0.2414	0.0018	0.0144	0.0009
NBP[1]171*	0.1733	0.0006	0.3646	0.0027	0.0213	0.0013
NBP[1]195*	0.1579	0.0006	0.3546	0.0026	0.0205	0.0013

* Specified by user.

Material Stream: 4 (continued)

Fluid Package: Basis-1
Property Package: Peng-Robinson

COMPOSITION

Vapour Phase (continued)

Phase Fraction 0.9992

COMPONENTS	MOLAR FLOW (kgmole/h)	MOLE FRACTION	MASS FLOW (tonne/d)	MASS FRACTION	LIQUID VOLUME FLOW (m3/h)	LIQUID VOLUME FRACTION
NBP[1]222*	0.0732	0.0003	0.1768	0.0013	0.0101	0.0006
NBP[1]248*	0.0375	0.0001	0.0974	0.0007	0.0055	0.0003
NBP[1]273*	0.0181	0.0001	0.0503	0.0004	0.0028	0.0002
NBP[1]299*	0.0083	0.0000	0.0245	0.0002	0.0014	0.0001
NBP[1]325*	0.0033	0.0000	0.0105	0.0001	0.0006	0.0000
NBP[1]351*	0.0015	0.0000	0.0050	0.0000	0.0003	0.0000
NBP[1]377*	0.0007	0.0000	0.0025	0.0000	0.0001	0.0000
NBP[1]402*	0.0003	0.0000	0.0013	0.0000	0.0001	0.0000
NBP[1]428*	0.0002	0.0000	0.0007	0.0000	0.0000	0.0000
NBP[1]454*	0.0001	0.0000	0.0003	0.0000	0.0000	0.0000
NBP[1]480*	0.0000	0.0000	0.0002	0.0000	0.0000	0.0000
NBP[1]505*	0.0000	0.0000	0.0001	0.0000	0.0000	0.0000
NBP[1]531*	0.0000	0.0000	0.0000	0.0000	0.0000	0.0000
NBP[1]557*	0.0000	0.0000	0.0000	0.0000	0.0000	0.0000
NBP[1]582*	0.0000	0.0000	0.0000	0.0000	0.0000	0.0000
NBP[1]608*	0.0000	0.0000	0.0000	0.0000	0.0000	0.0000
NBP[1]634*	0.0000	0.0000	0.0000	0.0000	0.0000	0.0000
NBP[1]659*	0.0000	0.0000	0.0000	0.0000	0.0000	0.0000
NBP[1]685*	0.0000	0.0000	0.0000	0.0000	0.0000	0.0000
NBP[1]711*	0.0000	0.0000	0.0000	0.0000	0.0000	0.0000
NBP[1]736*	0.0000	0.0000	0.0000	0.0000	0.0000	0.0000
NBP[1]762*	0.0000	0.0000	0.0000	0.0000	0.0000	0.0000
NBP[1]788*	0.0000	0.0000	0.0000	0.0000	0.0000	0.0000
NBP[1]825*	0.0000	0.0000	0.0000	0.0000	0.0000	0.0000
NBP[1]873*	0.0000	0.0000	0.0000	0.0000	0.0000	0.0000
NBP[1]926*	0.0000	0.0000	0.0000	0.0000	0.0000	0.0000
NBP[1]978*	0.0000	0.0000	0.0000	0.0000	0.0000	0.0000
NBP[1]1021*	0.0000	0.0000	0.0000	0.0000	0.0000	0.0000
NBP[1]1075*	0.0000	0.0000	0.0000	0.0000	0.0000	0.0000
NBP[1]1123*	0.0000	0.0000	0.0000	0.0000	0.0000	0.0000
NBP[1]1173*	0.0000	0.0000	0.0000	0.0000	0.0000	0.0000
NBP[1]1250*	0.0000	0.0000	0.0000	0.0000	0.0000	0.0000
NBP[1]1339*	0.0000	0.0000	0.0000	0.0000	0.0000	0.0000
NBP[1]1432*	0.0000	0.0000	0.0000	0.0000	0.0000	0.0000
NBP[1]1528*	0.0000	0.0000	0.0000	0.0000	0.0000	0.0000
NBP[1]1637*	0.0000	0.0000	0.0000	0.0000	0.0000	0.0000
NBP[1]1732*	0.0000	0.0000	0.0000	0.0000	0.0000	0.0000
NBP[1]1819*	0.0001	0.0000	0.0029	0.0000	0.0001	0.0000
NBP[1]1913*	0.0112	0.0000	0.3148	0.0023	0.0121	0.0008
Total	267.8016	1.0000	137.4691	1.0000	15.9145	1.0000

Aqueous Phase

Phase Fraction 8.306e-004

COMPONENTS	MOLAR FLOW (kgmole/h)	MOLE FRACTION	MASS FLOW (tonne/d)	MASS FRACTION	LIQUID VOLUME FLOW (m3/h)	LIQUID VOLUME FRACTION
Methane	0.0000	0.0000	0.0000	0.0000	0.0000	0.0000
Ethane	0.0000	0.0000	0.0000	0.0000	0.0000	0.0000
Propane	0.0000	0.0000	0.0000	0.0000	0.0000	0.0000
i-Butane	0.0000	0.0000	0.0000	0.0000	0.0000	0.0000
n-Butane	0.0000	0.0000	0.0000	0.0000	0.0000	0.0000
i-Pentane	0.0000	0.0000	0.0000	0.0000	0.0000	0.0000
n-Pentane	0.0000	0.0000	0.0000	0.0000	0.0000	0.0000
n-Hexane	0.0000	0.0000	0.0000	0.0000	0.0000	0.0000
Nitrogen	0.0000	0.0000	0.0000	0.0001	0.0000	0.0001
CO2	0.0002	0.0010	0.0002	0.0024	0.0000	0.0029

* Specified by user.

Material Stream: 4 (continued)

Fluid Package: Basis-1
Property Package: Peng-Robinson

COMPOSITION

Aqueous Phase (continued)

Phase Fraction 8.306e-004

COMPONENTS	MOLAR FLOW (kgmole/h)	MOLE FRACTION	MASS FLOW (tonne/d)	MASS FRACTION	LIQUID VOLUME FLOW (m3/h)	LIQUID VOLUME FRACTION
H2S	0.0000	0.0000	0.0000	0.0000	0.0000	0.0000
H2O	0.2224	0.9990	0.0962	0.9976	0.0040	0.9971
NBP[1]95*	0.0000	0.0000	0.0000	0.0000	0.0000	0.0000
NBP[1]121*	0.0000	0.0000	0.0000	0.0000	0.0000	0.0000
NBP[1]147*	0.0000	0.0000	0.0000	0.0000	0.0000	0.0000
NBP[1]171*	0.0000	0.0000	0.0000	0.0000	0.0000	0.0000
NBP[1]195*	0.0000	0.0000	0.0000	0.0000	0.0000	0.0000
NBP[1]222*	0.0000	0.0000	0.0000	0.0000	0.0000	0.0000
NBP[1]248*	0.0000	0.0000	0.0000	0.0000	0.0000	0.0000
NBP[1]273*	0.0000	0.0000	0.0000	0.0000	0.0000	0.0000
NBP[1]299*	0.0000	0.0000	0.0000	0.0000	0.0000	0.0000
NBP[1]325*	0.0000	0.0000	0.0000	0.0000	0.0000	0.0000
NBP[1]351*	0.0000	0.0000	0.0000	0.0000	0.0000	0.0000
NBP[1]377*	0.0000	0.0000	0.0000	0.0000	0.0000	0.0000
NBP[1]402*	0.0000	0.0000	0.0000	0.0000	0.0000	0.0000
NBP[1]428*	0.0000	0.0000	0.0000	0.0000	0.0000	0.0000
NBP[1]454*	0.0000	0.0000	0.0000	0.0000	0.0000	0.0000
NBP[1]480*	0.0000	0.0000	0.0000	0.0000	0.0000	0.0000
NBP[1]505*	0.0000	0.0000	0.0000	0.0000	0.0000	0.0000
NBP[1]531*	0.0000	0.0000	0.0000	0.0000	0.0000	0.0000
NBP[1]557*	0.0000	0.0000	0.0000	0.0000	0.0000	0.0000
NBP[1]582*	0.0000	0.0000	0.0000	0.0000	0.0000	0.0000
NBP[1]608*	0.0000	0.0000	0.0000	0.0000	0.0000	0.0000
NBP[1]634*	0.0000	0.0000	0.0000	0.0000	0.0000	0.0000
NBP[1]659*	0.0000	0.0000	0.0000	0.0000	0.0000	0.0000
NBP[1]685*	0.0000	0.0000	0.0000	0.0000	0.0000	0.0000
NBP[1]711*	0.0000	0.0000	0.0000	0.0000	0.0000	0.0000
NBP[1]736*	0.0000	0.0000	0.0000	0.0000	0.0000	0.0000
NBP[1]762*	0.0000	0.0000	0.0000	0.0000	0.0000	0.0000
NBP[1]788*	0.0000	0.0000	0.0000	0.0000	0.0000	0.0000
NBP[1]825*	0.0000	0.0000	0.0000	0.0000	0.0000	0.0000
NBP[1]873*	0.0000	0.0000	0.0000	0.0000	0.0000	0.0000
NBP[1]926*	0.0000	0.0000	0.0000	0.0000	0.0000	0.0000
NBP[1]978*	0.0000	0.0000	0.0000	0.0000	0.0000	0.0000
NBP[1]1021*	0.0000	0.0000	0.0000	0.0000	0.0000	0.0000
NBP[1]1075*	0.0000	0.0000	0.0000	0.0000	0.0000	0.0000
NBP[1]1123*	0.0000	0.0000	0.0000	0.0000	0.0000	0.0000
NBP[1]1173*	0.0000	0.0000	0.0000	0.0000	0.0000	0.0000
NBP[1]1250*	0.0000	0.0000	0.0000	0.0000	0.0000	0.0000
NBP[1]1339*	0.0000	0.0000	0.0000	0.0000	0.0000	0.0000
NBP[1]1432*	0.0000	0.0000	0.0000	0.0000	0.0000	0.0000
NBP[1]1528*	0.0000	0.0000	0.0000	0.0000	0.0000	0.0000
NBP[1]1637*	0.0000	0.0000	0.0000	0.0000	0.0000	0.0000
NBP[1]1732*	0.0000	0.0000	0.0000	0.0000	0.0000	0.0000
NBP[1]1819*	0.0000	0.0000	0.0000	0.0000	0.0000	0.0000
NBP[1]1913*	0.0000	0.0000	0.0000	0.0000	0.0000	0.0000
Total	0.2226	1.0000	0.0964	1.0000	0.0040	1.0000

Material Stream: 5

Fluid Package: Basis-1
Property Package: Peng-Robinson

CONDITIONS

	Overall	Vapour Phase	Liquid Phase	Aqueous Phase
Vapour / Phase Fraction	0.6644	0.6644	0.0637	0.2719

Licensed to: PETROCHEMICAL ENGINEERIN
* Specified by user.

Material Stream: 5 (continued)

Fluid Package: Basis-1
Property Package: Peng-Robinson

CONDITIONS

		Overall	Vapour Phase	Liquid Phase	Aqueous Phase
Temperature:	(F)	89.98	89.98	89.98	89.98
Pressure:	(psig)	2090	2090	2090	2090
Molar Flow	(MMSCFD)	7.874	5.231	0.5019	2.140
Mass Flow	(tonne/d)	237.5	139.1	52.25	46.16
Std Ideal Liq Vol Flow	(barrel/day)	3142	2371	479.9	291.0
Molar Enthalpy	(kJ/kgmole)	-1.534e+005	-9.314e+004	-2.178e+005	-2.855e+005
Molar Entropy	(kJ/kgmole-C)	120.5	139.7	197.5	55.46
Heat Flow	(MMBtu/hr)	-57.01	-23.00	-5.161	-28.85
Liq Vol Flow @Std Cond	(barrel/day)	2.954e+005 *	9.260e+005	461.5	286.0

PROPERTIES

		Overall	Vapour Phase	Liquid Phase	Aqueous Phase
Molecular Weight		25.24	22.25	87.09	18.04
Molar Density	(kgmole/m3)	10.98	8.487	8.041	55.80
Mass Density	(kg/m3)	277.1	188.8	700.3	1007
Act. Volume Flow	(barrel/day)	5392	4634	469.3	288.4
Mass Enthalpy	(kJ/kg)	-6077	-4186	-2501	-1.583e+004
Mass Entropy	(kJ/kg-C)	4.773	6.278	2.268	3.074
Heat Capacity	(kJ/kgmole-C)	83.30	76.12	183.3	77.41
Mass Heat Capacity	(kJ/kg-C)	3.300	3.421	2.104	4.291
LHV Molar Basis (Std)	(Btu/SCF)	---	---	---	6.334e-004
LHV Mass Basis (Std)	(kJ/kg)	---	---	---	3.099e-002
Phase Fraction [Vol. Basis]		0.7547	0.7547	0.1527	9.262e-002
Phase Fraction [Mass Basis]		0.5858	0.5858	0.2199	0.1943
Partial Pressure of CO2	(psig)	54.43	---	---	---
Cost Based on Flow	(Cost/s)	0.0000	0.0000	0.0000	0.0000
Act. Gas Flow	(ACT_m3/h)	30.70	30.70	---	---
Avg. Liq. Density	(kgmole/m3)	18.84	16.59	7.864	55.30
Specific Heat	(kJ/kgmole-C)	83.30	76.12	183.3	77.41
Std. Gas Flow	(STD_m3/h)	9272	6161	591.0	2521
Std. Ideal Liq. Mass Density	(kg/m3)	475.5	369.1	684.8	997.5
Act. Liq. Flow	(barrel/day)	757.7	---	469.3	288.4
Z Factor		---	0.6735	0.7108	0.1024
Watson K		15.58	16.99	12.28	8.469
User Property		---	---	---	---
Partial Pressure of H2S	(psig)	-14.69	---	---	---
Cp/(Cp - R)		1.111	1.123	1.048	1.120
Cp/Cv		1.471	2.007	1.291	1.149
Heat of Vap.	(kJ/kgmole)	6.038e+004	---	---	---
Kinematic Viscosity	(cSt)	---	0.1117	1.948	0.7558
Liq. Mass Density (Std. Cond)	(kg/m3)	5.058	0.9452	712.1	1015
Liq. Vol. Flow (Std. Cond)	(barrel/day)	2.954e+005	9.260e+005	461.5	286.0
Liquid Fraction		0.3356	0.0000	1.000	1.000
Molar Volume	(m3/kgmole)	9.108e-002	0.1178	0.1244	1.792e-002
Mass Heat of Vap.	(kJ/kg)	2392	---	---	---
Phase Fraction [Molar Basis]		0.6644	0.6644	0.0637	0.2719
Surface Tension	(dyne/cm)	---	---	9.238	70.78
Thermal Conductivity	(W/m-K)	---	5.650e-002	8.530e-002	0.6213
Viscosity	(cP)	---	2.109e-002	1.364	0.7608
Cv (Semi-Ideal)	(kJ/kgmole-C)	74.98	67.80	175.0	69.10
Mass Cv (Semi-Ideal)	(kJ/kg-C)	2.971	3.047	2.009	3.831
Cv	(kJ/kgmole-C)	56.65	37.93	142.0	67.38
Mass Cv	(kJ/kg-C)	2.244	1.705	1.630	3.735
Cv (Ent. Method)	(kJ/kgmole-C)	---	36.85	---	66.76
Mass Cv (Ent. Method)	(kJ/kg-C)	---	1.656	---	3.701
Cp/Cv (Ent. Method)		---	2.065	---	1.160
Reid VP at 37.8 C	(psig)	3319	2452	399.0	---

* Specified by user.

Material Stream: 5 (continued)

Fluid Package: Basis-1
Property Package: Peng-Robinson

PROPERTIES

		Overall	Vapour Phase	Liquid Phase	Aqueous Phase
True VP at 37.8 C	(psig)	6318	2453	2168	182.1
Liq. Vol. Flow - Sum(Std. Cond)	(barrel/day)	9.267e+005	9.260e+005	461.5	286.0
HHV Molar Basis (Std)	(Btu/SCF)	---	---	---	46.42
HHV Mass Basis (Std)	(kJ/kg)	---	---	---	2271
CO2 Loading		---	---	---	---
CO2 App ML Con	(kgmole/m3)	---	---	0.2444	5.118e-002
CO2 App WT Con	(kgmol/kg)	---	---	3.490e-004	5.084e-005
Phase Fraction [Act. Vol. Basis]		0.8595	0.8595	8.703e-002	5.349e-002
Mass Exergy	(kJ/kg)	317.7	---	---	---
Viscosity Index		-33.28	---	---	---
Ideal Gas Cp/Cv		1.215	1.238	1.062	1.329
Ideal Gas Cp	(kJ/kgmole-C)	46.91	43.24	141.8	33.62
Mass Ideal Gas Cp	(kJ/kg-C)	1.859	1.943	1.628	1.864
Bubble Point Pressure	(psig)	6228	---	---	---

COMPOSITION

Overall Phase

Vapour Fraction 0.6644

COMPONENTS	MOLAR FLOW (kgmole/h)	MOLE FRACTION	MASS FLOW (tonne/d)	MASS FRACTION	LIQUID VOLUME FLOW (m3/h)	LIQUID VOLUME FRACTION
Methane	207.0440	0.5280	79.7181	0.3356	11.0944	0.5330
Ethane	28.8006	0.0734	20.7848	0.0875	2.4348	0.1170
Propane	15.2677	0.0389	16.1583	0.0680	1.3288	0.0638
i-Butane	2.0287	0.0052	2.8300	0.0119	0.2098	0.0101
n-Butane	3.9513	0.0101	5.5120	0.0232	0.3938	0.0189
i-Pentane	0.8495	0.0022	1.4710	0.0062	0.0983	0.0047
n-Pentane	0.9602	0.0024	1.6627	0.0070	0.1100	0.0053
n-Hexane	1.4698	0.0037	3.0399	0.0128	0.1911	0.0092
Nitrogen	5.5989	0.0143	3.7642	0.0158	0.1945	0.0093
CO2	9.4151	0.0240	9.9445	0.0419	0.5020	0.0241
H2S	0.0006	0.0000	0.0005	0.0000	0.0000	0.0000
H2O	106.6990	0.2721	46.1326	0.1942	1.9261	0.0925
NBP[1]95*	0.2883	0.0007	0.4699	0.0020	0.0288	0.0014
NBP[1]121*	0.3381	0.0009	0.5912	0.0025	0.0358	0.0017
NBP[1]147*	0.4314	0.0011	0.8304	0.0035	0.0494	0.0024
NBP[1]171*	0.8224	0.0021	1.7306	0.0073	0.1013	0.0049
NBP[1]195*	1.0758	0.0027	2.4160	0.0102	0.1398	0.0067
NBP[1]222*	0.8003	0.0020	1.9331	0.0081	0.1105	0.0053
NBP[1]248*	0.6657	0.0017	1.7287	0.0073	0.0976	0.0047
NBP[1]273*	0.5358	0.0014	1.4881	0.0063	0.0831	0.0040
NBP[1]299*	0.4185	0.0011	1.2393	0.0052	0.0684	0.0033
NBP[1]325*	0.3029	0.0008	0.9528	0.0040	0.0521	0.0025
NBP[1]351*	0.2456	0.0006	0.8214	0.0035	0.0445	0.0021
NBP[1]377*	0.2247	0.0006	0.8014	0.0034	0.0429	0.0021
NBP[1]402*	0.2061	0.0005	0.7838	0.0033	0.0416	0.0020
NBP[1]428*	0.1961	0.0005	0.7956	0.0033	0.0418	0.0020
NBP[1]454*	0.1956	0.0005	0.8480	0.0036	0.0441	0.0021
NBP[1]480*	0.1982	0.0005	0.9182	0.0039	0.0473	0.0023
NBP[1]505*	0.1920	0.0005	0.9484	0.0040	0.0484	0.0023
NBP[1]531*	0.1852	0.0005	0.9740	0.0041	0.0492	0.0024
NBP[1]557*	0.1784	0.0005	0.9978	0.0042	0.0500	0.0024
NBP[1]582*	0.1706	0.0004	1.0132	0.0043	0.0503	0.0024
NBP[1]608*	0.1643	0.0004	1.0351	0.0044	0.0510	0.0025
NBP[1]634*	0.1611	0.0004	1.0753	0.0045	0.0526	0.0025
NBP[1]659*	0.1586	0.0004	1.1194	0.0047	0.0543	0.0026
NBP[1]685*	0.1641	0.0004	1.2227	0.0051	0.0588	0.0028
NBP[1]711*	0.1715	0.0004	1.3445	0.0057	0.0642	0.0031

* Specified by user.

Material Stream: 5 (continued)

Fluid Package: Basis-1
Property Package: Peng-Robinson

COMPOSITION

Overall Phase (continued)

Vapour Fraction 0.6644

COMPONENTS	MOLAR FLOW (kgmole/h)	MOLE FRACTION	MASS FLOW (tonne/d)	MASS FRACTION	LIQUID VOLUME FLOW (m3/h)	LIQUID VOLUME FRACTION
NBP[1]736*	0.1697	0.0004	1.3915	0.0059	0.0659	0.0032
NBP[1]762*	0.1653	0.0004	1.4214	0.0060	0.0669	0.0032
NBP[1]788*	0.1585	0.0004	1.4424	0.0061	0.0674	0.0032
NBP[1]825*	0.2655	0.0007	2.5963	0.0109	0.1201	0.0058
NBP[1]873*	0.1830	0.0005	1.9404	0.0082	0.0887	0.0043
NBP[1]926*	0.1437	0.0004	1.6472	0.0069	0.0744	0.0036
NBP[1]978*	0.1474	0.0004	1.8524	0.0078	0.0825	0.0040
NBP[1]1021*	0.0728	0.0002	0.9655	0.0041	0.0426	0.0020
NBP[1]1075*	0.0449	0.0001	0.6310	0.0027	0.0276	0.0013
NBP[1]1123*	0.0417	0.0001	0.6267	0.0026	0.0271	0.0013
NBP[1]1173*	0.0300	0.0001	0.4772	0.0020	0.0205	0.0010
NBP[1]1250*	0.0393	0.0001	0.6767	0.0028	0.0287	0.0014
NBP[1]1339*	0.0364	0.0001	0.6999	0.0029	0.0291	0.0014
NBP[1]1432*	0.0257	0.0001	0.5397	0.0023	0.0221	0.0011
NBP[1]1528*	0.0180	0.0000	0.4082	0.0017	0.0165	0.0008
NBP[1]1637*	0.0127	0.0000	0.3047	0.0013	0.0122	0.0006
NBP[1]1732*	0.0101	0.0000	0.2565	0.0011	0.0101	0.0005
NBP[1]1819*	0.0097	0.0000	0.2590	0.0011	0.0101	0.0005
NBP[1]1913*	0.0112	0.0000	0.3148	0.0013	0.0121	0.0006
Total	392.1623	1.0000	237.5489	1.0000	20.8162	1.0000

Vapour Phase

Phase Fraction 0.6644

COMPONENTS	MOLAR FLOW (kgmole/h)	MOLE FRACTION	MASS FLOW (tonne/d)	MASS FRACTION	LIQUID VOLUME FLOW (m3/h)	LIQUID VOLUME FRACTION
Methane	197.5775	0.7583	76.0732	0.5467	10.5871	0.6739
Ethane	26.2225	0.1006	18.9242	0.1360	2.2169	0.1411
Propane	13.0983	0.0503	13.8623	0.0996	1.1400	0.0726
i-Butane	1.6359	0.0063	2.2820	0.0164	0.1692	0.0108
n-Butane	3.0834	0.0118	4.3013	0.0309	0.3073	0.0196
i-Pentane	0.6045	0.0023	1.0467	0.0075	0.0700	0.0045
n-Pentane	0.6554	0.0025	1.1349	0.0082	0.0751	0.0048
n-Hexane	0.8360	0.0032	1.7292	0.0124	0.1087	0.0069
Nitrogen	5.4316	0.0208	3.6517	0.0262	0.1887	0.0120
CO2	8.5576	0.0328	9.0388	0.0650	0.4563	0.0290
H2S	0.0005	0.0000	0.0004	0.0000	0.0000	0.0000
H2O	0.1735	0.0007	0.0750	0.0005	0.0031	0.0002
NBP[1]95*	0.1967	0.0008	0.3207	0.0023	0.0197	0.0013
NBP[1]121*	0.2150	0.0008	0.3759	0.0027	0.0227	0.0014
NBP[1]147*	0.2517	0.0010	0.4844	0.0035	0.0288	0.0018
NBP[1]171*	0.4368	0.0017	0.9192	0.0066	0.0538	0.0034
NBP[1]195*	0.5145	0.0020	1.1554	0.0083	0.0668	0.0043
NBP[1]222*	0.3330	0.0013	0.8042	0.0058	0.0460	0.0029
NBP[1]248*	0.2380	0.0009	0.6181	0.0044	0.0349	0.0022
NBP[1]273*	0.1618	0.0006	0.4493	0.0032	0.0251	0.0016
NBP[1]299*	0.1047	0.0004	0.3099	0.0022	0.0171	0.0011
NBP[1]325*	0.0612	0.0002	0.1925	0.0014	0.0105	0.0007
NBP[1]351*	0.0393	0.0002	0.1314	0.0009	0.0071	0.0005
NBP[1]377*	0.0276	0.0001	0.0984	0.0007	0.0053	0.0003
NBP[1]402*	0.0192	0.0001	0.0730	0.0005	0.0039	0.0002
NBP[1]428*	0.0136	0.0001	0.0550	0.0004	0.0029	0.0002
NBP[1]454*	0.0099	0.0000	0.0428	0.0003	0.0022	0.0001
NBP[1]480*	0.0072	0.0000	0.0333	0.0002	0.0017	0.0001
NBP[1]505*	0.0049	0.0000	0.0243	0.0002	0.0012	0.0001
NBP[1]531*	0.0033	0.0000	0.0174	0.0001	0.0009	0.0001

* Specified by user.

Material Stream: 5 (continued)

Fluid Package: Basis-1
Property Package: Peng-Robinson

COMPOSITION

Vapour Phase (continued)

Phase Fraction 0.6644

COMPONENTS	MOLAR FLOW (kgmole/h)	MOLE FRACTION	MASS FLOW (tonne/d)	MASS FRACTION	LIQUID VOLUME FLOW (m3/h)	LIQUID VOLUME FRACTION
NBP[1]557*	0.0022	0.0000	0.0122	0.0001	0.0006	0.0000
NBP[1]582*	0.0014	0.0000	0.0084	0.0001	0.0004	0.0000
NBP[1]608*	0.0009	0.0000	0.0057	0.0000	0.0003	0.0000
NBP[1]634*	0.0006	0.0000	0.0039	0.0000	0.0002	0.0000
NBP[1]659*	0.0004	0.0000	0.0026	0.0000	0.0001	0.0000
NBP[1]685*	0.0002	0.0000	0.0018	0.0000	0.0001	0.0000
NBP[1]711*	0.0002	0.0000	0.0013	0.0000	0.0001	0.0000
NBP[1]736*	0.0001	0.0000	0.0008	0.0000	0.0000	0.0000
NBP[1]762*	0.0001	0.0000	0.0005	0.0000	0.0000	0.0000
NBP[1]788*	0.0000	0.0000	0.0003	0.0000	0.0000	0.0000
NBP[1]825*	0.0000	0.0000	0.0003	0.0000	0.0000	0.0000
NBP[1]873*	0.0000	0.0000	0.0001	0.0000	0.0000	0.0000
NBP[1]926*	0.0000	0.0000	0.0000	0.0000	0.0000	0.0000
NBP[1]978*	0.0000	0.0000	0.0000	0.0000	0.0000	0.0000
NBP[1]1021*	0.0000	0.0000	0.0000	0.0000	0.0000	0.0000
NBP[1]1075*	0.0000	0.0000	0.0000	0.0000	0.0000	0.0000
NBP[1]1123*	0.0000	0.0000	0.0000	0.0000	0.0000	0.0000
NBP[1]1173*	0.0000	0.0000	0.0000	0.0000	0.0000	0.0000
NBP[1]1250*	0.0000	0.0000	0.0000	0.0000	0.0000	0.0000
NBP[1]1339*	0.0000	0.0000	0.0000	0.0000	0.0000	0.0000
NBP[1]1432*	0.0000	0.0000	0.0000	0.0000	0.0000	0.0000
NBP[1]1528*	0.0000	0.0000	0.0000	0.0000	0.0000	0.0000
NBP[1]1637*	0.0022	0.0000	0.0525	0.0004	0.0021	0.0001
NBP[1]1732*	0.0101	0.0000	0.2565	0.0018	0.0101	0.0006
NBP[1]1819*	0.0097	0.0000	0.2590	0.0019	0.0101	0.0006
NBP[1]1913*	0.0112	0.0000	0.3148	0.0023	0.0121	0.0008
Total	260.5541	1.0000	139.1456	1.0000	15.7094	1.0000

Liquid Phase

Phase Fraction 6.374e-002

COMPONENTS	MOLAR FLOW (kgmole/h)	MOLE FRACTION	MASS FLOW (tonne/d)	MASS FRACTION	LIQUID VOLUME FLOW (m3/h)	LIQUID VOLUME FRACTION
Methane	9.4664	0.3787	3.6448	0.0698	0.5073	0.1596
Ethane	2.5781	0.1031	1.8606	0.0356	0.2180	0.0686
Propane	2.1695	0.0868	2.2960	0.0439	0.1888	0.0594
i-Butane	0.3928	0.0157	0.5480	0.0105	0.0406	0.0128
n-Butane	0.8679	0.0347	1.2107	0.0232	0.0865	0.0272
i-Pentane	0.2450	0.0098	0.4243	0.0081	0.0284	0.0089
n-Pentane	0.3048	0.0122	0.5279	0.0101	0.0349	0.0110
n-Hexane	0.6338	0.0254	1.3108	0.0251	0.0824	0.0259
Nitrogen	0.1633	0.0065	0.1098	0.0021	0.0057	0.0018
CO2	0.7597	0.0304	0.8024	0.0154	0.0405	0.0127
H2S	0.0001	0.0000	0.0001	0.0000	0.0000	0.0000
H2O	0.0162	0.0006	0.0070	0.0001	0.0003	0.0001
NBP[1]95*	0.0915	0.0037	0.1492	0.0029	0.0091	0.0029
NBP[1]121*	0.1231	0.0049	0.2153	0.0041	0.0130	0.0041
NBP[1]147*	0.1798	0.0072	0.3460	0.0066	0.0206	0.0065
NBP[1]171*	0.3856	0.0154	0.8114	0.0155	0.0475	0.0149
NBP[1]195*	0.5613	0.0225	1.2606	0.0241	0.0729	0.0229
NBP[1]222*	0.4674	0.0187	1.1289	0.0216	0.0645	0.0203
NBP[1]248*	0.4276	0.0171	1.1106	0.0213	0.0627	0.0197
NBP[1]273*	0.3741	0.0150	1.0389	0.0199	0.0580	0.0182
NBP[1]299*	0.3138	0.0126	0.9293	0.0178	0.0513	0.0161
NBP[1]325*	0.2417	0.0097	0.7602	0.0146	0.0416	0.0131
NBP[1]351*	0.2063	0.0083	0.6900	0.0132	0.0374	0.0118

* Specified by user.

Material Stream: 5 (continued)

Fluid Package: Basis-1
Property Package: Peng-Robinson

COMPOSITION

Liquid Phase (continued)

Phase Fraction 6.374e-002

COMPONENTS	MOLAR FLOW (kgmole/h)	MOLE FRACTION	MASS FLOW (tonne/d)	MASS FRACTION	LIQUID VOLUME FLOW (m3/h)	LIQUID VOLUME FRACTION
NBP[1]377*	0.1971	0.0079	0.7030	0.0135	0.0377	0.0118
NBP[1]402*	0.1869	0.0075	0.7108	0.0136	0.0377	0.0119
NBP[1]428*	0.1825	0.0073	0.7405	0.0142	0.0389	0.0122
NBP[1]454*	0.1857	0.0074	0.8052	0.0154	0.0419	0.0132
NBP[1]480*	0.1910	0.0076	0.8849	0.0169	0.0456	0.0143
NBP[1]505*	0.1871	0.0075	0.9240	0.0177	0.0471	0.0148
NBP[1]531*	0.1819	0.0073	0.9566	0.0183	0.0484	0.0152
NBP[1]557*	0.1762	0.0071	0.9856	0.0189	0.0494	0.0155
NBP[1]582*	0.1692	0.0068	1.0048	0.0192	0.0499	0.0157
NBP[1]608*	0.1634	0.0065	1.0294	0.0197	0.0507	0.0160
NBP[1]634*	0.1605	0.0064	1.0714	0.0205	0.0524	0.0165
NBP[1]659*	0.1582	0.0063	1.1168	0.0214	0.0542	0.0170
NBP[1]685*	0.1639	0.0066	1.2209	0.0234	0.0587	0.0185
NBP[1]711*	0.1714	0.0069	1.3432	0.0257	0.0641	0.0202
NBP[1]736*	0.1696	0.0068	1.3907	0.0266	0.0659	0.0207
NBP[1]762*	0.1652	0.0066	1.4209	0.0272	0.0668	0.0210
NBP[1]788*	0.1584	0.0063	1.4420	0.0276	0.0674	0.0212
NBP[1]825*	0.2654	0.0106	2.5960	0.0497	0.1201	0.0378
NBP[1]873*	0.1830	0.0073	1.9403	0.0371	0.0887	0.0279
NBP[1]926*	0.1437	0.0058	1.6471	0.0315	0.0744	0.0234
NBP[1]978*	0.1474	0.0059	1.8524	0.0355	0.0825	0.0260
NBP[1]1021*	0.0728	0.0029	0.9655	0.0185	0.0426	0.0134
NBP[1]1075*	0.0449	0.0018	0.6310	0.0121	0.0276	0.0087
NBP[1]1123*	0.0417	0.0017	0.6267	0.0120	0.0271	0.0085
NBP[1]1173*	0.0300	0.0012	0.4772	0.0091	0.0205	0.0064
NBP[1]1250*	0.0393	0.0016	0.6767	0.0130	0.0287	0.0090
NBP[1]1339*	0.0364	0.0015	0.6999	0.0134	0.0291	0.0092
NBP[1]1432*	0.0257	0.0010	0.5397	0.0103	0.0221	0.0070
NBP[1]1528*	0.0180	0.0007	0.4082	0.0078	0.0165	0.0052
NBP[1]1637*	0.0105	0.0004	0.2521	0.0048	0.0101	0.0032
NBP[1]1732*	0.0000	0.0000	0.0000	0.0000	0.0000	0.0000
NBP[1]1819*	0.0000	0.0000	0.0000	0.0000	0.0000	0.0000
NBP[1]1913*	0.0000	0.0000	0.0000	0.0000	0.0000	0.0000
Total	24.9971	1.0000	52.2467	1.0000	3.1788	1.0000

Phase Fraction

COMPONENTS	MOLAR FLOW	MOLE FRACTION	MASS FLOW	MASS FRACTION	LIQUID VOLUME FLOW	LIQUID VOLUME FRACTION

* Specified by user.

Material Stream: 5 (continued)

Fluid Package: Basis-1
Property Package: Peng-Robinson

COMPOSITION

						Phase Fraction
COMPONENTS	MOLAR FLOW	MOLE FRACTION	MASS FLOW	MASS FRACTION	LIQUID VOLUME FLOW	LIQUID VOLUME FRACTION
Total		1.0000		1.0000		1.0000

Material Stream: 6

Fluid Package: Basis-1
Property Package: Peng-Robinson

CONDITIONS

		Overall	Vapour Phase	Liquid Phase	Aqueous Phase
Vapour / Phase Fraction		0.6693	0.6693	0.0591	0.2716
Temperature:	(F)	105.0 *	105.0	105.0	105.0
Pressure:	(psig)	2090	2090	2090	2090
Molar Flow	(MMSCFD)	7.874	5.270	0.4654	2.138
Mass Flow	(tonne/d)	237.5	140.6	50.84	46.11
Std Ideal Liq Vol Flow	(barrel/day)	3142	2391	460.2	290.7
Molar Enthalpy	(kJ/kgmole)	-1.527e+005	-9.272e+004	-2.243e+005	-2.849e+005

* Specified by user.

Material Stream: 6 (continued)

Fluid Package: Basis-1
Property Package: Peng-Robinson

CONDITIONS

	Overall	Vapour Phase	Liquid Phase	Aqueous Phase
Molar Entropy (kJ/kgmole-C)	122.8	141.7	208.3	57.54
Heat Flow (MMBtu/hr)	-56.75	-23.07	-4.928	-28.76
Liq Vol Flow @Std Cond (barrel/day)	2.954e+005 *	9.328e+005	441.5	285.7

PROPERTIES

	Overall	Vapour Phase	Liquid Phase	Aqueous Phase
Molecular Weight	25.24	22.32	91.38	18.04
Molar Density (kgmole/m3)	10.34	7.952	7.690	55.46
Mass Density (kg/m3)	260.9	177.5	702.7	1000
Act. Volume Flow (barrel/day)	5728	4983	455.0	289.9
Mass Enthalpy (kJ/kg)	-6049	-4154	-2455	-1.579e+004
Mass Entropy (kJ/kg-C)	4.864	6.347	2.279	3.190
Heat Capacity (kJ/kgmole-C)	81.84	73.70	194.3	77.43
Mass Heat Capacity (kJ/kg-C)	3.243	3.302	2.127	4.293
LHV Molar Basis (Std) (Btu/SCF)	---	---	---	9.889e-004
LHV Mass Basis (Std) (kJ/kg)	---	---	---	4.839e-002
Phase Fraction [Vol. Basis]	0.7610	0.7610	0.1464	9.251e-002
Phase Fraction [Mass Basis]	0.5919	0.5919	0.2140	0.1941
Partial Pressure of CO2 (psig)	54.66	---	---	---
Cost Based on Flow (Cost/s)	0.0000	0.0000	0.0000	0.0000
Act. Gas Flow (ACT_m3/h)	33.01	33.01	---	---
Avg. Liq. Density (kgmole/m3)	18.84	16.57	7.605	55.31
Specific Heat (kJ/kgmole-C)	81.84	73.70	194.3	77.43
Std. Gas Flow (STD_m3/h)	9272	6206	548.1	2518
Std. Ideal Liq. Mass Density (kg/m3)	475.5	369.8	694.9	997.6
Act. Liq. Flow (barrel/day)	744.9	---	455.0	289.9
Z Factor	---	0.6997	0.7235	0.1003
Watson K	15.58	16.97	12.21	8.472
User Property	---	---	---	---
Partial Pressure of H2S (psig)	-14.69	---	---	---
Cp/(Cp - R)	1.113	1.127	1.045	1.120
Cp/Cv	1.435	1.919	1.280	1.152
Heat of Vap. (kJ/kgmole)	6.038e+004	---	---	---
Kinematic Viscosity (cSt)	---	0.1151	2.090	0.6444
Liq. Mass Density (Std. Cond) (kg/m3)	5.058	0.9481	724.3	1015
Liq. Vol. Flow (Std. Cond) (barrel/day)	2.954e+005	9.328e+005	441.5	285.7
Liquid Fraction	0.3307	0.0000	1.000	1.000
Molar Volume (m3/kgmole)	9.675e-002	0.1258	0.1300	1.803e-002
Mass Heat of Vap. (kJ/kg)	2392	---	---	---
Phase Fraction [Molar Basis]	0.6693	0.6693	0.0591	0.2716
Surface Tension (dyne/cm)	---	---	9.330	69.34
Thermal Conductivity (W/m-K)	---	5.521e-002	8.535e-002	0.6322
Viscosity (cP)	---	2.043e-002	1.469	0.6446
Cv (Semi-Ideal) (kJ/kgmole-C)	73.53	65.38	186.0	69.12
Mass Cv (Semi-Ideal) (kJ/kg-C)	2.913	2.929	2.036	3.832
Cv (kJ/kgmole-C)	57.05	38.40	151.9	67.19
Mass Cv (kJ/kg-C)	2.260	1.720	1.662	3.725
Cv (Ent. Method) (kJ/kgmole-C)	---	37.84	---	66.40
Mass Cv (Ent. Method) (kJ/kg-C)	---	1.695	---	3.681
Cp/Cv (Ent. Method)	---	1.947	---	1.166
Reid VP at 37.8 C (psig)	3319	2401	369.1	---
True VP at 37.8 C (psig)	6318	2875	2053	380.5
Liq. Vol. Flow - Sum(Std. Cond) (barrel/day)	9.335e+005	9.328e+005	441.5	285.7
HHV Molar Basis (Std) (Btu/SCF)	---	---	---	46.43
HHV Mass Basis (Std) (kJ/kg)	---	---	---	2272
CO2 Loading	---	---	---	---
CO2 App ML Con (kgmole/m3)	---	---	0.2248	4.588e-002

* Specified by user.

Material Stream: 6 (continued)

Fluid Package: Basis-1
Property Package: Peng-Robinson

PROPERTIES

	Overall	Vapour Phase	Liquid Phase	Aqueous Phase
CO2 App WT Con (kgmol/kg)	---	---	3.200e-004	4.587e-005
Phase Fraction [Act. Vol. Basis]	0.8699	0.8699	7.945e-002	5.061e-002
Mass Exergy (kJ/kg)	318.7	---	---	---
Viscosity Index	-38.22	---	---	---
Ideal Gas Cp/Cv	1.212	1.234	1.058	1.328
Ideal Gas Cp (kJ/kgmole-C)	47.49	43.89	151.7	33.67
Mass Ideal Gas Cp (kJ/kg-C)	1.882	1.966	1.661	1.867
Bubble Point Pressure (psig)	6321	---	---	---

COMPOSITION

Overall Phase

Vapour Fraction 0.6693

COMPONENTS	MOLAR FLOW (kgmole/h)	MOLE FRACTION	MASS FLOW (tonne/d)	MASS FRACTION	LIQUID VOLUME FLOW (m3/h)	LIQUID VOLUME FRACTION
Methane	207.0440	0.5280	79.7181	0.3356	11.0944	0.5330
Ethane	28.8006	0.0734	20.7848	0.0875	2.4348	0.1170
Propane	15.2677	0.0389	16.1583	0.0680	1.3288	0.0638
i-Butane	2.0287	0.0052	2.8300	0.0119	0.2098	0.0101
n-Butane	3.9513	0.0101	5.5120	0.0232	0.3938	0.0189
i-Pentane	0.8495	0.0022	1.4710	0.0062	0.0983	0.0047
n-Pentane	0.9602	0.0024	1.6627	0.0070	0.1100	0.0053
n-Hexane	1.4698	0.0037	3.0399	0.0128	0.1911	0.0092
Nitrogen	5.5989	0.0143	3.7642	0.0158	0.1945	0.0093
CO2	9.4151	0.0240	9.9445	0.0419	0.5020	0.0241
H2S	0.0006	0.0000	0.0005	0.0000	0.0000	0.0000
H2O	106.6990	0.2721	46.1326	0.1942	1.9261	0.0925
NBP[1]95*	0.2883	0.0007	0.4699	0.0020	0.0288	0.0014
NBP[1]121*	0.3381	0.0009	0.5912	0.0025	0.0358	0.0017
NBP[1]147*	0.4314	0.0011	0.8304	0.0035	0.0494	0.0024
NBP[1]171*	0.8224	0.0021	1.7306	0.0073	0.1013	0.0049
NBP[1]195*	1.0758	0.0027	2.4160	0.0102	0.1398	0.0067
NBP[1]222*	0.8003	0.0020	1.9331	0.0081	0.1105	0.0053
NBP[1]248*	0.6657	0.0017	1.7287	0.0073	0.0976	0.0047
NBP[1]273*	0.5358	0.0014	1.4881	0.0063	0.0831	0.0040
NBP[1]299*	0.4185	0.0011	1.2393	0.0052	0.0684	0.0033
NBP[1]325*	0.3029	0.0008	0.9528	0.0040	0.0521	0.0025
NBP[1]351*	0.2456	0.0006	0.8214	0.0035	0.0445	0.0021
NBP[1]377*	0.2247	0.0006	0.8014	0.0034	0.0429	0.0021
NBP[1]402*	0.2061	0.0005	0.7838	0.0033	0.0416	0.0020
NBP[1]428*	0.1961	0.0005	0.7956	0.0033	0.0418	0.0020
NBP[1]454*	0.1956	0.0005	0.8480	0.0036	0.0441	0.0021
NBP[1]480*	0.1982	0.0005	0.9182	0.0039	0.0473	0.0023
NBP[1]505*	0.1920	0.0005	0.9484	0.0040	0.0484	0.0023
NBP[1]531*	0.1852	0.0005	0.9740	0.0041	0.0492	0.0024
NBP[1]557*	0.1784	0.0005	0.9978	0.0042	0.0500	0.0024
NBP[1]582*	0.1706	0.0004	1.0132	0.0043	0.0503	0.0024
NBP[1]608*	0.1643	0.0004	1.0351	0.0044	0.0510	0.0025
NBP[1]634*	0.1611	0.0004	1.0753	0.0045	0.0526	0.0025
NBP[1]659*	0.1586	0.0004	1.1194	0.0047	0.0543	0.0026
NBP[1]685*	0.1641	0.0004	1.2227	0.0051	0.0588	0.0028
NBP[1]711*	0.1715	0.0004	1.3445	0.0057	0.0642	0.0031
NBP[1]736*	0.1697	0.0004	1.3915	0.0059	0.0659	0.0032
NBP[1]762*	0.1653	0.0004	1.4214	0.0060	0.0669	0.0032
NBP[1]788*	0.1585	0.0004	1.4424	0.0061	0.0674	0.0032
NBP[1]825*	0.2655	0.0007	2.5963	0.0109	0.1201	0.0058
NBP[1]873*	0.1830	0.0005	1.9404	0.0082	0.0887	0.0043
NBP[1]926*	0.1437	0.0004	1.6472	0.0069	0.0744	0.0036

* Specified by user.

Material Stream: 6 (continued)

Fluid Package: Basis-1
Property Package: Peng-Robinson

COMPOSITION

Overall Phase (continued)

Vapour Fraction 0.6693

COMPONENTS	MOLAR FLOW (kgmole/h)	MOLE FRACTION	MASS FLOW (tonne/d)	MASS FRACTION	LIQUID VOLUME FLOW (m3/h)	LIQUID VOLUME FRACTION
NBP[1]978*	0.1474	0.0004	1.8524	0.0078	0.0825	0.0040
NBP[1]1021*	0.0728	0.0002	0.9655	0.0041	0.0426	0.0020
NBP[1]1075*	0.0449	0.0001	0.6310	0.0027	0.0276	0.0013
NBP[1]1123*	0.0417	0.0001	0.6267	0.0026	0.0271	0.0013
NBP[1]1173*	0.0300	0.0001	0.4772	0.0020	0.0205	0.0010
NBP[1]1250*	0.0393	0.0001	0.6767	0.0028	0.0287	0.0014
NBP[1]1339*	0.0364	0.0001	0.6999	0.0029	0.0291	0.0014
NBP[1]1432*	0.0257	0.0001	0.5397	0.0023	0.0221	0.0011
NBP[1]1528*	0.0180	0.0000	0.4082	0.0017	0.0165	0.0008
NBP[1]1637*	0.0127	0.0000	0.3047	0.0013	0.0122	0.0006
NBP[1]1732*	0.0101	0.0000	0.2565	0.0011	0.0101	0.0005
NBP[1]1819*	0.0097	0.0000	0.2590	0.0011	0.0101	0.0005
NBP[1]1913*	0.0112	0.0000	0.3148	0.0013	0.0121	0.0006
Total	392.1623	1.0000	237.5489	1.0000	20.8162	1.0000

Vapour Phase

Phase Fraction 0.6693

COMPONENTS	MOLAR FLOW (kgmole/h)	MOLE FRACTION	MASS FLOW (tonne/d)	MASS FRACTION	LIQUID VOLUME FLOW (m3/h)	LIQUID VOLUME FRACTION
Methane	198.5586	0.7565	76.4509	0.5437	10.6397	0.6716
Ethane	26.4727	0.1009	19.1048	0.1359	2.2380	0.1413
Propane	13.2904	0.0506	14.0656	0.1000	1.1567	0.0730
i-Butane	1.6672	0.0064	2.3257	0.0165	0.1724	0.0109
n-Butane	3.1512	0.0120	4.3958	0.0313	0.3140	0.0198
i-Pentane	0.6210	0.0024	1.0753	0.0076	0.0719	0.0045
n-Pentane	0.6756	0.0026	1.1699	0.0083	0.0774	0.0049
n-Hexane	0.8700	0.0033	1.7994	0.0128	0.1131	0.0071
Nitrogen	5.4494	0.0208	3.6637	0.0261	0.1893	0.0119
CO2	8.6492	0.0330	9.1356	0.0650	0.4612	0.0291
H2S	0.0005	0.0000	0.0004	0.0000	0.0000	0.0000
H2O	0.2615	0.0010	0.1131	0.0008	0.0047	0.0003
NBP[1]95*	0.2026	0.0008	0.3303	0.0023	0.0202	0.0013
NBP[1]121*	0.2224	0.0008	0.3889	0.0028	0.0235	0.0015
NBP[1]147*	0.2617	0.0010	0.5037	0.0036	0.0300	0.0019
NBP[1]171*	0.4563	0.0017	0.9601	0.0068	0.0562	0.0035
NBP[1]195*	0.5397	0.0021	1.2121	0.0086	0.0701	0.0044
NBP[1]222*	0.3510	0.0013	0.8477	0.0060	0.0484	0.0031
NBP[1]248*	0.2519	0.0010	0.6543	0.0047	0.0369	0.0023
NBP[1]273*	0.1719	0.0007	0.4773	0.0034	0.0266	0.0017
NBP[1]299*	0.1115	0.0004	0.3303	0.0023	0.0182	0.0012
NBP[1]325*	0.0654	0.0002	0.2057	0.0015	0.0112	0.0007
NBP[1]351*	0.0420	0.0002	0.1406	0.0010	0.0076	0.0005
NBP[1]377*	0.0296	0.0001	0.1054	0.0007	0.0056	0.0004
NBP[1]402*	0.0206	0.0001	0.0783	0.0006	0.0042	0.0003
NBP[1]428*	0.0145	0.0001	0.0590	0.0004	0.0031	0.0002
NBP[1]454*	0.0106	0.0000	0.0458	0.0003	0.0024	0.0002
NBP[1]480*	0.0077	0.0000	0.0356	0.0003	0.0018	0.0001
NBP[1]505*	0.0053	0.0000	0.0260	0.0002	0.0013	0.0001
NBP[1]531*	0.0035	0.0000	0.0185	0.0001	0.0009	0.0001
NBP[1]557*	0.0023	0.0000	0.0130	0.0001	0.0006	0.0000
NBP[1]582*	0.0015	0.0000	0.0089	0.0001	0.0004	0.0000
NBP[1]608*	0.0010	0.0000	0.0060	0.0000	0.0003	0.0000
NBP[1]634*	0.0006	0.0000	0.0041	0.0000	0.0002	0.0000
NBP[1]659*	0.0004	0.0000	0.0027	0.0000	0.0001	0.0000
NBP[1]685*	0.0003	0.0000	0.0019	0.0000	0.0001	0.0000

* Specified by user.

Material Stream: 6 (continued)

Fluid Package: Basis-1
Property Package: Peng-Robinson

COMPOSITION

Vapour Phase (continued)

Phase Fraction 0.6693

COMPONENTS	MOLAR FLOW (kgmole/h)	MOLE FRACTION	MASS FLOW (tonne/d)	MASS FRACTION	LIQUID VOLUME FLOW (m3/h)	LIQUID VOLUME FRACTION
NBP[1]711*	0.0002	0.0000	0.0013	0.0000	0.0001	0.0000
NBP[1]736*	0.0001	0.0000	0.0009	0.0000	0.0000	0.0000
NBP[1]762*	0.0001	0.0000	0.0005	0.0000	0.0000	0.0000
NBP[1]788*	0.0000	0.0000	0.0003	0.0000	0.0000	0.0000
NBP[1]825*	0.0000	0.0000	0.0003	0.0000	0.0000	0.0000
NBP[1]873*	0.0000	0.0000	0.0001	0.0000	0.0000	0.0000
NBP[1]926*	0.0000	0.0000	0.0000	0.0000	0.0000	0.0000
NBP[1]978*	0.0000	0.0000	0.0000	0.0000	0.0000	0.0000
NBP[1]1021*	0.0000	0.0000	0.0000	0.0000	0.0000	0.0000
NBP[1]1075*	0.0000	0.0000	0.0000	0.0000	0.0000	0.0000
NBP[1]1123*	0.0000	0.0000	0.0000	0.0000	0.0000	0.0000
NBP[1]1173*	0.0000	0.0000	0.0000	0.0000	0.0000	0.0000
NBP[1]1250*	0.0000	0.0000	0.0000	0.0000	0.0000	0.0000
NBP[1]1339*	0.0000	0.0000	0.0000	0.0000	0.0000	0.0000
NBP[1]1432*	0.0000	0.0000	0.0000	0.0000	0.0000	0.0000
NBP[1]1528*	0.0000	0.0000	0.0000	0.0000	0.0000	0.0000
NBP[1]1637*	0.0007	0.0000	0.0157	0.0001	0.0006	0.0000
NBP[1]1732*	0.0101	0.0000	0.2564	0.0018	0.0101	0.0006
NBP[1]1819*	0.0097	0.0000	0.2590	0.0018	0.0101	0.0006
NBP[1]1913*	0.0112	0.0000	0.3148	0.0022	0.0121	0.0008
Total	262.4735	1.0000	140.6055	1.0000	15.8421	1.0000

Liquid Phase

Phase Fraction 5.911e-002

COMPONENTS	MOLAR FLOW (kgmole/h)	MOLE FRACTION	MASS FLOW (tonne/d)	MASS FRACTION	LIQUID VOLUME FLOW (m3/h)	LIQUID VOLUME FRACTION
Methane	8.4853	0.3660	3.2671	0.0643	0.4547	0.1492
Ethane	2.3279	0.1004	1.6800	0.0330	0.1968	0.0646
Propane	1.9774	0.0853	2.0927	0.0412	0.1721	0.0565
i-Butane	0.3615	0.0156	0.5043	0.0099	0.0374	0.0123
n-Butane	0.8001	0.0345	1.1161	0.0220	0.0797	0.0262
i-Pentane	0.2285	0.0099	0.3957	0.0078	0.0264	0.0087
n-Pentane	0.2846	0.0123	0.4928	0.0097	0.0326	0.0107
n-Hexane	0.5998	0.0259	1.2406	0.0244	0.0780	0.0256
Nitrogen	0.1459	0.0063	0.0981	0.0019	0.0051	0.0017
CO2	0.6778	0.0292	0.7159	0.0141	0.0361	0.0119
H2S	0.0001	0.0000	0.0001	0.0000	0.0000	0.0000
H2O	0.0217	0.0009	0.0094	0.0002	0.0004	0.0001
NBP[1]95*	0.0856	0.0037	0.1396	0.0027	0.0086	0.0028
NBP[1]121*	0.1157	0.0050	0.2023	0.0040	0.0122	0.0040
NBP[1]147*	0.1698	0.0073	0.3267	0.0064	0.0194	0.0064
NBP[1]171*	0.3662	0.0158	0.7705	0.0152	0.0451	0.0148
NBP[1]195*	0.5360	0.0231	1.2038	0.0237	0.0697	0.0229
NBP[1]222*	0.4494	0.0194	1.0854	0.0214	0.0620	0.0204
NBP[1]248*	0.4137	0.0178	1.0745	0.0211	0.0607	0.0199
NBP[1]273*	0.3640	0.0157	1.0108	0.0199	0.0564	0.0185
NBP[1]299*	0.3070	0.0132	0.9090	0.0179	0.0502	0.0165
NBP[1]325*	0.2375	0.0102	0.7471	0.0147	0.0408	0.0134
NBP[1]351*	0.2036	0.0088	0.6809	0.0134	0.0369	0.0121
NBP[1]377*	0.1952	0.0084	0.6960	0.0137	0.0373	0.0122
NBP[1]402*	0.1855	0.0080	0.7056	0.0139	0.0374	0.0123
NBP[1]428*	0.1815	0.0078	0.7366	0.0145	0.0387	0.0127
NBP[1]454*	0.1850	0.0080	0.8022	0.0158	0.0417	0.0137
NBP[1]480*	0.1905	0.0082	0.8826	0.0174	0.0454	0.0149
NBP[1]505*	0.1867	0.0081	0.9224	0.0181	0.0470	0.0154

* Specified by user.

Material Stream: 6 (continued)

Fluid Package: Basis-1
Property Package: Peng-Robinson

COMPOSITION

Liquid Phase (continued)

Phase Fraction 5.911e-002

COMPONENTS	MOLAR FLOW (kgmole/h)	MOLE FRACTION	MASS FLOW (tonne/d)	MASS FRACTION	LIQUID VOLUME FLOW (m3/h)	LIQUID VOLUME FRACTION
NBP[1]531*	0.1817	0.0078	0.9555	0.0188	0.0483	0.0158
NBP[1]557*	0.1761	0.0076	0.9849	0.0194	0.0494	0.0162
NBP[1]582*	0.1691	0.0073	1.0043	0.0198	0.0499	0.0164
NBP[1]608*	0.1633	0.0070	1.0291	0.0202	0.0507	0.0166
NBP[1]634*	0.1605	0.0069	1.0712	0.0211	0.0524	0.0172
NBP[1]659*	0.1582	0.0068	1.1167	0.0220	0.0541	0.0178
NBP[1]685*	0.1639	0.0071	1.2208	0.0240	0.0587	0.0193
NBP[1]711*	0.1714	0.0074	1.3432	0.0264	0.0641	0.0210
NBP[1]736*	0.1696	0.0073	1.3907	0.0274	0.0659	0.0216
NBP[1]762*	0.1652	0.0071	1.4209	0.0279	0.0668	0.0219
NBP[1]788*	0.1584	0.0068	1.4420	0.0284	0.0674	0.0221
NBP[1]825*	0.2654	0.0114	2.5960	0.0511	0.1201	0.0394
NBP[1]873*	0.1830	0.0079	1.9403	0.0382	0.0887	0.0291
NBP[1]926*	0.1437	0.0062	1.6471	0.0324	0.0744	0.0244
NBP[1]978*	0.1474	0.0064	1.8524	0.0364	0.0825	0.0271
NBP[1]1021*	0.0728	0.0031	0.9655	0.0190	0.0426	0.0140
NBP[1]1075*	0.0449	0.0019	0.6310	0.0124	0.0276	0.0091
NBP[1]1123*	0.0417	0.0018	0.6267	0.0123	0.0271	0.0089
NBP[1]1173*	0.0300	0.0013	0.4772	0.0094	0.0205	0.0067
NBP[1]1250*	0.0393	0.0017	0.6767	0.0133	0.0287	0.0094
NBP[1]1339*	0.0364	0.0016	0.6999	0.0138	0.0291	0.0096
NBP[1]1432*	0.0257	0.0011	0.5397	0.0106	0.0221	0.0073
NBP[1]1528*	0.0180	0.0008	0.4082	0.0080	0.0165	0.0054
NBP[1]1637*	0.0120	0.0005	0.2890	0.0057	0.0116	0.0038
NBP[1]1732*	0.0000	0.0000	0.0001	0.0000	0.0000	0.0000
NBP[1]1819*	0.0000	0.0000	0.0000	0.0000	0.0000	0.0000
NBP[1]1913*	0.0000	0.0000	0.0000	0.0000	0.0000	0.0000
Total	23.1813	1.0000	50.8377	1.0000	3.0483	1.0000

Phase Fraction

COMPONENTS	MOLAR FLOW	MOLE FRACTION	MASS FLOW	MASS FRACTION	LIQUID VOLUME FLOW	LIQUID VOLUME FRACTION

Licensed to: PETROCHEMICAL ENGINEERIN
* Specified by user.

Material Stream: 6 (continued)

Fluid Package: Basis-1
Property Package: Peng-Robinson

COMPOSITION

COMPONENTS	MOLAR FLOW	MOLE FRACTION	MASS FLOW	MASS FRACTION	LIQUID VOLUME FLOW	LIQUID VOLUME FRACTION (Phase Fraction)
Total		1.0000		1.0000		1.0000

Material Stream: 7

Fluid Package: Basis-1
Property Package: Peng-Robinson

CONDITIONS

		Overall	Vapour Phase	Liquid Phase	Aqueous Phase
Vapour / Phase Fraction		0.6603	0.6603	0.0680	0.2717
Temperature:	(F)	94.31	94.31	94.31	94.31
Pressure:	(psig)	1550 *	1550	1550	1550
Molar Flow	(MMSCFD)	7.874	5.199	0.5353	2.139
Mass Flow	(tonne/d)	237.5	134.6	56.87	46.12
Std Ideal Liq Vol Flow	(barrel/day)	3142	2331	520.4	290.8
Molar Enthalpy	(kJ/kgmole)	-1.527e+005	-9.124e+004	-2.191e+005	-2.854e+005
Molar Entropy	(kJ/kgmole-C)	124.1	145.0	193.1	56.11
Heat Flow	(MMBtu/hr)	-56.75	-22.39	-5.536	-28.82
Liq Vol Flow @Std Cond	(barrel/day)	2.954e+005 *	9.205e+005	498.9	285.8

* Specified by user.

Material Stream: 7 (continued)

Fluid Package: Basis-1
Property Package: Peng-Robinson

PROPERTIES

	Overall	Vapour Phase	Liquid Phase	Aqueous Phase
Molecular Weight	25.24	21.65	88.88	18.04
Molar Density (kgmole/m3)	7.900	5.841	7.849	55.65
Mass Density (kg/m3)	199.4	126.5	697.6	1004
Act. Volume Flow (barrel/day)	7494	6692	512.7	289.0
Mass Enthalpy (kJ/kg)	-6049	-4214	-2465	-1.582e+004
Mass Entropy (kJ/kg-C)	4.917	6.696	2.173	3.111
Heat Capacity (kJ/kgmole-C)	78.33	67.35	188.4	77.49
Mass Heat Capacity (kJ/kg-C)	3.104	3.111	2.119	4.297
LHV Molar Basis (Std) (Btu/SCF)	---	---	---	6.011e-004
LHV Mass Basis (Std) (kJ/kg)	---	---	---	2.941e-002
Phase Fraction [Vol. Basis]	0.7419	0.7419	0.1656	9.254e-002
Phase Fraction [Mass Basis]	0.5664	0.5664	0.2394	0.1942
Partial Pressure of CO2 (psig)	37.22	---	---	---
Cost Based on Flow (Cost/s)	0.0000	0.0000	0.0000	0.0000
Act. Gas Flow (ACT_m3/h)	44.33	44.33	---	---
Avg. Liq. Density (kgmole/m3)	18.84	16.77	7.734	55.31
Specific Heat (kJ/kgmole-C)	78.33	67.35	188.4	77.49
Std. Gas Flow (STD_m3/h)	9272	6123	630.3	2519
Std. Ideal Liq. Mass Density (kg/m3)	475.5	363.1	687.4	997.6
Act. Liq. Flow (barrel/day)	801.8	---	512.7	289.0
Z Factor	---	0.7215	0.5370	7.574e-002
Watson K	15.58	17.17	12.30	8.481
User Property	---	---	---	---
Partial Pressure of H2S (psig)	-14.69	---	---	---
Cp/(Cp - R)	1.119	1.141	1.046	1.120
Cp/Cv	1.375	1.857	1.298	1.151
Heat of Vap. (kJ/kgmole)	6.253e+004	---	---	---
Kinematic Viscosity (cSt)	---	0.1301	2.102	0.7215
Liq. Mass Density (Std. Cond) (kg/m3)	5.058	0.9194	717.0	1015
Liq. Vol. Flow (Std. Cond) (barrel/day)	2.954e+005	9.205e+005	498.9	285.8
Liquid Fraction	0.3397	0.0000	1.000	1.000
Molar Volume (m3/kgmole)	0.1266	0.1712	0.1274	1.797e-002
Mass Heat of Vap. (kJ/kg)	2477	---	---	---
Phase Fraction [Molar Basis]	0.6603	0.6603	0.0680	0.2717
Surface Tension (dyne/cm)	---	---	9.984	70.37
Thermal Conductivity (W/m-K)	---	4.597e-002	8.703e-002	0.6246
Viscosity (cP)	---	1.646e-002	1.466	0.7241
Cv (Semi-Ideal) (kJ/kgmole-C)	70.02	59.04	180.1	69.18
Mass Cv (Semi-Ideal) (kJ/kg-C)	2.774	2.727	2.026	3.836
Cv (kJ/kgmole-C)	56.96	36.26	145.1	67.34
Mass Cv (kJ/kg-C)	2.257	1.675	1.633	3.734
Cv (Ent. Method) (kJ/kgmole-C)	---	---	156.1	66.60
Mass Cv (Ent. Method) (kJ/kg-C)	---	---	1.756	3.692
Cp/Cv (Ent. Method)	---	---	1.207	1.164
Reid VP at 37.8 C (psig)	3319	---	328.3	---
True VP at 37.8 C (psig)	6318	3009	1584	132.7
Liq. Vol. Flow - Sum(Std. Cond) (barrel/day)	9.213e+005	9.205e+005	498.9	285.8
HHV Molar Basis (Std) (Btu/SCF)	---	---	---	46.43
HHV Mass Basis (Std) (kJ/kg)	---	---	---	2272
CO2 Loading	---	---	---	---
CO2 App ML Con (kgmole/m3)	---	---	0.2164	4.453e-002
CO2 App WT Con (kgmol/kg)	---	---	3.102e-004	4.437e-005
Phase Fraction [Act. Vol. Basis]	0.8930	0.8930	6.842e-002	3.857e-002
Mass Exergy (kJ/kg)	302.9	---	---	---
Viscosity Index	-32.07	---	---	---
Ideal Gas Cp/Cv	1.215	1.243	1.061	1.328
Ideal Gas Cp (kJ/kgmole-C)	47.08	42.49	145.4	33.63

* Specified by user.

Material Stream: 7 (continued)

Fluid Package: Basis-1
Property Package: Peng-Robinson

PROPERTIES

	Overall	Vapour Phase	Liquid Phase	Aqueous Phase
Mass Ideal Gas Cp (kJ/kg-C)	1.865	1.962	1.635	1.865
Bubble Point Pressure (psig)	6269	---	---	---

COMPOSITION

Overall Phase

Vapour Fraction 0.6603

COMPONENTS	MOLAR FLOW (kgmole/h)	MOLE FRACTION	MASS FLOW (tonne/d)	MASS FRACTION	LIQUID VOLUME FLOW (m3/h)	LIQUID VOLUME FRACTION
Methane	207.0440	0.5280	79.7181	0.3356	11.0944	0.5330
Ethane	28.8006	0.0734	20.7848	0.0875	2.4348	0.1170
Propane	15.2677	0.0389	16.1583	0.0680	1.3288	0.0638
i-Butane	2.0287	0.0052	2.8300	0.0119	0.2098	0.0101
n-Butane	3.9513	0.0101	5.5120	0.0232	0.3938	0.0189
i-Pentane	0.8495	0.0022	1.4710	0.0062	0.0983	0.0047
n-Pentane	0.9602	0.0024	1.6627	0.0070	0.1100	0.0053
n-Hexane	1.4698	0.0037	3.0399	0.0128	0.1911	0.0092
Nitrogen	5.5989	0.0143	3.7642	0.0158	0.1945	0.0093
CO2	9.4151	0.0240	9.9445	0.0419	0.5020	0.0241
H2S	0.0006	0.0000	0.0005	0.0000	0.0000	0.0000
H2O	106.6990	0.2721	46.1326	0.1942	1.9261	0.0925
NBP[1]95*	0.2883	0.0007	0.4699	0.0020	0.0288	0.0014
NBP[1]121*	0.3381	0.0009	0.5912	0.0025	0.0358	0.0017
NBP[1]147*	0.4314	0.0011	0.8304	0.0035	0.0494	0.0024
NBP[1]171*	0.8224	0.0021	1.7306	0.0073	0.1013	0.0049
NBP[1]195*	1.0758	0.0027	2.4160	0.0102	0.1398	0.0067
NBP[1]222*	0.8003	0.0020	1.9331	0.0081	0.1105	0.0053
NBP[1]248*	0.6657	0.0017	1.7287	0.0073	0.0976	0.0047
NBP[1]273*	0.5358	0.0014	1.4881	0.0063	0.0831	0.0040
NBP[1]299*	0.4185	0.0011	1.2393	0.0052	0.0684	0.0033
NBP[1]325*	0.3029	0.0008	0.9528	0.0040	0.0521	0.0025
NBP[1]351*	0.2456	0.0006	0.8214	0.0035	0.0445	0.0021
NBP[1]377*	0.2247	0.0006	0.8014	0.0034	0.0429	0.0021
NBP[1]402*	0.2061	0.0005	0.7838	0.0033	0.0416	0.0020
NBP[1]428*	0.1961	0.0005	0.7956	0.0033	0.0418	0.0020
NBP[1]454*	0.1956	0.0005	0.8480	0.0036	0.0441	0.0021
NBP[1]480*	0.1982	0.0005	0.9182	0.0039	0.0473	0.0023
NBP[1]505*	0.1920	0.0005	0.9484	0.0040	0.0484	0.0023
NBP[1]531*	0.1852	0.0005	0.9740	0.0041	0.0492	0.0024
NBP[1]557*	0.1784	0.0005	0.9978	0.0042	0.0500	0.0024
NBP[1]582*	0.1706	0.0004	1.0132	0.0043	0.0503	0.0024
NBP[1]608*	0.1643	0.0004	1.0351	0.0044	0.0510	0.0025
NBP[1]634*	0.1611	0.0004	1.0753	0.0045	0.0526	0.0025
NBP[1]659*	0.1586	0.0004	1.1194	0.0047	0.0543	0.0026
NBP[1]685*	0.1641	0.0004	1.2227	0.0051	0.0588	0.0028
NBP[1]711*	0.1715	0.0004	1.3445	0.0057	0.0642	0.0031
NBP[1]736*	0.1697	0.0004	1.3915	0.0059	0.0659	0.0032
NBP[1]762*	0.1653	0.0004	1.4214	0.0060	0.0669	0.0032
NBP[1]788*	0.1585	0.0004	1.4424	0.0061	0.0674	0.0032
NBP[1]825*	0.2655	0.0007	2.5963	0.0109	0.1201	0.0058
NBP[1]873*	0.1830	0.0005	1.9404	0.0082	0.0887	0.0043
NBP[1]926*	0.1437	0.0004	1.6472	0.0069	0.0744	0.0036
NBP[1]978*	0.1474	0.0004	1.8524	0.0078	0.0825	0.0040
NBP[1]1021*	0.0728	0.0002	0.9655	0.0041	0.0426	0.0020
NBP[1]1075*	0.0449	0.0001	0.6310	0.0027	0.0276	0.0013
NBP[1]1123*	0.0417	0.0001	0.6267	0.0026	0.0271	0.0013
NBP[1]1173*	0.0300	0.0001	0.4772	0.0020	0.0205	0.0010
NBP[1]1250*	0.0393	0.0001	0.6767	0.0028	0.0287	0.0014

* Specified by user.

Material Stream: 7 (continued)

Fluid Package: Basis-1
Property Package: Peng-Robinson

COMPOSITION

Overall Phase (continued)

Vapour Fraction 0.6603

COMPONENTS	MOLAR FLOW (kgmole/h)	MOLE FRACTION	MASS FLOW (tonne/d)	MASS FRACTION	LIQUID VOLUME FLOW (m3/h)	LIQUID VOLUME FRACTION
NBP[1]1339*	0.0364	0.0001	0.6999	0.0029	0.0291	0.0014
NBP[1]1432*	0.0257	0.0001	0.5397	0.0023	0.0221	0.0011
NBP[1]1528*	0.0180	0.0000	0.4082	0.0017	0.0165	0.0008
NBP[1]1637*	0.0127	0.0000	0.3047	0.0013	0.0122	0.0006
NBP[1]1732*	0.0101	0.0000	0.2565	0.0011	0.0101	0.0005
NBP[1]1819*	0.0097	0.0000	0.2590	0.0011	0.0101	0.0005
NBP[1]1913*	0.0112	0.0000	0.3148	0.0013	0.0121	0.0006
Total	392.1623	1.0000	237.5489	1.0000	20.8162	1.0000

Vapour Phase

Phase Fraction 0.6603

COMPONENTS	MOLAR FLOW (kgmole/h)	MOLE FRACTION	MASS FLOW (tonne/d)	MASS FRACTION	LIQUID VOLUME FLOW (m3/h)	LIQUID VOLUME FRACTION
Methane	198.6527	0.7671	76.4872	0.5684	10.6447	0.6893
Ethane	25.9992	0.1004	18.7630	0.1394	2.1980	0.1423
Propane	12.5726	0.0486	13.3059	0.0989	1.0942	0.0709
i-Butane	1.5010	0.0058	2.0938	0.0156	0.1552	0.0101
n-Butane	2.7651	0.0107	3.8572	0.0287	0.2756	0.0178
i-Pentane	0.4998	0.0019	0.8655	0.0064	0.0578	0.0037
n-Pentane	0.5250	0.0020	0.9091	0.0068	0.0602	0.0039
n-Hexane	0.5718	0.0022	1.1826	0.0088	0.0744	0.0048
Nitrogen	5.4701	0.0211	3.6776	0.0273	0.1900	0.0123
CO2	8.5949	0.0332	9.0782	0.0675	0.4583	0.0297
H2S	0.0005	0.0000	0.0004	0.0000	0.0000	0.0000
H2O	0.2176	0.0008	0.0941	0.0007	0.0039	0.0003
NBP[1]95*	0.1581	0.0006	0.2577	0.0019	0.0158	0.0010
NBP[1]121*	0.1627	0.0006	0.2845	0.0021	0.0172	0.0011
NBP[1]147*	0.1773	0.0007	0.3413	0.0025	0.0203	0.0013
NBP[1]171*	0.2852	0.0011	0.6001	0.0045	0.0351	0.0023
NBP[1]195*	0.3090	0.0012	0.6940	0.0052	0.0402	0.0026
NBP[1]222*	0.1798	0.0007	0.4343	0.0032	0.0248	0.0016
NBP[1]248*	0.1155	0.0004	0.3000	0.0022	0.0169	0.0011
NBP[1]273*	0.0703	0.0003	0.1953	0.0015	0.0109	0.0007
NBP[1]299*	0.0407	0.0002	0.1204	0.0009	0.0066	0.0004
NBP[1]325*	0.0212	0.0001	0.0666	0.0005	0.0036	0.0002
NBP[1]351*	0.0121	0.0000	0.0404	0.0003	0.0022	0.0001
NBP[1]377*	0.0075	0.0000	0.0269	0.0002	0.0014	0.0001
NBP[1]402*	0.0047	0.0000	0.0178	0.0001	0.0009	0.0001
NBP[1]428*	0.0029	0.0000	0.0119	0.0001	0.0006	0.0000
NBP[1]454*	0.0019	0.0000	0.0083	0.0001	0.0004	0.0000
NBP[1]480*	0.0012	0.0000	0.0058	0.0000	0.0003	0.0000
NBP[1]505*	0.0008	0.0000	0.0038	0.0000	0.0002	0.0000
NBP[1]531*	0.0005	0.0000	0.0024	0.0000	0.0001	0.0000
NBP[1]557*	0.0003	0.0000	0.0015	0.0000	0.0001	0.0000
NBP[1]582*	0.0002	0.0000	0.0009	0.0000	0.0000	0.0000
NBP[1]608*	0.0001	0.0000	0.0005	0.0000	0.0000	0.0000
NBP[1]634*	0.0000	0.0000	0.0003	0.0000	0.0000	0.0000
NBP[1]659*	0.0000	0.0000	0.0002	0.0000	0.0000	0.0000
NBP[1]685*	0.0000	0.0000	0.0001	0.0000	0.0000	0.0000
NBP[1]711*	0.0000	0.0000	0.0001	0.0000	0.0000	0.0000
NBP[1]736*	0.0000	0.0000	0.0000	0.0000	0.0000	0.0000
NBP[1]762*	0.0000	0.0000	0.0000	0.0000	0.0000	0.0000
NBP[1]788*	0.0000	0.0000	0.0000	0.0000	0.0000	0.0000
NBP[1]825*	0.0000	0.0000	0.0000	0.0000	0.0000	0.0000
NBP[1]873*	0.0000	0.0000	0.0000	0.0000	0.0000	0.0000

* Specified by user.

Material Stream: 7 (continued)

Fluid Package: Basis-1
Property Package: Peng-Robinson

COMPOSITION

Vapour Phase (continued)

Phase Fraction 0.6603

COMPONENTS	MOLAR FLOW (kgmole/h)	MOLE FRACTION	MASS FLOW (tonne/d)	MASS FRACTION	LIQUID VOLUME FLOW (m3/h)	LIQUID VOLUME FRACTION
NBP[1]926*	0.0000	0.0000	0.0000	0.0000	0.0000	0.0000
NBP[1]978*	0.0000	0.0000	0.0000	0.0000	0.0000	0.0000
NBP[1]1021*	0.0000	0.0000	0.0000	0.0000	0.0000	0.0000
NBP[1]1075*	0.0000	0.0000	0.0000	0.0000	0.0000	0.0000
NBP[1]1123*	0.0000	0.0000	0.0000	0.0000	0.0000	0.0000
NBP[1]1173*	0.0000	0.0000	0.0000	0.0000	0.0000	0.0000
NBP[1]1250*	0.0000	0.0000	0.0000	0.0000	0.0000	0.0000
NBP[1]1339*	0.0000	0.0000	0.0000	0.0000	0.0000	0.0000
NBP[1]1432*	0.0000	0.0000	0.0000	0.0000	0.0000	0.0000
NBP[1]1528*	0.0000	0.0000	0.0000	0.0000	0.0000	0.0000
NBP[1]1637*	0.0000	0.0000	0.0001	0.0000	0.0000	0.0000
NBP[1]1732*	0.0101	0.0000	0.2552	0.0019	0.0101	0.0007
NBP[1]1819*	0.0097	0.0000	0.2590	0.0019	0.0101	0.0007
NBP[1]1913*	0.0112	0.0000	0.3148	0.0023	0.0121	0.0008
Total	258.9532	1.0000	134.5588	1.0000	15.4427	1.0000

Liquid Phase

Phase Fraction 6.798e-002

COMPONENTS	MOLAR FLOW (kgmole/h)	MOLE FRACTION	MASS FLOW (tonne/d)	MASS FRACTION	LIQUID VOLUME FLOW (m3/h)	LIQUID VOLUME FRACTION
Methane	8.3912	0.3148	3.2309	0.0568	0.4496	0.1304
Ethane	2.8014	0.1051	2.0217	0.0356	0.2368	0.0687
Propane	2.6951	0.1011	2.8523	0.0502	0.2346	0.0680
i-Butane	0.5277	0.0198	0.7362	0.0129	0.0546	0.0158
n-Butane	1.1862	0.0445	1.6547	0.0291	0.1182	0.0343
i-Pentane	0.3497	0.0131	0.6055	0.0106	0.0405	0.0117
n-Pentane	0.4352	0.0163	0.7536	0.0133	0.0499	0.0145
n-Hexane	0.8980	0.0337	1.8573	0.0327	0.1168	0.0339
Nitrogen	0.1259	0.0047	0.0847	0.0015	0.0044	0.0013
CO2	0.7350	0.0276	0.7763	0.0137	0.0392	0.0114
H2S	0.0001	0.0000	0.0001	0.0000	0.0000	0.0000
H2O	0.0198	0.0007	0.0086	0.0002	0.0004	0.0001
NBP[1]95*	0.1302	0.0049	0.2123	0.0037	0.0130	0.0038
NBP[1]121*	0.1754	0.0066	0.3067	0.0054	0.0186	0.0054
NBP[1]147*	0.2541	0.0095	0.4892	0.0086	0.0291	0.0084
NBP[1]171*	0.5373	0.0202	1.1305	0.0199	0.0662	0.0192
NBP[1]195*	0.7668	0.0288	1.7220	0.0303	0.0996	0.0289
NBP[1]222*	0.6205	0.0233	1.4987	0.0264	0.0857	0.0249
NBP[1]248*	0.5502	0.0206	1.4288	0.0251	0.0807	0.0234
NBP[1]273*	0.4655	0.0175	1.2928	0.0227	0.0722	0.0209
NBP[1]299*	0.3779	0.0142	1.1189	0.0197	0.0618	0.0179
NBP[1]325*	0.2817	0.0106	0.8862	0.0156	0.0485	0.0141
NBP[1]351*	0.2335	0.0088	0.7810	0.0137	0.0423	0.0123
NBP[1]377*	0.2172	0.0081	0.7745	0.0136	0.0415	0.0120
NBP[1]402*	0.2014	0.0076	0.7661	0.0135	0.0406	0.0118
NBP[1]428*	0.1931	0.0072	0.7836	0.0138	0.0412	0.0119
NBP[1]454*	0.1937	0.0073	0.8397	0.0148	0.0437	0.0127
NBP[1]480*	0.1969	0.0074	0.9124	0.0160	0.0470	0.0136
NBP[1]505*	0.1912	0.0072	0.9446	0.0166	0.0482	0.0140
NBP[1]531*	0.1848	0.0069	0.9716	0.0171	0.0491	0.0142
NBP[1]557*	0.1781	0.0067	0.9963	0.0175	0.0499	0.0145
NBP[1]582*	0.1704	0.0064	1.0123	0.0178	0.0503	0.0146
NBP[1]608*	0.1642	0.0062	1.0345	0.0182	0.0510	0.0148
NBP[1]634*	0.1610	0.0060	1.0750	0.0189	0.0525	0.0152
NBP[1]659*	0.1586	0.0059	1.1192	0.0197	0.0543	0.0157

* Specified by user.

Material Stream: 7 (continued)

Fluid Package: Basis-1
Property Package: Peng-Robinson

COMPOSITION

Liquid Phase (continued)

Phase Fraction 6.798e-002

COMPONENTS	MOLAR FLOW (kgmole/h)	MOLE FRACTION	MASS FLOW (tonne/d)	MASS FRACTION	LIQUID VOLUME FLOW (m3/h)	LIQUID VOLUME FRACTION
NBP[1]685*	0.1641	0.0062	1.2226	0.0215	0.0588	0.0171
NBP[1]711*	0.1715	0.0064	1.3444	0.0236	0.0642	0.0186
NBP[1]736*	0.1697	0.0064	1.3915	0.0245	0.0659	0.0191
NBP[1]762*	0.1653	0.0062	1.4214	0.0250	0.0669	0.0194
NBP[1]788*	0.1585	0.0059	1.4424	0.0254	0.0674	0.0195
NBP[1]825*	0.2655	0.0100	2.5963	0.0457	0.1201	0.0348
NBP[1]873*	0.1830	0.0069	1.9404	0.0341	0.0887	0.0257
NBP[1]926*	0.1437	0.0054	1.6472	0.0290	0.0744	0.0216
NBP[1]978*	0.1474	0.0055	1.8524	0.0326	0.0825	0.0239
NBP[1]1021*	0.0728	0.0027	0.9655	0.0170	0.0426	0.0124
NBP[1]1075*	0.0449	0.0017	0.6310	0.0111	0.0276	0.0080
NBP[1]1123*	0.0417	0.0016	0.6267	0.0110	0.0271	0.0079
NBP[1]1173*	0.0300	0.0011	0.4772	0.0084	0.0205	0.0059
NBP[1]1250*	0.0393	0.0015	0.6767	0.0119	0.0287	0.0083
NBP[1]1339*	0.0364	0.0014	0.6999	0.0123	0.0291	0.0085
NBP[1]1432*	0.0257	0.0010	0.5397	0.0095	0.0221	0.0064
NBP[1]1528*	0.0180	0.0007	0.4082	0.0072	0.0165	0.0048
NBP[1]1637*	0.0126	0.0005	0.3045	0.0054	0.0122	0.0035
NBP[1]1732*	0.0001	0.0000	0.0013	0.0000	0.0001	0.0000
NBP[1]1819*	0.0000	0.0000	0.0000	0.0000	0.0000	0.0000
NBP[1]1913*	0.0000	0.0000	0.0000	0.0000	0.0000	0.0000
Total	26.6595	1.0000	56.8682	1.0000	3.4471	1.0000

Phase Fraction

COMPONENTS	MOLAR FLOW	MOLE FRACTION	MASS FLOW	MASS FRACTION	LIQUID VOLUME FLOW	LIQUID VOLUME FRACTION

* Specified by user.

Material Stream: 7 (continued)

Fluid Package: Basis-1
Property Package: Peng-Robinson

COMPOSITION

COMPONENTS	MOLAR FLOW	MOLE FRACTION	MASS FLOW	MASS FRACTION	LIQUID VOLUME FLOW	LIQUID VOLUME FRACTION (Phase Fraction)
Total		1.0000		1.0000		1.0000

Material Stream: 8

Fluid Package: Basis-1
Property Package: Peng-Robinson

CONDITIONS

		Overall	Vapour Phase	Liquid Phase	Aqueous Phase
Vapour / Phase Fraction		0.6673	0.6673	0.0613	0.2714
Temperature:	(F)	102.8	102.8	102.8	102.8
Pressure:	(psig)	1240	1240	1240	1240
Molar Flow	(MMSCFD)	7.874	5.254	0.4829	2.137
Mass Flow	(tonne/d)	237.5	135.2	56.30	46.06
Std Ideal Liq Vol Flow	(barrel/day)	3142	2350	501.5	290.4
Molar Enthalpy	(kJ/kgmole)	-1.519e+005	-9.031e+004	-2.335e+005	-2.850e+005
Molar Entropy	(kJ/kgmole-C)	127.5	149.1	203.2	57.30
Heat Flow	(MMBtu/hr)	-56.48	-22.40	-5.323	-28.75
Liq Vol Flow @Std Cond	(barrel/day)	2.954e+005 *	9.302e+005	479.9	285.4

PROPERTIES

		Overall	Vapour Phase	Liquid Phase	Aqueous Phase
Molecular Weight		25.24	21.53	97.53	18.03
Molar Density	(kgmole/m3)	5.950	4.312	7.305	55.42
Mass Density	(kg/m3)	150.2	92.81	712.4	999.4
Act. Volume Flow	(barrel/day)	9949	9162	497.0	289.9
Mass Enthalpy	(kJ/kg)	-6020	-4195	-2394	-1.581e+004
Mass Entropy	(kJ/kg-C)	5.051	6.925	2.083	3.178

* Specified by user.

Material Stream: 8 (continued)

Fluid Package: Basis-1
Property Package: Peng-Robinson

PROPERTIES

	Overall	Vapour Phase	Liquid Phase	Aqueous Phase
Heat Capacity (kJ/kgmole-C)	73.94	60.30	206.4	77.55
Mass Heat Capacity (kJ/kg-C)	2.930	2.801	2.116	4.301
LHV Molar Basis (Std) (Btu/SCF)	---	---	---	6.560e-004
LHV Mass Basis (Std) (kJ/kg)	---	---	---	3.211e-002
Phase Fraction [Vol. Basis]	0.7480	0.7480	0.1596	9.242e-002
Phase Fraction [Mass Basis]	0.5691	0.5691	0.2370	0.1939
Partial Pressure of CO2 (psig)	27.31	---	---	---
Cost Based on Flow (Cost/s)	0.0000	0.0000	0.0000	0.0000
Act. Gas Flow (ACT_m3/h)	60.69	60.69	---	---
Avg. Liq. Density (kgmole/m3)	18.84	16.81	7.240	55.32
Specific Heat (kJ/kgmole-C)	73.94	60.30	206.4	77.55
Std. Gas Flow (STD_m3/h)	9272	6187	568.7	2517
Std. Ideal Liq. Mass Density (kg/m3)	475.5	361.8	706.1	997.6
Act. Liq. Flow (barrel/day)	786.9	---	497.0	289.9
Z Factor	---	0.7723	0.4558	6.008e-002
Watson K	15.58	17.21	12.20	8.487
User Property	---	---	---	---
Partial Pressure of H2S (psig)	-14.69	---	---	---
Cp/(Cp - R)	1.127	1.160	1.042	1.120
Cp/Cv	1.296	1.683	1.277	1.153
Heat of Vap. (kJ/kgmole)	6.371e+004	---	---	---
Kinematic Viscosity (cSt)	---	0.1598	2.749	0.6602
Liq. Mass Density (Std. Cond) (kg/m3)	5.058	0.9141	737.9	1015
Liq. Vol. Flow (Std. Cond) (barrel/day)	2.954e+005	9.302e+005	479.9	285.4
Liquid Fraction	0.3327	0.0000	1.000	1.000
Molar Volume (m3/kgmole)	0.1681	0.2319	0.1369	1.804e-002
Mass Heat of Vap. (kJ/kg)	2524	---	---	---
Phase Fraction [Molar Basis]	0.6673	0.6673	0.0613	0.2714
Surface Tension (dyne/cm)	---	---	11.01	69.56
Thermal Conductivity (W/m-K)	---	4.130e-002	8.916e-002	0.6307
Viscosity (cP)	---	1.483e-002	1.959	0.6598
Cv (Semi-Ideal) (kJ/kgmole-C)	65.63	51.99	198.0	69.24
Mass Cv (Semi-Ideal) (kJ/kg-C)	2.600	2.415	2.031	3.840
Cv (kJ/kgmole-C)	57.07	35.83	161.5	67.24
Mass Cv (kJ/kg-C)	2.261	1.664	1.656	3.729
Cv (Ent. Method) (kJ/kgmole-C)	---	---	172.3	66.53
Mass Cv (Ent. Method) (kJ/kg-C)	---	---	1.767	3.689
Cp/Cv (Ent. Method)	---	---	1.198	1.166
Reid VP at 37.8 C (psig)	3319	---	255.1	---
True VP at 37.8 C (psig)	6318	2770	1227	120.1
Liq. Vol. Flow - Sum(Std. Cond) (barrel/day)	9.310e+005	9.302e+005	479.9	285.4
HHV Molar Basis (Std) (Btu/SCF)	---	---	---	46.43
HHV Mass Basis (Std) (kJ/kg)	---	---	---	2273
CO2 Loading	---	---	---	---
CO2 App ML Con (kgmole/m3)	---	---	0.1771	3.720e-002
CO2 App WT Con (kgmol/kg)	---	---	2.485e-004	3.722e-005
Phase Fraction [Act. Vol. Basis]	0.9209	0.9209	4.996e-002	2.914e-002
Mass Exergy (kJ/kg)	292.0	---	---	---
Viscosity Index	-28.79	---	---	---
Ideal Gas Cp/Cv	1.213	1.243	1.055	1.328
Ideal Gas Cp (kJ/kgmole-C)	47.40	42.58	160.7	33.66
Mass Ideal Gas Cp (kJ/kg-C)	1.878	1.978	1.648	1.867
Bubble Point Pressure (psig)	6298	---	---	---

* Specified by user.

Material Stream: 8 (continued)

Fluid Package: Basis-1
Property Package: Peng-Robinson

COMPOSITION

Overall Phase

Vapour Fraction 0.6673

COMPONENTS	MOLAR FLOW (kgmole/h)	MOLE FRACTION	MASS FLOW (tonne/d)	MASS FRACTION	LIQUID VOLUME FLOW (m3/h)	LIQUID VOLUME FRACTION
Methane	207.0440	0.5280	79.7181	0.3356	11.0944	0.5330
Ethane	28.8006	0.0734	20.7848	0.0875	2.4348	0.1170
Propane	15.2677	0.0389	16.1583	0.0680	1.3288	0.0638
i-Butane	2.0287	0.0052	2.8300	0.0119	0.2098	0.0101
n-Butane	3.9513	0.0101	5.5120	0.0232	0.3938	0.0189
i-Pentane	0.8495	0.0022	1.4710	0.0062	0.0983	0.0047
n-Pentane	0.9602	0.0024	1.6627	0.0070	0.1100	0.0053
n-Hexane	1.4698	0.0037	3.0399	0.0128	0.1911	0.0092
Nitrogen	5.5989	0.0143	3.7642	0.0158	0.1945	0.0093
CO2	9.4151	0.0240	9.9445	0.0419	0.5020	0.0241
H2S	0.0006	0.0000	0.0005	0.0000	0.0000	0.0000
H2O	106.6990	0.2721	46.1326	0.1942	1.9261	0.0925
NBP[1]95*	0.2883	0.0007	0.4699	0.0020	0.0288	0.0014
NBP[1]121*	0.3381	0.0009	0.5912	0.0025	0.0358	0.0017
NBP[1]147*	0.4314	0.0011	0.8304	0.0035	0.0494	0.0024
NBP[1]171*	0.8224	0.0021	1.7306	0.0073	0.1013	0.0049
NBP[1]195*	1.0758	0.0027	2.4160	0.0102	0.1398	0.0067
NBP[1]222*	0.8003	0.0020	1.9331	0.0081	0.1105	0.0053
NBP[1]248*	0.6657	0.0017	1.7287	0.0073	0.0976	0.0047
NBP[1]273*	0.5358	0.0014	1.4881	0.0063	0.0831	0.0040
NBP[1]299*	0.4185	0.0011	1.2393	0.0052	0.0684	0.0033
NBP[1]325*	0.3029	0.0008	0.9528	0.0040	0.0521	0.0025
NBP[1]351*	0.2456	0.0006	0.8214	0.0035	0.0445	0.0021
NBP[1]377*	0.2247	0.0006	0.8014	0.0034	0.0429	0.0021
NBP[1]402*	0.2061	0.0005	0.7838	0.0033	0.0416	0.0020
NBP[1]428*	0.1961	0.0005	0.7956	0.0033	0.0418	0.0020
NBP[1]454*	0.1956	0.0005	0.8480	0.0036	0.0441	0.0021
NBP[1]480*	0.1982	0.0005	0.9182	0.0039	0.0473	0.0023
NBP[1]505*	0.1920	0.0005	0.9484	0.0040	0.0484	0.0023
NBP[1]531*	0.1852	0.0005	0.9740	0.0041	0.0492	0.0024
NBP[1]557*	0.1784	0.0005	0.9978	0.0042	0.0500	0.0024
NBP[1]582*	0.1706	0.0004	1.0132	0.0043	0.0503	0.0024
NBP[1]608*	0.1643	0.0004	1.0351	0.0044	0.0510	0.0025
NBP[1]634*	0.1611	0.0004	1.0753	0.0045	0.0526	0.0025
NBP[1]659*	0.1586	0.0004	1.1194	0.0047	0.0543	0.0026
NBP[1]685*	0.1641	0.0004	1.2227	0.0051	0.0588	0.0028
NBP[1]711*	0.1715	0.0004	1.3445	0.0057	0.0642	0.0031
NBP[1]736*	0.1697	0.0004	1.3915	0.0059	0.0659	0.0032
NBP[1]762*	0.1653	0.0004	1.4214	0.0060	0.0669	0.0032
NBP[1]788*	0.1585	0.0004	1.4424	0.0061	0.0674	0.0032
NBP[1]825*	0.2655	0.0007	2.5963	0.0109	0.1201	0.0058
NBP[1]873*	0.1830	0.0005	1.9404	0.0082	0.0887	0.0043
NBP[1]926*	0.1437	0.0004	1.6472	0.0069	0.0744	0.0036
NBP[1]978*	0.1474	0.0004	1.8524	0.0078	0.0825	0.0040
NBP[1]1021*	0.0728	0.0002	0.9655	0.0041	0.0426	0.0020
NBP[1]1075*	0.0449	0.0001	0.6310	0.0027	0.0276	0.0013
NBP[1]1123*	0.0417	0.0001	0.6267	0.0026	0.0271	0.0013
NBP[1]1173*	0.0300	0.0001	0.4772	0.0020	0.0205	0.0010
NBP[1]1250*	0.0393	0.0001	0.6767	0.0028	0.0287	0.0014
NBP[1]1339*	0.0364	0.0001	0.6999	0.0029	0.0291	0.0014
NBP[1]1432*	0.0257	0.0001	0.5397	0.0023	0.0221	0.0011
NBP[1]1528*	0.0180	0.0000	0.4082	0.0017	0.0165	0.0008
NBP[1]1637*	0.0127	0.0000	0.3047	0.0013	0.0122	0.0006
NBP[1]1732*	0.0101	0.0000	0.2565	0.0011	0.0101	0.0005

* Specified by user.

Material Stream: 8 (continued)

Fluid Package: Basis-1
Property Package: Peng-Robinson

COMPOSITION

Overall Phase (continued)

Vapour Fraction 0.6673

COMPONENTS	MOLAR FLOW (kgmole/h)	MOLE FRACTION	MASS FLOW (tonne/d)	MASS FRACTION	LIQUID VOLUME FLOW (m3/h)	LIQUID VOLUME FRACTION
NBP[1]1819*	0.0097	0.0000	0.2590	0.0011	0.0101	0.0005
NBP[1]1913*	0.0112	0.0000	0.3148	0.0013	0.0121	0.0006
Total	392.1623	1.0000	237.5489	1.0000	20.8162	1.0000

Vapour Phase

Phase Fraction 0.6673

COMPONENTS	MOLAR FLOW (kgmole/h)	MOLE FRACTION	MASS FLOW (tonne/d)	MASS FRACTION	LIQUID VOLUME FLOW (m3/h)	LIQUID VOLUME FRACTION
Methane	200.7596	0.7672	77.2984	0.5718	10.7576	0.6909
Ethane	26.4364	0.1010	19.0786	0.1411	2.2350	0.1435
Propane	12.7748	0.0488	13.5200	0.1000	1.1118	0.0714
i-Butane	1.5087	0.0058	2.1046	0.0156	0.1560	0.0100
n-Butane	2.7665	0.0106	3.8592	0.0285	0.2757	0.0177
i-Pentane	0.4845	0.0019	0.8389	0.0062	0.0561	0.0036
n-Pentane	0.5039	0.0019	0.8726	0.0065	0.0577	0.0037
n-Hexane	0.5113	0.0020	1.0574	0.0078	0.0665	0.0043
Nitrogen	5.5086	0.0211	3.7035	0.0274	0.1914	0.0123
CO2	8.7607	0.0335	9.2533	0.0684	0.4671	0.0300
H2S	0.0005	0.0000	0.0004	0.0000	0.0000	0.0000
H2O	0.3139	0.0012	0.1357	0.0010	0.0057	0.0004
NBP[1]95*	0.1520	0.0006	0.2478	0.0018	0.0152	0.0010
NBP[1]121*	0.1527	0.0006	0.2670	0.0020	0.0162	0.0010
NBP[1]147*	0.1615	0.0006	0.3109	0.0023	0.0185	0.0012
NBP[1]171*	0.2512	0.0010	0.5286	0.0039	0.0309	0.0020
NBP[1]195*	0.2619	0.0010	0.5882	0.0044	0.0340	0.0022
NBP[1]222*	0.1448	0.0006	0.3498	0.0026	0.0200	0.0013
NBP[1]248*	0.0883	0.0003	0.2294	0.0017	0.0130	0.0008
NBP[1]273*	0.0509	0.0002	0.1415	0.0010	0.0079	0.0005
NBP[1]299*	0.0279	0.0001	0.0825	0.0006	0.0046	0.0003
NBP[1]325*	0.0137	0.0001	0.0430	0.0003	0.0024	0.0002
NBP[1]351*	0.0074	0.0000	0.0246	0.0002	0.0013	0.0001
NBP[1]377*	0.0043	0.0000	0.0154	0.0001	0.0008	0.0001
NBP[1]402*	0.0025	0.0000	0.0096	0.0001	0.0005	0.0000
NBP[1]428*	0.0015	0.0000	0.0060	0.0000	0.0003	0.0000
NBP[1]454*	0.0009	0.0000	0.0039	0.0000	0.0002	0.0000
NBP[1]480*	0.0006	0.0000	0.0026	0.0000	0.0001	0.0000
NBP[1]505*	0.0003	0.0000	0.0016	0.0000	0.0001	0.0000
NBP[1]531*	0.0002	0.0000	0.0009	0.0000	0.0000	0.0000
NBP[1]557*	0.0001	0.0000	0.0005	0.0000	0.0000	0.0000
NBP[1]582*	0.0001	0.0000	0.0003	0.0000	0.0000	0.0000
NBP[1]608*	0.0000	0.0000	0.0002	0.0000	0.0000	0.0000
NBP[1]634*	0.0000	0.0000	0.0001	0.0000	0.0000	0.0000
NBP[1]659*	0.0000	0.0000	0.0001	0.0000	0.0000	0.0000
NBP[1]685*	0.0000	0.0000	0.0000	0.0000	0.0000	0.0000
NBP[1]711*	0.0000	0.0000	0.0000	0.0000	0.0000	0.0000
NBP[1]736*	0.0000	0.0000	0.0000	0.0000	0.0000	0.0000
NBP[1]762*	0.0000	0.0000	0.0000	0.0000	0.0000	0.0000
NBP[1]788*	0.0000	0.0000	0.0000	0.0000	0.0000	0.0000
NBP[1]825*	0.0000	0.0000	0.0000	0.0000	0.0000	0.0000
NBP[1]873*	0.0000	0.0000	0.0000	0.0000	0.0000	0.0000
NBP[1]926*	0.0000	0.0000	0.0000	0.0000	0.0000	0.0000
NBP[1]978*	0.0000	0.0000	0.0000	0.0000	0.0000	0.0000
NBP[1]1021*	0.0000	0.0000	0.0000	0.0000	0.0000	0.0000
NBP[1]1075*	0.0000	0.0000	0.0000	0.0000	0.0000	0.0000
NBP[1]1123*	0.0000	0.0000	0.0000	0.0000	0.0000	0.0000

* Specified by user.

Material Stream: 8 (continued)

Fluid Package: Basis-1
Property Package: Peng-Robinson

COMPOSITION

Vapour Phase (continued)

Phase Fraction 0.6673

COMPONENTS	MOLAR FLOW (kgmole/h)	MOLE FRACTION	MASS FLOW (tonne/d)	MASS FRACTION	LIQUID VOLUME FLOW (m3/h)	LIQUID VOLUME FRACTION
NBP[1]1173*	0.0000	0.0000	0.0000	0.0000	0.0000	0.0000
NBP[1]1250*	0.0000	0.0000	0.0000	0.0000	0.0000	0.0000
NBP[1]1339*	0.0000	0.0000	0.0000	0.0000	0.0000	0.0000
NBP[1]1432*	0.0000	0.0000	0.0000	0.0000	0.0000	0.0000
NBP[1]1528*	0.0000	0.0000	0.0000	0.0000	0.0000	0.0000
NBP[1]1637*	0.0000	0.0000	0.0000	0.0000	0.0000	0.0000
NBP[1]1732*	0.0015	0.0000	0.0371	0.0003	0.0015	0.0001
NBP[1]1819*	0.0097	0.0000	0.2590	0.0019	0.0101	0.0006
NBP[1]1913*	0.0112	0.0000	0.3148	0.0023	0.0121	0.0008
Total	261.6746	1.0000	135.1879	1.0000	15.5704	1.0000

Liquid Phase

Phase Fraction 6.133e-002

COMPONENTS	MOLAR FLOW (kgmole/h)	MOLE FRACTION	MASS FLOW (tonne/d)	MASS FRACTION	LIQUID VOLUME FLOW (m3/h)	LIQUID VOLUME FRACTION
Methane	6.2843	0.2613	2.4196	0.0430	0.3367	0.1014
Ethane	2.3642	0.0983	1.7062	0.0303	0.1999	0.0602
Propane	2.4929	0.1036	2.6383	0.0469	0.2170	0.0653
i-Butane	0.5200	0.0216	0.7254	0.0129	0.0538	0.0162
n-Butane	1.1848	0.0493	1.6528	0.0294	0.1181	0.0355
i-Pentane	0.3650	0.0152	0.6321	0.0112	0.0422	0.0127
n-Pentane	0.4563	0.0190	0.7902	0.0140	0.0523	0.0157
n-Hexane	0.9585	0.0399	1.9825	0.0352	0.1247	0.0375
Nitrogen	0.0882	0.0037	0.0593	0.0011	0.0031	0.0009
CO2	0.5830	0.0242	0.6158	0.0109	0.0311	0.0094
H2S	0.0001	0.0000	0.0001	0.0000	0.0000	0.0000
H2O	0.0223	0.0009	0.0096	0.0002	0.0004	0.0001
NBP[1]95*	0.1363	0.0057	0.2222	0.0039	0.0136	0.0041
NBP[1]121*	0.1854	0.0077	0.3241	0.0058	0.0196	0.0059
NBP[1]147*	0.2699	0.0112	0.5195	0.0092	0.0309	0.0093
NBP[1]171*	0.5712	0.0238	1.2020	0.0214	0.0704	0.0212
NBP[1]195*	0.8139	0.0338	1.8278	0.0325	0.1058	0.0318
NBP[1]222*	0.6555	0.0273	1.5833	0.0281	0.0905	0.0272
NBP[1]248*	0.5773	0.0240	1.4994	0.0266	0.0847	0.0255
NBP[1]273*	0.4849	0.0202	1.3466	0.0239	0.0752	0.0226
NBP[1]299*	0.3906	0.0162	1.1567	0.0205	0.0639	0.0192
NBP[1]325*	0.2892	0.0120	0.9097	0.0162	0.0497	0.0150
NBP[1]351*	0.2383	0.0099	0.7968	0.0142	0.0431	0.0130
NBP[1]377*	0.2204	0.0092	0.7860	0.0140	0.0421	0.0127
NBP[1]402*	0.2036	0.0085	0.7743	0.0138	0.0411	0.0124
NBP[1]428*	0.1946	0.0081	0.7895	0.0140	0.0415	0.0125
NBP[1]454*	0.1947	0.0081	0.8441	0.0150	0.0439	0.0132
NBP[1]480*	0.1976	0.0082	0.9156	0.0163	0.0471	0.0142
NBP[1]505*	0.1917	0.0080	0.9468	0.0168	0.0483	0.0145
NBP[1]531*	0.1850	0.0077	0.9731	0.0173	0.0492	0.0148
NBP[1]557*	0.1783	0.0074	0.9973	0.0177	0.0500	0.0150
NBP[1]582*	0.1705	0.0071	1.0129	0.0180	0.0503	0.0152
NBP[1]608*	0.1643	0.0068	1.0349	0.0184	0.0510	0.0154
NBP[1]634*	0.1611	0.0067	1.0752	0.0191	0.0526	0.0158
NBP[1]659*	0.1586	0.0066	1.1194	0.0199	0.0543	0.0163
NBP[1]685*	0.1641	0.0068	1.2227	0.0217	0.0588	0.0177
NBP[1]711*	0.1715	0.0071	1.3445	0.0239	0.0642	0.0193
NBP[1]736*	0.1697	0.0071	1.3915	0.0247	0.0659	0.0198
NBP[1]762*	0.1653	0.0069	1.4214	0.0252	0.0669	0.0201
NBP[1]788*	0.1585	0.0066	1.4424	0.0256	0.0674	0.0203

* Specified by user.

Material Stream: 8 (continued)

Fluid Package: Basis-1
Property Package: Peng-Robinson

COMPOSITION

Liquid Phase (continued)

Phase Fraction 6.133e-002

COMPONENTS	MOLAR FLOW (kgmole/h)	MOLE FRACTION	MASS FLOW (tonne/d)	MASS FRACTION	LIQUID VOLUME FLOW (m3/h)	LIQUID VOLUME FRACTION
NBP[1]825*	0.2655	0.0110	2.5963	0.0461	0.1201	0.0362
NBP[1]873*	0.1830	0.0076	1.9404	0.0345	0.0887	0.0267
NBP[1]926*	0.1437	0.0060	1.6472	0.0293	0.0744	0.0224
NBP[1]978*	0.1474	0.0061	1.8524	0.0329	0.0825	0.0248
NBP[1]1021*	0.0728	0.0030	0.9655	0.0171	0.0426	0.0128
NBP[1]1075*	0.0449	0.0019	0.6310	0.0112	0.0276	0.0083
NBP[1]1123*	0.0417	0.0017	0.6267	0.0111	0.0271	0.0082
NBP[1]1173*	0.0300	0.0012	0.4772	0.0085	0.0205	0.0062
NBP[1]1250*	0.0393	0.0016	0.6767	0.0120	0.0287	0.0086
NBP[1]1339*	0.0364	0.0015	0.6999	0.0124	0.0291	0.0088
NBP[1]1432*	0.0257	0.0011	0.5397	0.0096	0.0221	0.0067
NBP[1]1528*	0.0180	0.0007	0.4082	0.0073	0.0165	0.0050
NBP[1]1637*	0.0127	0.0005	0.3047	0.0054	0.0122	0.0037
NBP[1]1732*	0.0087	0.0004	0.2194	0.0039	0.0087	0.0026
NBP[1]1819*	0.0000	0.0000	0.0000	0.0000	0.0000	0.0000
NBP[1]1913*	0.0000	0.0000	0.0000	0.0000	0.0000	0.0000
Total	24.0513	1.0000	56.2968	1.0000	3.3219	1.0000

Phase Fraction

COMPONENTS	MOLAR FLOW	MOLE FRACTION	MASS FLOW	MASS FRACTION	LIQUID VOLUME FLOW	LIQUID VOLUME FRACTION

Licensed to: PETROCHEMICAL ENGINEERIN
* Specified by user.

Material Stream: 8 (continued)

Fluid Package: Basis-1
Property Package: Peng-Robinson

COMPOSITION

COMPONENTS	MOLAR FLOW	MOLE FRACTION	MASS FLOW	MASS FRACTION	LIQUID VOLUME FLOW	LIQUID VOLUME FRACTION (Phase Fraction)
Total		1.0000		1.0000		1.0000

Material Stream: 9

Fluid Package: Basis-1
Property Package: Peng-Robinson

CONDITIONS

		Overall	Vapour Phase	Liquid Phase	Aqueous Phase
Vapour / Phase Fraction		0.0000	0.0000	1.0000	0.0000
Temperature:	(F)	102.7	102.7	102.7	102.7
Pressure:	(psig)	1235	1235	1235	1235
Molar Flow	(MMSCFD)	0.4828	0.0000	0.4828	0.0000
Mass Flow	(tonne/d)	56.32	0.0000	56.32	0.0000
Std Ideal Liq Vol Flow	(barrel/day)	501.6	0.0000	501.6	0.0000
Molar Enthalpy	(kJ/kgmole)	-2.336e+005	-9.030e+004	-2.336e+005	-2.850e+005
Molar Entropy	(kJ/kgmole-C)	203.1	149.1	203.1	57.28
Heat Flow	(MMBtu/hr)	-5.325	0.0000	-5.325	0.0000
Liq Vol Flow @Std Cond	(barrel/day)	480.0 *	0.0000	480.0	0.0000

PROPERTIES

		Overall	Vapour Phase	Liquid Phase	Aqueous Phase
Molecular Weight		97.59	21.52	97.59	18.03
Molar Density	(kgmole/m3)	7.302	4.292	7.302	55.42
Mass Density	(kg/m3)	712.6	92.38	712.6	999.4
Act. Volume Flow	(barrel/day)	497.1	0.0000	497.1	0.0000
Mass Enthalpy	(kJ/kg)	-2394	-4196	-2394	-1.581e+004
Mass Entropy	(kJ/kg-C)	2.081	6.928	2.081	3.177
Heat Capacity	(kJ/kgmole-C)	206.4	60.21	206.4	77.55
Mass Heat Capacity	(kJ/kg-C)	2.115	2.798	2.115	4.301
LHV Molar Basis (Std)	(Btu/SCF)	---	---	---	6.516e-004
LHV Mass Basis (Std)	(kJ/kg)	---	---	---	3.189e-002
Phase Fraction [Vol. Basis]		---	---	1.000	---

* Specified by user.

Material Stream: 9 (continued)

Fluid Package: Basis-1
Property Package: Peng-Robinson

PROPERTIES

	Overall	Vapour Phase	Liquid Phase	Aqueous Phase
Phase Fraction [Mass Basis]	0.0000	0.0000	1.000	0.0000
Partial Pressure of CO2 (psig)	-14.70	---	---	---
Cost Based on Flow (Cost/s)	0.0000	0.0000	0.0000	0.0000
Act. Gas Flow (ACT_m3/h)	---	---	---	---
Avg. Liq. Density (kgmole/m3)	7.237	16.81	7.237	55.32
Specific Heat (kJ/kgmole-C)	206.4	60.21	206.4	77.55
Std. Gas Flow (STD_m3/h)	568.6	0.0000	568.6	0.0000
Std. Ideal Liq. Mass Density (kg/m3)	706.2	361.7	706.2	997.6
Act. Liq. Flow (barrel/day)	497.1	---	497.1	0.0000
Z Factor	---	0.7728	0.4543	5.985e-002
Watson K	12.20	17.21	12.20	8.487
User Property	---	---	---	---
Partial Pressure of H2S (psig)	-14.70	---	---	---
Cp/(Cp - R)	1.042	1.160	1.042	1.120
Cp/Cv	1.277	1.681	1.277	1.153
Heat of Vap. (kJ/kgmole)	1.562e+005	---	---	---
Kinematic Viscosity (cSt)	2.754	0.1603	2.754	0.6611
Liq. Mass Density (Std. Cond) (kg/m3)	738.0	0.9139	738.0	1015
Liq. Vol. Flow (Std. Cond) (barrel/day)	480.0	0.0000	480.0	0.0000
Liquid Fraction	1.000	0.0000	1.000	1.000
Molar Volume (m3/kgmole)	0.1369	0.2330	0.1369	1.804e-002
Mass Heat of Vap. (kJ/kg)	1601	---	---	---
Phase Fraction [Molar Basis]	0.0000	0.0000	1.0000	0.0000
Surface Tension (dyne/cm)	11.02	---	11.02	69.57
Thermal Conductivity (W/m-K)	8.920e-002	4.125e-002	8.920e-002	0.6306
Viscosity (cP)	1.963	1.481e-002	1.963	0.6607
Cv (Semi-Ideal) (kJ/kgmole-C)	198.1	51.90	198.1	69.24
Mass Cv (Semi-Ideal) (kJ/kg-C)	2.030	2.411	2.030	3.840
Cv (kJ/kgmole-C)	161.6	35.81	161.6	67.25
Mass Cv (kJ/kg-C)	1.656	1.664	1.656	3.729
Cv (Ent. Method) (kJ/kgmole-C)	172.4	---	172.4	66.54
Mass Cv (Ent. Method) (kJ/kg-C)	1.766	---	1.766	3.690
Cp/Cv (Ent. Method)	1.198	---	1.198	1.166
Reid VP at 37.8 C (psig)	254.3	---	254.3	---
True VP at 37.8 C (psig)	1222	2761	1222	118.6
Liq. Vol. Flow - Sum(Std. Cond) (barrel/day)	480.0	0.0000	480.0	0.0000
HHV Molar Basis (Std) (Btu/SCF)	---	---	---	46.43
HHV Mass Basis (Std) (kJ/kg)	---	---	---	2273
CO2 Loading	---	---	---	---
CO2 App ML Con (kgmole/m3)	0.1767	---	0.1767	---
CO2 App WT Con (kgmol/kg)	2.480e-004	---	2.480e-004	---
Phase Fraction [Act. Vol. Basis]	0.0000	0.0000	1.000	0.0000
Mass Exergy (kJ/kg)	55.33	---	---	---
Viscosity Index	14.43	---	---	---
Ideal Gas Cp/Cv	1.055	1.243	1.055	1.328
Ideal Gas Cp (kJ/kgmole-C)	160.8	42.57	160.8	33.66
Mass Ideal Gas Cp (kJ/kg-C)	1.648	1.978	1.648	1.867
Bubble Point Pressure (psig)	1235	---	---	---

COMPOSITION

Overall Phase

Vapour Fraction 0.0000

COMPONENTS	MOLAR FLOW (kgmole/h)	MOLE FRACTION	MASS FLOW (tonne/d)	MASS FRACTION	LIQUID VOLUME FLOW (m3/h)	LIQUID VOLUME FRACTION
Methane	6.2665	0.2606	2.4128	0.0428	0.3358	0.1011
Ethane	2.3628	0.0983	1.7052	0.0303	0.1998	0.0601
Propane	2.4953	0.1038	2.6409	0.0469	0.2172	0.0654

* Specified by user.

Material Stream: 9 (continued)

Fluid Package: Basis-1
Property Package: Peng-Robinson

COMPOSITION

Overall Phase (continued)

Vapour Fraction 0.0000

COMPONENTS	MOLAR FLOW (kgmole/h)	MOLE FRACTION	MASS FLOW (tonne/d)	MASS FRACTION	LIQUID VOLUME FLOW (m3/h)	LIQUID VOLUME FRACTION
i-Butane	0.5210	0.0217	0.7268	0.0129	0.0539	0.0162
n-Butane	1.1873	0.0494	1.6562	0.0294	0.1183	0.0356
i-Pentane	0.3659	0.0152	0.6336	0.0113	0.0423	0.0127
n-Pentane	0.4575	0.0190	0.7921	0.0141	0.0524	0.0158
n-Hexane	0.9607	0.0399	1.9870	0.0353	0.1249	0.0376
Nitrogen	0.0878	0.0037	0.0590	0.0010	0.0031	0.0009
CO2	0.5820	0.0242	0.6148	0.0109	0.0310	0.0093
H2S	0.0001	0.0000	0.0001	0.0000	0.0000	0.0000
H2O	0.0222	0.0009	0.0096	0.0002	0.0004	0.0001
NBP[1]95*	0.1366	0.0057	0.2227	0.0040	0.0136	0.0041
NBP[1]121*	0.1858	0.0077	0.3249	0.0058	0.0197	0.0059
NBP[1]147*	0.2705	0.0112	0.5207	0.0092	0.0310	0.0093
NBP[1]171*	0.5724	0.0238	1.2045	0.0214	0.0705	0.0212
NBP[1]195*	0.8153	0.0339	1.8311	0.0325	0.1059	0.0319
NBP[1]222*	0.6565	0.0273	1.5857	0.0282	0.0906	0.0273
NBP[1]248*	0.5780	0.0240	1.5012	0.0267	0.0848	0.0255
NBP[1]273*	0.4853	0.0202	1.3479	0.0239	0.0752	0.0226
NBP[1]299*	0.3909	0.0163	1.1576	0.0206	0.0639	0.0192
NBP[1]325*	0.2893	0.0120	0.9102	0.0162	0.0498	0.0150
NBP[1]351*	0.2384	0.0099	0.7971	0.0142	0.0432	0.0130
NBP[1]377*	0.2205	0.0092	0.7862	0.0140	0.0421	0.0127
NBP[1]402*	0.2036	0.0085	0.7744	0.0137	0.0411	0.0124
NBP[1]428*	0.1946	0.0081	0.7896	0.0140	0.0415	0.0125
NBP[1]454*	0.1947	0.0081	0.8441	0.0150	0.0439	0.0132
NBP[1]480*	0.1976	0.0082	0.9156	0.0163	0.0471	0.0142
NBP[1]505*	0.1917	0.0080	0.9468	0.0168	0.0483	0.0145
NBP[1]531*	0.1851	0.0077	0.9731	0.0173	0.0492	0.0148
NBP[1]557*	0.1783	0.0074	0.9973	0.0177	0.0500	0.0150
NBP[1]582*	0.1705	0.0071	1.0129	0.0180	0.0503	0.0151
NBP[1]608*	0.1643	0.0068	1.0349	0.0184	0.0510	0.0153
NBP[1]634*	0.1611	0.0067	1.0752	0.0191	0.0526	0.0158
NBP[1]659*	0.1586	0.0066	1.1194	0.0199	0.0543	0.0163
NBP[1]685*	0.1641	0.0068	1.2227	0.0217	0.0588	0.0177
NBP[1]711*	0.1715	0.0071	1.3445	0.0239	0.0642	0.0193
NBP[1]736*	0.1697	0.0071	1.3915	0.0247	0.0659	0.0198
NBP[1]762*	0.1653	0.0069	1.4214	0.0252	0.0669	0.0201
NBP[1]788*	0.1585	0.0066	1.4424	0.0256	0.0674	0.0203
NBP[1]825*	0.2655	0.0110	2.5963	0.0461	0.1201	0.0361
NBP[1]873*	0.1830	0.0076	1.9404	0.0345	0.0887	0.0267
NBP[1]926*	0.1437	0.0060	1.6472	0.0292	0.0744	0.0224
NBP[1]978*	0.1474	0.0061	1.8524	0.0329	0.0825	0.0248
NBP[1]1021*	0.0728	0.0030	0.9655	0.0171	0.0426	0.0128
NBP[1]1075*	0.0449	0.0019	0.6310	0.0112	0.0276	0.0083
NBP[1]1123*	0.0417	0.0017	0.6267	0.0111	0.0271	0.0082
NBP[1]1173*	0.0300	0.0012	0.4772	0.0085	0.0205	0.0062
NBP[1]1250*	0.0393	0.0016	0.6767	0.0120	0.0287	0.0086
NBP[1]1339*	0.0364	0.0015	0.6999	0.0124	0.0291	0.0088
NBP[1]1432*	0.0257	0.0011	0.5397	0.0096	0.0221	0.0067
NBP[1]1528*	0.0180	0.0007	0.4082	0.0072	0.0165	0.0050
NBP[1]1637*	0.0127	0.0005	0.3047	0.0054	0.0122	0.0037
NBP[1]1732*	0.0088	0.0004	0.2221	0.0039	0.0088	0.0026
NBP[1]1819*	0.0000	0.0000	0.0000	0.0000	0.0000	0.0000
NBP[1]1913*	0.0000	0.0000	0.0000	0.0000	0.0000	0.0000
Total	24.0478	1.0000	56.3217	1.0000	3.3229	1.0000

* Specified by user.

Material Stream: 9 (continued)

Fluid Package: Basis-1
Property Package: Peng-Robinson

COMPOSITION

Vapour Phase

Phase Fraction 0.0000

COMPONENTS	MOLAR FLOW (kgmole/h)	MOLE FRACTION	MASS FLOW (tonne/d)	MASS FRACTION	LIQUID VOLUME FLOW (m3/h)	LIQUID VOLUME FRACTION
Methane	0.0000	0.7673	0.0000	0.5719	0.0000	0.6910
Ethane	0.0000	0.1010	0.0000	0.1412	0.0000	0.1436
Propane	0.0000	0.0488	0.0000	0.1000	0.0000	0.0714
i-Butane	0.0000	0.0058	0.0000	0.0156	0.0000	0.0100
n-Butane	0.0000	0.0106	0.0000	0.0285	0.0000	0.0177
i-Pentane	0.0000	0.0018	0.0000	0.0062	0.0000	0.0036
n-Pentane	0.0000	0.0019	0.0000	0.0064	0.0000	0.0037
n-Hexane	0.0000	0.0019	0.0000	0.0078	0.0000	0.0043
Nitrogen	0.0000	0.0211	0.0000	0.0274	0.0000	0.0123
CO2	0.0000	0.0335	0.0000	0.0685	0.0000	0.0300
H2S	0.0000	0.0000	0.0000	0.0000	0.0000	0.0000
H2O	0.0000	0.0012	0.0000	0.0010	0.0000	0.0004
NBP[1]95*	0.0000	0.0006	0.0000	0.0018	0.0000	0.0010
NBP[1]121*	0.0000	0.0006	0.0000	0.0020	0.0000	0.0010
NBP[1]147*	0.0000	0.0006	0.0000	0.0023	0.0000	0.0012
NBP[1]171*	0.0000	0.0010	0.0000	0.0039	0.0000	0.0020
NBP[1]195*	0.0000	0.0010	0.0000	0.0043	0.0000	0.0022
NBP[1]222*	0.0000	0.0005	0.0000	0.0026	0.0000	0.0013
NBP[1]248*	0.0000	0.0003	0.0000	0.0017	0.0000	0.0008
NBP[1]273*	0.0000	0.0002	0.0000	0.0010	0.0000	0.0005
NBP[1]299*	0.0000	0.0001	0.0000	0.0006	0.0000	0.0003
NBP[1]325*	0.0000	0.0001	0.0000	0.0003	0.0000	0.0001
NBP[1]351*	0.0000	0.0000	0.0000	0.0002	0.0000	0.0001
NBP[1]377*	0.0000	0.0000	0.0000	0.0001	0.0000	0.0001
NBP[1]402*	0.0000	0.0000	0.0000	0.0001	0.0000	0.0000
NBP[1]428*	0.0000	0.0000	0.0000	0.0000	0.0000	0.0000
NBP[1]454*	0.0000	0.0000	0.0000	0.0000	0.0000	0.0000
NBP[1]480*	0.0000	0.0000	0.0000	0.0000	0.0000	0.0000
NBP[1]505*	0.0000	0.0000	0.0000	0.0000	0.0000	0.0000
NBP[1]531*	0.0000	0.0000	0.0000	0.0000	0.0000	0.0000
NBP[1]557*	0.0000	0.0000	0.0000	0.0000	0.0000	0.0000
NBP[1]582*	0.0000	0.0000	0.0000	0.0000	0.0000	0.0000
NBP[1]608*	0.0000	0.0000	0.0000	0.0000	0.0000	0.0000
NBP[1]634*	0.0000	0.0000	0.0000	0.0000	0.0000	0.0000
NBP[1]659*	0.0000	0.0000	0.0000	0.0000	0.0000	0.0000
NBP[1]685*	0.0000	0.0000	0.0000	0.0000	0.0000	0.0000
NBP[1]711*	0.0000	0.0000	0.0000	0.0000	0.0000	0.0000
NBP[1]736*	0.0000	0.0000	0.0000	0.0000	0.0000	0.0000
NBP[1]762*	0.0000	0.0000	0.0000	0.0000	0.0000	0.0000
NBP[1]788*	0.0000	0.0000	0.0000	0.0000	0.0000	0.0000
NBP[1]825*	0.0000	0.0000	0.0000	0.0000	0.0000	0.0000
NBP[1]873*	0.0000	0.0000	0.0000	0.0000	0.0000	0.0000
NBP[1]926*	0.0000	0.0000	0.0000	0.0000	0.0000	0.0000
NBP[1]978*	0.0000	0.0000	0.0000	0.0000	0.0000	0.0000
NBP[1]1021*	0.0000	0.0000	0.0000	0.0000	0.0000	0.0000
NBP[1]1075*	0.0000	0.0000	0.0000	0.0000	0.0000	0.0000
NBP[1]1123*	0.0000	0.0000	0.0000	0.0000	0.0000	0.0000
NBP[1]1173*	0.0000	0.0000	0.0000	0.0000	0.0000	0.0000
NBP[1]1250*	0.0000	0.0000	0.0000	0.0000	0.0000	0.0000
NBP[1]1339*	0.0000	0.0000	0.0000	0.0000	0.0000	0.0000
NBP[1]1432*	0.0000	0.0000	0.0000	0.0000	0.0000	0.0000
NBP[1]1528*	0.0000	0.0000	0.0000	0.0000	0.0000	0.0000
NBP[1]1637*	0.0000	0.0000	0.0000	0.0000	0.0000	0.0000
NBP[1]1732*	0.0000	0.0000	0.0000	0.0003	0.0000	0.0001

* Specified by user.

Material Stream: 9 (continued)

Fluid Package: Basis-1
Property Package: Peng-Robinson

COMPOSITION

Vapour Phase (continued)

Phase Fraction 0.0000

COMPONENTS	MOLAR FLOW (kgmole/h)	MOLE FRACTION	MASS FLOW (tonne/d)	MASS FRACTION	LIQUID VOLUME FLOW (m3/h)	LIQUID VOLUME FRACTION
NBP[1]1819*	0.0000	0.0000	0.0000	0.0019	0.0000	0.0006
NBP[1]1913*	0.0000	0.0000	0.0000	0.0023	0.0000	0.0008
Total	0.0000	1.0000	0.0000	1.0000	0.0000	1.0000

Liquid Phase

Phase Fraction 1.000

COMPONENTS	MOLAR FLOW (kgmole/h)	MOLE FRACTION	MASS FLOW (tonne/d)	MASS FRACTION	LIQUID VOLUME FLOW (m3/h)	LIQUID VOLUME FRACTION
Methane	6.2665	0.2606	2.4128	0.0428	0.3358	0.1011
Ethane	2.3628	0.0983	1.7052	0.0303	0.1998	0.0601
Propane	2.4953	0.1038	2.6409	0.0469	0.2172	0.0654
i-Butane	0.5210	0.0217	0.7268	0.0129	0.0539	0.0162
n-Butane	1.1873	0.0494	1.6562	0.0294	0.1183	0.0356
i-Pentane	0.3659	0.0152	0.6336	0.0113	0.0423	0.0127
n-Pentane	0.4575	0.0190	0.7921	0.0141	0.0524	0.0158
n-Hexane	0.9607	0.0399	1.9870	0.0353	0.1249	0.0376
Nitrogen	0.0878	0.0037	0.0590	0.0010	0.0031	0.0009
CO2	0.5820	0.0242	0.6148	0.0109	0.0310	0.0093
H2S	0.0001	0.0000	0.0001	0.0000	0.0000	0.0000
H2O	0.0222	0.0009	0.0096	0.0002	0.0004	0.0001
NBP[1]95*	0.1366	0.0057	0.2227	0.0040	0.0136	0.0041
NBP[1]121*	0.1858	0.0077	0.3249	0.0058	0.0197	0.0059
NBP[1]147*	0.2705	0.0112	0.5207	0.0092	0.0310	0.0093
NBP[1]171*	0.5724	0.0238	1.2045	0.0214	0.0705	0.0212
NBP[1]195*	0.8153	0.0339	1.8311	0.0325	0.1059	0.0319
NBP[1]222*	0.6565	0.0273	1.5857	0.0282	0.0906	0.0273
NBP[1]248*	0.5780	0.0240	1.5012	0.0267	0.0848	0.0255
NBP[1]273*	0.4853	0.0202	1.3479	0.0239	0.0752	0.0226
NBP[1]299*	0.3909	0.0163	1.1576	0.0206	0.0639	0.0192
NBP[1]325*	0.2893	0.0120	0.9102	0.0162	0.0498	0.0150
NBP[1]351*	0.2384	0.0099	0.7971	0.0142	0.0432	0.0130
NBP[1]377*	0.2205	0.0092	0.7862	0.0140	0.0421	0.0127
NBP[1]402*	0.2036	0.0085	0.7744	0.0137	0.0411	0.0124
NBP[1]428*	0.1946	0.0081	0.7896	0.0140	0.0415	0.0125
NBP[1]454*	0.1947	0.0081	0.8441	0.0150	0.0439	0.0132
NBP[1]480*	0.1976	0.0082	0.9156	0.0163	0.0471	0.0142
NBP[1]505*	0.1917	0.0080	0.9468	0.0168	0.0483	0.0145
NBP[1]531*	0.1851	0.0077	0.9731	0.0173	0.0492	0.0148
NBP[1]557*	0.1783	0.0074	0.9973	0.0177	0.0500	0.0150
NBP[1]582*	0.1705	0.0071	1.0129	0.0180	0.0503	0.0151
NBP[1]608*	0.1643	0.0068	1.0349	0.0184	0.0510	0.0153
NBP[1]634*	0.1611	0.0067	1.0752	0.0191	0.0526	0.0158
NBP[1]659*	0.1586	0.0066	1.1194	0.0199	0.0543	0.0163
NBP[1]685*	0.1641	0.0068	1.2227	0.0217	0.0588	0.0177
NBP[1]711*	0.1715	0.0071	1.3445	0.0239	0.0642	0.0193
NBP[1]736*	0.1697	0.0071	1.3915	0.0247	0.0659	0.0198
NBP[1]762*	0.1653	0.0069	1.4214	0.0252	0.0669	0.0201
NBP[1]788*	0.1585	0.0066	1.4424	0.0256	0.0674	0.0203
NBP[1]825*	0.2655	0.0110	2.5963	0.0461	0.1201	0.0361
NBP[1]873*	0.1830	0.0076	1.9404	0.0345	0.0887	0.0267
NBP[1]926*	0.1437	0.0060	1.6472	0.0292	0.0744	0.0224
NBP[1]978*	0.1474	0.0061	1.8524	0.0329	0.0825	0.0248
NBP[1]1021*	0.0728	0.0030	0.9655	0.0171	0.0426	0.0128
NBP[1]1075*	0.0449	0.0019	0.6310	0.0112	0.0276	0.0083
NBP[1]1123*	0.0417	0.0017	0.6267	0.0111	0.0271	0.0082

* Specified by user.

Material Stream: 9 (continued)

Fluid Package: Basis-1
Property Package: Peng-Robinson

COMPOSITION

Liquid Phase (continued)

Phase Fraction 1.000

COMPONENTS	MOLAR FLOW (kgmole/h)	MOLE FRACTION	MASS FLOW (tonne/d)	MASS FRACTION	LIQUID VOLUME FLOW (m3/h)	LIQUID VOLUME FRACTION
NBP[1]1173*	0.0300	0.0012	0.4772	0.0085	0.0205	0.0062
NBP[1]1250*	0.0393	0.0016	0.6767	0.0120	0.0287	0.0086
NBP[1]1339*	0.0364	0.0015	0.6999	0.0124	0.0291	0.0088
NBP[1]1432*	0.0257	0.0011	0.5397	0.0096	0.0221	0.0067
NBP[1]1528*	0.0180	0.0007	0.4082	0.0072	0.0165	0.0050
NBP[1]1637*	0.0127	0.0005	0.3047	0.0054	0.0122	0.0037
NBP[1]1732*	0.0088	0.0004	0.2221	0.0039	0.0088	0.0026
NBP[1]1819*	0.0000	0.0000	0.0000	0.0000	0.0000	0.0000
NBP[1]1913*	0.0000	0.0000	0.0000	0.0000	0.0000	0.0000
Total	24.0478	1.0000	56.3217	1.0000	3.3229	1.0000

Phase Fraction

COMPONENTS	MOLAR FLOW	MOLE FRACTION	MASS FLOW	MASS FRACTION	LIQUID VOLUME FLOW	LIQUID VOLUME FRACTION

* Specified by user.

Material Stream: 9 (continued)

Fluid Package: Basis-1
Property Package: Peng-Robinson

COMPOSITION

COMPONENTS	MOLAR FLOW	MOLE FRACTION	MASS FLOW	MASS FRACTION	LIQUID VOLUME FLOW	Phase Fraction LIQUID VOLUME FRACTION
Total		1.0000		1.0000		1.0000

Material Stream: 10

Fluid Package: Basis-1
Property Package: Peng-Robinson

CONDITIONS

		Overall	Vapour Phase	Liquid Phase	Liquid Phase
Vapour / Phase Fraction		0.5258	0.5258	0.0073	0.4668
Temperature:	(F)	69.65	69.65	69.65	69.65
Pressure:	(psig)	20.00 *	20.00	20.00	20.00
Molar Flow	(MMSCFD)	0.4828	0.2539	3.544e-003	0.2254
Mass Flow	(tonne/d)	56.32	9.176	2.873	44.27
Std Ideal Liq Vol Flow	(barrel/day)	501.6	134.8	18.12	348.7
Molar Enthalpy	(kJ/kgmole)	-2.336e+005	-1.031e+005	-1.459e+006	-3.614e+005
Molar Entropy	(kJ/kgmole-C)	217.2	181.2	1399	239.1
Heat Flow	(MMBtu/hr)	-5.325	-1.236	-0.2441	-3.845
Liq Vol Flow @Std Cond	(barrel/day)	480.0 *	4.477e+004	18.32	344.4

PROPERTIES

		Overall	Vapour Phase	Liquid Phase	Liquid Phase
Molecular Weight		97.59	30.24	678.3	164.3
Molar Density	(kgmole/m3)	0.1859	9.963e-002	1.449	4.891
Mass Density	(kg/m3)	18.14	3.013	982.9	803.8
Act. Volume Flow	(barrel/day)	1.952e+004	1.916e+004	18.39	346.4
Mass Enthalpy	(kJ/kg)	-2394	-3410	-2151	-2199
Mass Entropy	(kJ/kg-C)	2.225	5.993	2.062	1.455
Heat Capacity	(kJ/kgmole-C)	185.5	54.03	1255	316.9
Mass Heat Capacity	(kJ/kg-C)	1.901	1.787	1.851	1.928
LHV Molar Basis (Std)	(Btu/SCF)	---	---	---	---
LHV Mass Basis (Std)	(kJ/kg)	---	---	---	---
Phase Fraction [Vol. Basis]		0.2687	0.2687	3.612e-002	0.6952
Phase Fraction [Mass Basis]		0.1629	0.1629	5.101e-002	0.7861
Partial Pressure of CO2	(psig)	-13.15	---	---	---
Cost Based on Flow	(Cost/s)	0.0000	0.0000	0.0000	0.0000
Act. Gas Flow	(ACT_m3/h)	126.9	126.9	---	---
Avg. Liq. Density	(kgmole/m3)	7.237	14.16	1.471	4.860
Specific Heat	(kJ/kgmole-C)	185.5	54.03	1255	316.9
Std. Gas Flow	(STD_m3/h)	568.6	299.0	4.173	265.4

* Specified by user.

Material Stream: 10 (continued)

Fluid Package: Basis-1
Property Package: Peng-Robinson

PROPERTIES

	Overall	Vapour Phase	Liquid Phase	Liquid Phase
Std. Ideal Liq. Mass Density (kg/m3)	706.2	428.2	997.6	798.6
Act. Liq. Flow (barrel/day)	364.8	---	18.39	346.4
Z Factor	---	0.9820	6.752e-002	2.000e-002
Watson K	12.20	15.80	11.93	11.89
User Property	---	---	---	---
Partial Pressure of H2S (psig)	-14.70	---	---	---
Cp/(Cp - R)	1.047	1.182	1.007	1.027
Cp/Cv	1.026	1.197	1.098	1.027
Heat of Vap. (kJ/kgmole)	2.071e+005	---	---	---
Kinematic Viscosity (cSt)	---	3.405	2.084e+004	2.134
Liq. Mass Density (Std. Cond) (kg/m3)	738.0	1.289	986.5	808.5
Liq. Vol. Flow (Std. Cond) (barrel/day)	480.0	4.477e+004	18.32	344.4
Liquid Fraction	0.4742	0.0000	1.000	1.000
Molar Volume (m3/kgmole)	5.378	10.04	0.6901	0.2044
Mass Heat of Vap. (kJ/kg)	2122	---	---	---
Phase Fraction [Molar Basis]	0.5258	0.5258	0.0073	0.4668
Surface Tension (dyne/cm)	---	---	26.49	22.26
Thermal Conductivity (W/m-K)	---	2.413e-002	0.1376	0.1140
Viscosity (cP)	---	1.026e-002	2.049e+004	1.716
Cv (Semi-Ideal) (kJ/kgmole-C)	177.2	45.71	1247	---
Mass Cv (Semi-Ideal) (kJ/kg-C)	1.816	1.512	1.839	---
Cv (kJ/kgmole-C)	180.8	45.13	1143	---
Mass Cv (kJ/kg-C)	1.853	1.493	1.685	---
Cv (Ent. Method) (kJ/kgmole-C)	---	---	1200	---
Mass Cv (Ent. Method) (kJ/kg-C)	---	---	1.770	---
Cp/Cv (Ent. Method)	---	---	1.046	---
Reid VP at 37.8 C (psig)	254.3	1094	-6.940	3.294
True VP at 37.8 C (psig)	1222	1543	26.48	29.00
Liq. Vol. Flow - Sum(Std. Cond) (barrel/day)	4.479e+004	4.477e+004	18.32	0.0000
HHV Molar Basis (Std) (Btu/SCF)	---	---	---	---
HHV Mass Basis (Std) (kJ/kg)	---	---	---	---
CO2 Loading	---	---	---	---
CO2 App ML Con (kgmole/m3)	---	---	2.760e-003	8.153e-003
CO2 App WT Con (kgmol/kg)	---	---	2.808e-006	1.014e-005
Phase Fraction [Act. Vol. Basis]	0.9813	0.9813	9.417e-004	1.774e-002
Mass Exergy (kJ/kg)	12.42	---	---	---
Viscosity Index	14.28	---	---	---
Ideal Gas Cp/Cv	1.058	1.185	1.008	1.034
Ideal Gas Cp (kJ/kgmole-C)	152.7	53.38	1035	250.7
Mass Ideal Gas Cp (kJ/kg-C)	1.565	1.765	1.526	1.526
Bubble Point Pressure (psig)	1076	---	---	---

COMPOSITION

Overall Phase

Vapour Fraction 0.5258

COMPONENTS	MOLAR FLOW (kgmole/h)	MOLE FRACTION	MASS FLOW (tonne/d)	MASS FRACTION	LIQUID VOLUME FLOW (m3/h)	LIQUID VOLUME FRACTION
Methane	6.2665	0.2606	2.4128	0.0428	0.3358	0.1011
Ethane	2.3628	0.0983	1.7052	0.0303	0.1998	0.0601
Propane	2.4953	0.1038	2.6409	0.0469	0.2172	0.0654
i-Butane	0.5210	0.0217	0.7268	0.0129	0.0539	0.0162
n-Butane	1.1873	0.0494	1.6562	0.0294	0.1183	0.0356
i-Pentane	0.3659	0.0152	0.6336	0.0113	0.0423	0.0127
n-Pentane	0.4575	0.0190	0.7921	0.0141	0.0524	0.0158
n-Hexane	0.9607	0.0399	1.9870	0.0353	0.1249	0.0376
Nitrogen	0.0878	0.0037	0.0590	0.0010	0.0031	0.0009
CO2	0.5820	0.0242	0.6148	0.0109	0.0310	0.0093

* Specified by user.

Material Stream: 10 (continued)

Fluid Package: Basis-1
Property Package: Peng-Robinson

COMPOSITION

Overall Phase (continued)

Vapour Fraction 0.5258

COMPONENTS	MOLAR FLOW (kgmole/h)	MOLE FRACTION	MASS FLOW (tonne/d)	MASS FRACTION	LIQUID VOLUME FLOW (m3/h)	LIQUID VOLUME FRACTION
H2S	0.0001	0.0000	0.0001	0.0000	0.0000	0.0000
H2O	0.0222	0.0009	0.0096	0.0002	0.0004	0.0001
NBP[1]95*	0.1366	0.0057	0.2227	0.0040	0.0136	0.0041
NBP[1]121*	0.1858	0.0077	0.3249	0.0058	0.0197	0.0059
NBP[1]147*	0.2705	0.0112	0.5207	0.0092	0.0310	0.0093
NBP[1]171*	0.5724	0.0238	1.2045	0.0214	0.0705	0.0212
NBP[1]195*	0.8153	0.0339	1.8311	0.0325	0.1059	0.0319
NBP[1]222*	0.6565	0.0273	1.5857	0.0282	0.0906	0.0273
NBP[1]248*	0.5780	0.0240	1.5012	0.0267	0.0848	0.0255
NBP[1]273*	0.4853	0.0202	1.3479	0.0239	0.0752	0.0226
NBP[1]299*	0.3909	0.0163	1.1576	0.0206	0.0639	0.0192
NBP[1]325*	0.2893	0.0120	0.9102	0.0162	0.0498	0.0150
NBP[1]351*	0.2384	0.0099	0.7971	0.0142	0.0432	0.0130
NBP[1]377*	0.2205	0.0092	0.7862	0.0140	0.0421	0.0127
NBP[1]402*	0.2036	0.0085	0.7744	0.0137	0.0411	0.0124
NBP[1]428*	0.1946	0.0081	0.7896	0.0140	0.0415	0.0125
NBP[1]454*	0.1947	0.0081	0.8441	0.0150	0.0439	0.0132
NBP[1]480*	0.1976	0.0082	0.9156	0.0163	0.0471	0.0142
NBP[1]505*	0.1917	0.0080	0.9468	0.0168	0.0483	0.0145
NBP[1]531*	0.1851	0.0077	0.9731	0.0173	0.0492	0.0148
NBP[1]557*	0.1783	0.0074	0.9973	0.0177	0.0500	0.0150
NBP[1]582*	0.1705	0.0071	1.0129	0.0180	0.0503	0.0151
NBP[1]608*	0.1643	0.0068	1.0349	0.0184	0.0510	0.0153
NBP[1]634*	0.1611	0.0067	1.0752	0.0191	0.0526	0.0158
NBP[1]659*	0.1586	0.0066	1.1194	0.0199	0.0543	0.0163
NBP[1]685*	0.1641	0.0068	1.2227	0.0217	0.0588	0.0177
NBP[1]711*	0.1715	0.0071	1.3445	0.0239	0.0642	0.0193
NBP[1]736*	0.1697	0.0071	1.3915	0.0247	0.0659	0.0198
NBP[1]762*	0.1653	0.0069	1.4214	0.0252	0.0669	0.0201
NBP[1]788*	0.1585	0.0066	1.4424	0.0256	0.0674	0.0203
NBP[1]825*	0.2655	0.0110	2.5963	0.0461	0.1201	0.0361
NBP[1]873*	0.1830	0.0076	1.9404	0.0345	0.0887	0.0267
NBP[1]926*	0.1437	0.0060	1.6472	0.0292	0.0744	0.0224
NBP[1]978*	0.1474	0.0061	1.8524	0.0329	0.0825	0.0248
NBP[1]1021*	0.0728	0.0030	0.9655	0.0171	0.0426	0.0128
NBP[1]1075*	0.0449	0.0019	0.6310	0.0112	0.0276	0.0083
NBP[1]1123*	0.0417	0.0017	0.6267	0.0111	0.0271	0.0082
NBP[1]1173*	0.0300	0.0012	0.4772	0.0085	0.0205	0.0062
NBP[1]1250*	0.0393	0.0016	0.6767	0.0120	0.0287	0.0086
NBP[1]1339*	0.0364	0.0015	0.6999	0.0124	0.0291	0.0088
NBP[1]1432*	0.0257	0.0011	0.5397	0.0096	0.0221	0.0067
NBP[1]1528*	0.0180	0.0007	0.4082	0.0072	0.0165	0.0050
NBP[1]1637*	0.0127	0.0005	0.3047	0.0054	0.0122	0.0037
NBP[1]1732*	0.0088	0.0004	0.2221	0.0039	0.0088	0.0026
NBP[1]1819*	0.0000	0.0000	0.0000	0.0000	0.0000	0.0000
NBP[1]1913*	0.0000	0.0000	0.0000	0.0000	0.0000	0.0000
Total	24.0478	1.0000	56.3217	1.0000	3.3229	1.0000

Vapour Phase

Phase Fraction 0.5258

COMPONENTS	MOLAR FLOW (kgmole/h)	MOLE FRACTION	MASS FLOW (tonne/d)	MASS FRACTION	LIQUID VOLUME FLOW (m3/h)	LIQUID VOLUME FRACTION
Methane	6.2004	0.4903	2.3874	0.2602	0.3322	0.3721
Ethane	2.2300	0.1763	1.6093	0.1754	0.1885	0.2111
Propane	2.0440	0.1616	2.1632	0.2357	0.1779	0.1992

* Specified by user.

Material Stream: 10 (continued)

Fluid Package: Basis-1
Property Package: Peng-Robinson

COMPOSITION

Vapour Phase (continued)

Phase Fraction 0.5258

COMPONENTS	MOLAR FLOW (kgmole/h)	MOLE FRACTION	MASS FLOW (tonne/d)	MASS FRACTION	LIQUID VOLUME FLOW (m3/h)	LIQUID VOLUME FRACTION
i-Butane	0.3283	0.0260	0.4580	0.0499	0.0340	0.0380
n-Butane	0.6507	0.0515	0.9077	0.0989	0.0648	0.0726
i-Pentane	0.1150	0.0091	0.1991	0.0217	0.0133	0.0149
n-Pentane	0.1163	0.0092	0.2014	0.0219	0.0133	0.0149
n-Hexane	0.0865	0.0068	0.1790	0.0195	0.0113	0.0126
Nitrogen	0.0875	0.0069	0.0588	0.0064	0.0030	0.0034
CO2	0.5630	0.0445	0.5947	0.0648	0.0300	0.0336
H2S	0.0001	0.0000	0.0001	0.0000	0.0000	0.0000
H2O	0.0215	0.0017	0.0093	0.0010	0.0004	0.0004
NBP[1]95*	0.0363	0.0029	0.0591	0.0064	0.0036	0.0041
NBP[1]121*	0.0330	0.0026	0.0578	0.0063	0.0035	0.0039
NBP[1]147*	0.0304	0.0024	0.0585	0.0064	0.0035	0.0039
NBP[1]171*	0.0403	0.0032	0.0847	0.0092	0.0050	0.0056
NBP[1]195*	0.0348	0.0028	0.0782	0.0085	0.0045	0.0051
NBP[1]222*	0.0150	0.0012	0.0363	0.0040	0.0021	0.0023
NBP[1]248*	0.0071	0.0006	0.0186	0.0020	0.0010	0.0012
NBP[1]273*	0.0032	0.0003	0.0088	0.0010	0.0005	0.0006
NBP[1]299*	0.0013	0.0001	0.0039	0.0004	0.0002	0.0002
NBP[1]325*	0.0005	0.0000	0.0015	0.0002	0.0001	0.0001
NBP[1]351*	0.0002	0.0000	0.0006	0.0001	0.0000	0.0000
NBP[1]377*	0.0001	0.0000	0.0003	0.0000	0.0000	0.0000
NBP[1]402*	0.0000	0.0000	0.0001	0.0000	0.0000	0.0000
NBP[1]428*	0.0000	0.0000	0.0001	0.0000	0.0000	0.0000
NBP[1]454*	0.0000	0.0000	0.0000	0.0000	0.0000	0.0000
NBP[1]480*	0.0000	0.0000	0.0000	0.0000	0.0000	0.0000
NBP[1]505*	0.0000	0.0000	0.0000	0.0000	0.0000	0.0000
NBP[1]531*	0.0000	0.0000	0.0000	0.0000	0.0000	0.0000
NBP[1]557*	0.0000	0.0000	0.0000	0.0000	0.0000	0.0000
NBP[1]582*	0.0000	0.0000	0.0000	0.0000	0.0000	0.0000
NBP[1]608*	0.0000	0.0000	0.0000	0.0000	0.0000	0.0000
NBP[1]634*	0.0000	0.0000	0.0000	0.0000	0.0000	0.0000
NBP[1]659*	0.0000	0.0000	0.0000	0.0000	0.0000	0.0000
NBP[1]685*	0.0000	0.0000	0.0000	0.0000	0.0000	0.0000
NBP[1]711*	0.0000	0.0000	0.0000	0.0000	0.0000	0.0000
NBP[1]736*	0.0000	0.0000	0.0000	0.0000	0.0000	0.0000
NBP[1]762*	0.0000	0.0000	0.0000	0.0000	0.0000	0.0000
NBP[1]788*	0.0000	0.0000	0.0000	0.0000	0.0000	0.0000
NBP[1]825*	0.0000	0.0000	0.0000	0.0000	0.0000	0.0000
NBP[1]873*	0.0000	0.0000	0.0000	0.0000	0.0000	0.0000
NBP[1]926*	0.0000	0.0000	0.0000	0.0000	0.0000	0.0000
NBP[1]978*	0.0000	0.0000	0.0000	0.0000	0.0000	0.0000
NBP[1]1021*	0.0000	0.0000	0.0000	0.0000	0.0000	0.0000
NBP[1]1075*	0.0000	0.0000	0.0000	0.0000	0.0000	0.0000
NBP[1]1123*	0.0000	0.0000	0.0000	0.0000	0.0000	0.0000
NBP[1]1173*	0.0000	0.0000	0.0000	0.0000	0.0000	0.0000
NBP[1]1250*	0.0000	0.0000	0.0000	0.0000	0.0000	0.0000
NBP[1]1339*	0.0000	0.0000	0.0000	0.0000	0.0000	0.0000
NBP[1]1432*	0.0000	0.0000	0.0000	0.0000	0.0000	0.0000
NBP[1]1528*	0.0000	0.0000	0.0000	0.0000	0.0000	0.0000
NBP[1]1637*	0.0000	0.0000	0.0000	0.0000	0.0000	0.0000
NBP[1]1732*	0.0000	0.0000	0.0000	0.0000	0.0000	0.0000
NBP[1]1819*	0.0000	0.0000	0.0000	0.0000	0.0000	0.0000
NBP[1]1913*	0.0000	0.0000	0.0000	0.0000	0.0000	0.0000
Total	12.6455	1.0000	9.1765	1.0000	0.8929	1.0000

* Specified by user.

Material Stream: 10 (continued)

Fluid Package: Basis-1
Property Package: Peng-Robinson

COMPOSITION

Liquid Phase

Phase Fraction 7.339e-003

COMPONENTS	MOLAR FLOW (kgmole/h)	MOLE FRACTION	MASS FLOW (tonne/d)	MASS FRACTION	LIQUID VOLUME FLOW (m3/h)	LIQUID VOLUME FRACTION
Methane	0.0012	0.0066	0.0004	0.0002	0.0001	0.0005
Ethane	0.0015	0.0083	0.0011	0.0004	0.0001	0.0010
Propane	0.0038	0.0215	0.0040	0.0014	0.0003	0.0027
i-Butane	0.0014	0.0080	0.0020	0.0007	0.0001	0.0012
n-Butane	0.0035	0.0198	0.0049	0.0017	0.0003	0.0029
i-Pentane	0.0014	0.0082	0.0025	0.0009	0.0002	0.0014
n-Pentane	0.0018	0.0102	0.0031	0.0011	0.0002	0.0017
n-Hexane	0.0039	0.0219	0.0080	0.0028	0.0005	0.0042
Nitrogen	0.0000	0.0001	0.0000	0.0000	0.0000	0.0000
CO2	0.0003	0.0019	0.0004	0.0001	0.0000	0.0001
H2S	0.0000	0.0000	0.0000	0.0000	0.0000	0.0000
H2O	0.0000	0.0001	0.0000	0.0000	0.0000	0.0000
NBP[1]95*	0.0005	0.0030	0.0008	0.0003	0.0001	0.0004
NBP[1]121*	0.0007	0.0041	0.0013	0.0004	0.0001	0.0006
NBP[1]147*	0.0010	0.0058	0.0020	0.0007	0.0001	0.0010
NBP[1]171*	0.0021	0.0117	0.0043	0.0015	0.0003	0.0021
NBP[1]195*	0.0028	0.0158	0.0063	0.0022	0.0004	0.0030
NBP[1]222*	0.0021	0.0120	0.0051	0.0018	0.0003	0.0024
NBP[1]248*	0.0017	0.0099	0.0045	0.0016	0.0003	0.0021
NBP[1]273*	0.0014	0.0078	0.0038	0.0013	0.0002	0.0018
NBP[1]299*	0.0010	0.0059	0.0031	0.0011	0.0002	0.0014
NBP[1]325*	0.0007	0.0041	0.0023	0.0008	0.0001	0.0010
NBP[1]351*	0.0006	0.0031	0.0018	0.0006	0.0001	0.0008
NBP[1]377*	0.0005	0.0027	0.0017	0.0006	0.0001	0.0008
NBP[1]402*	0.0004	0.0023	0.0016	0.0005	0.0001	0.0007
NBP[1]428*	0.0004	0.0021	0.0015	0.0005	0.0001	0.0007
NBP[1]454*	0.0003	0.0019	0.0015	0.0005	0.0001	0.0006
NBP[1]480*	0.0003	0.0019	0.0015	0.0005	0.0001	0.0007
NBP[1]505*	0.0003	0.0017	0.0015	0.0005	0.0001	0.0006
NBP[1]531*	0.0003	0.0016	0.0014	0.0005	0.0001	0.0006
NBP[1]557*	0.0003	0.0014	0.0014	0.0005	0.0001	0.0006
NBP[1]582*	0.0002	0.0013	0.0014	0.0005	0.0001	0.0006
NBP[1]608*	0.0002	0.0012	0.0013	0.0005	0.0001	0.0006
NBP[1]634*	0.0002	0.0011	0.0013	0.0005	0.0001	0.0005
NBP[1]659*	0.0002	0.0011	0.0014	0.0005	0.0001	0.0006
NBP[1]685*	0.0002	0.0011	0.0015	0.0005	0.0001	0.0006
NBP[1]711*	0.0002	0.0011	0.0016	0.0006	0.0001	0.0006
NBP[1]736*	0.0002	0.0012	0.0017	0.0006	0.0001	0.0007
NBP[1]762*	0.0002	0.0012	0.0018	0.0006	0.0001	0.0007
NBP[1]788*	0.0002	0.0012	0.0019	0.0006	0.0001	0.0007
NBP[1]825*	0.0004	0.0022	0.0037	0.0013	0.0002	0.0014
NBP[1]873*	0.0003	0.0019	0.0035	0.0012	0.0002	0.0013
NBP[1]926*	0.0004	0.0022	0.0044	0.0015	0.0002	0.0016
NBP[1]978*	0.0006	0.0033	0.0072	0.0025	0.0003	0.0027
NBP[1]1021*	0.0005	0.0028	0.0066	0.0023	0.0003	0.0024
NBP[1]1075*	0.0008	0.0044	0.0109	0.0038	0.0005	0.0040
NBP[1]1123*	0.0018	0.0101	0.0266	0.0093	0.0012	0.0096
NBP[1]1173*	0.0043	0.0245	0.0689	0.0240	0.0030	0.0246
NBP[1]1250*	0.0282	0.1597	0.4852	0.1689	0.0206	0.1714
NBP[1]1339*	0.0361	0.2043	0.6937	0.2414	0.0289	0.2407
NBP[1]1432*	0.0257	0.1454	0.5397	0.1879	0.0221	0.1844
NBP[1]1528*	0.0180	0.1021	0.4082	0.1421	0.0165	0.1377
NBP[1]1637*	0.0127	0.0717	0.3047	0.1060	0.0122	0.1015
NBP[1]1732*	0.0088	0.0497	0.2221	0.0773	0.0088	0.0732

* Specified by user.

Material Stream: 10 (continued)

Fluid Package: Basis-1
Property Package: Peng-Robinson

COMPOSITION

Liquid Phase (continued)

Phase Fraction 7.339e-003

COMPONENTS	MOLAR FLOW (kgmole/h)	MOLE FRACTION	MASS FLOW (tonne/d)	MASS FRACTION	LIQUID VOLUME FLOW (m3/h)	LIQUID VOLUME FRACTION
NBP[1]1819*	0.0000	0.0000	0.0000	0.0000	0.0000	0.0000
NBP[1]1913*	0.0000	0.0000	0.0000	0.0000	0.0000	0.0000
Total	0.1765	1.0000	2.8731	1.0000	0.1200	1.0000

Phase Fraction

COMPONENTS	MOLAR FLOW	MOLE FRACTION	MASS FLOW	MASS FRACTION	LIQUID VOLUME FLOW	LIQUID VOLUME FRACTION

* Specified by user.

Material Stream: 10 (continued)

Fluid Package: Basis-1
Property Package: Peng-Robinson

COMPOSITION

COMPONENTS	MOLAR FLOW	MOLE FRACTION	MASS FLOW	MASS FRACTION	LIQUID VOLUME FLOW	Phase Fraction LIQUID VOLUME FRACTION
Total		1.0000		1.0000		1.0000

Material Stream: 11

Fluid Package: Basis-1
Property Package: Peng-Robinson

CONDITIONS

		Overall	Vapour Phase	Liquid Phase	Liquid Phase
Vapour / Phase Fraction		1.0000	1.0000	0.0000	0.0000
Temperature:	(F)	69.65	69.65	69.65	69.65
Pressure:	(psig)	20.00	20.00	20.00	20.00
Molar Flow	(MMSCFD)	0.2539	0.2539	0.0000	0.0000
Mass Flow	(tonne/d)	9.176	9.176	0.0000	0.0000
Std Ideal Liq Vol Flow	(barrel/day)	134.8	134.8	0.0000	0.0000
Molar Enthalpy	(kJ/kgmole)	-1.031e+005	-1.031e+005	-1.459e+006	-3.614e+005
Molar Entropy	(kJ/kgmole-C)	181.2	181.2	1399	239.1
Heat Flow	(MMBtu/hr)	-1.236	-1.236	0.0000	0.0000
Liq Vol Flow @Std Cond	(barrel/day)	4.477e+004 *	4.477e+004	0.0000	0.0000

PROPERTIES

		Overall	Vapour Phase	Liquid Phase	Liquid Phase
Molecular Weight		30.24	30.24	678.3	164.3
Molar Density	(kgmole/m3)	9.963e-002	9.963e-002	1.449	4.891
Mass Density	(kg/m3)	3.013	3.013	982.9	803.8
Act. Volume Flow	(barrel/day)	1.916e+004	1.916e+004	0.0000	0.0000
Mass Enthalpy	(kJ/kg)	-3410	-3410	-2151	-2199
Mass Entropy	(kJ/kg-C)	5.993	5.993	2.062	1.455
Heat Capacity	(kJ/kgmole-C)	54.03	54.03	1255	316.9
Mass Heat Capacity	(kJ/kg-C)	1.787	1.787	1.851	1.928
LHV Molar Basis (Std)	(Btu/SCF)	---	---	---	---
LHV Mass Basis (Std)	(kJ/kg)	---	---	---	---
Phase Fraction [Vol. Basis]		1.000	1.000	---	---
Phase Fraction [Mass Basis]		1.000	1.000	0.0000	0.0000
Partial Pressure of CO2	(psig)	-13.15	---	---	---
Cost Based on Flow	(Cost/s)	0.0000	0.0000	0.0000	0.0000
Act. Gas Flow	(ACT_m3/h)	126.9	126.9	---	---
Avg. Liq. Density	(kgmole/m3)	14.16	14.16	1.471	4.860
Specific Heat	(kJ/kgmole-C)	54.03	54.03	1255	316.9
Std. Gas Flow	(STD_m3/h)	299.0	299.0	0.0000	0.0000
Std. Ideal Liq. Mass Density	(kg/m3)	428.2	428.2	997.6	798.6
Act. Liq. Flow	(barrel/day)	0.0000	---	---	0.0000
Z Factor		---	0.9820	6.752e-002	2.000e-002
Watson K		15.80	15.80	11.93	11.89
User Property		---	---	---	---
Partial Pressure of H2S	(psig)	-14.70	---	---	---
Cp/(Cp - R)		1.182	1.182	1.007	1.027

* Specified by user.

Material Stream: 11 (continued)

Fluid Package: Basis-1
Property Package: Peng-Robinson

PROPERTIES

	Overall	Vapour Phase	Liquid Phase	Liquid Phase
Cp/Cv	1.197	1.197	1.098	1.027
Heat of Vap. (kJ/kgmole)	2.207e+004	---	---	---
Kinematic Viscosity (cSt)	3.405	3.405	2.084e+004	2.134
Liq. Mass Density (Std. Cond) (kg/m3)	1.289	1.289	986.5	808.5
Liq. Vol. Flow (Std. Cond) (barrel/day)	4.477e+004	4.477e+004	0.0000	0.0000
Liquid Fraction	0.0000	0.0000	1.000	1.000
Molar Volume (m3/kgmole)	10.04	10.04	0.6901	0.2044
Mass Heat of Vap. (kJ/kg)	729.8	---	---	---
Phase Fraction [Molar Basis]	1.0000	1.0000	0.0000	0.0000
Surface Tension (dyne/cm)	---	---	26.49	22.26
Thermal Conductivity (W/m-K)	2.413e-002	2.413e-002	0.1376	0.1140
Viscosity (cP)	1.026e-002	1.026e-002	2.049e+004	1.716
Cv (Semi-Ideal) (kJ/kgmole-C)	45.71	45.71	1247	---
Mass Cv (Semi-Ideal) (kJ/kg-C)	1.512	1.512	1.839	---
Cv (kJ/kgmole-C)	45.13	45.13	1143	---
Mass Cv (kJ/kg-C)	1.493	1.493	1.685	---
Cv (Ent. Method) (kJ/kgmole-C)	---	---	1201	---
Mass Cv (Ent. Method) (kJ/kg-C)	---	---	1.770	---
Cp/Cv (Ent. Method)	---	---	1.046	---
Reid VP at 37.8 C (psig)	1094	1094	-6.940	3.294
True VP at 37.8 C (psig)	1543	1543	26.48	29.00
Liq. Vol. Flow - Sum(Std. Cond) (barrel/day)	4.477e+004	4.477e+004	0.0000	0.0000
HHV Molar Basis (Std) (Btu/SCF)	---	---	---	---
HHV Mass Basis (Std) (kJ/kg)	---	---	---	---
CO2 Loading	---	---	---	---
CO2 App ML Con (kgmole/m3)	---	---	---	---
CO2 App WT Con (kgmol/kg)	---	---	---	---
Phase Fraction [Act. Vol. Basis]	1.000	1.000	0.0000	0.0000
Mass Exergy (kJ/kg)	69.66	---	---	---
Viscosity Index	-5.927	---	---	---
Ideal Gas Cp/Cv	1.185	1.185	1.008	1.034
Ideal Gas Cp (kJ/kgmole-C)	53.38	53.38	1035	250.7
Mass Ideal Gas Cp (kJ/kg-C)	1.765	1.765	1.526	1.526
Bubble Point Pressure (psig)	1462	---	---	---

COMPOSITION

Overall Phase

Vapour Fraction 1.0000

COMPONENTS	MOLAR FLOW (kgmole/h)	MOLE FRACTION	MASS FLOW (tonne/d)	MASS FRACTION	LIQUID VOLUME FLOW (m3/h)	LIQUID VOLUME FRACTION
Methane	6.2004	0.4903	2.3874	0.2602	0.3322	0.3721
Ethane	2.2300	0.1763	1.6093	0.1754	0.1885	0.2111
Propane	2.0440	0.1616	2.1632	0.2357	0.1779	0.1992
i-Butane	0.3283	0.0260	0.4580	0.0499	0.0340	0.0380
n-Butane	0.6507	0.0515	0.9077	0.0989	0.0648	0.0726
i-Pentane	0.1150	0.0091	0.1991	0.0217	0.0133	0.0149
n-Pentane	0.1163	0.0092	0.2014	0.0219	0.0133	0.0149
n-Hexane	0.0865	0.0068	0.1790	0.0195	0.0113	0.0126
Nitrogen	0.0875	0.0069	0.0588	0.0064	0.0030	0.0034
CO2	0.5630	0.0445	0.5947	0.0648	0.0300	0.0336
H2S	0.0001	0.0000	0.0001	0.0000	0.0000	0.0000
H2O	0.0215	0.0017	0.0093	0.0010	0.0004	0.0004
NBP[1]95*	0.0363	0.0029	0.0591	0.0064	0.0036	0.0041
NBP[1]121*	0.0330	0.0026	0.0578	0.0063	0.0035	0.0039
NBP[1]147*	0.0304	0.0024	0.0585	0.0064	0.0035	0.0039
NBP[1]171*	0.0403	0.0032	0.0847	0.0092	0.0050	0.0056
NBP[1]195*	0.0348	0.0028	0.0782	0.0085	0.0045	0.0051

* Specified by user.

Material Stream: 11 (continued)

Fluid Package: Basis-1
Property Package: Peng-Robinson

COMPOSITION

Overall Phase (continued)

Vapour Fraction 1.0000

COMPONENTS	MOLAR FLOW (kgmole/h)	MOLE FRACTION	MASS FLOW (tonne/d)	MASS FRACTION	LIQUID VOLUME FLOW (m3/h)	LIQUID VOLUME FRACTION
NBP[1]222*	0.0150	0.0012	0.0363	0.0040	0.0021	0.0023
NBP[1]248*	0.0071	0.0006	0.0186	0.0020	0.0010	0.0012
NBP[1]273*	0.0032	0.0003	0.0088	0.0010	0.0005	0.0006
NBP[1]299*	0.0013	0.0001	0.0039	0.0004	0.0002	0.0002
NBP[1]325*	0.0005	0.0000	0.0015	0.0002	0.0001	0.0001
NBP[1]351*	0.0002	0.0000	0.0006	0.0001	0.0000	0.0000
NBP[1]377*	0.0001	0.0000	0.0003	0.0000	0.0000	0.0000
NBP[1]402*	0.0000	0.0000	0.0001	0.0000	0.0000	0.0000
NBP[1]428*	0.0000	0.0000	0.0001	0.0000	0.0000	0.0000
NBP[1]454*	0.0000	0.0000	0.0000	0.0000	0.0000	0.0000
NBP[1]480*	0.0000	0.0000	0.0000	0.0000	0.0000	0.0000
NBP[1]505*	0.0000	0.0000	0.0000	0.0000	0.0000	0.0000
NBP[1]531*	0.0000	0.0000	0.0000	0.0000	0.0000	0.0000
NBP[1]557*	0.0000	0.0000	0.0000	0.0000	0.0000	0.0000
NBP[1]582*	0.0000	0.0000	0.0000	0.0000	0.0000	0.0000
NBP[1]608*	0.0000	0.0000	0.0000	0.0000	0.0000	0.0000
NBP[1]634*	0.0000	0.0000	0.0000	0.0000	0.0000	0.0000
NBP[1]659*	0.0000	0.0000	0.0000	0.0000	0.0000	0.0000
NBP[1]685*	0.0000	0.0000	0.0000	0.0000	0.0000	0.0000
NBP[1]711*	0.0000	0.0000	0.0000	0.0000	0.0000	0.0000
NBP[1]736*	0.0000	0.0000	0.0000	0.0000	0.0000	0.0000
NBP[1]762*	0.0000	0.0000	0.0000	0.0000	0.0000	0.0000
NBP[1]788*	0.0000	0.0000	0.0000	0.0000	0.0000	0.0000
NBP[1]825*	0.0000	0.0000	0.0000	0.0000	0.0000	0.0000
NBP[1]873*	0.0000	0.0000	0.0000	0.0000	0.0000	0.0000
NBP[1]926*	0.0000	0.0000	0.0000	0.0000	0.0000	0.0000
NBP[1]978*	0.0000	0.0000	0.0000	0.0000	0.0000	0.0000
NBP[1]1021*	0.0000	0.0000	0.0000	0.0000	0.0000	0.0000
NBP[1]1075*	0.0000	0.0000	0.0000	0.0000	0.0000	0.0000
NBP[1]1123*	0.0000	0.0000	0.0000	0.0000	0.0000	0.0000
NBP[1]1173*	0.0000	0.0000	0.0000	0.0000	0.0000	0.0000
NBP[1]1250*	0.0000	0.0000	0.0000	0.0000	0.0000	0.0000
NBP[1]1339*	0.0000	0.0000	0.0000	0.0000	0.0000	0.0000
NBP[1]1432*	0.0000	0.0000	0.0000	0.0000	0.0000	0.0000
NBP[1]1528*	0.0000	0.0000	0.0000	0.0000	0.0000	0.0000
NBP[1]1637*	0.0000	0.0000	0.0000	0.0000	0.0000	0.0000
NBP[1]1732*	0.0000	0.0000	0.0000	0.0000	0.0000	0.0000
NBP[1]1819*	0.0000	0.0000	0.0000	0.0000	0.0000	0.0000
NBP[1]1913*	0.0000	0.0000	0.0000	0.0000	0.0000	0.0000
Total	12.6455	1.0000	9.1765	1.0000	0.8929	1.0000

Vapour Phase

Phase Fraction 1.000

COMPONENTS	MOLAR FLOW (kgmole/h)	MOLE FRACTION	MASS FLOW (tonne/d)	MASS FRACTION	LIQUID VOLUME FLOW (m3/h)	LIQUID VOLUME FRACTION
Methane	6.2004	0.4903	2.3874	0.2602	0.3322	0.3721
Ethane	2.2300	0.1763	1.6093	0.1754	0.1885	0.2111
Propane	2.0440	0.1616	2.1632	0.2357	0.1779	0.1992
i-Butane	0.3283	0.0260	0.4580	0.0499	0.0340	0.0380
n-Butane	0.6507	0.0515	0.9077	0.0989	0.0648	0.0726
i-Pentane	0.1150	0.0091	0.1991	0.0217	0.0133	0.0149
n-Pentane	0.1163	0.0092	0.2014	0.0219	0.0133	0.0149
n-Hexane	0.0865	0.0068	0.1790	0.0195	0.0113	0.0126
Nitrogen	0.0875	0.0069	0.0588	0.0064	0.0030	0.0034
CO2	0.5630	0.0445	0.5947	0.0648	0.0300	0.0336

* Specified by user.

Material Stream: 11 (continued)

Fluid Package: Basis-1
Property Package: Peng-Robinson

COMPOSITION

Vapour Phase (continued)

Phase Fraction 1.000

COMPONENTS	MOLAR FLOW (kgmole/h)	MOLE FRACTION	MASS FLOW (tonne/d)	MASS FRACTION	LIQUID VOLUME FLOW (m3/h)	LIQUID VOLUME FRACTION
H2S	0.0001	0.0000	0.0001	0.0000	0.0000	0.0000
H2O	0.0215	0.0017	0.0093	0.0010	0.0004	0.0004
NBP[1]95*	0.0363	0.0029	0.0591	0.0064	0.0036	0.0041
NBP[1]121*	0.0330	0.0026	0.0578	0.0063	0.0035	0.0039
NBP[1]147*	0.0304	0.0024	0.0585	0.0064	0.0035	0.0039
NBP[1]171*	0.0403	0.0032	0.0847	0.0092	0.0050	0.0056
NBP[1]195*	0.0348	0.0028	0.0782	0.0085	0.0045	0.0051
NBP[1]222*	0.0150	0.0012	0.0363	0.0040	0.0021	0.0023
NBP[1]248*	0.0071	0.0006	0.0186	0.0020	0.0010	0.0012
NBP[1]273*	0.0032	0.0003	0.0088	0.0010	0.0005	0.0006
NBP[1]299*	0.0013	0.0001	0.0039	0.0004	0.0002	0.0002
NBP[1]325*	0.0005	0.0000	0.0015	0.0002	0.0001	0.0001
NBP[1]351*	0.0002	0.0000	0.0006	0.0001	0.0000	0.0000
NBP[1]377*	0.0001	0.0000	0.0003	0.0000	0.0000	0.0000
NBP[1]402*	0.0000	0.0000	0.0001	0.0000	0.0000	0.0000
NBP[1]428*	0.0000	0.0000	0.0001	0.0000	0.0000	0.0000
NBP[1]454*	0.0000	0.0000	0.0000	0.0000	0.0000	0.0000
NBP[1]480*	0.0000	0.0000	0.0000	0.0000	0.0000	0.0000
NBP[1]505*	0.0000	0.0000	0.0000	0.0000	0.0000	0.0000
NBP[1]531*	0.0000	0.0000	0.0000	0.0000	0.0000	0.0000
NBP[1]557*	0.0000	0.0000	0.0000	0.0000	0.0000	0.0000
NBP[1]582*	0.0000	0.0000	0.0000	0.0000	0.0000	0.0000
NBP[1]608*	0.0000	0.0000	0.0000	0.0000	0.0000	0.0000
NBP[1]634*	0.0000	0.0000	0.0000	0.0000	0.0000	0.0000
NBP[1]659*	0.0000	0.0000	0.0000	0.0000	0.0000	0.0000
NBP[1]685*	0.0000	0.0000	0.0000	0.0000	0.0000	0.0000
NBP[1]711*	0.0000	0.0000	0.0000	0.0000	0.0000	0.0000
NBP[1]736*	0.0000	0.0000	0.0000	0.0000	0.0000	0.0000
NBP[1]762*	0.0000	0.0000	0.0000	0.0000	0.0000	0.0000
NBP[1]788*	0.0000	0.0000	0.0000	0.0000	0.0000	0.0000
NBP[1]825*	0.0000	0.0000	0.0000	0.0000	0.0000	0.0000
NBP[1]873*	0.0000	0.0000	0.0000	0.0000	0.0000	0.0000
NBP[1]926*	0.0000	0.0000	0.0000	0.0000	0.0000	0.0000
NBP[1]978*	0.0000	0.0000	0.0000	0.0000	0.0000	0.0000
NBP[1]1021*	0.0000	0.0000	0.0000	0.0000	0.0000	0.0000
NBP[1]1075*	0.0000	0.0000	0.0000	0.0000	0.0000	0.0000
NBP[1]1123*	0.0000	0.0000	0.0000	0.0000	0.0000	0.0000
NBP[1]1173*	0.0000	0.0000	0.0000	0.0000	0.0000	0.0000
NBP[1]1250*	0.0000	0.0000	0.0000	0.0000	0.0000	0.0000
NBP[1]1339*	0.0000	0.0000	0.0000	0.0000	0.0000	0.0000
NBP[1]1432*	0.0000	0.0000	0.0000	0.0000	0.0000	0.0000
NBP[1]1528*	0.0000	0.0000	0.0000	0.0000	0.0000	0.0000
NBP[1]1637*	0.0000	0.0000	0.0000	0.0000	0.0000	0.0000
NBP[1]1732*	0.0000	0.0000	0.0000	0.0000	0.0000	0.0000
NBP[1]1819*	0.0000	0.0000	0.0000	0.0000	0.0000	0.0000
NBP[1]1913*	0.0000	0.0000	0.0000	0.0000	0.0000	0.0000
Total	12.6455	1.0000	9.1765	1.0000	0.8929	1.0000

Liquid Phase

Phase Fraction 0.0000

COMPONENTS	MOLAR FLOW (kgmole/h)	MOLE FRACTION	MASS FLOW (tonne/d)	MASS FRACTION	LIQUID VOLUME FLOW (m3/h)	LIQUID VOLUME FRACTION
Methane	0.0000	0.0066	0.0000	0.0002	0.0000	0.0005
Ethane	0.0000	0.0083	0.0000	0.0004	0.0000	0.0010
Propane	0.0000	0.0215	0.0000	0.0014	0.0000	0.0027

* Specified by user.

Material Stream: 11 (continued)

Fluid Package: Basis-1
Property Package: Peng-Robinson

COMPOSITION

Liquid Phase (continued)

Phase Fraction 0.0000

COMPONENTS	MOLAR FLOW (kgmole/h)	MOLE FRACTION	MASS FLOW (tonne/d)	MASS FRACTION	LIQUID VOLUME FLOW (m3/h)	LIQUID VOLUME FRACTION
i-Butane	0.0000	0.0080	0.0000	0.0007	0.0000	0.0012
n-Butane	0.0000	0.0198	0.0000	0.0017	0.0000	0.0029
i-Pentane	0.0000	0.0082	0.0000	0.0009	0.0000	0.0014
n-Pentane	0.0000	0.0102	0.0000	0.0011	0.0000	0.0017
n-Hexane	0.0000	0.0219	0.0000	0.0028	0.0000	0.0042
Nitrogen	0.0000	0.0001	0.0000	0.0000	0.0000	0.0000
CO2	0.0000	0.0019	0.0000	0.0001	0.0000	0.0001
H2S	0.0000	0.0000	0.0000	0.0000	0.0000	0.0000
H2O	0.0000	0.0001	0.0000	0.0000	0.0000	0.0000
NBP[1]95*	0.0000	0.0030	0.0000	0.0003	0.0000	0.0004
NBP[1]121*	0.0000	0.0041	0.0000	0.0004	0.0000	0.0006
NBP[1]147*	0.0000	0.0058	0.0000	0.0007	0.0000	0.0010
NBP[1]171*	0.0000	0.0117	0.0000	0.0015	0.0000	0.0021
NBP[1]195*	0.0000	0.0158	0.0000	0.0022	0.0000	0.0030
NBP[1]222*	0.0000	0.0120	0.0000	0.0018	0.0000	0.0024
NBP[1]248*	0.0000	0.0099	0.0000	0.0016	0.0000	0.0021
NBP[1]273*	0.0000	0.0078	0.0000	0.0013	0.0000	0.0018
NBP[1]299*	0.0000	0.0059	0.0000	0.0011	0.0000	0.0014
NBP[1]325*	0.0000	0.0041	0.0000	0.0008	0.0000	0.0010
NBP[1]351*	0.0000	0.0031	0.0000	0.0006	0.0000	0.0008
NBP[1]377*	0.0000	0.0027	0.0000	0.0006	0.0000	0.0008
NBP[1]402*	0.0000	0.0023	0.0000	0.0005	0.0000	0.0007
NBP[1]428*	0.0000	0.0021	0.0000	0.0005	0.0000	0.0007
NBP[1]454*	0.0000	0.0019	0.0000	0.0005	0.0000	0.0006
NBP[1]480*	0.0000	0.0019	0.0000	0.0005	0.0000	0.0007
NBP[1]505*	0.0000	0.0017	0.0000	0.0005	0.0000	0.0006
NBP[1]531*	0.0000	0.0016	0.0000	0.0005	0.0000	0.0006
NBP[1]557*	0.0000	0.0014	0.0000	0.0005	0.0000	0.0006
NBP[1]582*	0.0000	0.0013	0.0000	0.0005	0.0000	0.0006
NBP[1]608*	0.0000	0.0012	0.0000	0.0005	0.0000	0.0006
NBP[1]634*	0.0000	0.0011	0.0000	0.0005	0.0000	0.0005
NBP[1]659*	0.0000	0.0011	0.0000	0.0005	0.0000	0.0006
NBP[1]685*	0.0000	0.0011	0.0000	0.0005	0.0000	0.0006
NBP[1]711*	0.0000	0.0011	0.0000	0.0006	0.0000	0.0006
NBP[1]736*	0.0000	0.0012	0.0000	0.0006	0.0000	0.0007
NBP[1]762*	0.0000	0.0012	0.0000	0.0006	0.0000	0.0007
NBP[1]788*	0.0000	0.0012	0.0000	0.0006	0.0000	0.0007
NBP[1]825*	0.0000	0.0022	0.0000	0.0013	0.0000	0.0014
NBP[1]873*	0.0000	0.0019	0.0000	0.0012	0.0000	0.0013
NBP[1]926*	0.0000	0.0022	0.0000	0.0015	0.0000	0.0016
NBP[1]978*	0.0000	0.0033	0.0000	0.0025	0.0000	0.0027
NBP[1]1021*	0.0000	0.0028	0.0000	0.0023	0.0000	0.0024
NBP[1]1075*	0.0000	0.0044	0.0000	0.0038	0.0000	0.0040
NBP[1]1123*	0.0000	0.0101	0.0000	0.0093	0.0000	0.0096
NBP[1]1173*	0.0000	0.0245	0.0000	0.0240	0.0000	0.0246
NBP[1]1250*	0.0000	0.1597	0.0000	0.1689	0.0000	0.1714
NBP[1]1339*	0.0000	0.2043	0.0000	0.2414	0.0000	0.2407
NBP[1]1432*	0.0000	0.1454	0.0000	0.1879	0.0000	0.1844
NBP[1]1528*	0.0000	0.1021	0.0000	0.1421	0.0000	0.1377
NBP[1]1637*	0.0000	0.0717	0.0000	0.1060	0.0000	0.1015
NBP[1]1732*	0.0000	0.0497	0.0000	0.0773	0.0000	0.0732
NBP[1]1819*	0.0000	0.0000	0.0000	0.0000	0.0000	0.0000
NBP[1]1913*	0.0000	0.0000	0.0000	0.0000	0.0000	0.0000
Total	0.0000	1.0000	0.0000	1.0000	0.0000	1.0000

* Specified by user.

Material Stream: 11 (continued)

Fluid Package:	Basis-1
Property Package:	Peng-Robinson

COMPOSITION

					Phase Fraction	
COMPONENTS	MOLAR FLOW	MOLE FRACTION	MASS FLOW	MASS FRACTION	LIQUID VOLUME FLOW	LIQUID VOLUME FRACTION

* Specified by user.

Material Stream: 11 (continued)

Fluid Package: Basis-1
Property Package: Peng-Robinson

COMPOSITION

COMPONENTS	MOLAR FLOW	MOLE FRACTION	MASS FLOW	MASS FRACTION	LIQUID VOLUME FLOW	LIQUID VOLUME FRACTION (Phase Fraction)
Total		1.0000		1.0000		1.0000

Material Stream: 12

Fluid Package: Basis-1
Property Package: Peng-Robinson

CONDITIONS

		Overall	Vapour Phase			
Vapour / Phase Fraction		1.0000	1.0000			
Temperature:	(F)	96.42	96.42			
Pressure:	(psig)	20.00	20.00			
Molar Flow	(MMSCFD)	3.064	3.064			
Mass Flow	(tonne/d)	85.36	85.36			
Std Ideal Liq Vol Flow	(barrel/day)	1275	1275			
Molar Enthalpy	(kJ/kgmole)	-1.295e+005	-1.295e+005			
Molar Entropy	(kJ/kgmole-C)	182.0	182.0			
Heat Flow	(MMBtu/hr)	-18.74	-18.74			
Liq Vol Flow @Std Cond	(barrel/day)	5.428e+005 *	5.428e+005			

PROPERTIES

		Overall	Vapour Phase			
Molecular Weight		23.31	23.31			
Molar Density	(kgmole/m3)	9.373e-002	9.373e-002			
Mass Density	(kg/m3)	2.185	2.185			
Act. Volume Flow	(barrel/day)	2.458e+005	2.458e+005			
Mass Enthalpy	(kJ/kg)	-5558	-5558			
Mass Entropy	(kJ/kg-C)	7.808	7.808			
Heat Capacity	(kJ/kgmole-C)	39.14	39.14			
Mass Heat Capacity	(kJ/kg-C)	1.679	1.679			
LHV Molar Basis (Std)	(Btu/SCF)	---	---			
LHV Mass Basis (Std)	(kJ/kg)	---	---			
Phase Fraction [Vol. Basis]		1.000	1.000			
Phase Fraction [Mass Basis]		1.000	1.000			
Partial Pressure of CO2	(psig)	-8.519	---			
Cost Based on Flow	(Cost/s)	0.0000	0.0000			
Act. Gas Flow	(ACT_m3/h)	1628	1628			
Avg. Liq. Density	(kgmole/m3)	18.07	18.07			
Specific Heat	(kJ/kgmole-C)	39.14	39.14			
Std. Gas Flow	(STD_m3/h)	3608	3608			
Std. Ideal Liq. Mass Density	(kg/m3)	421.1	421.1			
Act. Liq. Flow	(barrel/day)	---	---			
Z Factor		0.9936	0.9936			
Watson K		14.71	14.71			
User Property		---	---			
Partial Pressure of H2S	(psig)	-14.70	---			
Cp/(Cp - R)		1.270	1.270			
Cp/Cv		1.280	1.280			
Heat of Vap.	(kJ/kgmole)	1.621e+004	---			
Kinematic Viscosity	(cSt)	5.703	5.703			
Liq. Mass Density (Std. Cond)	(kg/m3)	0.9891	0.9891			
Liq. Vol. Flow (Std. Cond)	(barrel/day)	5.428e+005	5.428e+005			
Liquid Fraction		0.0000	0.0000			
Molar Volume	(m3/kgmole)	10.67	10.67			

* Specified by user.

Material Stream: 12 (continued)

Fluid Package: Basis-1
Property Package: Peng-Robinson

PROPERTIES

		Overall	Vapour Phase			
Mass Heat of Vap.	(kJ/kg)	695.6	---			
Phase Fraction [Molar Basis]		1.0000	1.0000			
Surface Tension	(dyne/cm)	---	---			
Thermal Conductivity	(W/m-K)	2.969e-002	2.969e-002			
Viscosity	(cP)	1.246e-002	1.246e-002			
Cv (Semi-Ideal)	(kJ/kgmole-C)	30.83	30.83			
Mass Cv (Semi-Ideal)	(kJ/kg-C)	1.323	1.323			
Cv	(kJ/kgmole-C)	30.58	30.58			
Mass Cv	(kJ/kg-C)	1.312	1.312			
Cv (Ent. Method)	(kJ/kgmole-C)	---	---			
Mass Cv (Ent. Method)	(kJ/kg-C)	---	---			
Cp/Cv (Ent. Method)		---	---			
Reid VP at 37.8 C	(psig)	---	---			
True VP at 37.8 C	(psig)	---	---			
Liq. Vol. Flow - Sum(Std. Cond)	(barrel/day)	5.428e+005	5.428e+005			
HHV Molar Basis (Std)	(Btu/SCF)	---	---			
HHV Mass Basis (Std)	(kJ/kg)	---	---			
CO2 Loading		---	---			
CO2 App ML Con	(kgmole/m3)	---	---			
CO2 App WT Con	(kgmol/kg)	---	---			
Phase Fraction [Act. Vol. Basis]		1.000	1.000			
Mass Exergy	(kJ/kg)	91.24	---			
Viscosity Index		-9.214	---			
Ideal Gas Cp/Cv		1.272	1.272			
Ideal Gas Cp	(kJ/kgmole-C)	38.86	38.86			
Mass Ideal Gas Cp	(kJ/kg-C)	1.667	1.667			
Bubble Point Pressure	(psig)	---	---			

COMPOSITION

Overall Phase

Vapour Fraction 1.0000

COMPONENTS	MOLAR FLOW (kgmole/h)	MOLE FRACTION	MASS FLOW (tonne/d)	MASS FRACTION	LIQUID VOLUME FLOW (m3/h)	LIQUID VOLUME FRACTION
Methane	106.6484	0.6989	41.0628	0.4810	5.7147	0.6766
Ethane	7.4635	0.0489	5.3862	0.0631	0.6310	0.0747
Propane	2.4103	0.0158	2.5509	0.0299	0.2098	0.0248
i-Butane	0.3493	0.0023	0.4872	0.0057	0.0361	0.0043
n-Butane	0.6716	0.0044	0.9369	0.0110	0.0669	0.0079
i-Pentane	0.1255	0.0008	0.2173	0.0025	0.0145	0.0017
n-Pentane	0.1163	0.0008	0.2014	0.0024	0.0133	0.0016
n-Hexane	0.2959	0.0019	0.6120	0.0072	0.0385	0.0046
Nitrogen	7.1286	0.0467	4.7927	0.0561	0.2476	0.0293
CO2	27.1702	0.1780	28.6981	0.3362	1.4488	0.1715
H2S	0.0001	0.0000	0.0001	0.0000	0.0000	0.0000
H2O	0.0215	0.0001	0.0093	0.0001	0.0004	0.0000
NBP[1]95*	0.0363	0.0002	0.0591	0.0007	0.0036	0.0004
NBP[1]121*	0.0330	0.0002	0.0578	0.0007	0.0035	0.0004
NBP[1]147*	0.0304	0.0002	0.0585	0.0007	0.0035	0.0004
NBP[1]171*	0.0403	0.0003	0.0847	0.0010	0.0050	0.0006
NBP[1]195*	0.0348	0.0002	0.0782	0.0009	0.0045	0.0005
NBP[1]222*	0.0150	0.0001	0.0363	0.0004	0.0021	0.0002
NBP[1]248*	0.0071	0.0000	0.0186	0.0002	0.0010	0.0001
NBP[1]273*	0.0032	0.0000	0.0088	0.0001	0.0005	0.0001
NBP[1]299*	0.0013	0.0000	0.0039	0.0000	0.0002	0.0000
NBP[1]325*	0.0005	0.0000	0.0015	0.0000	0.0001	0.0000
NBP[1]351*	0.0002	0.0000	0.0006	0.0000	0.0000	0.0000
NBP[1]377*	0.0001	0.0000	0.0003	0.0000	0.0000	0.0000

* Specified by user.

Material Stream: 12 (continued)

Fluid Package: Basis-1
Property Package: Peng-Robinson

COMPOSITION

Overall Phase (continued)

Vapour Fraction 1.0000

COMPONENTS	MOLAR FLOW (kgmole/h)	MOLE FRACTION	MASS FLOW (tonne/d)	MASS FRACTION	LIQUID VOLUME FLOW (m3/h)	LIQUID VOLUME FRACTION
NBP[1]402*	0.0000	0.0000	0.0001	0.0000	0.0000	0.0000
NBP[1]428*	0.0000	0.0000	0.0001	0.0000	0.0000	0.0000
NBP[1]454*	0.0000	0.0000	0.0000	0.0000	0.0000	0.0000
NBP[1]480*	0.0000	0.0000	0.0000	0.0000	0.0000	0.0000
NBP[1]505*	0.0000	0.0000	0.0000	0.0000	0.0000	0.0000
NBP[1]531*	0.0000	0.0000	0.0000	0.0000	0.0000	0.0000
NBP[1]557*	0.0000	0.0000	0.0000	0.0000	0.0000	0.0000
NBP[1]582*	0.0000	0.0000	0.0000	0.0000	0.0000	0.0000
NBP[1]608*	0.0000	0.0000	0.0000	0.0000	0.0000	0.0000
NBP[1]634*	0.0000	0.0000	0.0000	0.0000	0.0000	0.0000
NBP[1]659*	0.0000	0.0000	0.0000	0.0000	0.0000	0.0000
NBP[1]685*	0.0000	0.0000	0.0000	0.0000	0.0000	0.0000
NBP[1]711*	0.0000	0.0000	0.0000	0.0000	0.0000	0.0000
NBP[1]736*	0.0000	0.0000	0.0000	0.0000	0.0000	0.0000
NBP[1]762*	0.0000	0.0000	0.0000	0.0000	0.0000	0.0000
NBP[1]788*	0.0000	0.0000	0.0000	0.0000	0.0000	0.0000
NBP[1]825*	0.0000	0.0000	0.0000	0.0000	0.0000	0.0000
NBP[1]873*	0.0000	0.0000	0.0000	0.0000	0.0000	0.0000
NBP[1]926*	0.0000	0.0000	0.0000	0.0000	0.0000	0.0000
NBP[1]978*	0.0000	0.0000	0.0000	0.0000	0.0000	0.0000
NBP[1]1021*	0.0000	0.0000	0.0000	0.0000	0.0000	0.0000
NBP[1]1075*	0.0000	0.0000	0.0000	0.0000	0.0000	0.0000
NBP[1]1123*	0.0000	0.0000	0.0000	0.0000	0.0000	0.0000
NBP[1]1173*	0.0000	0.0000	0.0000	0.0000	0.0000	0.0000
NBP[1]1250*	0.0000	0.0000	0.0000	0.0000	0.0000	0.0000
NBP[1]1339*	0.0000	0.0000	0.0000	0.0000	0.0000	0.0000
NBP[1]1432*	0.0000	0.0000	0.0000	0.0000	0.0000	0.0000
NBP[1]1528*	0.0000	0.0000	0.0000	0.0000	0.0000	0.0000
NBP[1]1637*	0.0000	0.0000	0.0000	0.0000	0.0000	0.0000
NBP[1]1732*	0.0000	0.0000	0.0000	0.0000	0.0000	0.0000
NBP[1]1819*	0.0000	0.0000	0.0000	0.0000	0.0000	0.0000
NBP[1]1913*	0.0000	0.0000	0.0000	0.0000	0.0000	0.0000
Total	152.6034	1.0000	85.3633	1.0000	8.4457	1.0000

Vapour Phase

Phase Fraction 1.000

COMPONENTS	MOLAR FLOW (kgmole/h)	MOLE FRACTION	MASS FLOW (tonne/d)	MASS FRACTION	LIQUID VOLUME FLOW (m3/h)	LIQUID VOLUME FRACTION
Methane	106.6484	0.6989	41.0628	0.4810	5.7147	0.6766
Ethane	7.4635	0.0489	5.3862	0.0631	0.6310	0.0747
Propane	2.4103	0.0158	2.5509	0.0299	0.2098	0.0248
i-Butane	0.3493	0.0023	0.4872	0.0057	0.0361	0.0043
n-Butane	0.6716	0.0044	0.9369	0.0110	0.0669	0.0079
i-Pentane	0.1255	0.0008	0.2173	0.0025	0.0145	0.0017
n-Pentane	0.1163	0.0008	0.2014	0.0024	0.0133	0.0016
n-Hexane	0.2959	0.0019	0.6120	0.0072	0.0385	0.0046
Nitrogen	7.1286	0.0467	4.7927	0.0561	0.2476	0.0293
CO2	27.1702	0.1780	28.6981	0.3362	1.4488	0.1715
H2S	0.0001	0.0000	0.0001	0.0000	0.0000	0.0000
H2O	0.0215	0.0001	0.0093	0.0001	0.0004	0.0000
NBP[1]95*	0.0363	0.0002	0.0591	0.0007	0.0036	0.0004
NBP[1]121*	0.0330	0.0002	0.0578	0.0007	0.0035	0.0004
NBP[1]147*	0.0304	0.0002	0.0585	0.0007	0.0035	0.0004
NBP[1]171*	0.0403	0.0003	0.0847	0.0010	0.0050	0.0006
NBP[1]195*	0.0348	0.0002	0.0782	0.0009	0.0045	0.0005

Licensed to: PETROCHEMICAL ENGINEERIN
* Specified by user.

Material Stream: 12 (continued)

Fluid Package: Basis-1
Property Package: Peng-Robinson

COMPOSITION

Vapour Phase (continued)

Phase Fraction 1.000

COMPONENTS	MOLAR FLOW (kgmole/h)	MOLE FRACTION	MASS FLOW (tonne/d)	MASS FRACTION	LIQUID VOLUME FLOW (m3/h)	LIQUID VOLUME FRACTION
NBP[1]222*	0.0150	0.0001	0.0363	0.0004	0.0021	0.0002
NBP[1]248*	0.0071	0.0000	0.0186	0.0002	0.0010	0.0001
NBP[1]273*	0.0032	0.0000	0.0088	0.0001	0.0005	0.0001
NBP[1]299*	0.0013	0.0000	0.0039	0.0000	0.0002	0.0000
NBP[1]325*	0.0005	0.0000	0.0015	0.0000	0.0001	0.0000
NBP[1]351*	0.0002	0.0000	0.0006	0.0000	0.0000	0.0000
NBP[1]377*	0.0001	0.0000	0.0003	0.0000	0.0000	0.0000
NBP[1]402*	0.0000	0.0000	0.0001	0.0000	0.0000	0.0000
NBP[1]428*	0.0000	0.0000	0.0001	0.0000	0.0000	0.0000
NBP[1]454*	0.0000	0.0000	0.0000	0.0000	0.0000	0.0000
NBP[1]480*	0.0000	0.0000	0.0000	0.0000	0.0000	0.0000
NBP[1]505*	0.0000	0.0000	0.0000	0.0000	0.0000	0.0000
NBP[1]531*	0.0000	0.0000	0.0000	0.0000	0.0000	0.0000
NBP[1]557*	0.0000	0.0000	0.0000	0.0000	0.0000	0.0000
NBP[1]582*	0.0000	0.0000	0.0000	0.0000	0.0000	0.0000
NBP[1]608*	0.0000	0.0000	0.0000	0.0000	0.0000	0.0000
NBP[1]634*	0.0000	0.0000	0.0000	0.0000	0.0000	0.0000
NBP[1]659*	0.0000	0.0000	0.0000	0.0000	0.0000	0.0000
NBP[1]685*	0.0000	0.0000	0.0000	0.0000	0.0000	0.0000
NBP[1]711*	0.0000	0.0000	0.0000	0.0000	0.0000	0.0000
NBP[1]736*	0.0000	0.0000	0.0000	0.0000	0.0000	0.0000
NBP[1]762*	0.0000	0.0000	0.0000	0.0000	0.0000	0.0000
NBP[1]788*	0.0000	0.0000	0.0000	0.0000	0.0000	0.0000
NBP[1]825*	0.0000	0.0000	0.0000	0.0000	0.0000	0.0000
NBP[1]873*	0.0000	0.0000	0.0000	0.0000	0.0000	0.0000
NBP[1]926*	0.0000	0.0000	0.0000	0.0000	0.0000	0.0000
NBP[1]978*	0.0000	0.0000	0.0000	0.0000	0.0000	0.0000
NBP[1]1021*	0.0000	0.0000	0.0000	0.0000	0.0000	0.0000
NBP[1]1075*	0.0000	0.0000	0.0000	0.0000	0.0000	0.0000
NBP[1]1123*	0.0000	0.0000	0.0000	0.0000	0.0000	0.0000
NBP[1]1173*	0.0000	0.0000	0.0000	0.0000	0.0000	0.0000
NBP[1]1250*	0.0000	0.0000	0.0000	0.0000	0.0000	0.0000
NBP[1]1339*	0.0000	0.0000	0.0000	0.0000	0.0000	0.0000
NBP[1]1432*	0.0000	0.0000	0.0000	0.0000	0.0000	0.0000
NBP[1]1528*	0.0000	0.0000	0.0000	0.0000	0.0000	0.0000
NBP[1]1637*	0.0000	0.0000	0.0000	0.0000	0.0000	0.0000
NBP[1]1732*	0.0000	0.0000	0.0000	0.0000	0.0000	0.0000
NBP[1]1819*	0.0000	0.0000	0.0000	0.0000	0.0000	0.0000
NBP[1]1913*	0.0000	0.0000	0.0000	0.0000	0.0000	0.0000
Total	152.6034	1.0000	85.3633	1.0000	8.4457	1.0000

Material Stream: 13

Fluid Package: Basis-1
Property Package: Peng-Robinson

CONDITIONS

		Overall	Vapour Phase	Liquid Phase	Liquid Phase
Vapour / Phase Fraction		0.0000	0.0000	0.0155	0.9845
Temperature:	(F)	69.65	69.65	69.65	69.65
Pressure:	(psig)	20.00	20.00	20.00	20.00
Molar Flow	(MMSCFD)	0.2289	0.0000	3.544e-003	0.2254
Mass Flow	(tonne/d)	47.15	0.0000	2.873	44.27
Std Ideal Liq Vol Flow	(barrel/day)	366.8	0.0000	18.12	348.7
Molar Enthalpy	(kJ/kgmole)	-3.784e+005	-1.031e+005	-1.459e+006	-3.614e+005
Molar Entropy	(kJ/kgmole-C)	257.0	181.2	1399	239.1

* Specified by user.

Material Stream: 13 (continued)

Fluid Package: Basis-1
Property Package: Peng-Robinson

CONDITIONS

	Overall	Vapour Phase	Liquid Phase	Liquid Phase
Heat Flow (MMBtu/hr)	-4.089	0.0000	-0.2441	-3.845
Liq Vol Flow @Std Cond (barrel/day)	363.0 *	0.0000	18.32	344.4

PROPERTIES

	Overall	Vapour Phase	Liquid Phase	Liquid Phase
Molecular Weight	172.3	30.24	678.3	164.3
Molar Density (kgmole/m3)	4.718	9.963e-002	1.449	4.891
Mass Density (kg/m3)	812.8	3.013	982.9	803.8
Act. Volume Flow (barrel/day)	364.8	0.0000	18.39	346.4
Mass Enthalpy (kJ/kg)	-2196	-3410	-2151	-2199
Mass Entropy (kJ/kg-C)	1.492	5.993	2.062	1.455
Heat Capacity (kJ/kgmole-C)	331.4	54.03	1255	316.9
Mass Heat Capacity (kJ/kg-C)	1.924	1.787	1.851	1.928
LHV Molar Basis (Std) (Btu/SCF)	---	---	---	---
LHV Mass Basis (Std) (kJ/kg)	---	---	---	---
Phase Fraction [Vol. Basis]	---	---	4.939e-002	0.9506
Phase Fraction [Mass Basis]	0.0000	0.0000	6.094e-002	0.9391
Partial Pressure of CO2 (psig)	-14.70	---	---	---
Cost Based on Flow (Cost/s)	0.0000	0.0000	0.0000	0.0000
Act. Gas Flow (ACT_m3/h)	---	---	---	---
Avg. Liq. Density (kgmole/m3)	4.692	14.16	1.471	4.860
Specific Heat (kJ/kgmole-C)	331.4	54.03	1255	316.9
Std. Gas Flow (STD_m3/h)	269.6	0.0000	4.173	265.4
Std. Ideal Liq. Mass Density (kg/m3)	808.4	428.2	997.6	798.6
Act. Liq. Flow (barrel/day)	364.8	---	18.39	346.4
Z Factor	---	0.9820	6.752e-002	2.000e-002
Watson K	11.86	15.80	11.93	11.89
User Property	---	---	---	---
Partial Pressure of H2S (psig)	-14.70	---	---	---
Cp/(Cp - R)	1.026	1.182	1.007	1.027
Cp/Cv	1.026	1.197	1.098	1.027
Heat of Vap. (kJ/kgmole)	3.302e+005	---	---	---
Kinematic Viscosity (cSt)	3.040	3.405	2.084e+004	2.134
Liq. Mass Density (Std. Cond) (kg/m3)	817.0	1.289	986.5	808.5
Liq. Vol. Flow (Std. Cond) (barrel/day)	363.0	0.0000	18.32	344.4
Liquid Fraction	1.000	0.0000	1.000	1.000
Molar Volume (m3/kgmole)	0.2120	10.04	0.6901	0.2044
Mass Heat of Vap. (kJ/kg)	1916	---	---	---
Phase Fraction [Molar Basis]	0.0000	0.0000	0.0155	0.9845
Surface Tension (dyne/cm)	---	---	26.49	22.26
Thermal Conductivity (W/m-K)	0.1150	2.413e-002	0.1376	0.1140
Viscosity (cP)	3.040	1.026e-002	2.049e+004	1.716
Cv (Semi-Ideal) (kJ/kgmole-C)	323.1	45.71	1247	---
Mass Cv (Semi-Ideal) (kJ/kg-C)	1.875	1.512	1.839	---
Cv (kJ/kgmole-C)	323.1	45.13	1143	---
Mass Cv (kJ/kg-C)	1.875	1.493	1.685	---
Cv (Ent. Method) (kJ/kgmole-C)	---	---	1201	---
Mass Cv (Ent. Method) (kJ/kg-C)	---	---	1.770	---
Cp/Cv (Ent. Method)	---	---	1.046	---
Reid VP at 37.8 C (psig)	3.045	1094	-6.940	3.294
True VP at 37.8 C (psig)	28.44	1543	26.48	29.00
Liq. Vol. Flow - Sum(Std. Cond) (barrel/day)	18.32	0.0000	18.32	0.0000
HHV Molar Basis (Std) (Btu/SCF)	---	---	---	---
HHV Mass Basis (Std) (kJ/kg)	---	---	---	---
CO2 Loading	---	---	---	---
CO2 App ML Con (kgmole/m3)	7.881e-003	---	2.760e-003	8.153e-003
CO2 App WT Con (kgmol/kg)	9.696e-006	---	2.808e-006	1.014e-005

* Specified by user.

Material Stream: 13 (continued)

Fluid Package: Basis-1
Property Package: Peng-Robinson

PROPERTIES

	Overall	Vapour Phase	Liquid Phase	Liquid Phase
Phase Fraction [Act. Vol. Basis]	0.0000	0.0000	5.040e-002	0.9496
Mass Exergy (kJ/kg)	0.4382	---	---	---
Viscosity Index	13.99	---	---	---
Ideal Gas Cp/Cv	1.033	1.185	1.008	1.034
Ideal Gas Cp (kJ/kgmole-C)	262.9	53.38	1035	250.7
Mass Ideal Gas Cp (kJ/kg-C)	1.526	1.765	1.526	1.526
Bubble Point Pressure (psig)	19.53	---	---	---

COMPOSITION

Overall Phase

Vapour Fraction 0.0000

COMPONENTS	MOLAR FLOW (kgmole/h)	MOLE FRACTION	MASS FLOW (tonne/d)	MASS FRACTION	LIQUID VOLUME FLOW (m3/h)	LIQUID VOLUME FRACTION
Methane	0.0661	0.0058	0.0254	0.0005	0.0035	0.0015
Ethane	0.1329	0.0117	0.0959	0.0020	0.0112	0.0046
Propane	0.4514	0.0396	0.4777	0.0101	0.0393	0.0162
i-Butane	0.1927	0.0169	0.2688	0.0057	0.0199	0.0082
n-Butane	0.5366	0.0471	0.7485	0.0159	0.0535	0.0220
i-Pentane	0.2509	0.0220	0.4345	0.0092	0.0290	0.0119
n-Pentane	0.3412	0.0299	0.5908	0.0125	0.0391	0.0161
n-Hexane	0.8741	0.0767	1.8079	0.0383	0.1137	0.0468
Nitrogen	0.0003	0.0000	0.0002	0.0000	0.0000	0.0000
CO2	0.0190	0.0017	0.0201	0.0004	0.0010	0.0004
H2S	0.0000	0.0000	0.0000	0.0000	0.0000	0.0000
H2O	0.0007	0.0001	0.0003	0.0000	0.0000	0.0000
NBP[1]95*	0.1003	0.0088	0.1636	0.0035	0.0100	0.0041
NBP[1]121*	0.1528	0.0134	0.2671	0.0057	0.0162	0.0066
NBP[1]147*	0.2401	0.0211	0.4622	0.0098	0.0275	0.0113
NBP[1]171*	0.5322	0.0467	1.1198	0.0238	0.0655	0.0270
NBP[1]195*	0.7805	0.0685	1.7528	0.0372	0.1014	0.0417
NBP[1]222*	0.6415	0.0563	1.5494	0.0329	0.0886	0.0364
NBP[1]248*	0.5709	0.0501	1.4826	0.0314	0.0837	0.0345
NBP[1]273*	0.4822	0.0423	1.3391	0.0284	0.0748	0.0308
NBP[1]299*	0.3896	0.0342	1.1537	0.0245	0.0637	0.0262
NBP[1]325*	0.2889	0.0253	0.9087	0.0193	0.0497	0.0204
NBP[1]351*	0.2382	0.0209	0.7965	0.0169	0.0431	0.0177
NBP[1]377*	0.2204	0.0193	0.7859	0.0167	0.0421	0.0173
NBP[1]402*	0.2036	0.0179	0.7743	0.0164	0.0411	0.0169
NBP[1]428*	0.1946	0.0171	0.7895	0.0167	0.0415	0.0171
NBP[1]454*	0.1947	0.0171	0.8441	0.0179	0.0439	0.0181
NBP[1]480*	0.1976	0.0173	0.9156	0.0194	0.0471	0.0194
NBP[1]505*	0.1917	0.0168	0.9468	0.0201	0.0483	0.0199
NBP[1]531*	0.1851	0.0162	0.9731	0.0206	0.0492	0.0202
NBP[1]557*	0.1783	0.0156	0.9973	0.0212	0.0500	0.0206
NBP[1]582*	0.1705	0.0150	1.0129	0.0215	0.0503	0.0207
NBP[1]608*	0.1643	0.0144	1.0349	0.0220	0.0510	0.0210
NBP[1]634*	0.1611	0.0141	1.0752	0.0228	0.0526	0.0216
NBP[1]659*	0.1586	0.0139	1.1194	0.0237	0.0543	0.0223
NBP[1]685*	0.1641	0.0144	1.2227	0.0259	0.0588	0.0242
NBP[1]711*	0.1715	0.0150	1.3445	0.0285	0.0642	0.0264
NBP[1]736*	0.1697	0.0149	1.3915	0.0295	0.0659	0.0271
NBP[1]762*	0.1653	0.0145	1.4214	0.0301	0.0669	0.0275
NBP[1]788*	0.1585	0.0139	1.4424	0.0306	0.0674	0.0277
NBP[1]825*	0.2655	0.0233	2.5963	0.0551	0.1201	0.0494
NBP[1]873*	0.1830	0.0160	1.9404	0.0412	0.0887	0.0365
NBP[1]926*	0.1437	0.0126	1.6472	0.0349	0.0744	0.0306
NBP[1]978*	0.1474	0.0129	1.8524	0.0393	0.0825	0.0339

* Specified by user.

Material Stream: 13 (continued)

Fluid Package: Basis-1
Property Package: Peng-Robinson

COMPOSITION

Overall Phase (continued)

Vapour Fraction 0.0000

COMPONENTS	MOLAR FLOW (kgmole/h)	MOLE FRACTION	MASS FLOW (tonne/d)	MASS FRACTION	LIQUID VOLUME FLOW (m3/h)	LIQUID VOLUME FRACTION
NBP[1]1021*	0.0728	0.0064	0.9655	0.0205	0.0426	0.0175
NBP[1]1075*	0.0449	0.0039	0.6310	0.0134	0.0276	0.0114
NBP[1]1123*	0.0417	0.0037	0.6267	0.0133	0.0271	0.0112
NBP[1]1173*	0.0300	0.0026	0.4772	0.0101	0.0205	0.0084
NBP[1]1250*	0.0393	0.0034	0.6767	0.0144	0.0287	0.0118
NBP[1]1339*	0.0364	0.0032	0.6999	0.0148	0.0291	0.0120
NBP[1]1432*	0.0257	0.0023	0.5397	0.0114	0.0221	0.0091
NBP[1]1528*	0.0180	0.0016	0.4082	0.0087	0.0165	0.0068
NBP[1]1637*	0.0127	0.0011	0.3047	0.0065	0.0122	0.0050
NBP[1]1732*	0.0088	0.0008	0.2221	0.0047	0.0088	0.0036
NBP[1]1819*	0.0000	0.0000	0.0000	0.0000	0.0000	0.0000
NBP[1]1913*	0.0000	0.0000	0.0000	0.0000	0.0000	0.0000
Total	11.4023	1.0000	47.1452	1.0000	2.4300	1.0000

Vapour Phase

Phase Fraction 0.0000

COMPONENTS	MOLAR FLOW (kgmole/h)	MOLE FRACTION	MASS FLOW (tonne/d)	MASS FRACTION	LIQUID VOLUME FLOW (m3/h)	LIQUID VOLUME FRACTION
Methane	0.0000	0.4903	0.0000	0.2602	0.0000	0.3721
Ethane	0.0000	0.1763	0.0000	0.1754	0.0000	0.2111
Propane	0.0000	0.1616	0.0000	0.2357	0.0000	0.1992
i-Butane	0.0000	0.0260	0.0000	0.0499	0.0000	0.0380
n-Butane	0.0000	0.0515	0.0000	0.0989	0.0000	0.0726
i-Pentane	0.0000	0.0091	0.0000	0.0217	0.0000	0.0149
n-Pentane	0.0000	0.0092	0.0000	0.0219	0.0000	0.0149
n-Hexane	0.0000	0.0068	0.0000	0.0195	0.0000	0.0126
Nitrogen	0.0000	0.0069	0.0000	0.0064	0.0000	0.0034
CO2	0.0000	0.0445	0.0000	0.0648	0.0000	0.0336
H2S	0.0000	0.0000	0.0000	0.0000	0.0000	0.0000
H2O	0.0000	0.0017	0.0000	0.0010	0.0000	0.0004
NBP[1]95*	0.0000	0.0029	0.0000	0.0064	0.0000	0.0041
NBP[1]121*	0.0000	0.0026	0.0000	0.0063	0.0000	0.0039
NBP[1]147*	0.0000	0.0024	0.0000	0.0064	0.0000	0.0039
NBP[1]171*	0.0000	0.0032	0.0000	0.0092	0.0000	0.0056
NBP[1]195*	0.0000	0.0028	0.0000	0.0085	0.0000	0.0051
NBP[1]222*	0.0000	0.0012	0.0000	0.0040	0.0000	0.0023
NBP[1]248*	0.0000	0.0006	0.0000	0.0020	0.0000	0.0012
NBP[1]273*	0.0000	0.0003	0.0000	0.0010	0.0000	0.0006
NBP[1]299*	0.0000	0.0001	0.0000	0.0004	0.0000	0.0002
NBP[1]325*	0.0000	0.0000	0.0000	0.0002	0.0000	0.0001
NBP[1]351*	0.0000	0.0000	0.0000	0.0001	0.0000	0.0000
NBP[1]377*	0.0000	0.0000	0.0000	0.0000	0.0000	0.0000
NBP[1]402*	0.0000	0.0000	0.0000	0.0000	0.0000	0.0000
NBP[1]428*	0.0000	0.0000	0.0000	0.0000	0.0000	0.0000
NBP[1]454*	0.0000	0.0000	0.0000	0.0000	0.0000	0.0000
NBP[1]480*	0.0000	0.0000	0.0000	0.0000	0.0000	0.0000
NBP[1]505*	0.0000	0.0000	0.0000	0.0000	0.0000	0.0000
NBP[1]531*	0.0000	0.0000	0.0000	0.0000	0.0000	0.0000
NBP[1]557*	0.0000	0.0000	0.0000	0.0000	0.0000	0.0000
NBP[1]582*	0.0000	0.0000	0.0000	0.0000	0.0000	0.0000
NBP[1]608*	0.0000	0.0000	0.0000	0.0000	0.0000	0.0000
NBP[1]634*	0.0000	0.0000	0.0000	0.0000	0.0000	0.0000
NBP[1]659*	0.0000	0.0000	0.0000	0.0000	0.0000	0.0000
NBP[1]685*	0.0000	0.0000	0.0000	0.0000	0.0000	0.0000
NBP[1]711*	0.0000	0.0000	0.0000	0.0000	0.0000	0.0000

* Specified by user.

Material Stream: 13 (continued)

Fluid Package: Basis-1
Property Package: Peng-Robinson

COMPOSITION

Vapour Phase (continued)

Phase Fraction 0.0000

COMPONENTS	MOLAR FLOW (kgmole/h)	MOLE FRACTION	MASS FLOW (tonne/d)	MASS FRACTION	LIQUID VOLUME FLOW (m3/h)	LIQUID VOLUME FRACTION
NBP[1]736*	0.0000	0.0000	0.0000	0.0000	0.0000	0.0000
NBP[1]762*	0.0000	0.0000	0.0000	0.0000	0.0000	0.0000
NBP[1]788*	0.0000	0.0000	0.0000	0.0000	0.0000	0.0000
NBP[1]825*	0.0000	0.0000	0.0000	0.0000	0.0000	0.0000
NBP[1]873*	0.0000	0.0000	0.0000	0.0000	0.0000	0.0000
NBP[1]926*	0.0000	0.0000	0.0000	0.0000	0.0000	0.0000
NBP[1]978*	0.0000	0.0000	0.0000	0.0000	0.0000	0.0000
NBP[1]1021*	0.0000	0.0000	0.0000	0.0000	0.0000	0.0000
NBP[1]1075*	0.0000	0.0000	0.0000	0.0000	0.0000	0.0000
NBP[1]1123*	0.0000	0.0000	0.0000	0.0000	0.0000	0.0000
NBP[1]1173*	0.0000	0.0000	0.0000	0.0000	0.0000	0.0000
NBP[1]1250*	0.0000	0.0000	0.0000	0.0000	0.0000	0.0000
NBP[1]1339*	0.0000	0.0000	0.0000	0.0000	0.0000	0.0000
NBP[1]1432*	0.0000	0.0000	0.0000	0.0000	0.0000	0.0000
NBP[1]1528*	0.0000	0.0000	0.0000	0.0000	0.0000	0.0000
NBP[1]1637*	0.0000	0.0000	0.0000	0.0000	0.0000	0.0000
NBP[1]1732*	0.0000	0.0000	0.0000	0.0000	0.0000	0.0000
NBP[1]1819*	0.0000	0.0000	0.0000	0.0000	0.0000	0.0000
NBP[1]1913*	0.0000	0.0000	0.0000	0.0000	0.0000	0.0000
Total	0.0000	1.0000	0.0000	1.0000	0.0000	1.0000

Liquid Phase

Phase Fraction 1.548e-002

COMPONENTS	MOLAR FLOW (kgmole/h)	MOLE FRACTION	MASS FLOW (tonne/d)	MASS FRACTION	LIQUID VOLUME FLOW (m3/h)	LIQUID VOLUME FRACTION
Methane	0.0012	0.0066	0.0004	0.0002	0.0001	0.0005
Ethane	0.0015	0.0083	0.0011	0.0004	0.0001	0.0010
Propane	0.0038	0.0215	0.0040	0.0014	0.0003	0.0027
i-Butane	0.0014	0.0080	0.0020	0.0007	0.0001	0.0012
n-Butane	0.0035	0.0198	0.0049	0.0017	0.0003	0.0029
i-Pentane	0.0014	0.0082	0.0025	0.0009	0.0002	0.0014
n-Pentane	0.0018	0.0102	0.0031	0.0011	0.0002	0.0017
n-Hexane	0.0039	0.0219	0.0080	0.0028	0.0005	0.0042
Nitrogen	0.0000	0.0001	0.0000	0.0000	0.0000	0.0000
CO2	0.0003	0.0019	0.0004	0.0001	0.0000	0.0001
H2S	0.0000	0.0000	0.0000	0.0000	0.0000	0.0000
H2O	0.0000	0.0001	0.0000	0.0000	0.0000	0.0000
NBP[1]95*	0.0005	0.0030	0.0008	0.0003	0.0001	0.0004
NBP[1]121*	0.0007	0.0041	0.0013	0.0004	0.0001	0.0006
NBP[1]147*	0.0010	0.0058	0.0020	0.0007	0.0001	0.0010
NBP[1]171*	0.0021	0.0117	0.0043	0.0015	0.0003	0.0021
NBP[1]195*	0.0028	0.0158	0.0063	0.0022	0.0004	0.0030
NBP[1]222*	0.0021	0.0120	0.0051	0.0018	0.0003	0.0024
NBP[1]248*	0.0017	0.0099	0.0045	0.0016	0.0003	0.0021
NBP[1]273*	0.0014	0.0078	0.0038	0.0013	0.0002	0.0018
NBP[1]299*	0.0010	0.0059	0.0031	0.0011	0.0002	0.0014
NBP[1]325*	0.0007	0.0041	0.0023	0.0008	0.0001	0.0010
NBP[1]351*	0.0006	0.0031	0.0018	0.0006	0.0001	0.0008
NBP[1]377*	0.0005	0.0027	0.0017	0.0006	0.0001	0.0008
NBP[1]402*	0.0004	0.0023	0.0016	0.0005	0.0001	0.0007
NBP[1]428*	0.0004	0.0021	0.0015	0.0005	0.0001	0.0007
NBP[1]454*	0.0003	0.0019	0.0015	0.0005	0.0001	0.0006
NBP[1]480*	0.0003	0.0019	0.0015	0.0005	0.0001	0.0007
NBP[1]505*	0.0003	0.0017	0.0015	0.0005	0.0001	0.0006
NBP[1]531*	0.0003	0.0016	0.0014	0.0005	0.0001	0.0006

* Specified by user.

Material Stream: 13 (continued)

Fluid Package: Basis-1
Property Package: Peng-Robinson

COMPOSITION

Liquid Phase (continued)

Phase Fraction 1.548e-002

COMPONENTS	MOLAR FLOW (kgmole/h)	MOLE FRACTION	MASS FLOW (tonne/d)	MASS FRACTION	LIQUID VOLUME FLOW (m3/h)	LIQUID VOLUME FRACTION
NBP[1]557*	0.0003	0.0014	0.0014	0.0005	0.0001	0.0006
NBP[1]582*	0.0002	0.0013	0.0014	0.0005	0.0001	0.0006
NBP[1]608*	0.0002	0.0012	0.0013	0.0005	0.0001	0.0006
NBP[1]634*	0.0002	0.0011	0.0013	0.0005	0.0001	0.0005
NBP[1]659*	0.0002	0.0011	0.0014	0.0005	0.0001	0.0006
NBP[1]685*	0.0002	0.0011	0.0015	0.0005	0.0001	0.0006
NBP[1]711*	0.0002	0.0011	0.0016	0.0006	0.0001	0.0006
NBP[1]736*	0.0002	0.0012	0.0017	0.0006	0.0001	0.0007
NBP[1]762*	0.0002	0.0012	0.0018	0.0006	0.0001	0.0007
NBP[1]788*	0.0002	0.0012	0.0019	0.0006	0.0001	0.0007
NBP[1]825*	0.0004	0.0022	0.0037	0.0013	0.0002	0.0014
NBP[1]873*	0.0003	0.0019	0.0035	0.0012	0.0002	0.0013
NBP[1]926*	0.0004	0.0022	0.0044	0.0015	0.0002	0.0016
NBP[1]978*	0.0006	0.0033	0.0072	0.0025	0.0003	0.0027
NBP[1]1021*	0.0005	0.0028	0.0066	0.0023	0.0003	0.0024
NBP[1]1075*	0.0008	0.0044	0.0109	0.0038	0.0005	0.0040
NBP[1]1123*	0.0018	0.0101	0.0266	0.0093	0.0012	0.0096
NBP[1]1173*	0.0043	0.0245	0.0689	0.0240	0.0030	0.0246
NBP[1]1250*	0.0282	0.1597	0.4852	0.1689	0.0206	0.1714
NBP[1]1339*	0.0361	0.2043	0.6937	0.2414	0.0289	0.2407
NBP[1]1432*	0.0257	0.1454	0.5397	0.1879	0.0221	0.1844
NBP[1]1528*	0.0180	0.1021	0.4082	0.1421	0.0165	0.1377
NBP[1]1637*	0.0127	0.0717	0.3047	0.1060	0.0122	0.1015
NBP[1]1732*	0.0088	0.0497	0.2221	0.0773	0.0088	0.0732
NBP[1]1819*	0.0000	0.0000	0.0000	0.0000	0.0000	0.0000
NBP[1]1913*	0.0000	0.0000	0.0000	0.0000	0.0000	0.0000
Total	0.1765	1.0000	2.8731	1.0000	0.1200	1.0000

Phase Fraction

COMPONENTS	MOLAR FLOW	MOLE FRACTION	MASS FLOW	MASS FRACTION	LIQUID VOLUME FLOW	LIQUID VOLUME FRACTION

Licensed to: PETROCHEMICAL ENGINEERIN
* Specified by user.

Material Stream: 13 (continued)

Fluid Package: Basis-1
Property Package: Peng-Robinson

COMPOSITION

COMPONENTS	MOLAR FLOW	MOLE FRACTION	MASS FLOW	MASS FRACTION	LIQUID VOLUME FLOW	LIQUID VOLUME FRACTION (Phase Fraction)
Total		1.0000		1.0000		1.0000

Material Stream: FLASH-GAS

Fluid Package: Basis-1
Property Package: Peng-Robinson

CONDITIONS

		Overall
Vapour / Phase Fraction		---
Temperature:	(F)	---
Pressure:	(psig)	450.0
Molar Flow	(MMSCFD)	0.1359
Mass Flow	(tonne/d)	6.156 *
Std Ideal Liq Vol Flow	(barrel/day)	80.89
Molar Enthalpy	(kJ/kgmole)	---
Molar Entropy	(kJ/kgmole-C)	---
Heat Flow	(MMBtu/hr)	---
Liq Vol Flow @Std Cond	(barrel/day)	87.30 *

PROPERTIES

	Overall
Molecular Weight	37.88

* Specified by user.

Material Stream: FLASH-GAS (continued)

Fluid Package: Basis-1
Property Package: Peng-Robinson

PROPERTIES

		Overall				
Molar Density	(kgmole/m3)	---				
Mass Density	(kg/m3)	---				
Act. Volume Flow	(barrel/day)	---				
Mass Enthalpy	(kJ/kg)	---				
Mass Entropy	(kJ/kg-C)	---				
Heat Capacity	(kJ/kgmole-C)	---				
Mass Heat Capacity	(kJ/kg-C)	---				
LHV Molar Basis (Std)	(Btu/SCF)	---				
LHV Mass Basis (Std)	(kJ/kg)	---				
Phase Fraction [Vol. Basis]		0.0000				
Phase Fraction [Mass Basis]		0.0000				
Partial Pressure of CO2	(psig)	-14.70				
Cost Based on Flow	(Cost/s)	0.0000				
Act. Gas Flow	(ACT_m3/h)	---				
Avg. Liq. Density	(kgmole/m3)	12.64				
Specific Heat	(kJ/kgmole-C)	---				
Std. Gas Flow	(STD_m3/h)	160.1				
Std. Ideal Liq. Mass Density	(kg/m3)	478.7				
Act. Liq. Flow	(barrel/day)	---				
Z Factor		---				
Watson K		14.89				
User Property		---				
Partial Pressure of H2S	(psig)	-14.70				
Cp/(Cp - R)		---				
Cp/Cv		---				
Heat of Vap.	(kJ/kgmole)	---				
Kinematic Viscosity	(cSt)	---				
Liq. Mass Density (Std. Cond)	(kg/m3)	443.5				
Liq. Vol. Flow (Std. Cond)	(barrel/day)	87.30				
Liquid Fraction		---				
Molar Volume	(m3/kgmole)	---				
Mass Heat of Vap.	(kJ/kg)	---				
Phase Fraction [Molar Basis]		---				
Surface Tension	(dyne/cm)	---				
Thermal Conductivity	(W/m-K)	---				
Viscosity	(cP)	---				
Cv (Semi-Ideal)	(kJ/kgmole-C)	---				
Mass Cv (Semi-Ideal)	(kJ/kg-C)	---				
Cv	(kJ/kgmole-C)	---				
Mass Cv	(kJ/kg-C)	---				
Cv (Ent. Method)	(kJ/kgmole-C)	---				
Mass Cv (Ent. Method)	(kJ/kg-C)	---				
Cp/Cv (Ent. Method)		---				
Reid VP at 37.8 C	(psig)	---				
True VP at 37.8 C	(psig)	---				
Liq. Vol. Flow - Sum(Std. Cond)	(barrel/day)	0.0000				
HHV Molar Basis (Std)	(Btu/SCF)	---				
HHV Mass Basis (Std)	(kJ/kg)	---				
CO2 Loading		---				
CO2 App ML Con	(kgmole/m3)	---				
CO2 App WT Con	(kgmol/kg)	1.012e-003				
Phase Fraction [Act. Vol. Basis]		0.0000				
Mass Exergy	(kJ/kg)	9.741e+006				
Viscosity Index		---				
Ideal Gas Cp/Cv		1.000				
Ideal Gas Cp	(kJ/kgmole-C)	6.915e+007				
Mass Ideal Gas Cp	(kJ/kg-C)	1.825e+006				

* Specified by user.

Material Stream: FLASH-GAS (continued)

Fluid Package: Basis-1
Property Package: Peng-Robinson

PROPERTIES

	Overall
Bubble Point Pressure (psig)	---

COMPOSITION

Overall Phase

Vapour Fraction ---

COMPONENTS	MOLAR FLOW (kgmole/h)	MOLE FRACTION	MASS FLOW (tonne/d)	MASS FRACTION	LIQUID VOLUME FLOW (m3/h)	LIQUID VOLUME FRACTION
Methane	2.2576 *	0.3334 *	0.8692 *	0.1412 *	0.1210 *	0.2258 *
Ethane	1.1838 *	0.1748 *	0.8543 *	0.1388 *	0.1001 *	0.1868 *
Propane	1.4351 *	0.2120 *	1.5188 *	0.2467 *	0.1249 *	0.2331 *
i-Butane	0.2831 *	0.0418 *	0.3950 *	0.0642 *	0.0293 *	0.0547 *
n-Butane	0.5947 *	0.0878 *	0.8295 *	0.1348 *	0.0593 *	0.1106 *
i-Pentane	0.1287 *	0.0190 *	0.2228 *	0.0362 *	0.0149 *	0.0278 *
n-Pentane	0.1372 *	0.0203 *	0.2376 *	0.0386 *	0.0157 *	0.0293 *
n-Hexane	0.1223 *	0.0181 *	0.2530 *	0.0411 *	0.0159 *	0.0297 *
Nitrogen	0.0260 *	0.0038 *	0.0175 *	0.0028 *	0.0009 *	0.0017 *
CO2	0.2597 *	0.0384 *	0.2743 *	0.0446 *	0.0138 *	0.0258 *
H2S	0.0000 *	0.0000 *	0.0000 *	0.0000 *	0.0000 *	0.0000 *
H2O	0.0116 *	0.0017 *	0.0050 *	0.0008 *	0.0002 *	0.0004 *
NBP[1]95*	0.0492 *	0.0073 *	0.0802 *	0.0130 *	0.0049 *	0.0092 *
NBP[1]121*	0.0494 *	0.0073 *	0.0863 *	0.0140 *	0.0052 *	0.0097 *
NBP[1]147*	0.0493 *	0.0073 *	0.0948 *	0.0154 *	0.0056 *	0.0105 *
NBP[1]171*	0.0691 *	0.0102 *	0.1455 *	0.0236 *	0.0085 *	0.0159 *
NBP[1]195*	0.0624 *	0.0092 *	0.1401 *	0.0228 *	0.0081 *	0.0151 *
NBP[1]222*	0.0278 *	0.0041 *	0.0672 *	0.0109 *	0.0038 *	0.0072 *
NBP[1]248*	0.0135 *	0.0020 *	0.0350 *	0.0057 *	0.0020 *	0.0037 *
NBP[1]273*	0.0061 *	0.0009 *	0.0169 *	0.0027 *	0.0009 *	0.0018 *
NBP[1]299*	0.0026 *	0.0004 *	0.0076 *	0.0012 *	0.0004 *	0.0008 *
NBP[1]325*	0.0010 *	0.0001 *	0.0030 *	0.0005 *	0.0002 *	0.0003 *
NBP[1]351*	0.0004 *	0.0001 *	0.0013 *	0.0002 *	0.0001 *	0.0001 *
NBP[1]377*	0.0002 *	0.0000 *	0.0006 *	0.0001 *	0.0000 *	0.0001 *
NBP[1]402*	0.0001 *	0.0000 *	0.0003 *	0.0000 *	0.0000 *	0.0000 *
NBP[1]428*	0.0000 *	0.0000 *	0.0001 *	0.0000 *	0.0000 *	0.0000 *
NBP[1]454*	0.0000 *	0.0000 *	0.0001 *	0.0000 *	0.0000 *	0.0000 *
NBP[1]480*	0.0000 *	0.0000 *	0.0000 *	0.0000 *	0.0000 *	0.0000 *
NBP[1]505*	0.0000 *	0.0000 *	0.0000 *	0.0000 *	0.0000 *	0.0000 *
NBP[1]531*	0.0000 *	0.0000 *	0.0000 *	0.0000 *	0.0000 *	0.0000 *
NBP[1]557*	0.0000 *	0.0000 *	0.0000 *	0.0000 *	0.0000 *	0.0000 *
NBP[1]582*	0.0000 *	0.0000 *	0.0000 *	0.0000 *	0.0000 *	0.0000 *
NBP[1]608*	0.0000 *	0.0000 *	0.0000 *	0.0000 *	0.0000 *	0.0000 *
NBP[1]634*	0.0000 *	0.0000 *	0.0000 *	0.0000 *	0.0000 *	0.0000 *
NBP[1]659*	0.0000 *	0.0000 *	0.0000 *	0.0000 *	0.0000 *	0.0000 *
NBP[1]685*	0.0000 *	0.0000 *	0.0000 *	0.0000 *	0.0000 *	0.0000 *
NBP[1]711*	0.0000 *	0.0000 *	0.0000 *	0.0000 *	0.0000 *	0.0000 *
NBP[1]736*	0.0000 *	0.0000 *	0.0000 *	0.0000 *	0.0000 *	0.0000 *
NBP[1]762*	0.0000 *	0.0000 *	0.0000 *	0.0000 *	0.0000 *	0.0000 *
NBP[1]788*	0.0000 *	0.0000 *	0.0000 *	0.0000 *	0.0000 *	0.0000 *
NBP[1]825*	0.0000 *	0.0000 *	0.0000 *	0.0000 *	0.0000 *	0.0000 *
NBP[1]873*	0.0000 *	0.0000 *	0.0000 *	0.0000 *	0.0000 *	0.0000 *
NBP[1]926*	0.0000 *	0.0000 *	0.0000 *	0.0000 *	0.0000 *	0.0000 *
NBP[1]978*	0.0000 *	0.0000 *	0.0000 *	0.0000 *	0.0000 *	0.0000 *
NBP[1]1021*	0.0000 *	0.0000 *	0.0000 *	0.0000 *	0.0000 *	0.0000 *
NBP[1]1075*	0.0000 *	0.0000 *	0.0000 *	0.0000 *	0.0000 *	0.0000 *
NBP[1]1123*	0.0000 *	0.0000 *	0.0000 *	0.0000 *	0.0000 *	0.0000 *
NBP[1]1173*	0.0000 *	0.0000 *	0.0000 *	0.0000 *	0.0000 *	0.0000 *
NBP[1]1250*	0.0000 *	0.0000 *	0.0000 *	0.0000 *	0.0000 *	0.0000 *
NBP[1]1339*	0.0000 *	0.0000 *	0.0000 *	0.0000 *	0.0000 *	0.0000 *

Licensed to: PETROCHEMICAL ENGINEERIN
* Specified by user.

Material Stream: FLASH-GAS (continued)

Fluid Package: Basis-1
Property Package: Peng-Robinson

COMPOSITION

Overall Phase (continued)

Vapour Fraction ---

COMPONENTS	MOLAR FLOW (kgmole/h)	MOLE FRACTION	MASS FLOW (tonne/d)	MASS FRACTION	LIQUID VOLUME FLOW (m3/h)	LIQUID VOLUME FRACTION
NBP[1]1432*	0.0000 *	0.0000 *	0.0000 *	0.0000 *	0.0000 *	0.0000 *
NBP[1]1528*	0.0000 *	0.0000 *	0.0000 *	0.0000 *	0.0000 *	0.0000 *
NBP[1]1637*	0.0000 *	0.0000 *	0.0000 *	0.0000 *	0.0000 *	0.0000 *
NBP[1]1732*	0.0000 *	0.0000 *	0.0000 *	0.0000 *	0.0000 *	0.0000 *
NBP[1]1819*	0.0000 *	0.0000 *	0.0000 *	0.0000 *	0.0000 *	0.0000 *
NBP[1]1913*	0.0000 *	0.0000 *	0.0000 *	0.0000 *	0.0000 *	0.0000 *
Total	6.7707	1.0000	6.1561	1.0000	0.5358	1.0000

Material Stream: Gas-PRD

Fluid Package: Basis-1
Property Package: Peng-Robinson

CONDITIONS

		Overall
Vapour / Phase Fraction		---
Temperature:	(F)	---
Pressure:	(psig)	450.0 *
Molar Flow	(MMSCFD)	5.400 *
Mass Flow	(tonne/d)	139.4
Std Ideal Liq Vol Flow	(barrel/day)	2425
Molar Enthalpy	(kJ/kgmole)	---
Molar Entropy	(kJ/kgmole-C)	---
Heat Flow	(MMBtu/hr)	---
Liq Vol Flow @Std Cond	(barrel/day)	9.561e+005 *

PROPERTIES

		Overall
Molecular Weight		21.60
Molar Density	(kgmole/m3)	---
Mass Density	(kg/m3)	---
Act. Volume Flow	(barrel/day)	---
Mass Enthalpy	(kJ/kg)	---
Mass Entropy	(kJ/kg-C)	---
Heat Capacity	(kJ/kgmole-C)	---
Mass Heat Capacity	(kJ/kg-C)	---
LHV Molar Basis (Std)	(Btu/SCF)	1078
LHV Mass Basis (Std)	(kJ/kg)	4.406e+004
Phase Fraction [Vol. Basis]		0.0000
Phase Fraction [Mass Basis]		0.0000
Partial Pressure of CO2	(psig)	-14.70
Cost Based on Flow	(Cost/s)	0.0000
Act. Gas Flow	(ACT_m3/h)	---
Avg. Liq. Density	(kgmole/m3)	16.75
Specific Heat	(kJ/kgmole-C)	---
Std. Gas Flow	(STD_m3/h)	6359
Std. Ideal Liq. Mass Density	(kg/m3)	361.7
Act. Liq. Flow	(barrel/day)	---
Z Factor		---
Watson K		17.22
User Property		---
Partial Pressure of H2S	(psig)	-14.70
Cp/(Cp - R)		---
Cp/Cv		---
Heat of Vap.	(kJ/kgmole)	---
Kinematic Viscosity	(cSt)	---

* Specified by user.

Material Stream: Gas-PRD (continued)

Fluid Package: Basis-1
Property Package: Peng-Robinson

PROPERTIES

	Overall				
Liq. Mass Density (Std. Cond) (kg/m3)	0.9172				
Liq. Vol. Flow (Std. Cond) (barrel/day)	9.561e+005				
Liquid Fraction	---				
Molar Volume (m3/kgmole)	---				
Mass Heat of Vap. (kJ/kg)	---				
Phase Fraction [Molar Basis]	---				
Surface Tension (dyne/cm)	---				
Thermal Conductivity (W/m-K)	---				
Viscosity (cP)	---				
Cv (Semi-Ideal) (kJ/kgmole-C)	---				
Mass Cv (Semi-Ideal) (kJ/kg-C)	---				
Cv (kJ/kgmole-C)	---				
Mass Cv (kJ/kg-C)	---				
Cv (Ent. Method) (kJ/kgmole-C)	---				
Mass Cv (Ent. Method) (kJ/kg-C)	---				
Cp/Cv (Ent. Method)	---				
Reid VP at 37.8 C (psig)	---				
True VP at 37.8 C (psig)	---				
Liq. Vol. Flow - Sum(Std. Cond) (barrel/day)	0.0000				
HHV Molar Basis (Std) (Btu/SCF)	1181				
HHV Mass Basis (Std) (kJ/kg)	4.824e+004				
CO2 Loading	---				
CO2 App ML Con (kgmole/m3)	---				
CO2 App WT Con (kgmol/kg)	1.576e-003				
Phase Fraction [Act. Vol. Basis]	0.0000				
Mass Exergy (kJ/kg)	9.743e+006				
Viscosity Index	---				
Ideal Gas Cp/Cv	1.000				
Ideal Gas Cp (kJ/kgmole-C)	8.446e+007				
Mass Ideal Gas Cp (kJ/kg-C)	3.911e+006				
Bubble Point Pressure (psig)	---				

COMPOSITION

Overall Phase

Vapour Fraction ---

COMPONENTS	MOLAR FLOW (kgmole/h)	MOLE FRACTION	MASS FLOW (tonne/d)	MASS FRACTION	LIQUID VOLUME FLOW (m3/h)	LIQUID VOLUME FRACTION
Methane	204.7864 *	0.7614 *	78.8488 *	0.5656 *	10.9734 *	0.6832 *
Ethane	27.6169 *	0.1027 *	19.9305 *	0.1430 *	2.3348 *	0.1454 *
Propane	13.8326 *	0.0514 *	14.6395 *	0.1050 *	1.2039 *	0.0750 *
i-Butane	1.7456 *	0.0065 *	2.4350 *	0.0175 *	0.1805 *	0.0112 *
n-Butane	3.3566 *	0.0125 *	4.6824 *	0.0336 *	0.3345 *	0.0208 *
i-Pentane	0.7208 *	0.0027 *	1.2482 *	0.0090 *	0.0834 *	0.0052 *
n-Pentane	0.8230 *	0.0031 *	1.4252 *	0.0102 *	0.0943 *	0.0059 *
n-Hexane	1.3475 *	0.0050 *	2.7870 *	0.0200 *	0.1752 *	0.0109 *
Nitrogen	5.5729 *	0.0207 *	3.7467 *	0.0269 *	0.1936 *	0.0121 *
CO2	9.1554 *	0.0340 *	9.6702 *	0.0694 *	0.4882 *	0.0304 *
H2S	0.0005 *	0.0000 *	0.0004 *	0.0000 *	0.0000 *	0.0000 *
H2O	0.0000 *	0.0000 *	0.0000 *	0.0000 *	0.0000 *	0.0000 *
NBP[1]95*	0.0000 *	0.0000 *	0.0000 *	0.0000 *	0.0000 *	0.0000 *
NBP[1]121*	0.0000 *	0.0000 *	0.0000 *	0.0000 *	0.0000 *	0.0000 *
NBP[1]147*	0.0000 *	0.0000 *	0.0000 *	0.0000 *	0.0000 *	0.0000 *
NBP[1]171*	0.0000 *	0.0000 *	0.0000 *	0.0000 *	0.0000 *	0.0000 *
NBP[1]195*	0.0000 *	0.0000 *	0.0000 *	0.0000 *	0.0000 *	0.0000 *
NBP[1]222*	0.0000 *	0.0000 *	0.0000 *	0.0000 *	0.0000 *	0.0000 *
NBP[1]248*	0.0000 *	0.0000 *	0.0000 *	0.0000 *	0.0000 *	0.0000 *
NBP[1]273*	0.0000 *	0.0000 *	0.0000 *	0.0000 *	0.0000 *	0.0000 *

Licensed to: PETROCHEMICAL ENGINEERIN
* Specified by user.

Material Stream: Gas-PRD (continued)

Fluid Package: Basis-1
Property Package: Peng-Robinson

COMPOSITION

Overall Phase (continued)

Vapour Fraction ---

COMPONENTS	MOLAR FLOW (kgmole/h)	MOLE FRACTION	MASS FLOW (tonne/d)	MASS FRACTION	LIQUID VOLUME FLOW (m3/h)	LIQUID VOLUME FRACTION
NBP[1]299*	0.0000 *	0.0000 *	0.0000 *	0.0000 *	0.0000 *	0.0000 *
NBP[1]325*	0.0000 *	0.0000 *	0.0000 *	0.0000 *	0.0000 *	0.0000 *
NBP[1]351*	0.0000 *	0.0000 *	0.0000 *	0.0000 *	0.0000 *	0.0000 *
NBP[1]377*	0.0000 *	0.0000 *	0.0000 *	0.0000 *	0.0000 *	0.0000 *
NBP[1]402*	0.0000 *	0.0000 *	0.0000 *	0.0000 *	0.0000 *	0.0000 *
NBP[1]428*	0.0000 *	0.0000 *	0.0000 *	0.0000 *	0.0000 *	0.0000 *
NBP[1]454*	0.0000 *	0.0000 *	0.0000 *	0.0000 *	0.0000 *	0.0000 *
NBP[1]480*	0.0000 *	0.0000 *	0.0000 *	0.0000 *	0.0000 *	0.0000 *
NBP[1]505*	0.0000 *	0.0000 *	0.0000 *	0.0000 *	0.0000 *	0.0000 *
NBP[1]531*	0.0000 *	0.0000 *	0.0000 *	0.0000 *	0.0000 *	0.0000 *
NBP[1]557*	0.0000 *	0.0000 *	0.0000 *	0.0000 *	0.0000 *	0.0000 *
NBP[1]582*	0.0000 *	0.0000 *	0.0000 *	0.0000 *	0.0000 *	0.0000 *
NBP[1]608*	0.0000 *	0.0000 *	0.0000 *	0.0000 *	0.0000 *	0.0000 *
NBP[1]634*	0.0000 *	0.0000 *	0.0000 *	0.0000 *	0.0000 *	0.0000 *
NBP[1]659*	0.0000 *	0.0000 *	0.0000 *	0.0000 *	0.0000 *	0.0000 *
NBP[1]685*	0.0000 *	0.0000 *	0.0000 *	0.0000 *	0.0000 *	0.0000 *
NBP[1]711*	0.0000 *	0.0000 *	0.0000 *	0.0000 *	0.0000 *	0.0000 *
NBP[1]736*	0.0000 *	0.0000 *	0.0000 *	0.0000 *	0.0000 *	0.0000 *
NBP[1]762*	0.0000 *	0.0000 *	0.0000 *	0.0000 *	0.0000 *	0.0000 *
NBP[1]788*	0.0000 *	0.0000 *	0.0000 *	0.0000 *	0.0000 *	0.0000 *
NBP[1]825*	0.0000 *	0.0000 *	0.0000 *	0.0000 *	0.0000 *	0.0000 *
NBP[1]873*	0.0000 *	0.0000 *	0.0000 *	0.0000 *	0.0000 *	0.0000 *
NBP[1]926*	0.0000 *	0.0000 *	0.0000 *	0.0000 *	0.0000 *	0.0000 *
NBP[1]978*	0.0000 *	0.0000 *	0.0000 *	0.0000 *	0.0000 *	0.0000 *
NBP[1]1021*	0.0000 *	0.0000 *	0.0000 *	0.0000 *	0.0000 *	0.0000 *
NBP[1]1075*	0.0000 *	0.0000 *	0.0000 *	0.0000 *	0.0000 *	0.0000 *
NBP[1]1123*	0.0000 *	0.0000 *	0.0000 *	0.0000 *	0.0000 *	0.0000 *
NBP[1]1173*	0.0000 *	0.0000 *	0.0000 *	0.0000 *	0.0000 *	0.0000 *
NBP[1]1250*	0.0000 *	0.0000 *	0.0000 *	0.0000 *	0.0000 *	0.0000 *
NBP[1]1339*	0.0000 *	0.0000 *	0.0000 *	0.0000 *	0.0000 *	0.0000 *
NBP[1]1432*	0.0000 *	0.0000 *	0.0000 *	0.0000 *	0.0000 *	0.0000 *
NBP[1]1528*	0.0000 *	0.0000 *	0.0000 *	0.0000 *	0.0000 *	0.0000 *
NBP[1]1637*	0.0000 *	0.0000 *	0.0000 *	0.0000 *	0.0000 *	0.0000 *
NBP[1]1732*	0.0000 *	0.0000 *	0.0000 *	0.0000 *	0.0000 *	0.0000 *
NBP[1]1819*	0.0000 *	0.0000 *	0.0000 *	0.0000 *	0.0000 *	0.0000 *
NBP[1]1913*	0.0000 *	0.0000 *	0.0000 *	0.0000 *	0.0000 *	0.0000 *
Total	268.9582	1.0000	139.4139	1.0000	16.0619	1.0000

Material Stream: Pandhi

Fluid Package: Basis-1
Property Package: Peng-Robinson

CONDITIONS

		Overall	Vapour Phase	Liquid Phase	Aqueous Phase
Vapour / Phase Fraction		0.6833	0.6833	0.0455	0.2712
Temperature:	(F)	85.00 *	85.00	85.00	85.00
Pressure:	(psig)	450.0 *	450.0	450.0	450.0
Molar Flow	(MMSCFD)	7.874	5.380	0.3586	2.135
Mass Flow	(tonne/d)	237.5	137.5	54.03	46.00
Std Ideal Liq Vol Flow	(barrel/day)	3142	2402	450.0	290.0
Molar Enthalpy	(kJ/kgmole)	-1.516e+005	-8.928e+004	-2.868e+005	-2.859e+005
Molar Entropy	(kJ/kgmole-C)	133.6	159.2	218.5	54.86
Heat Flow	(MMBtu/hr)	-56.34	-22.68	-4.856	-28.81
Liq Vol Flow @Std Cond	(barrel/day)	2.954e+005 *	9.526e+005	434.8	285.1

* Specified by user.

Material Stream: Pandhi (continued)

Fluid Package: Basis-1
Property Package: Peng-Robinson

PROPERTIES

	Overall	Vapour Phase	Liquid Phase	Aqueous Phase
Molecular Weight	25.24	21.38	126.0	18.03
Molar Density (kgmole/m3)	2.032	1.424	6.091	55.76
Mass Density (kg/m3)	51.28	30.45	767.6	1005
Act. Volume Flow (barrel/day)	2.914e+004	2.841e+004	442.7	287.9
Mass Enthalpy (kJ/kg)	-6006	-4175	-2276	-1.586e+004
Mass Entropy (kJ/kg-C)	5.293	7.444	1.734	3.043
Heat Capacity (kJ/kgmole-C)	64.84	47.20	253.3	77.64
Mass Heat Capacity (kJ/kg-C)	2.569	2.207	2.010	4.307
LHV Molar Basis (Std) (Btu/SCF)	---	---	---	1.835e-004
LHV Mass Basis (Std) (kJ/kg)	---	---	---	8.987e-003
Phase Fraction [Vol. Basis]	0.7645	0.7645	0.1432	9.229e-002
Phase Fraction [Mass Basis]	0.5789	0.5789	0.2274	0.1937
Partial Pressure of CO2 (psig)	1.138	---	---	---
Cost Based on Flow (Cost/s)	0.0000	0.0000	0.0000	0.0000
Act. Gas Flow (ACT_m3/h)	188.2	188.2	---	---
Avg. Liq. Density (kgmole/m3)	18.84	16.84	5.992	55.35
Specific Heat (kJ/kgmole-C)	64.84	47.20	253.3	77.64
Std. Gas Flow (STD_m3/h)	9272	6336	422.3	2514
Std. Ideal Liq. Mass Density (kg/m3)	475.5	360.1	755.2	997.8
Act. Liq. Flow (barrel/day)	730.6	---	442.7	287.9
Z Factor	---	0.8944	0.2091	2.284e-002
Watson K	15.58	17.28	11.99	8.497
User Property	---	---	---	---
Partial Pressure of H2S (psig)	-14.70	---	---	---
Cp/(Cp - R)	1.147	1.214	1.034	1.120
Cp/Cv	1.164	1.389	1.034	1.149
Heat of Vap. (kJ/kgmole)	6.864e+004	---	---	---
Kinematic Viscosity (cSt)	---	0.3953	11.77	0.8027
Liq. Mass Density (Std. Cond) (kg/m3)	5.058	0.9080	781.4	1015
Liq. Vol. Flow (Std. Cond) (barrel/day)	2.954e+005	9.526e+005	434.8	285.1
Liquid Fraction	0.3167	0.0000	1.000	1.000
Molar Volume (m3/kgmole)	0.4922	0.7023	0.1642	1.793e-002
Mass Heat of Vap. (kJ/kg)	2720	---	---	---
Phase Fraction [Molar Basis]	0.6833	0.6833	0.0455	0.2712
Surface Tension (dyne/cm)	---	---	15.90	71.30
Thermal Conductivity (W/m-K)	---	3.307e-002	0.1005	0.6175
Viscosity (cP)	---	1.204e-002	9.037	0.8068
Cv (Semi-Ideal) (kJ/kgmole-C)	56.53	38.88	245.0	69.33
Mass Cv (Semi-Ideal) (kJ/kg-C)	2.240	1.818	1.944	3.846
Cv (kJ/kgmole-C)	55.70	33.97	245.0	67.55
Mass Cv (kJ/kg-C)	2.207	1.589	1.944	3.748
Cv (Ent. Method) (kJ/kgmole-C)	---	-3703	---	67.05
Mass Cv (Ent. Method) (kJ/kg-C)	---	-173.2	---	3.720
Cp/Cv (Ent. Method)	---	-1.275e-002	---	1.158
Reid VP at 37.8 C (psig)	3319	---	98.95	---
True VP at 37.8 C (psig)	6318	4184	480.8	17.45
Liq. Vol. Flow - Sum(Std. Cond) (barrel/day)	9.533e+005	9.526e+005	434.8	285.1
HHV Molar Basis (Std) (Btu/SCF)	---	---	---	46.45
HHV Mass Basis (Std) (kJ/kg)	---	---	---	2274
CO2 Loading	---	---	---	---
CO2 App ML Con (kgmole/m3)	---	---	8.249e-002	2.230e-002
CO2 App WT Con (kgmol/kg)	---	---	1.075e-004	2.219e-005
Phase Fraction [Act. Vol. Basis]	0.9749	0.9749	1.519e-002	9.880e-003
Mass Exergy (kJ/kg)	234.0	---	---	---
Viscosity Index	-12.15	---	---	---
Ideal Gas Cp/Cv	1.217	1.249	1.043	1.329
Ideal Gas Cp (kJ/kgmole-C)	46.72	41.73	199.6	33.60

* Specified by user.

Material Stream: Pandhi (continued)

Fluid Package: Basis-1
Property Package: Peng-Robinson

PROPERTIES

	Overall	Vapour Phase	Liquid Phase	Aqueous Phase
Mass Ideal Gas Cp (kJ/kg-C)	1.851	1.951	1.584	1.864
Bubble Point Pressure (psig)	6241	---	---	---

COMPOSITION

Overall Phase

Vapour Fraction 0.6833

COMPONENTS	MOLAR FLOW (kgmole/h)	MOLE FRACTION	MASS FLOW (tonne/d)	MASS FRACTION	LIQUID VOLUME FLOW (m3/h)	LIQUID VOLUME FRACTION
Methane	207.0440	0.5280	79.7181	0.3356	11.0944	0.5330
Ethane	28.8006	0.0734	20.7848	0.0875	2.4348	0.1170
Propane	15.2677	0.0389	16.1583	0.0680	1.3288	0.0638
i-Butane	2.0287	0.0052	2.8300	0.0119	0.2098	0.0101
n-Butane	3.9513	0.0101	5.5120	0.0232	0.3938	0.0189
i-Pentane	0.8495	0.0022	1.4710	0.0062	0.0983	0.0047
n-Pentane	0.9602	0.0024	1.6627	0.0070	0.1100	0.0053
n-Hexane	1.4698	0.0037	3.0399	0.0128	0.1911	0.0092
Nitrogen	5.5989	0.0143	3.7642	0.0158	0.1945	0.0093
CO2	9.4151	0.0240	9.9445	0.0419	0.5020	0.0241
H2S	0.0006	0.0000	0.0005	0.0000	0.0000	0.0000
H2O	106.6990	0.2721	46.1326	0.1942	1.9261	0.0925
NBP[1]95*	0.2883	0.0007	0.4699	0.0020	0.0288	0.0014
NBP[1]121*	0.3381	0.0009	0.5912	0.0025	0.0358	0.0017
NBP[1]147*	0.4314	0.0011	0.8304	0.0035	0.0494	0.0024
NBP[1]171*	0.8224	0.0021	1.7306	0.0073	0.1013	0.0049
NBP[1]195*	1.0758	0.0027	2.4160	0.0102	0.1398	0.0067
NBP[1]222*	0.8003	0.0020	1.9331	0.0081	0.1105	0.0053
NBP[1]248*	0.6657	0.0017	1.7287	0.0073	0.0976	0.0047
NBP[1]273*	0.5358	0.0014	1.4881	0.0063	0.0831	0.0040
NBP[1]299*	0.4185	0.0011	1.2393	0.0052	0.0684	0.0033
NBP[1]325*	0.3029	0.0008	0.9528	0.0040	0.0521	0.0025
NBP[1]351*	0.2456	0.0006	0.8214	0.0035	0.0445	0.0021
NBP[1]377*	0.2247	0.0006	0.8014	0.0034	0.0429	0.0021
NBP[1]402*	0.2061	0.0005	0.7838	0.0033	0.0416	0.0020
NBP[1]428*	0.1961	0.0005	0.7956	0.0033	0.0418	0.0020
NBP[1]454*	0.1956	0.0005	0.8480	0.0036	0.0441	0.0021
NBP[1]480*	0.1982	0.0005	0.9182	0.0039	0.0473	0.0023
NBP[1]505*	0.1920	0.0005	0.9484	0.0040	0.0484	0.0023
NBP[1]531*	0.1852	0.0005	0.9740	0.0041	0.0492	0.0024
NBP[1]557*	0.1784	0.0005	0.9978	0.0042	0.0500	0.0024
NBP[1]582*	0.1706	0.0004	1.0132	0.0043	0.0503	0.0024
NBP[1]608*	0.1643	0.0004	1.0351	0.0044	0.0510	0.0025
NBP[1]634*	0.1611	0.0004	1.0753	0.0045	0.0526	0.0025
NBP[1]659*	0.1586	0.0004	1.1194	0.0047	0.0543	0.0026
NBP[1]685*	0.1641	0.0004	1.2227	0.0051	0.0588	0.0028
NBP[1]711*	0.1715	0.0004	1.3445	0.0057	0.0642	0.0031
NBP[1]736*	0.1697	0.0004	1.3915	0.0059	0.0659	0.0032
NBP[1]762*	0.1653	0.0004	1.4214	0.0060	0.0669	0.0032
NBP[1]788*	0.1585	0.0004	1.4424	0.0061	0.0674	0.0032
NBP[1]825*	0.2655	0.0007	2.5963	0.0109	0.1201	0.0058
NBP[1]873*	0.1830	0.0005	1.9404	0.0082	0.0887	0.0043
NBP[1]926*	0.1437	0.0004	1.6472	0.0069	0.0744	0.0036
NBP[1]978*	0.1474	0.0004	1.8524	0.0078	0.0825	0.0040
NBP[1]1021*	0.0728	0.0002	0.9655	0.0041	0.0426	0.0020
NBP[1]1075*	0.0449	0.0001	0.6310	0.0027	0.0276	0.0013
NBP[1]1123*	0.0417	0.0001	0.6267	0.0026	0.0271	0.0013
NBP[1]1173*	0.0300	0.0001	0.4772	0.0020	0.0205	0.0010
NBP[1]1250*	0.0393	0.0001	0.6767	0.0028	0.0287	0.0014

Licensed to: PETROCHEMICAL ENGINEERIN
* Specified by user.

Material Stream: Pandhi (continued)

Fluid Package: Basis-1
Property Package: Peng-Robinson

COMPOSITION

Overall Phase (continued)

Vapour Fraction 0.6833

COMPONENTS	MOLAR FLOW (kgmole/h)	MOLE FRACTION	MASS FLOW (tonne/d)	MASS FRACTION	LIQUID VOLUME FLOW (m3/h)	LIQUID VOLUME FRACTION
NBP[1]1339*	0.0364	0.0001	0.6999	0.0029	0.0291	0.0014
NBP[1]1432*	0.0257	0.0001	0.5397	0.0023	0.0221	0.0011
NBP[1]1528*	0.0180	0.0000	0.4082	0.0017	0.0165	0.0008
NBP[1]1637*	0.0127	0.0000	0.3047	0.0013	0.0122	0.0006
NBP[1]1732*	0.0101	0.0000	0.2565	0.0011	0.0101	0.0005
NBP[1]1819*	0.0097	0.0000	0.2590	0.0011	0.0101	0.0005
NBP[1]1913*	0.0112	0.0000	0.3148	0.0013	0.0121	0.0006
Total	392.1623	1.0000	237.5489	1.0000	20.8162	1.0000

Vapour Phase

Phase Fraction 0.6833

COMPONENTS	MOLAR FLOW (kgmole/h)	MOLE FRACTION	MASS FLOW (tonne/d)	MASS FRACTION	LIQUID VOLUME FLOW (m3/h)	LIQUID VOLUME FRACTION
Methane	204.9954	0.7650	78.9293	0.5739	10.9846	0.6902
Ethane	27.6428	0.1032	19.9492	0.1451	2.3370	0.1468
Propane	13.5786	0.0507	14.3706	0.1045	1.1818	0.0743
i-Butane	1.5846	0.0059	2.2105	0.0161	0.1639	0.0103
n-Butane	2.8799	0.0107	4.0174	0.0292	0.2870	0.0180
i-Pentane	0.4627	0.0017	0.8013	0.0058	0.0536	0.0034
n-Pentane	0.4645	0.0017	0.8044	0.0058	0.0532	0.0033
n-Hexane	0.3692	0.0014	0.7636	0.0056	0.0480	0.0030
Nitrogen	5.5749	0.0208	3.7480	0.0273	0.1937	0.0122
CO2	9.1306	0.0341	9.6441	0.0701	0.4869	0.0306
H2S	0.0005	0.0000	0.0004	0.0000	0.0000	0.0000
H2O	0.3934	0.0015	0.1701	0.0012	0.0071	0.0004
NBP[1]95*	0.1423	0.0005	0.2320	0.0017	0.0142	0.0009
NBP[1]121*	0.1317	0.0005	0.2302	0.0017	0.0139	0.0009
NBP[1]147*	0.1253	0.0005	0.2411	0.0018	0.0143	0.0009
NBP[1]171*	0.1732	0.0006	0.3645	0.0027	0.0213	0.0013
NBP[1]195*	0.1580	0.0006	0.3548	0.0026	0.0205	0.0013
NBP[1]222*	0.0733	0.0003	0.1771	0.0013	0.0101	0.0006
NBP[1]248*	0.0376	0.0001	0.0977	0.0007	0.0055	0.0003
NBP[1]273*	0.0182	0.0001	0.0505	0.0004	0.0028	0.0002
NBP[1]299*	0.0083	0.0000	0.0246	0.0002	0.0014	0.0001
NBP[1]325*	0.0034	0.0000	0.0106	0.0001	0.0006	0.0000
NBP[1]351*	0.0015	0.0000	0.0050	0.0000	0.0003	0.0000
NBP[1]377*	0.0007	0.0000	0.0026	0.0000	0.0001	0.0000
NBP[1]402*	0.0003	0.0000	0.0013	0.0000	0.0001	0.0000
NBP[1]428*	0.0002	0.0000	0.0007	0.0000	0.0000	0.0000
NBP[1]454*	0.0001	0.0000	0.0004	0.0000	0.0000	0.0000
NBP[1]480*	0.0000	0.0000	0.0002	0.0000	0.0000	0.0000
NBP[1]505*	0.0000	0.0000	0.0001	0.0000	0.0000	0.0000
NBP[1]531*	0.0000	0.0000	0.0000	0.0000	0.0000	0.0000
NBP[1]557*	0.0000	0.0000	0.0000	0.0000	0.0000	0.0000
NBP[1]582*	0.0000	0.0000	0.0000	0.0000	0.0000	0.0000
NBP[1]608*	0.0000	0.0000	0.0000	0.0000	0.0000	0.0000
NBP[1]634*	0.0000	0.0000	0.0000	0.0000	0.0000	0.0000
NBP[1]659*	0.0000	0.0000	0.0000	0.0000	0.0000	0.0000
NBP[1]685*	0.0000	0.0000	0.0000	0.0000	0.0000	0.0000
NBP[1]711*	0.0000	0.0000	0.0000	0.0000	0.0000	0.0000
NBP[1]736*	0.0000	0.0000	0.0000	0.0000	0.0000	0.0000
NBP[1]762*	0.0000	0.0000	0.0000	0.0000	0.0000	0.0000
NBP[1]788*	0.0000	0.0000	0.0000	0.0000	0.0000	0.0000
NBP[1]825*	0.0000	0.0000	0.0000	0.0000	0.0000	0.0000
NBP[1]873*	0.0000	0.0000	0.0000	0.0000	0.0000	0.0000

* Specified by user.

Material Stream: Pandhi (continued)

Fluid Package: Basis-1
Property Package: Peng-Robinson

COMPOSITION

Vapour Phase (continued)

Phase Fraction 0.6833

COMPONENTS	MOLAR FLOW (kgmole/h)	MOLE FRACTION	MASS FLOW (tonne/d)	MASS FRACTION	LIQUID VOLUME FLOW (m3/h)	LIQUID VOLUME FRACTION
NBP[1]926*	0.0000	0.0000	0.0000	0.0000	0.0000	0.0000
NBP[1]978*	0.0000	0.0000	0.0000	0.0000	0.0000	0.0000
NBP[1]1021*	0.0000	0.0000	0.0000	0.0000	0.0000	0.0000
NBP[1]1075*	0.0000	0.0000	0.0000	0.0000	0.0000	0.0000
NBP[1]1123*	0.0000	0.0000	0.0000	0.0000	0.0000	0.0000
NBP[1]1173*	0.0000	0.0000	0.0000	0.0000	0.0000	0.0000
NBP[1]1250*	0.0000	0.0000	0.0000	0.0000	0.0000	0.0000
NBP[1]1339*	0.0000	0.0000	0.0000	0.0000	0.0000	0.0000
NBP[1]1432*	0.0000	0.0000	0.0000	0.0000	0.0000	0.0000
NBP[1]1528*	0.0000	0.0000	0.0000	0.0000	0.0000	0.0000
NBP[1]1637*	0.0000	0.0000	0.0000	0.0000	0.0000	0.0000
NBP[1]1732*	0.0000	0.0000	0.0000	0.0000	0.0000	0.0000
NBP[1]1819*	0.0001	0.0000	0.0033	0.0000	0.0001	0.0000
NBP[1]1913*	0.0112	0.0000	0.3148	0.0023	0.0121	0.0008
Total	267.9625	1.0000	137.5201	1.0000	15.9142	1.0000

Liquid Phase

Phase Fraction 4.555e-002

COMPONENTS	MOLAR FLOW (kgmole/h)	MOLE FRACTION	MASS FLOW (tonne/d)	MASS FRACTION	LIQUID VOLUME FLOW (m3/h)	LIQUID VOLUME FRACTION
Methane	2.0486	0.1147	0.7888	0.0146	0.1098	0.0368
Ethane	1.1578	0.0648	0.8356	0.0155	0.0979	0.0328
Propane	1.6892	0.0946	1.7877	0.0331	0.1470	0.0493
i-Butane	0.4441	0.0249	0.6195	0.0115	0.0459	0.0154
n-Butane	1.0714	0.0600	1.4946	0.0277	0.1068	0.0358
i-Pentane	0.3868	0.0217	0.6697	0.0124	0.0448	0.0150
n-Pentane	0.4957	0.0278	0.8584	0.0159	0.0568	0.0191
n-Hexane	1.1006	0.0616	2.2764	0.0421	0.1431	0.0480
Nitrogen	0.0232	0.0013	0.0156	0.0003	0.0008	0.0003
CO2	0.2419	0.0135	0.2555	0.0047	0.0129	0.0043
H2S	0.0000	0.0000	0.0000	0.0000	0.0000	0.0000
H2O	0.0108	0.0006	0.0047	0.0001	0.0002	0.0001
NBP[1]95*	0.1460	0.0082	0.2380	0.0044	0.0146	0.0049
NBP[1]121*	0.2065	0.0116	0.3610	0.0067	0.0218	0.0073
NBP[1]147*	0.3062	0.0171	0.5893	0.0109	0.0350	0.0118
NBP[1]171*	0.6492	0.0363	1.3661	0.0253	0.0800	0.0268
NBP[1]195*	0.9178	0.0514	2.0612	0.0382	0.1193	0.0400
NBP[1]222*	0.7270	0.0407	1.7560	0.0325	0.1004	0.0337
NBP[1]248*	0.6280	0.0352	1.6311	0.0302	0.0921	0.0309
NBP[1]273*	0.5176	0.0290	1.4376	0.0266	0.0803	0.0269
NBP[1]299*	0.4102	0.0230	1.2147	0.0225	0.0671	0.0225
NBP[1]325*	0.2995	0.0168	0.9422	0.0174	0.0515	0.0173
NBP[1]351*	0.2441	0.0137	0.8164	0.0151	0.0442	0.0148
NBP[1]377*	0.2240	0.0125	0.7988	0.0148	0.0428	0.0144
NBP[1]402*	0.2058	0.0115	0.7825	0.0145	0.0415	0.0139
NBP[1]428*	0.1959	0.0110	0.7949	0.0147	0.0417	0.0140
NBP[1]454*	0.1955	0.0109	0.8477	0.0157	0.0441	0.0148
NBP[1]480*	0.1981	0.0111	0.9180	0.0170	0.0473	0.0159
NBP[1]505*	0.1920	0.0107	0.9483	0.0176	0.0484	0.0162
NBP[1]531*	0.1852	0.0104	0.9740	0.0180	0.0492	0.0165
NBP[1]557*	0.1784	0.0100	0.9978	0.0185	0.0500	0.0168
NBP[1]582*	0.1706	0.0095	1.0132	0.0188	0.0503	0.0169
NBP[1]608*	0.1643	0.0092	1.0351	0.0192	0.0510	0.0171
NBP[1]634*	0.1611	0.0090	1.0753	0.0199	0.0526	0.0176
NBP[1]659*	0.1586	0.0089	1.1194	0.0207	0.0543	0.0182

* Specified by user.

Material Stream: Pandhi (continued)

Fluid Package: Basis-1
Property Package: Peng-Robinson

COMPOSITION

Liquid Phase (continued)

Phase Fraction 4.555e-002

COMPONENTS	MOLAR FLOW (kgmole/h)	MOLE FRACTION	MASS FLOW (tonne/d)	MASS FRACTION	LIQUID VOLUME FLOW (m3/h)	LIQUID VOLUME FRACTION
NBP[1]685*	0.1641	0.0092	1.2227	0.0226	0.0588	0.0197
NBP[1]711*	0.1715	0.0096	1.3445	0.0249	0.0642	0.0215
NBP[1]736*	0.1697	0.0095	1.3915	0.0258	0.0659	0.0221
NBP[1]762*	0.1653	0.0093	1.4214	0.0263	0.0669	0.0224
NBP[1]788*	0.1585	0.0089	1.4424	0.0267	0.0674	0.0226
NBP[1]825*	0.2655	0.0149	2.5963	0.0481	0.1201	0.0403
NBP[1]873*	0.1830	0.0102	1.9404	0.0359	0.0887	0.0298
NBP[1]926*	0.1437	0.0080	1.6472	0.0305	0.0744	0.0250
NBP[1]978*	0.1474	0.0082	1.8524	0.0343	0.0825	0.0277
NBP[1]1021*	0.0728	0.0041	0.9655	0.0179	0.0426	0.0143
NBP[1]1075*	0.0449	0.0025	0.6310	0.0117	0.0276	0.0093
NBP[1]1123*	0.0417	0.0023	0.6267	0.0116	0.0271	0.0091
NBP[1]1173*	0.0300	0.0017	0.4772	0.0088	0.0205	0.0069
NBP[1]1250*	0.0393	0.0022	0.6767	0.0125	0.0287	0.0096
NBP[1]1339*	0.0364	0.0020	0.6999	0.0130	0.0291	0.0098
NBP[1]1432*	0.0257	0.0014	0.5397	0.0100	0.0221	0.0074
NBP[1]1528*	0.0180	0.0010	0.4082	0.0076	0.0165	0.0055
NBP[1]1637*	0.0127	0.0007	0.3047	0.0056	0.0122	0.0041
NBP[1]1732*	0.0101	0.0006	0.2565	0.0047	0.0101	0.0034
NBP[1]1819*	0.0096	0.0005	0.2557	0.0047	0.0100	0.0033
NBP[1]1913*	0.0000	0.0000	0.0000	0.0000	0.0000	0.0000
Total	17.8617	1.0000	54.0255	1.0000	2.9809	1.0000

Phase Fraction

COMPONENTS	MOLAR FLOW	MOLE FRACTION	MASS FLOW	MASS FRACTION	LIQUID VOLUME FLOW	LIQUID VOLUME FRACTION

Licensed to: PETROCHEMICAL ENGINEERIN
* Specified by user.

Material Stream: Pandhi (continued)

Fluid Package: Basis-1
Property Package: Peng-Robinson

COMPOSITION

COMPONENTS	MOLAR FLOW	MOLE FRACTION	MASS FLOW	MASS FRACTION	LIQUID VOLUME FLOW	LIQUID VOLUME FRACTION (Phase Fraction)
Total		1.0000		1.0000		1.0000

Material Stream: PANDHI oil

Fluid Package: Basis-1
Property Package: Peng-Robinson

CONDITIONS

		Overall
Vapour / Phase Fraction		---
Temperature:	(F)	---
Pressure:	(psig)	450.0 *
Molar Flow	(MMSCFD)	0.1957
Mass Flow	(tonne/d)	45.85
Std Ideal Liq Vol Flow	(barrel/day)	346.1
Molar Enthalpy	(kJ/kgmole)	---
Molar Entropy	(kJ/kgmole-C)	---
Heat Flow	(MMBtu/hr)	---
Liq Vol Flow @Std Cond	(barrel/day)	346.1 *

PROPERTIES

		Overall
Molecular Weight		196.0
Molar Density	(kgmole/m3)	---
Mass Density	(kg/m3)	---
Act. Volume Flow	(barrel/day)	---
Mass Enthalpy	(kJ/kg)	---
Mass Entropy	(kJ/kg-C)	---

* Specified by user.

Material Stream: PANDHI oil (continued)

Fluid Package: Basis-1
Property Package: Peng-Robinson

PROPERTIES

		Overall				
Heat Capacity	(kJ/kgmole-C)	---				
Mass Heat Capacity	(kJ/kg-C)	---				
LHV Molar Basis (Std)	(Btu/SCF)	---				
LHV Mass Basis (Std)	(kJ/kg)	---				
Phase Fraction [Vol. Basis]		0.0000				
Phase Fraction [Mass Basis]		0.0000				
Partial Pressure of CO2	(psig)	-14.70				
Cost Based on Flow	(Cost/s)	0.0000				
Act. Gas Flow	(ACT_m3/h)	---				
Avg. Liq. Density	(kgmole/m3)	4.251				
Specific Heat	(kJ/kgmole-C)	---				
Std. Gas Flow	(STD_m3/h)	230.4				
Std. Ideal Liq. Mass Density	(kg/m3)	833.3				
Act. Liq. Flow	(barrel/day)	---				
Z Factor		---				
Watson K		11.77				
User Property		---				
Partial Pressure of H2S	(psig)	-14.70				
Cp/(Cp - R)		---				
Cp/Cv		---				
Heat of Vap.	(kJ/kgmole)	---				
Kinematic Viscosity	(cSt)	---				
Liq. Mass Density (Std. Cond)	(kg/m3)	833.3				
Liq. Vol. Flow (Std. Cond)	(barrel/day)	346.1				
Liquid Fraction		---				
Molar Volume	(m3/kgmole)	---				
Mass Heat of Vap.	(kJ/kg)	---				
Phase Fraction [Molar Basis]		---				
Surface Tension	(dyne/cm)	---				
Thermal Conductivity	(W/m-K)	---				
Viscosity	(cP)	---				
Cv (Semi-Ideal)	(kJ/kgmole-C)	---				
Mass Cv (Semi-Ideal)	(kJ/kg-C)	---				
Cv	(kJ/kgmole-C)	---				
Mass Cv	(kJ/kg-C)	---				
Cv (Ent. Method)	(kJ/kgmole-C)	---				
Mass Cv (Ent. Method)	(kJ/kg-C)	---				
Cp/Cv (Ent. Method)		---				
Reid VP at 37.8 C	(psig)	---				
True VP at 37.8 C	(psig)	---				
Liq. Vol. Flow - Sum(Std. Cond)	(barrel/day)	0.0000				
HHV Molar Basis (Std)	(Btu/SCF)	---				
HHV Mass Basis (Std)	(kJ/kg)	---				
CO2 Loading		---				
CO2 App ML Con	(kgmole/m3)	---				
CO2 App WT Con	(kgmol/kg)	0.0000				
Phase Fraction [Act. Vol. Basis]		0.0000				
Mass Exergy	(kJ/kg)	9.739e+006				
Viscosity Index		---				
Ideal Gas Cp/Cv		1.000				
Ideal Gas Cp	(kJ/kgmole-C)	-5.304e+005				
Mass Ideal Gas Cp	(kJ/kg-C)	-2706				
Bubble Point Pressure	(psig)	---				

* Specified by user.

Material Stream: PANDHI oil (continued)

Fluid Package: Basis-1
Property Package: Peng-Robinson

COMPOSITION

Overall Phase

Vapour Fraction ---

COMPONENTS	MOLAR FLOW (kgmole/h)	MOLE FRACTION	MASS FLOW (tonne/d)	MASS FRACTION	LIQUID VOLUME FLOW (m3/h)	LIQUID VOLUME FRACTION
Methane	0.0000 *	0.0000 *	0.0000 *	0.0000 *	0.0000 *	0.0000 *
Ethane	0.0000 *	0.0000 *	0.0000 *	0.0000 *	0.0000 *	0.0000 *
Propane	0.0000 *	0.0000 *	0.0000 *	0.0000 *	0.0000 *	0.0000 *
i-Butane	0.0000 *	0.0000 *	0.0000 *	0.0000 *	0.0000 *	0.0000 *
n-Butane	0.0000 *	0.0000 *	0.0000 *	0.0000 *	0.0000 *	0.0000 *
i-Pentane	0.0000 *	0.0000 *	0.0000 *	0.0000 *	0.0000 *	0.0000 *
n-Pentane	0.0000 *	0.0000 *	0.0000 *	0.0000 *	0.0000 *	0.0000 *
n-Hexane	0.0000 *	0.0000 *	0.0000 *	0.0000 *	0.0000 *	0.0000 *
Nitrogen	0.0000 *	0.0000 *	0.0000 *	0.0000 *	0.0000 *	0.0000 *
CO2	0.0000 *	0.0000 *	0.0000 *	0.0000 *	0.0000 *	0.0000 *
H2S	0.0000 *	0.0000 *	0.0000 *	0.0000 *	0.0000 *	0.0000 *
H2O	0.0000 *	0.0000 *	0.0000 *	0.0000 *	0.0000 *	0.0000 *
NBP[1]95*	0.2390 *	0.0245 *	0.3897 *	0.0085 *	0.0239 *	0.0104 *
NBP[1]121*	0.2888 *	0.0296 *	0.5049 *	0.0110 *	0.0305 *	0.0133 *
NBP[1]147*	0.3822 *	0.0392 *	0.7356 *	0.0160 *	0.0437 *	0.0191 *
NBP[1]171*	0.7533 *	0.0773 *	1.5851 *	0.0346 *	0.0928 *	0.0405 *
NBP[1]195*	1.0134 *	0.1040 *	2.2759 *	0.0496 *	0.1317 *	0.0574 *
NBP[1]222*	0.7725 *	0.0793 *	1.8658 *	0.0407 *	0.1066 *	0.0465 *
NBP[1]248*	0.6522 *	0.0669 *	1.6937 *	0.0369 *	0.0956 *	0.0417 *
NBP[1]273*	0.5297 *	0.0544 *	1.4712 *	0.0321 *	0.0821 *	0.0358 *
NBP[1]299*	0.4159 *	0.0427 *	1.2317 *	0.0269 *	0.0680 *	0.0297 *
NBP[1]325*	0.3019 *	0.0310 *	0.9498 *	0.0207 *	0.0519 *	0.0227 *
NBP[1]351*	0.2452 *	0.0252 *	0.8201 *	0.0179 *	0.0444 *	0.0194 *
NBP[1]377*	0.2246 *	0.0230 *	0.8008 *	0.0175 *	0.0429 *	0.0187 *
NBP[1]402*	0.2060 *	0.0211 *	0.7836 *	0.0171 *	0.0416 *	0.0181 *
NBP[1]428*	0.1960 *	0.0201 *	0.7954 *	0.0173 *	0.0418 *	0.0182 *
NBP[1]454*	0.1956 *	0.0201 *	0.8479 *	0.0185 *	0.0441 *	0.0192 *
NBP[1]480*	0.1982 *	0.0203 *	0.9181 *	0.0200 *	0.0473 *	0.0206 *
NBP[1]505*	0.1920 *	0.0197 *	0.9484 *	0.0207 *	0.0484 *	0.0211 *
NBP[1]531*	0.1852 *	0.0190 *	0.9740 *	0.0212 *	0.0492 *	0.0215 *
NBP[1]557*	0.1784 *	0.0183 *	0.9978 *	0.0218 *	0.0500 *	0.0218 *
NBP[1]582*	0.1706 *	0.0175 *	1.0132 *	0.0221 *	0.0503 *	0.0220 *
NBP[1]608*	0.1643 *	0.0169 *	1.0351 *	0.0226 *	0.0510 *	0.0222 *
NBP[1]634*	0.1611 *	0.0165 *	1.0753 *	0.0235 *	0.0526 *	0.0229 *
NBP[1]659*	0.1586 *	0.0163 *	1.1194 *	0.0244 *	0.0543 *	0.0237 *
NBP[1]685*	0.1641 *	0.0168 *	1.2227 *	0.0267 *	0.0588 *	0.0257 *
NBP[1]711*	0.1715 *	0.0176 *	1.3445 *	0.0293 *	0.0642 *	0.0280 *
NBP[1]736*	0.1697 *	0.0174 *	1.3915 *	0.0303 *	0.0659 *	0.0288 *
NBP[1]762*	0.1653 *	0.0170 *	1.4214 *	0.0310 *	0.0669 *	0.0292 *
NBP[1]788*	0.1585 *	0.0163 *	1.4424 *	0.0315 *	0.0674 *	0.0294 *
NBP[1]825*	0.2655 *	0.0272 *	2.5963 *	0.0566 *	0.1201 *	0.0524 *
NBP[1]873*	0.1830 *	0.0188 *	1.9404 *	0.0423 *	0.0887 *	0.0387 *
NBP[1]926*	0.1437 *	0.0147 *	1.6472 *	0.0359 *	0.0744 *	0.0325 *
NBP[1]978*	0.1474 *	0.0151 *	1.8524 *	0.0404 *	0.0825 *	0.0360 *
NBP[1]1021*	0.0728 *	0.0075 *	0.9655 *	0.0211 *	0.0426 *	0.0186 *
NBP[1]1075*	0.0449 *	0.0046 *	0.6310 *	0.0138 *	0.0276 *	0.0120 *
NBP[1]1123*	0.0417 *	0.0043 *	0.6267 *	0.0137 *	0.0271 *	0.0118 *
NBP[1]1173*	0.0300 *	0.0031 *	0.4772 *	0.0104 *	0.0205 *	0.0089 *
NBP[1]1250*	0.0393 *	0.0040 *	0.6767 *	0.0148 *	0.0287 *	0.0125 *
NBP[1]1339*	0.0364 *	0.0037 *	0.6999 *	0.0153 *	0.0291 *	0.0127 *
NBP[1]1432*	0.0257 *	0.0026 *	0.5397 *	0.0118 *	0.0221 *	0.0097 *
NBP[1]1528*	0.0180 *	0.0018 *	0.4082 *	0.0089 *	0.0165 *	0.0072 *
NBP[1]1637*	0.0127 *	0.0013 *	0.3047 *	0.0066 *	0.0122 *	0.0053 *
NBP[1]1732*	0.0101 *	0.0010 *	0.2565 *	0.0056 *	0.0101 *	0.0044 *

Licensed to: PETROCHEMICAL ENGINEERIN
* Specified by user.

Material Stream: PANDHI oil (continued)

Fluid Package: Basis-1
Property Package: Peng-Robinson

COMPOSITION

Overall Phase (continued)

Vapour Fraction ---

COMPONENTS	MOLAR FLOW (kgmole/h)	MOLE FRACTION	MASS FLOW (tonne/d)	MASS FRACTION	LIQUID VOLUME FLOW (m3/h)	LIQUID VOLUME FRACTION
NBP[1]1819*	0.0097 *	0.0010 *	0.2590 *	0.0056 *	0.0101 *	0.0044 *
NBP[1]1913*	0.0112 *	0.0011 *	0.3148 *	0.0069 *	0.0121 *	0.0053 *
Total	9.7460	1.0000	45.8513	1.0000	2.2926	1.0000

Material Stream: Pandhi-C

Fluid Package: Basis-1
Property Package: Peng-Robinson

CONDITIONS

	Overall	Vapour Phase	Liquid Phase	Aqueous Phase
Vapour / Phase Fraction	0.0000	0.0000	1.0000	0.0000
Temperature: (F)	84.79	84.79	84.79	84.79
Pressure: (psig)	445.0	445.0	445.0	445.0
Molar Flow (MMSCFD)	0.3574	0.0000	0.3574	0.0000
Mass Flow (tonne/d)	53.98	0.0000	53.98	0.0000
Std Ideal Liq Vol Flow (barrel/day)	449.3	0.0000	449.3	0.0000
Molar Enthalpy (kJ/kgmole)	-2.875e+005	-8.928e+004	-2.875e+005	-2.859e+005
Molar Entropy (kJ/kgmole-C)	218.7	159.3	218.7	54.83
Heat Flow (MMBtu/hr)	-4.850	0.0000	-4.850	0.0000
Liq Vol Flow @Std Cond (barrel/day)	434.3 *	0.0000	434.3	0.0000

PROPERTIES

	Overall	Vapour Phase	Liquid Phase	Aqueous Phase
Molecular Weight	126.4	21.39	126.4	18.03
Molar Density (kgmole/m3)	6.079	1.408	6.079	55.76
Mass Density (kg/m3)	768.1	30.10	768.1	1005
Act. Volume Flow (barrel/day)	442.0	0.0000	442.0	0.0000
Mass Enthalpy (kJ/kg)	-2275	-4175	-2275	-1.586e+004
Mass Entropy (kJ/kg-C)	1.731	7.448	1.731	3.042
Heat Capacity (kJ/kgmole-C)	253.8	47.13	253.8	77.64
Mass Heat Capacity (kJ/kg-C)	2.009	2.204	2.009	4.307
LHV Molar Basis (Std) (Btu/SCF)	---	---	---	1.809e-004
LHV Mass Basis (Std) (kJ/kg)	---	---	---	8.858e-003
Phase Fraction [Vol. Basis]	---	---	1.000	---
Phase Fraction [Mass Basis]	0.0000	0.0000	1.000	0.0000
Partial Pressure of CO2 (psig)	-14.70	---	---	---
Cost Based on Flow (Cost/s)	0.0000	0.0000	0.0000	0.0000
Act. Gas Flow (ACT_m3/h)	---	---	---	---
Avg. Liq. Density (kgmole/m3)	5.980	16.84	5.980	55.35
Specific Heat (kJ/kgmole-C)	253.8	47.13	253.8	77.64
Std. Gas Flow (STD_m3/h)	420.9	0.0000	420.9	0.0000
Std. Ideal Liq. Mass Density (kg/m3)	755.6	360.1	755.6	997.8
Act. Liq. Flow (barrel/day)	442.0	---	442.0	0.0000
Z Factor	---	0.8953	0.2073	2.260e-002
Watson K	11.99	17.28	11.99	8.497
User Property	---	---	---	---
Partial Pressure of H2S (psig)	-14.70	---	---	---
Cp/(Cp - R)	1.034	1.214	1.034	1.120
Cp/Cv	1.034	1.388	1.034	1.149
Heat of Vap. (kJ/kgmole)	2.556e+005	---	---	---
Kinematic Viscosity (cSt)	12.25	0.3993	12.25	0.8047
Liq. Mass Density (Std. Cond) (kg/m3)	781.8	0.9081	781.8	1015
Liq. Vol. Flow (Std. Cond) (barrel/day)	434.3	0.0000	434.3	0.0000
Liquid Fraction	1.000	0.0000	1.000	1.000
Molar Volume (m3/kgmole)	0.1645	0.7104	0.1645	1.793e-002

* Specified by user.

Material Stream: Pandhi-C (continued)

Fluid Package: Basis-1
Property Package: Peng-Robinson

PROPERTIES

	Overall	Vapour Phase	Liquid Phase	Aqueous Phase
Mass Heat of Vap. (kJ/kg)	2023	---	---	---
Phase Fraction [Molar Basis]	0.0000	0.0000	1.0000	0.0000
Surface Tension (dyne/cm)	15.96	---	15.96	71.32
Thermal Conductivity (W/m-K)	0.1006	3.302e-002	0.1006	0.6173
Viscosity (cP)	9.409	1.202e-002	9.409	0.8089
Cv (Semi-Ideal) (kJ/kgmole-C)	245.5	38.81	245.5	69.33
Mass Cv (Semi-Ideal) (kJ/kg-C)	1.943	1.815	1.943	3.846
Cv (kJ/kgmole-C)	245.5	33.96	245.5	67.56
Mass Cv (kJ/kg-C)	1.943	1.588	1.943	3.748
Cv (Ent. Method) (kJ/kgmole-C)	---	-3697	---	66.88
Mass Cv (Ent. Method) (kJ/kg-C)	---	-172.9	---	3.711
Cp/Cv (Ent. Method)	---	-1.275e-002	---	1.161
Reid VP at 37.8 C (psig)	97.87	---	97.87	---
True VP at 37.8 C (psig)	475.9	3607	475.9	17.11
Liq. Vol. Flow - Sum(Std. Cond) (barrel/day)	434.3	0.0000	434.3	0.0000
HHV Molar Basis (Std) (Btu/SCF)	---	---	---	46.45
HHV Mass Basis (Std) (kJ/kg)	---	---	---	2274
CO2 Loading	---	---	---	---
CO2 App ML Con (kgmole/m3)	8.172e-002	---	8.172e-002	---
CO2 App WT Con (kgmol/kg)	1.064e-004	---	1.064e-004	---
Phase Fraction [Act. Vol. Basis]	0.0000	0.0000	1.000	0.0000
Mass Exergy (kJ/kg)	19.83	---	---	---
Viscosity Index	24.69	---	---	---
Ideal Gas Cp/Cv	1.043	1.249	1.043	1.329
Ideal Gas Cp (kJ/kgmole-C)	200.0	41.72	200.0	33.60
Mass Ideal Gas Cp (kJ/kg-C)	1.583	1.951	1.583	1.864
Bubble Point Pressure (psig)	445.0	---	---	---

COMPOSITION

Overall Phase

Vapour Fraction 0.0000

COMPONENTS	MOLAR FLOW (kgmole/h)	MOLE FRACTION	MASS FLOW (tonne/d)	MASS FRACTION	LIQUID VOLUME FLOW (m3/h)	LIQUID VOLUME FRACTION
Methane	2.0221	0.1136	0.7786	0.0144	0.1084	0.0364
Ethane	1.1465	0.0644	0.8274	0.0153	0.0969	0.0326
Propane	1.6775	0.0942	1.7753	0.0329	0.1460	0.0490
i-Butane	0.4420	0.0248	0.6166	0.0114	0.0457	0.0154
n-Butane	1.0672	0.0600	1.4887	0.0276	0.1064	0.0357
i-Pentane	0.3860	0.0217	0.6684	0.0124	0.0447	0.0150
n-Pentane	0.4950	0.0278	0.8571	0.0159	0.0567	0.0191
n-Hexane	1.1004	0.0618	2.2760	0.0422	0.1431	0.0481
Nitrogen	0.0228	0.0013	0.0153	0.0003	0.0008	0.0003
CO2	0.2393	0.0134	0.2527	0.0047	0.0128	0.0043
H2S	0.0000	0.0000	0.0000	0.0000	0.0000	0.0000
H2O	0.0107	0.0006	0.0046	0.0001	0.0002	0.0001
NBP[1]95*	0.1457	0.0082	0.2376	0.0044	0.0146	0.0049
NBP[1]121*	0.2063	0.0116	0.3606	0.0067	0.0218	0.0073
NBP[1]147*	0.3061	0.0172	0.5891	0.0109	0.0350	0.0118
NBP[1]171*	0.6492	0.0365	1.3660	0.0253	0.0800	0.0269
NBP[1]195*	0.9179	0.0516	2.0614	0.0382	0.1193	0.0401
NBP[1]222*	0.7271	0.0408	1.7563	0.0325	0.1004	0.0337
NBP[1]248*	0.6282	0.0353	1.6313	0.0302	0.0921	0.0309
NBP[1]273*	0.5177	0.0291	1.4378	0.0266	0.0803	0.0270
NBP[1]299*	0.4103	0.0230	1.2148	0.0225	0.0671	0.0225
NBP[1]325*	0.2995	0.0168	0.9422	0.0175	0.0515	0.0173
NBP[1]351*	0.2442	0.0137	0.8165	0.0151	0.0442	0.0148
NBP[1]377*	0.2240	0.0126	0.7989	0.0148	0.0428	0.0144

Licensed to: PETROCHEMICAL ENGINEERIN
* Specified by user.

Material Stream: Pandhi-C (continued)

Fluid Package: Basis-1
Property Package: Peng-Robinson

COMPOSITION

Overall Phase (continued)

Vapour Fraction 0.0000

COMPONENTS	MOLAR FLOW (kgmole/h)	MOLE FRACTION	MASS FLOW (tonne/d)	MASS FRACTION	LIQUID VOLUME FLOW (m3/h)	LIQUID VOLUME FRACTION
NBP[1]402*	0.2058	0.0116	0.7826	0.0145	0.0415	0.0139
NBP[1]428*	0.1959	0.0110	0.7949	0.0147	0.0417	0.0140
NBP[1]454*	0.1955	0.0110	0.8477	0.0157	0.0441	0.0148
NBP[1]480*	0.1981	0.0111	0.9180	0.0170	0.0473	0.0159
NBP[1]505*	0.1920	0.0108	0.9483	0.0176	0.0484	0.0162
NBP[1]531*	0.1852	0.0104	0.9740	0.0180	0.0492	0.0165
NBP[1]557*	0.1784	0.0100	0.9978	0.0185	0.0500	0.0168
NBP[1]582*	0.1706	0.0096	1.0132	0.0188	0.0503	0.0169
NBP[1]608*	0.1643	0.0092	1.0351	0.0192	0.0510	0.0171
NBP[1]634*	0.1611	0.0090	1.0753	0.0199	0.0526	0.0177
NBP[1]659*	0.1586	0.0089	1.1194	0.0207	0.0543	0.0182
NBP[1]685*	0.1641	0.0092	1.2227	0.0227	0.0588	0.0198
NBP[1]711*	0.1715	0.0096	1.3445	0.0249	0.0642	0.0216
NBP[1]736*	0.1697	0.0095	1.3915	0.0258	0.0659	0.0221
NBP[1]762*	0.1653	0.0093	1.4214	0.0263	0.0669	0.0225
NBP[1]788*	0.1585	0.0089	1.4424	0.0267	0.0674	0.0226
NBP[1]825*	0.2655	0.0149	2.5963	0.0481	0.1201	0.0404
NBP[1]873*	0.1830	0.0103	1.9404	0.0359	0.0887	0.0298
NBP[1]926*	0.1437	0.0081	1.6472	0.0305	0.0744	0.0250
NBP[1]978*	0.1474	0.0083	1.8524	0.0343	0.0825	0.0277
NBP[1]1021*	0.0728	0.0041	0.9655	0.0179	0.0426	0.0143
NBP[1]1075*	0.0449	0.0025	0.6310	0.0117	0.0276	0.0093
NBP[1]1123*	0.0417	0.0023	0.6267	0.0116	0.0271	0.0091
NBP[1]1173*	0.0300	0.0017	0.4772	0.0088	0.0205	0.0069
NBP[1]1250*	0.0393	0.0022	0.6767	0.0125	0.0287	0.0096
NBP[1]1339*	0.0364	0.0020	0.6999	0.0130	0.0291	0.0098
NBP[1]1432*	0.0257	0.0014	0.5397	0.0100	0.0221	0.0074
NBP[1]1528*	0.0180	0.0010	0.4082	0.0076	0.0165	0.0055
NBP[1]1637*	0.0127	0.0007	0.3047	0.0056	0.0122	0.0041
NBP[1]1732*	0.0101	0.0006	0.2565	0.0048	0.0101	0.0034
NBP[1]1819*	0.0096	0.0005	0.2561	0.0047	0.0100	0.0034
NBP[1]1913*	0.0000	0.0000	0.0000	0.0000	0.0000	0.0000
Total	17.8012	1.0000	53.9808	1.0000	2.9766	1.0000

Vapour Phase

Phase Fraction 0.0000

COMPONENTS	MOLAR FLOW (kgmole/h)	MOLE FRACTION	MASS FLOW (tonne/d)	MASS FRACTION	LIQUID VOLUME FLOW (m3/h)	LIQUID VOLUME FRACTION
Methane	0.0000	0.7649	0.0000	0.5738	0.0000	0.6901
Ethane	0.0000	0.1032	0.0000	0.1451	0.0000	0.1469
Propane	0.0000	0.0507	0.0000	0.1046	0.0000	0.0743
i-Butane	0.0000	0.0059	0.0000	0.0161	0.0000	0.0103
n-Butane	0.0000	0.0108	0.0000	0.0292	0.0000	0.0181
i-Pentane	0.0000	0.0017	0.0000	0.0058	0.0000	0.0034
n-Pentane	0.0000	0.0017	0.0000	0.0059	0.0000	0.0033
n-Hexane	0.0000	0.0014	0.0000	0.0056	0.0000	0.0030
Nitrogen	0.0000	0.0208	0.0000	0.0272	0.0000	0.0122
CO2	0.0000	0.0341	0.0000	0.0701	0.0000	0.0306
H2S	0.0000	0.0000	0.0000	0.0000	0.0000	0.0000
H2O	0.0000	0.0015	0.0000	0.0012	0.0000	0.0004
NBP[1]95*	0.0000	0.0005	0.0000	0.0017	0.0000	0.0009
NBP[1]121*	0.0000	0.0005	0.0000	0.0017	0.0000	0.0009
NBP[1]147*	0.0000	0.0005	0.0000	0.0018	0.0000	0.0009
NBP[1]171*	0.0000	0.0006	0.0000	0.0027	0.0000	0.0013
NBP[1]195*	0.0000	0.0006	0.0000	0.0026	0.0000	0.0013

* Specified by user.

Material Stream: Pandhi-C (continued)

Fluid Package: Basis-1
Property Package: Peng-Robinson

COMPOSITION

Vapour Phase (continued)

Phase Fraction 0.0000

COMPONENTS	MOLAR FLOW (kgmole/h)	MOLE FRACTION	MASS FLOW (tonne/d)	MASS FRACTION	LIQUID VOLUME FLOW (m3/h)	LIQUID VOLUME FRACTION
NBP[1]222*	0.0000	0.0003	0.0000	0.0013	0.0000	0.0006
NBP[1]248*	0.0000	0.0001	0.0000	0.0007	0.0000	0.0003
NBP[1]273*	0.0000	0.0001	0.0000	0.0004	0.0000	0.0002
NBP[1]299*	0.0000	0.0000	0.0000	0.0002	0.0000	0.0001
NBP[1]325*	0.0000	0.0000	0.0000	0.0001	0.0000	0.0000
NBP[1]351*	0.0000	0.0000	0.0000	0.0000	0.0000	0.0000
NBP[1]377*	0.0000	0.0000	0.0000	0.0000	0.0000	0.0000
NBP[1]402*	0.0000	0.0000	0.0000	0.0000	0.0000	0.0000
NBP[1]428*	0.0000	0.0000	0.0000	0.0000	0.0000	0.0000
NBP[1]454*	0.0000	0.0000	0.0000	0.0000	0.0000	0.0000
NBP[1]480*	0.0000	0.0000	0.0000	0.0000	0.0000	0.0000
NBP[1]505*	0.0000	0.0000	0.0000	0.0000	0.0000	0.0000
NBP[1]531*	0.0000	0.0000	0.0000	0.0000	0.0000	0.0000
NBP[1]557*	0.0000	0.0000	0.0000	0.0000	0.0000	0.0000
NBP[1]582*	0.0000	0.0000	0.0000	0.0000	0.0000	0.0000
NBP[1]608*	0.0000	0.0000	0.0000	0.0000	0.0000	0.0000
NBP[1]634*	0.0000	0.0000	0.0000	0.0000	0.0000	0.0000
NBP[1]659*	0.0000	0.0000	0.0000	0.0000	0.0000	0.0000
NBP[1]685*	0.0000	0.0000	0.0000	0.0000	0.0000	0.0000
NBP[1]711*	0.0000	0.0000	0.0000	0.0000	0.0000	0.0000
NBP[1]736*	0.0000	0.0000	0.0000	0.0000	0.0000	0.0000
NBP[1]762*	0.0000	0.0000	0.0000	0.0000	0.0000	0.0000
NBP[1]788*	0.0000	0.0000	0.0000	0.0000	0.0000	0.0000
NBP[1]825*	0.0000	0.0000	0.0000	0.0000	0.0000	0.0000
NBP[1]873*	0.0000	0.0000	0.0000	0.0000	0.0000	0.0000
NBP[1]926*	0.0000	0.0000	0.0000	0.0000	0.0000	0.0000
NBP[1]978*	0.0000	0.0000	0.0000	0.0000	0.0000	0.0000
NBP[1]1021*	0.0000	0.0000	0.0000	0.0000	0.0000	0.0000
NBP[1]1075*	0.0000	0.0000	0.0000	0.0000	0.0000	0.0000
NBP[1]1123*	0.0000	0.0000	0.0000	0.0000	0.0000	0.0000
NBP[1]1173*	0.0000	0.0000	0.0000	0.0000	0.0000	0.0000
NBP[1]1250*	0.0000	0.0000	0.0000	0.0000	0.0000	0.0000
NBP[1]1339*	0.0000	0.0000	0.0000	0.0000	0.0000	0.0000
NBP[1]1432*	0.0000	0.0000	0.0000	0.0000	0.0000	0.0000
NBP[1]1528*	0.0000	0.0000	0.0000	0.0000	0.0000	0.0000
NBP[1]1637*	0.0000	0.0000	0.0000	0.0000	0.0000	0.0000
NBP[1]1732*	0.0000	0.0000	0.0000	0.0000	0.0000	0.0000
NBP[1]1819*	0.0000	0.0000	0.0000	0.0000	0.0000	0.0000
NBP[1]1913*	0.0000	0.0000	0.0000	0.0023	0.0000	0.0008
Total	0.0000	1.0000	0.0000	1.0000	0.0000	1.0000

Liquid Phase

Phase Fraction 1.000

COMPONENTS	MOLAR FLOW (kgmole/h)	MOLE FRACTION	MASS FLOW (tonne/d)	MASS FRACTION	LIQUID VOLUME FLOW (m3/h)	LIQUID VOLUME FRACTION
Methane	2.0221	0.1136	0.7786	0.0144	0.1084	0.0364
Ethane	1.1465	0.0644	0.8274	0.0153	0.0969	0.0326
Propane	1.6775	0.0942	1.7753	0.0329	0.1460	0.0490
i-Butane	0.4420	0.0248	0.6166	0.0114	0.0457	0.0154
n-Butane	1.0672	0.0600	1.4887	0.0276	0.1064	0.0357
i-Pentane	0.3860	0.0217	0.6684	0.0124	0.0447	0.0150
n-Pentane	0.4950	0.0278	0.8571	0.0159	0.0567	0.0191
n-Hexane	1.1004	0.0618	2.2760	0.0422	0.1431	0.0481
Nitrogen	0.0228	0.0013	0.0153	0.0003	0.0008	0.0003
CO2	0.2393	0.0134	0.2527	0.0047	0.0128	0.0043

* Specified by user.

Material Stream: Pandhi-C (continued)

Fluid Package: Basis-1
Property Package: Peng-Robinson

COMPOSITION

Liquid Phase (continued)

Phase Fraction 1.000

COMPONENTS	MOLAR FLOW (kgmole/h)	MOLE FRACTION	MASS FLOW (tonne/d)	MASS FRACTION	LIQUID VOLUME FLOW (m3/h)	LIQUID VOLUME FRACTION
H2S	0.0000	0.0000	0.0000	0.0000	0.0000	0.0000
H2O	0.0107	0.0006	0.0046	0.0001	0.0002	0.0001
NBP[1]95*	0.1457	0.0082	0.2376	0.0044	0.0146	0.0049
NBP[1]121*	0.2063	0.0116	0.3606	0.0067	0.0218	0.0073
NBP[1]147*	0.3061	0.0172	0.5891	0.0109	0.0350	0.0118
NBP[1]171*	0.6492	0.0365	1.3660	0.0253	0.0800	0.0269
NBP[1]195*	0.9179	0.0516	2.0614	0.0382	0.1193	0.0401
NBP[1]222*	0.7271	0.0408	1.7563	0.0325	0.1004	0.0337
NBP[1]248*	0.6282	0.0353	1.6313	0.0302	0.0921	0.0309
NBP[1]273*	0.5177	0.0291	1.4378	0.0266	0.0803	0.0270
NBP[1]299*	0.4103	0.0230	1.2148	0.0225	0.0671	0.0225
NBP[1]325*	0.2995	0.0168	0.9422	0.0175	0.0515	0.0173
NBP[1]351*	0.2442	0.0137	0.8165	0.0151	0.0442	0.0148
NBP[1]377*	0.2240	0.0126	0.7989	0.0148	0.0428	0.0144
NBP[1]402*	0.2058	0.0116	0.7826	0.0145	0.0415	0.0139
NBP[1]428*	0.1959	0.0110	0.7949	0.0147	0.0417	0.0140
NBP[1]454*	0.1955	0.0110	0.8477	0.0157	0.0441	0.0148
NBP[1]480*	0.1981	0.0111	0.9180	0.0170	0.0473	0.0159
NBP[1]505*	0.1920	0.0108	0.9483	0.0176	0.0484	0.0162
NBP[1]531*	0.1852	0.0104	0.9740	0.0180	0.0492	0.0165
NBP[1]557*	0.1784	0.0100	0.9978	0.0185	0.0500	0.0168
NBP[1]582*	0.1706	0.0096	1.0132	0.0188	0.0503	0.0169
NBP[1]608*	0.1643	0.0092	1.0351	0.0192	0.0510	0.0171
NBP[1]634*	0.1611	0.0090	1.0753	0.0199	0.0526	0.0177
NBP[1]659*	0.1586	0.0089	1.1194	0.0207	0.0543	0.0182
NBP[1]685*	0.1641	0.0092	1.2227	0.0227	0.0588	0.0198
NBP[1]711*	0.1715	0.0096	1.3445	0.0249	0.0642	0.0216
NBP[1]736*	0.1697	0.0095	1.3915	0.0258	0.0659	0.0221
NBP[1]762*	0.1653	0.0093	1.4214	0.0263	0.0669	0.0225
NBP[1]788*	0.1585	0.0089	1.4424	0.0267	0.0674	0.0226
NBP[1]825*	0.2655	0.0149	2.5963	0.0481	0.1201	0.0404
NBP[1]873*	0.1830	0.0103	1.9404	0.0359	0.0887	0.0298
NBP[1]926*	0.1437	0.0081	1.6472	0.0305	0.0744	0.0250
NBP[1]978*	0.1474	0.0083	1.8524	0.0343	0.0825	0.0277
NBP[1]1021*	0.0728	0.0041	0.9655	0.0179	0.0426	0.0143
NBP[1]1075*	0.0449	0.0025	0.6310	0.0117	0.0276	0.0093
NBP[1]1123*	0.0417	0.0023	0.6267	0.0116	0.0271	0.0091
NBP[1]1173*	0.0300	0.0017	0.4772	0.0088	0.0205	0.0069
NBP[1]1250*	0.0393	0.0022	0.6767	0.0125	0.0287	0.0096
NBP[1]1339*	0.0364	0.0020	0.6999	0.0130	0.0291	0.0098
NBP[1]1432*	0.0257	0.0014	0.5397	0.0100	0.0221	0.0074
NBP[1]1528*	0.0180	0.0010	0.4082	0.0076	0.0165	0.0055
NBP[1]1637*	0.0127	0.0007	0.3047	0.0056	0.0122	0.0041
NBP[1]1732*	0.0101	0.0006	0.2565	0.0048	0.0101	0.0034
NBP[1]1819*	0.0096	0.0005	0.2561	0.0047	0.0100	0.0034
NBP[1]1913*	0.0000	0.0000	0.0000	0.0000	0.0000	0.0000
Total	17.8012	1.0000	53.9808	1.0000	2.9766	1.0000

Phase Fraction

COMPONENTS	MOLAR FLOW	MOLE FRACTION	MASS FLOW	MASS FRACTION	LIQUID VOLUME FLOW	LIQUID VOLUME FRACTION

* Specified by user.

Material Stream: Pandhi-C (continued)

Fluid Package: Basis-1
Property Package: Peng-Robinson

COMPOSITION

					Phase Fraction	
COMPONENTS	MOLAR FLOW	MOLE FRACTION	MASS FLOW	MASS FRACTION	LIQUID VOLUME FLOW	LIQUID VOLUME FRACTION
Total		1.0000		1.0000		1.0000

* Specified by user.

Petrochemical Engineering Consultants
Karachi, Pakistan

Case Name:	CASE-1A.hsc
Unit Set:	NewUser5e
Date/Time:	Fri Mar 20 18:17:59 2020

Material Stream: Pandhi-Cond.

Fluid Package: Basis-1
Property Package: Peng-Robinson

CONDITIONS

	Overall	Vapour Phase	Liquid Phase	Aqueous Phase
Vapour / Phase Fraction	0.0000	0.0000	1.0000	0.0000
Temperature: (F)	102.7	102.7	102.7	102.7
Pressure: (psig)	1235	1235	1235	1235
Molar Flow (MMSCFD)	0.4828	0.0000	0.4828	0.0000
Mass Flow (tonne/d)	56.32	0.0000	56.32	0.0000
Std Ideal Liq Vol Flow (barrel/day)	501.6	0.0000	501.6	0.0000
Molar Enthalpy (kJ/kgmole)	-2.336e+005	-9.030e+004	-2.336e+005	-2.850e+005
Molar Entropy (kJ/kgmole-C)	203.1	149.1	203.1	57.28
Heat Flow (MMBtu/hr)	-5.325	0.0000	-5.325	0.0000
Liq Vol Flow @Std Cond (barrel/day)	480.0 *	0.0000	480.0	0.0000

PROPERTIES

	Overall	Vapour Phase	Liquid Phase	Aqueous Phase
Molecular Weight	97.59	21.52	97.59	18.03
Molar Density (kgmole/m3)	7.302	4.292	7.302	55.42
Mass Density (kg/m3)	712.6	92.38	712.6	999.4
Act. Volume Flow (barrel/day)	497.1	0.0000	497.1	0.0000
Mass Enthalpy (kJ/kg)	-2394	-4196	-2394	-1.581e+004
Mass Entropy (kJ/kg-C)	2.081	6.928	2.081	3.177
Heat Capacity (kJ/kgmole-C)	206.4	60.21	206.4	77.55
Mass Heat Capacity (kJ/kg-C)	2.115	2.798	2.115	4.301
LHV Molar Basis (Std) (Btu/SCF)	---	---	---	6.516e-004
LHV Mass Basis (Std) (kJ/kg)	---	---	---	3.189e-002
Phase Fraction [Vol. Basis]	---	---	1.000	---
Phase Fraction [Mass Basis]	0.0000	0.0000	1.000	0.0000
Partial Pressure of CO2 (psig)	-14.70	---	---	---
Cost Based on Flow (Cost/s)	0.0000	0.0000	0.0000	0.0000
Act. Gas Flow (ACT_m3/h)	---	---	---	---
Avg. Liq. Density (kgmole/m3)	7.237	16.81	7.237	55.32
Specific Heat (kJ/kgmole-C)	206.4	60.21	206.4	77.55
Std. Gas Flow (STD_m3/h)	568.6	0.0000	568.6	0.0000
Std. Ideal Liq. Mass Density (kg/m3)	706.2	361.7	706.2	997.6
Act. Liq. Flow (barrel/day)	497.1	---	497.1	0.0000
Z Factor	---	0.7728	0.4543	5.985e-002
Watson K	12.20	17.21	12.20	8.487
User Property	---	---	---	---
Partial Pressure of H2S (psig)	-14.70	---	---	---
Cp/(Cp - R)	1.042	1.160	1.042	1.120
Cp/Cv	1.277	1.681	1.277	1.153
Heat of Vap. (kJ/kgmole)	1.562e+005	---	---	---
Kinematic Viscosity (cSt)	2.754	0.1603	2.754	0.6611
Liq. Mass Density (Std. Cond) (kg/m3)	738.0	0.9139	738.0	1015
Liq. Vol. Flow (Std. Cond) (barrel/day)	480.0	0.0000	480.0	0.0000
Liquid Fraction	1.000	0.0000	1.000	1.000
Molar Volume (m3/kgmole)	0.1369	0.2330	0.1369	1.804e-002
Mass Heat of Vap. (kJ/kg)	1601	---	---	---
Phase Fraction [Molar Basis]	0.0000	0.0000	1.0000	0.0000
Surface Tension (dyne/cm)	11.02	---	11.02	69.57
Thermal Conductivity (W/m-K)	8.920e-002	4.125e-002	8.920e-002	0.6306
Viscosity (cP)	1.963	1.481e-002	1.963	0.6607
Cv (Semi-Ideal) (kJ/kgmole-C)	198.1	51.90	198.1	69.24
Mass Cv (Semi-Ideal) (kJ/kg-C)	2.030	2.411	2.030	3.840
Cv (kJ/kgmole-C)	161.6	35.81	161.6	67.25
Mass Cv (kJ/kg-C)	1.656	1.664	1.656	3.729
Cv (Ent. Method) (kJ/kgmole-C)	172.4	---	172.4	66.54
Mass Cv (Ent. Method) (kJ/kg-C)	1.766	---	1.766	3.690
Cp/Cv (Ent. Method)	1.198	---	1.198	1.166

Licensed to: PETROCHEMICAL ENGINEERIN
* Specified by user.

Material Stream: Pandhi-Cond. (continued)

Fluid Package: Basis-1
Property Package: Peng-Robinson

PROPERTIES

	Overall	Vapour Phase	Liquid Phase	Aqueous Phase
Reid VP at 37.8 C (psig)	254.3	---	254.3	---
True VP at 37.8 C (psig)	1222	2761	1222	118.6
Liq. Vol. Flow - Sum(Std. Cond) (barrel/day)	480.0	0.0000	480.0	0.0000
HHV Molar Basis (Std) (Btu/SCF)	---	---	---	46.43
HHV Mass Basis (Std) (kJ/kg)	---	---	---	2273
CO2 Loading	---	---	---	---
CO2 App ML Con (kgmole/m3)	0.1767	---	0.1767	---
CO2 App WT Con (kgmol/kg)	2.480e-004	---	2.480e-004	---
Phase Fraction [Act. Vol. Basis]	0.0000	0.0000	1.000	0.0000
Mass Exergy (kJ/kg)	55.33	---	---	---
Viscosity Index	14.43	---	---	---
Ideal Gas Cp/Cv	1.055	1.243	1.055	1.328
Ideal Gas Cp (kJ/kgmole-C)	160.8	42.57	160.8	33.66
Mass Ideal Gas Cp (kJ/kg-C)	1.648	1.978	1.648	1.867
Bubble Point Pressure (psig)	1235	---	---	---

COMPOSITION

Overall Phase

Vapour Fraction 0.0000

COMPONENTS	MOLAR FLOW (kgmole/h)	MOLE FRACTION	MASS FLOW (tonne/d)	MASS FRACTION	LIQUID VOLUME FLOW (m3/h)	LIQUID VOLUME FRACTION
Methane	6.2665	0.2606	2.4128	0.0428	0.3358	0.1011
Ethane	2.3628	0.0983	1.7052	0.0303	0.1998	0.0601
Propane	2.4953	0.1038	2.6409	0.0469	0.2172	0.0654
i-Butane	0.5210	0.0217	0.7268	0.0129	0.0539	0.0162
n-Butane	1.1873	0.0494	1.6562	0.0294	0.1183	0.0356
i-Pentane	0.3659	0.0152	0.6336	0.0113	0.0423	0.0127
n-Pentane	0.4575	0.0190	0.7921	0.0141	0.0524	0.0158
n-Hexane	0.9607	0.0399	1.9870	0.0353	0.1249	0.0376
Nitrogen	0.0878	0.0037	0.0590	0.0010	0.0031	0.0009
CO2	0.5820	0.0242	0.6148	0.0109	0.0310	0.0093
H2S	0.0001	0.0000	0.0001	0.0000	0.0000	0.0000
H2O	0.0222	0.0009	0.0096	0.0002	0.0004	0.0001
NBP[1]95*	0.1366	0.0057	0.2227	0.0040	0.0136	0.0041
NBP[1]121*	0.1858	0.0077	0.3249	0.0058	0.0197	0.0059
NBP[1]147*	0.2705	0.0112	0.5207	0.0092	0.0310	0.0093
NBP[1]171*	0.5724	0.0238	1.2045	0.0214	0.0705	0.0212
NBP[1]195*	0.8153	0.0339	1.8311	0.0325	0.1059	0.0319
NBP[1]222*	0.6565	0.0273	1.5857	0.0282	0.0906	0.0273
NBP[1]248*	0.5780	0.0240	1.5012	0.0267	0.0848	0.0255
NBP[1]273*	0.4853	0.0202	1.3479	0.0239	0.0752	0.0226
NBP[1]299*	0.3909	0.0163	1.1576	0.0206	0.0639	0.0192
NBP[1]325*	0.2893	0.0120	0.9102	0.0162	0.0498	0.0150
NBP[1]351*	0.2384	0.0099	0.7971	0.0142	0.0432	0.0130
NBP[1]377*	0.2205	0.0092	0.7862	0.0140	0.0421	0.0127
NBP[1]402*	0.2036	0.0085	0.7744	0.0137	0.0411	0.0124
NBP[1]428*	0.1946	0.0081	0.7896	0.0140	0.0415	0.0125
NBP[1]454*	0.1947	0.0081	0.8441	0.0150	0.0439	0.0132
NBP[1]480*	0.1976	0.0082	0.9156	0.0163	0.0471	0.0142
NBP[1]505*	0.1917	0.0080	0.9468	0.0168	0.0483	0.0145
NBP[1]531*	0.1851	0.0077	0.9731	0.0173	0.0492	0.0148
NBP[1]557*	0.1783	0.0074	0.9973	0.0177	0.0500	0.0150
NBP[1]582*	0.1705	0.0071	1.0129	0.0180	0.0503	0.0151
NBP[1]608*	0.1643	0.0068	1.0349	0.0184	0.0510	0.0153
NBP[1]634*	0.1611	0.0067	1.0752	0.0191	0.0526	0.0158
NBP[1]659*	0.1586	0.0066	1.1194	0.0199	0.0543	0.0163
NBP[1]685*	0.1641	0.0068	1.2227	0.0217	0.0588	0.0177

* Specified by user.

Material Stream: Pandhi-Cond. (continued)

Fluid Package: Basis-1
Property Package: Peng-Robinson

COMPOSITION

Overall Phase (continued)

Vapour Fraction 0.0000

COMPONENTS	MOLAR FLOW (kgmole/h)	MOLE FRACTION	MASS FLOW (tonne/d)	MASS FRACTION	LIQUID VOLUME FLOW (m3/h)	LIQUID VOLUME FRACTION
NBP[1]711*	0.1715	0.0071	1.3445	0.0239	0.0642	0.0193
NBP[1]736*	0.1697	0.0071	1.3915	0.0247	0.0659	0.0198
NBP[1]762*	0.1653	0.0069	1.4214	0.0252	0.0669	0.0201
NBP[1]788*	0.1585	0.0066	1.4424	0.0256	0.0674	0.0203
NBP[1]825*	0.2655	0.0110	2.5963	0.0461	0.1201	0.0361
NBP[1]873*	0.1830	0.0076	1.9404	0.0345	0.0887	0.0267
NBP[1]926*	0.1437	0.0060	1.6472	0.0292	0.0744	0.0224
NBP[1]978*	0.1474	0.0061	1.8524	0.0329	0.0825	0.0248
NBP[1]1021*	0.0728	0.0030	0.9655	0.0171	0.0426	0.0128
NBP[1]1075*	0.0449	0.0019	0.6310	0.0112	0.0276	0.0083
NBP[1]1123*	0.0417	0.0017	0.6267	0.0111	0.0271	0.0082
NBP[1]1173*	0.0300	0.0012	0.4772	0.0085	0.0205	0.0062
NBP[1]1250*	0.0393	0.0016	0.6767	0.0120	0.0287	0.0086
NBP[1]1339*	0.0364	0.0015	0.6999	0.0124	0.0291	0.0088
NBP[1]1432*	0.0257	0.0011	0.5397	0.0096	0.0221	0.0067
NBP[1]1528*	0.0180	0.0007	0.4082	0.0072	0.0165	0.0050
NBP[1]1637*	0.0127	0.0005	0.3047	0.0054	0.0122	0.0037
NBP[1]1732*	0.0088	0.0004	0.2221	0.0039	0.0088	0.0026
NBP[1]1819*	0.0000	0.0000	0.0000	0.0000	0.0000	0.0000
NBP[1]1913*	0.0000	0.0000	0.0000	0.0000	0.0000	0.0000
Total	24.0478	1.0000	56.3217	1.0000	3.3229	1.0000

Vapour Phase

Phase Fraction 0.0000

COMPONENTS	MOLAR FLOW (kgmole/h)	MOLE FRACTION	MASS FLOW (tonne/d)	MASS FRACTION	LIQUID VOLUME FLOW (m3/h)	LIQUID VOLUME FRACTION
Methane	0.0000	0.7673	0.0000	0.5719	0.0000	0.6910
Ethane	0.0000	0.1010	0.0000	0.1412	0.0000	0.1436
Propane	0.0000	0.0488	0.0000	0.1000	0.0000	0.0714
i-Butane	0.0000	0.0058	0.0000	0.0156	0.0000	0.0100
n-Butane	0.0000	0.0106	0.0000	0.0285	0.0000	0.0177
i-Pentane	0.0000	0.0018	0.0000	0.0062	0.0000	0.0036
n-Pentane	0.0000	0.0019	0.0000	0.0064	0.0000	0.0037
n-Hexane	0.0000	0.0019	0.0000	0.0078	0.0000	0.0043
Nitrogen	0.0000	0.0211	0.0000	0.0274	0.0000	0.0123
CO2	0.0000	0.0335	0.0000	0.0685	0.0000	0.0300
H2S	0.0000	0.0000	0.0000	0.0000	0.0000	0.0000
H2O	0.0000	0.0012	0.0000	0.0010	0.0000	0.0004
NBP[1]95*	0.0000	0.0006	0.0000	0.0018	0.0000	0.0010
NBP[1]121*	0.0000	0.0006	0.0000	0.0020	0.0000	0.0010
NBP[1]147*	0.0000	0.0006	0.0000	0.0023	0.0000	0.0012
NBP[1]171*	0.0000	0.0010	0.0000	0.0039	0.0000	0.0020
NBP[1]195*	0.0000	0.0010	0.0000	0.0043	0.0000	0.0022
NBP[1]222*	0.0000	0.0005	0.0000	0.0026	0.0000	0.0013
NBP[1]248*	0.0000	0.0003	0.0000	0.0017	0.0000	0.0008
NBP[1]273*	0.0000	0.0002	0.0000	0.0010	0.0000	0.0005
NBP[1]299*	0.0000	0.0001	0.0000	0.0006	0.0000	0.0003
NBP[1]325*	0.0000	0.0001	0.0000	0.0003	0.0000	0.0001
NBP[1]351*	0.0000	0.0000	0.0000	0.0002	0.0000	0.0001
NBP[1]377*	0.0000	0.0000	0.0000	0.0001	0.0000	0.0001
NBP[1]402*	0.0000	0.0000	0.0000	0.0001	0.0000	0.0000
NBP[1]428*	0.0000	0.0000	0.0000	0.0000	0.0000	0.0000
NBP[1]454*	0.0000	0.0000	0.0000	0.0000	0.0000	0.0000
NBP[1]480*	0.0000	0.0000	0.0000	0.0000	0.0000	0.0000
NBP[1]505*	0.0000	0.0000	0.0000	0.0000	0.0000	0.0000

* Specified by user.

Material Stream: Pandhi-Cond. (continued)

Fluid Package: Basis-1
Property Package: Peng-Robinson

COMPOSITION

Vapour Phase (continued)

Phase Fraction 0.0000

COMPONENTS	MOLAR FLOW (kgmole/h)	MOLE FRACTION	MASS FLOW (tonne/d)	MASS FRACTION	LIQUID VOLUME FLOW (m3/h)	LIQUID VOLUME FRACTION
NBP[1]531*	0.0000	0.0000	0.0000	0.0000	0.0000	0.0000
NBP[1]557*	0.0000	0.0000	0.0000	0.0000	0.0000	0.0000
NBP[1]582*	0.0000	0.0000	0.0000	0.0000	0.0000	0.0000
NBP[1]608*	0.0000	0.0000	0.0000	0.0000	0.0000	0.0000
NBP[1]634*	0.0000	0.0000	0.0000	0.0000	0.0000	0.0000
NBP[1]659*	0.0000	0.0000	0.0000	0.0000	0.0000	0.0000
NBP[1]685*	0.0000	0.0000	0.0000	0.0000	0.0000	0.0000
NBP[1]711*	0.0000	0.0000	0.0000	0.0000	0.0000	0.0000
NBP[1]736*	0.0000	0.0000	0.0000	0.0000	0.0000	0.0000
NBP[1]762*	0.0000	0.0000	0.0000	0.0000	0.0000	0.0000
NBP[1]788*	0.0000	0.0000	0.0000	0.0000	0.0000	0.0000
NBP[1]825*	0.0000	0.0000	0.0000	0.0000	0.0000	0.0000
NBP[1]873*	0.0000	0.0000	0.0000	0.0000	0.0000	0.0000
NBP[1]926*	0.0000	0.0000	0.0000	0.0000	0.0000	0.0000
NBP[1]978*	0.0000	0.0000	0.0000	0.0000	0.0000	0.0000
NBP[1]1021*	0.0000	0.0000	0.0000	0.0000	0.0000	0.0000
NBP[1]1075*	0.0000	0.0000	0.0000	0.0000	0.0000	0.0000
NBP[1]1123*	0.0000	0.0000	0.0000	0.0000	0.0000	0.0000
NBP[1]1173*	0.0000	0.0000	0.0000	0.0000	0.0000	0.0000
NBP[1]1250*	0.0000	0.0000	0.0000	0.0000	0.0000	0.0000
NBP[1]1339*	0.0000	0.0000	0.0000	0.0000	0.0000	0.0000
NBP[1]1432*	0.0000	0.0000	0.0000	0.0000	0.0000	0.0000
NBP[1]1528*	0.0000	0.0000	0.0000	0.0000	0.0000	0.0000
NBP[1]1637*	0.0000	0.0000	0.0000	0.0000	0.0000	0.0000
NBP[1]1732*	0.0000	0.0000	0.0000	0.0003	0.0000	0.0001
NBP[1]1819*	0.0000	0.0000	0.0000	0.0019	0.0000	0.0006
NBP[1]1913*	0.0000	0.0000	0.0000	0.0023	0.0000	0.0008
Total	0.0000	1.0000	0.0000	1.0000	0.0000	1.0000

Liquid Phase

Phase Fraction 1.000

COMPONENTS	MOLAR FLOW (kgmole/h)	MOLE FRACTION	MASS FLOW (tonne/d)	MASS FRACTION	LIQUID VOLUME FLOW (m3/h)	LIQUID VOLUME FRACTION
Methane	6.2665	0.2606	2.4128	0.0428	0.3358	0.1011
Ethane	2.3628	0.0983	1.7052	0.0303	0.1998	0.0601
Propane	2.4953	0.1038	2.6409	0.0469	0.2172	0.0654
i-Butane	0.5210	0.0217	0.7268	0.0129	0.0539	0.0162
n-Butane	1.1873	0.0494	1.6562	0.0294	0.1183	0.0356
i-Pentane	0.3659	0.0152	0.6336	0.0113	0.0423	0.0127
n-Pentane	0.4575	0.0190	0.7921	0.0141	0.0524	0.0158
n-Hexane	0.9607	0.0399	1.9870	0.0353	0.1249	0.0376
Nitrogen	0.0878	0.0037	0.0590	0.0010	0.0031	0.0009
CO2	0.5820	0.0242	0.6148	0.0109	0.0310	0.0093
H2S	0.0001	0.0000	0.0001	0.0000	0.0000	0.0000
H2O	0.0222	0.0009	0.0096	0.0002	0.0004	0.0001
NBP[1]95*	0.1366	0.0057	0.2227	0.0040	0.0136	0.0041
NBP[1]121*	0.1858	0.0077	0.3249	0.0058	0.0197	0.0059
NBP[1]147*	0.2705	0.0112	0.5207	0.0092	0.0310	0.0093
NBP[1]171*	0.5724	0.0238	1.2045	0.0214	0.0705	0.0212
NBP[1]195*	0.8153	0.0339	1.8311	0.0325	0.1059	0.0319
NBP[1]222*	0.6565	0.0273	1.5857	0.0282	0.0906	0.0273
NBP[1]248*	0.5780	0.0240	1.5012	0.0267	0.0848	0.0255
NBP[1]273*	0.4853	0.0202	1.3479	0.0239	0.0752	0.0226
NBP[1]299*	0.3909	0.0163	1.1576	0.0206	0.0639	0.0192
NBP[1]325*	0.2893	0.0120	0.9102	0.0162	0.0498	0.0150

* Specified by user.

Material Stream: Pandhi-Cond. (continued)

Fluid Package: Basis-1
Property Package: Peng-Robinson

COMPOSITION

Liquid Phase (continued)

Phase Fraction 1.000

COMPONENTS	MOLAR FLOW (kgmole/h)	MOLE FRACTION	MASS FLOW (tonne/d)	MASS FRACTION	LIQUID VOLUME FLOW (m3/h)	LIQUID VOLUME FRACTION
NBP[1]351*	0.2384	0.0099	0.7971	0.0142	0.0432	0.0130
NBP[1]377*	0.2205	0.0092	0.7862	0.0140	0.0421	0.0127
NBP[1]402*	0.2036	0.0085	0.7744	0.0137	0.0411	0.0124
NBP[1]428*	0.1946	0.0081	0.7896	0.0140	0.0415	0.0125
NBP[1]454*	0.1947	0.0081	0.8441	0.0150	0.0439	0.0132
NBP[1]480*	0.1976	0.0082	0.9156	0.0163	0.0471	0.0142
NBP[1]505*	0.1917	0.0080	0.9468	0.0168	0.0483	0.0145
NBP[1]531*	0.1851	0.0077	0.9731	0.0173	0.0492	0.0148
NBP[1]557*	0.1783	0.0074	0.9973	0.0177	0.0500	0.0150
NBP[1]582*	0.1705	0.0071	1.0129	0.0180	0.0503	0.0151
NBP[1]608*	0.1643	0.0068	1.0349	0.0184	0.0510	0.0153
NBP[1]634*	0.1611	0.0067	1.0752	0.0191	0.0526	0.0158
NBP[1]659*	0.1586	0.0066	1.1194	0.0199	0.0543	0.0163
NBP[1]685*	0.1641	0.0068	1.2227	0.0217	0.0588	0.0177
NBP[1]711*	0.1715	0.0071	1.3445	0.0239	0.0642	0.0193
NBP[1]736*	0.1697	0.0071	1.3915	0.0247	0.0659	0.0198
NBP[1]762*	0.1653	0.0069	1.4214	0.0252	0.0669	0.0201
NBP[1]788*	0.1585	0.0066	1.4424	0.0256	0.0674	0.0203
NBP[1]825*	0.2655	0.0110	2.5963	0.0461	0.1201	0.0361
NBP[1]873*	0.1830	0.0076	1.9404	0.0345	0.0887	0.0267
NBP[1]926*	0.1437	0.0060	1.6472	0.0292	0.0744	0.0224
NBP[1]978*	0.1474	0.0061	1.8524	0.0329	0.0825	0.0248
NBP[1]1021*	0.0728	0.0030	0.9655	0.0171	0.0426	0.0128
NBP[1]1075*	0.0449	0.0019	0.6310	0.0112	0.0276	0.0083
NBP[1]1123*	0.0417	0.0017	0.6267	0.0111	0.0271	0.0082
NBP[1]1173*	0.0300	0.0012	0.4772	0.0085	0.0205	0.0062
NBP[1]1250*	0.0393	0.0016	0.6767	0.0120	0.0287	0.0086
NBP[1]1339*	0.0364	0.0015	0.6999	0.0124	0.0291	0.0088
NBP[1]1432*	0.0257	0.0011	0.5397	0.0096	0.0221	0.0067
NBP[1]1528*	0.0180	0.0007	0.4082	0.0072	0.0165	0.0050
NBP[1]1637*	0.0127	0.0005	0.3047	0.0054	0.0122	0.0037
NBP[1]1732*	0.0088	0.0004	0.2221	0.0039	0.0088	0.0026
NBP[1]1819*	0.0000	0.0000	0.0000	0.0000	0.0000	0.0000
NBP[1]1913*	0.0000	0.0000	0.0000	0.0000	0.0000	0.0000
Total	24.0478	1.0000	56.3217	1.0000	3.3229	1.0000

Phase Fraction

COMPONENTS	MOLAR FLOW	MOLE FRACTION	MASS FLOW	MASS FRACTION	LIQUID VOLUME FLOW	LIQUID VOLUME FRACTION

* Specified by user.

Material Stream: Pandhi-Cond. (continued)

Fluid Package: Basis-1
Property Package: Peng-Robinson

COMPOSITION

						Phase Fraction
COMPONENTS	MOLAR FLOW	MOLE FRACTION	MASS FLOW	MASS FRACTION	LIQUID VOLUME FLOW	LIQUID VOLUME FRACTION
Total		1.0000		1.0000		1.0000

Material Stream: Pandhi-Gas

Fluid Package: Basis-1
Property Package: Peng-Robinson

CONDITIONS

		Overall	Vapour Phase	Liquid Phase	Aqueous Phase
Vapour / Phase Fraction		1.0000	1.0000	0.0000	0.0000
Temperature:	(F)	84.79	84.79	84.79	84.79
Pressure:	(psig)	445.0	445.0	445.0	445.0
Molar Flow	(MMSCFD)	5.381	5.381	0.0000	0.0000
Mass Flow	(tonne/d)	137.6	137.6	0.0000	0.0000
Std Ideal Liq Vol Flow	(barrel/day)	2403	2403	0.0000	0.0000

Licensed to: PETROCHEMICAL ENGINEERIN
* Specified by user.

Material Stream: Pandhi-Gas (continued)

Fluid Package: Basis-1
Property Package: Peng-Robinson

CONDITIONS

	Overall	Vapour Phase	Liquid Phase	Aqueous Phase
Molar Enthalpy (kJ/kgmole)	-8.928e+004	-8.928e+004	-2.875e+005	-2.859e+005
Molar Entropy (kJ/kgmole-C)	159.3	159.3	218.7	54.83
Heat Flow (MMBtu/hr)	-22.68	-22.68	0.0000	0.0000
Liq Vol Flow @Std Cond (barrel/day)	9.528e+005 *	9.528e+005	0.0000	0.0000

PROPERTIES

	Overall	Vapour Phase	Liquid Phase	Aqueous Phase
Molecular Weight	21.39	21.39	126.4	18.03
Molar Density (kgmole/m3)	1.408	1.408	6.079	55.76
Mass Density (kg/m3)	30.10	30.10	768.1	1005
Act. Volume Flow (barrel/day)	2.874e+004	2.874e+004	0.0000	0.0000
Mass Enthalpy (kJ/kg)	-4175	-4175	-2275	-1.586e+004
Mass Entropy (kJ/kg-C)	7.448	7.448	1.731	3.042
Heat Capacity (kJ/kgmole-C)	47.13	47.13	253.8	77.64
Mass Heat Capacity (kJ/kg-C)	2.204	2.204	2.009	4.307
LHV Molar Basis (Std) (Btu/SCF)	---	---	---	1.809e-004
LHV Mass Basis (Std) (kJ/kg)	---	---	---	8.858e-003
Phase Fraction [Vol. Basis]	1.000	1.000	---	---
Phase Fraction [Mass Basis]	1.000	1.000	0.0000	0.0000
Partial Pressure of CO2 (psig)	0.9692	---	---	---
Cost Based on Flow (Cost/s)	0.0000	0.0000	0.0000	0.0000
Act. Gas Flow (ACT_m3/h)	190.4	190.4	---	---
Avg. Liq. Density (kgmole/m3)	16.84	16.84	5.980	55.35
Specific Heat (kJ/kgmole-C)	47.13	47.13	253.8	77.64
Std. Gas Flow (STD_m3/h)	6337	6337	0.0000	0.0000
Std. Ideal Liq. Mass Density (kg/m3)	360.1	360.1	755.6	997.8
Act. Liq. Flow (barrel/day)	0.0000	---	---	0.0000
Z Factor	---	0.8953	0.2073	2.260e-002
Watson K	17.28	17.28	11.99	8.497
User Property	---	---	---	---
Partial Pressure of H2S (psig)	-14.70	---	---	---
Cp/(Cp - R)	1.214	1.214	1.034	1.120
Cp/Cv	1.388	1.388	1.034	1.149
Heat of Vap. (kJ/kgmole)	1.879e+004	---	---	---
Kinematic Viscosity (cSt)	0.3993	0.3993	12.25	0.8047
Liq. Mass Density (Std. Cond) (kg/m3)	0.9081	0.9081	781.8	1015
Liq. Vol. Flow (Std. Cond) (barrel/day)	9.528e+005	9.528e+005	0.0000	0.0000
Liquid Fraction	0.0000	0.0000	1.000	1.000
Molar Volume (m3/kgmole)	0.7104	0.7104	0.1645	1.793e-002
Mass Heat of Vap. (kJ/kg)	878.6	---	---	---
Phase Fraction [Molar Basis]	1.0000	1.0000	0.0000	0.0000
Surface Tension (dyne/cm)	---	---	15.96	71.32
Thermal Conductivity (W/m-K)	3.302e-002	3.302e-002	0.1006	0.6173
Viscosity (cP)	1.202e-002	1.202e-002	9.409	0.8089
Cv (Semi-Ideal) (kJ/kgmole-C)	38.81	38.81	245.5	69.33
Mass Cv (Semi-Ideal) (kJ/kg-C)	1.815	1.815	1.943	3.846
Cv (kJ/kgmole-C)	33.96	33.96	245.5	67.56
Mass Cv (kJ/kg-C)	1.588	1.588	1.943	3.748
Cv (Ent. Method) (kJ/kgmole-C)	-508.4	-3697	---	66.88
Mass Cv (Ent. Method) (kJ/kg-C)	-23.77	-172.9	---	3.711
Cp/Cv (Ent. Method)	-9.270e-002	-1.275e-002	---	1.161
Reid VP at 37.8 C (psig)	---	---	97.87	---
True VP at 37.8 C (psig)	3607	3607	475.9	17.11
Liq. Vol. Flow - Sum(Std. Cond) (barrel/day)	9.528e+005	9.528e+005	0.0000	0.0000
HHV Molar Basis (Std) (Btu/SCF)	---	---	---	46.45
HHV Mass Basis (Std) (kJ/kg)	---	---	---	2274
CO2 Loading	---	---	---	---

* Specified by user.

Material Stream: Pandhi-Gas (continued)

Fluid Package: Basis-1
Property Package: Peng-Robinson

PROPERTIES

	Overall	Vapour Phase	Liquid Phase	Aqueous Phase
CO2 App ML Con (kgmole/m3)	---	---	---	---
CO2 App WT Con (kgmol/kg)	---	---	---	---
Phase Fraction [Act. Vol. Basis]	1.000	1.000	0.0000	0.0000
Mass Exergy (kJ/kg)	387.1	---	---	---
Viscosity Index	-58.95	---	---	---
Ideal Gas Cp/Cv	1.249	1.249	1.043	1.329
Ideal Gas Cp (kJ/kgmole-C)	41.72	41.72	200.0	33.60
Mass Ideal Gas Cp (kJ/kg-C)	1.951	1.951	1.583	1.864
Bubble Point Pressure (psig)	4658	---	---	---

COMPOSITION

Overall Phase

Vapour Fraction 1.0000

COMPONENTS	MOLAR FLOW (kgmole/h)	MOLE FRACTION	MASS FLOW (tonne/d)	MASS FRACTION	LIQUID VOLUME FLOW (m3/h)	LIQUID VOLUME FRACTION
Methane	205.0219	0.7649	78.9395	0.5738	10.9860	0.6901
Ethane	27.6541	0.1032	19.9573	0.1451	2.3379	0.1469
Propane	13.5902	0.0507	14.3829	0.1046	1.1828	0.0743
i-Butane	1.5866	0.0059	2.2133	0.0161	0.1641	0.0103
n-Butane	2.8841	0.0108	4.0233	0.0292	0.2874	0.0181
i-Pentane	0.4635	0.0017	0.8025	0.0058	0.0536	0.0034
n-Pentane	0.4652	0.0017	0.8056	0.0059	0.0533	0.0033
n-Hexane	0.3694	0.0014	0.7639	0.0056	0.0480	0.0030
Nitrogen	5.5752	0.0208	3.7483	0.0272	0.1937	0.0122
CO2	9.1335	0.0341	9.6471	0.0701	0.4870	0.0306
H2S	0.0005	0.0000	0.0004	0.0000	0.0000	0.0000
H2O	0.3945	0.0015	0.1706	0.0012	0.0071	0.0004
NBP[1]95*	0.1425	0.0005	0.2323	0.0017	0.0142	0.0009
NBP[1]121*	0.1318	0.0005	0.2305	0.0017	0.0139	0.0009
NBP[1]147*	0.1254	0.0005	0.2414	0.0018	0.0144	0.0009
NBP[1]171*	0.1733	0.0006	0.3646	0.0027	0.0213	0.0013
NBP[1]195*	0.1579	0.0006	0.3546	0.0026	0.0205	0.0013
NBP[1]222*	0.0732	0.0003	0.1768	0.0013	0.0101	0.0006
NBP[1]248*	0.0375	0.0001	0.0974	0.0007	0.0055	0.0003
NBP[1]273*	0.0181	0.0001	0.0503	0.0004	0.0028	0.0002
NBP[1]299*	0.0083	0.0000	0.0245	0.0002	0.0014	0.0001
NBP[1]325*	0.0033	0.0000	0.0105	0.0001	0.0006	0.0000
NBP[1]351*	0.0015	0.0000	0.0050	0.0000	0.0003	0.0000
NBP[1]377*	0.0007	0.0000	0.0025	0.0000	0.0001	0.0000
NBP[1]402*	0.0003	0.0000	0.0013	0.0000	0.0001	0.0000
NBP[1]428*	0.0002	0.0000	0.0007	0.0000	0.0000	0.0000
NBP[1]454*	0.0001	0.0000	0.0003	0.0000	0.0000	0.0000
NBP[1]480*	0.0000	0.0000	0.0002	0.0000	0.0000	0.0000
NBP[1]505*	0.0000	0.0000	0.0001	0.0000	0.0000	0.0000
NBP[1]531*	0.0000	0.0000	0.0000	0.0000	0.0000	0.0000
NBP[1]557*	0.0000	0.0000	0.0000	0.0000	0.0000	0.0000
NBP[1]582*	0.0000	0.0000	0.0000	0.0000	0.0000	0.0000
NBP[1]608*	0.0000	0.0000	0.0000	0.0000	0.0000	0.0000
NBP[1]634*	0.0000	0.0000	0.0000	0.0000	0.0000	0.0000
NBP[1]659*	0.0000	0.0000	0.0000	0.0000	0.0000	0.0000
NBP[1]685*	0.0000	0.0000	0.0000	0.0000	0.0000	0.0000
NBP[1]711*	0.0000	0.0000	0.0000	0.0000	0.0000	0.0000
NBP[1]736*	0.0000	0.0000	0.0000	0.0000	0.0000	0.0000
NBP[1]762*	0.0000	0.0000	0.0000	0.0000	0.0000	0.0000
NBP[1]788*	0.0000	0.0000	0.0000	0.0000	0.0000	0.0000
NBP[1]825*	0.0000	0.0000	0.0000	0.0000	0.0000	0.0000
NBP[1]873*	0.0000	0.0000	0.0000	0.0000	0.0000	0.0000

* Specified by user.

Material Stream: Pandhi-Gas (continued)

Fluid Package: Basis-1
Property Package: Peng-Robinson

COMPOSITION

Overall Phase (continued)

Vapour Fraction 1.0000

COMPONENTS	MOLAR FLOW (kgmole/h)	MOLE FRACTION	MASS FLOW (tonne/d)	MASS FRACTION	LIQUID VOLUME FLOW (m3/h)	LIQUID VOLUME FRACTION
NBP[1]926*	0.0000	0.0000	0.0000	0.0000	0.0000	0.0000
NBP[1]978*	0.0000	0.0000	0.0000	0.0000	0.0000	0.0000
NBP[1]1021*	0.0000	0.0000	0.0000	0.0000	0.0000	0.0000
NBP[1]1075*	0.0000	0.0000	0.0000	0.0000	0.0000	0.0000
NBP[1]1123*	0.0000	0.0000	0.0000	0.0000	0.0000	0.0000
NBP[1]1173*	0.0000	0.0000	0.0000	0.0000	0.0000	0.0000
NBP[1]1250*	0.0000	0.0000	0.0000	0.0000	0.0000	0.0000
NBP[1]1339*	0.0000	0.0000	0.0000	0.0000	0.0000	0.0000
NBP[1]1432*	0.0000	0.0000	0.0000	0.0000	0.0000	0.0000
NBP[1]1528*	0.0000	0.0000	0.0000	0.0000	0.0000	0.0000
NBP[1]1637*	0.0000	0.0000	0.0000	0.0000	0.0000	0.0000
NBP[1]1732*	0.0000	0.0000	0.0000	0.0000	0.0000	0.0000
NBP[1]1819*	0.0001	0.0000	0.0029	0.0000	0.0001	0.0000
NBP[1]1913*	0.0112	0.0000	0.3148	0.0023	0.0121	0.0008
Total	268.0242	1.0000	137.5655	1.0000	15.9186	1.0000

Vapour Phase

Phase Fraction 1.000

COMPONENTS	MOLAR FLOW (kgmole/h)	MOLE FRACTION	MASS FLOW (tonne/d)	MASS FRACTION	LIQUID VOLUME FLOW (m3/h)	LIQUID VOLUME FRACTION
Methane	205.0219	0.7649	78.9395	0.5738	10.9860	0.6901
Ethane	27.6541	0.1032	19.9573	0.1451	2.3379	0.1469
Propane	13.5902	0.0507	14.3829	0.1046	1.1828	0.0743
i-Butane	1.5866	0.0059	2.2133	0.0161	0.1641	0.0103
n-Butane	2.8841	0.0108	4.0233	0.0292	0.2874	0.0181
i-Pentane	0.4635	0.0017	0.8025	0.0058	0.0536	0.0034
n-Pentane	0.4652	0.0017	0.8056	0.0059	0.0533	0.0033
n-Hexane	0.3694	0.0014	0.7639	0.0056	0.0480	0.0030
Nitrogen	5.5752	0.0208	3.7483	0.0272	0.1937	0.0122
CO2	9.1335	0.0341	9.6471	0.0701	0.4870	0.0306
H2S	0.0005	0.0000	0.0004	0.0000	0.0000	0.0000
H2O	0.3945	0.0015	0.1706	0.0012	0.0071	0.0004
NBP[1]95*	0.1425	0.0005	0.2323	0.0017	0.0142	0.0009
NBP[1]121*	0.1318	0.0005	0.2305	0.0017	0.0139	0.0009
NBP[1]147*	0.1254	0.0005	0.2414	0.0018	0.0144	0.0009
NBP[1]171*	0.1733	0.0006	0.3646	0.0027	0.0213	0.0013
NBP[1]195*	0.1579	0.0006	0.3546	0.0026	0.0205	0.0013
NBP[1]222*	0.0732	0.0003	0.1768	0.0013	0.0101	0.0006
NBP[1]248*	0.0375	0.0001	0.0974	0.0007	0.0055	0.0003
NBP[1]273*	0.0181	0.0001	0.0503	0.0004	0.0028	0.0002
NBP[1]299*	0.0083	0.0000	0.0245	0.0002	0.0014	0.0001
NBP[1]325*	0.0033	0.0000	0.0105	0.0001	0.0006	0.0000
NBP[1]351*	0.0015	0.0000	0.0050	0.0000	0.0003	0.0000
NBP[1]377*	0.0007	0.0000	0.0025	0.0000	0.0001	0.0000
NBP[1]402*	0.0003	0.0000	0.0013	0.0000	0.0001	0.0000
NBP[1]428*	0.0002	0.0000	0.0007	0.0000	0.0000	0.0000
NBP[1]454*	0.0001	0.0000	0.0003	0.0000	0.0000	0.0000
NBP[1]480*	0.0000	0.0000	0.0002	0.0000	0.0000	0.0000
NBP[1]505*	0.0000	0.0000	0.0001	0.0000	0.0000	0.0000
NBP[1]531*	0.0000	0.0000	0.0000	0.0000	0.0000	0.0000
NBP[1]557*	0.0000	0.0000	0.0000	0.0000	0.0000	0.0000
NBP[1]582*	0.0000	0.0000	0.0000	0.0000	0.0000	0.0000
NBP[1]608*	0.0000	0.0000	0.0000	0.0000	0.0000	0.0000
NBP[1]634*	0.0000	0.0000	0.0000	0.0000	0.0000	0.0000
NBP[1]659*	0.0000	0.0000	0.0000	0.0000	0.0000	0.0000

* Specified by user.

Material Stream: Pandhi-Gas (continued)

Fluid Package: Basis-1
Property Package: Peng-Robinson

COMPOSITION

Vapour Phase (continued)

Phase Fraction 1.000

COMPONENTS	MOLAR FLOW (kgmole/h)	MOLE FRACTION	MASS FLOW (tonne/d)	MASS FRACTION	LIQUID VOLUME FLOW (m3/h)	LIQUID VOLUME FRACTION
NBP[1]685*	0.0000	0.0000	0.0000	0.0000	0.0000	0.0000
NBP[1]711*	0.0000	0.0000	0.0000	0.0000	0.0000	0.0000
NBP[1]736*	0.0000	0.0000	0.0000	0.0000	0.0000	0.0000
NBP[1]762*	0.0000	0.0000	0.0000	0.0000	0.0000	0.0000
NBP[1]788*	0.0000	0.0000	0.0000	0.0000	0.0000	0.0000
NBP[1]825*	0.0000	0.0000	0.0000	0.0000	0.0000	0.0000
NBP[1]873*	0.0000	0.0000	0.0000	0.0000	0.0000	0.0000
NBP[1]926*	0.0000	0.0000	0.0000	0.0000	0.0000	0.0000
NBP[1]978*	0.0000	0.0000	0.0000	0.0000	0.0000	0.0000
NBP[1]1021*	0.0000	0.0000	0.0000	0.0000	0.0000	0.0000
NBP[1]1075*	0.0000	0.0000	0.0000	0.0000	0.0000	0.0000
NBP[1]1123*	0.0000	0.0000	0.0000	0.0000	0.0000	0.0000
NBP[1]1173*	0.0000	0.0000	0.0000	0.0000	0.0000	0.0000
NBP[1]1250*	0.0000	0.0000	0.0000	0.0000	0.0000	0.0000
NBP[1]1339*	0.0000	0.0000	0.0000	0.0000	0.0000	0.0000
NBP[1]1432*	0.0000	0.0000	0.0000	0.0000	0.0000	0.0000
NBP[1]1528*	0.0000	0.0000	0.0000	0.0000	0.0000	0.0000
NBP[1]1637*	0.0000	0.0000	0.0000	0.0000	0.0000	0.0000
NBP[1]1732*	0.0000	0.0000	0.0000	0.0000	0.0000	0.0000
NBP[1]1819*	0.0001	0.0000	0.0029	0.0000	0.0001	0.0000
NBP[1]1913*	0.0112	0.0000	0.3148	0.0023	0.0121	0.0008
Total	268.0242	1.0000	137.5655	1.0000	15.9186	1.0000

Liquid Phase

Phase Fraction 0.0000

COMPONENTS	MOLAR FLOW (kgmole/h)	MOLE FRACTION	MASS FLOW (tonne/d)	MASS FRACTION	LIQUID VOLUME FLOW (m3/h)	LIQUID VOLUME FRACTION
Methane	0.0000	0.1136	0.0000	0.0144	0.0000	0.0364
Ethane	0.0000	0.0644	0.0000	0.0153	0.0000	0.0326
Propane	0.0000	0.0942	0.0000	0.0329	0.0000	0.0490
i-Butane	0.0000	0.0248	0.0000	0.0114	0.0000	0.0154
n-Butane	0.0000	0.0600	0.0000	0.0276	0.0000	0.0357
i-Pentane	0.0000	0.0217	0.0000	0.0124	0.0000	0.0150
n-Pentane	0.0000	0.0278	0.0000	0.0159	0.0000	0.0191
n-Hexane	0.0000	0.0618	0.0000	0.0422	0.0000	0.0481
Nitrogen	0.0000	0.0013	0.0000	0.0003	0.0000	0.0003
CO2	0.0000	0.0134	0.0000	0.0047	0.0000	0.0043
H2S	0.0000	0.0000	0.0000	0.0000	0.0000	0.0000
H2O	0.0000	0.0006	0.0000	0.0001	0.0000	0.0001
NBP[1]95*	0.0000	0.0082	0.0000	0.0044	0.0000	0.0049
NBP[1]121*	0.0000	0.0116	0.0000	0.0067	0.0000	0.0073
NBP[1]147*	0.0000	0.0172	0.0000	0.0109	0.0000	0.0118
NBP[1]171*	0.0000	0.0365	0.0000	0.0253	0.0000	0.0269
NBP[1]195*	0.0000	0.0516	0.0000	0.0382	0.0000	0.0401
NBP[1]222*	0.0000	0.0408	0.0000	0.0325	0.0000	0.0337
NBP[1]248*	0.0000	0.0353	0.0000	0.0302	0.0000	0.0309
NBP[1]273*	0.0000	0.0291	0.0000	0.0266	0.0000	0.0270
NBP[1]299*	0.0000	0.0230	0.0000	0.0225	0.0000	0.0225
NBP[1]325*	0.0000	0.0168	0.0000	0.0175	0.0000	0.0173
NBP[1]351*	0.0000	0.0137	0.0000	0.0151	0.0000	0.0148
NBP[1]377*	0.0000	0.0126	0.0000	0.0148	0.0000	0.0144
NBP[1]402*	0.0000	0.0116	0.0000	0.0145	0.0000	0.0139
NBP[1]428*	0.0000	0.0110	0.0000	0.0147	0.0000	0.0140
NBP[1]454*	0.0000	0.0110	0.0000	0.0157	0.0000	0.0148
NBP[1]480*	0.0000	0.0111	0.0000	0.0170	0.0000	0.0159

Licensed to: PETROCHEMICAL ENGINEERIN
* Specified by user.

Material Stream: Pandhi-Gas (continued)

Fluid Package: Basis-1
Property Package: Peng-Robinson

COMPOSITION

Liquid Phase (continued)

Phase Fraction 0.0000

COMPONENTS	MOLAR FLOW (kgmole/h)	MOLE FRACTION	MASS FLOW (tonne/d)	MASS FRACTION	LIQUID VOLUME FLOW (m3/h)	LIQUID VOLUME FRACTION
NBP[1]505*	0.0000	0.0108	0.0000	0.0176	0.0000	0.0162
NBP[1]531*	0.0000	0.0104	0.0000	0.0180	0.0000	0.0165
NBP[1]557*	0.0000	0.0100	0.0000	0.0185	0.0000	0.0168
NBP[1]582*	0.0000	0.0096	0.0000	0.0188	0.0000	0.0169
NBP[1]608*	0.0000	0.0092	0.0000	0.0192	0.0000	0.0171
NBP[1]634*	0.0000	0.0090	0.0000	0.0199	0.0000	0.0177
NBP[1]659*	0.0000	0.0089	0.0000	0.0207	0.0000	0.0182
NBP[1]685*	0.0000	0.0092	0.0000	0.0227	0.0000	0.0198
NBP[1]711*	0.0000	0.0096	0.0000	0.0249	0.0000	0.0216
NBP[1]736*	0.0000	0.0095	0.0000	0.0258	0.0000	0.0221
NBP[1]762*	0.0000	0.0093	0.0000	0.0263	0.0000	0.0225
NBP[1]788*	0.0000	0.0089	0.0000	0.0267	0.0000	0.0226
NBP[1]825*	0.0000	0.0149	0.0000	0.0481	0.0000	0.0404
NBP[1]873*	0.0000	0.0103	0.0000	0.0359	0.0000	0.0298
NBP[1]926*	0.0000	0.0081	0.0000	0.0305	0.0000	0.0250
NBP[1]978*	0.0000	0.0083	0.0000	0.0343	0.0000	0.0277
NBP[1]1021*	0.0000	0.0041	0.0000	0.0179	0.0000	0.0143
NBP[1]1075*	0.0000	0.0025	0.0000	0.0117	0.0000	0.0093
NBP[1]1123*	0.0000	0.0023	0.0000	0.0116	0.0000	0.0091
NBP[1]1173*	0.0000	0.0017	0.0000	0.0088	0.0000	0.0069
NBP[1]1250*	0.0000	0.0022	0.0000	0.0125	0.0000	0.0096
NBP[1]1339*	0.0000	0.0020	0.0000	0.0130	0.0000	0.0098
NBP[1]1432*	0.0000	0.0014	0.0000	0.0100	0.0000	0.0074
NBP[1]1528*	0.0000	0.0010	0.0000	0.0076	0.0000	0.0055
NBP[1]1637*	0.0000	0.0007	0.0000	0.0056	0.0000	0.0041
NBP[1]1732*	0.0000	0.0006	0.0000	0.0048	0.0000	0.0034
NBP[1]1819*	0.0000	0.0005	0.0000	0.0047	0.0000	0.0034
NBP[1]1913*	0.0000	0.0000	0.0000	0.0000	0.0000	0.0000
Total	0.0000	1.0000	0.0000	1.0000	0.0000	1.0000

Phase Fraction

COMPONENTS	MOLAR FLOW	MOLE FRACTION	MASS FLOW	MASS FRACTION	LIQUID VOLUME FLOW	LIQUID VOLUME FRACTION

* Specified by user.

Material Stream: Pandhi-Gas (continued)

Fluid Package: Basis-1
Property Package: Peng-Robinson

COMPOSITION

					Phase Fraction	
COMPONENTS	MOLAR FLOW	MOLE FRACTION	MASS FLOW	MASS FRACTION	LIQUID VOLUME FLOW	LIQUID VOLUME FRACTION
Total		1.0000		1.0000		1.0000

Material Stream: Pandhi-W

Fluid Package: Basis-1
Property Package: Peng-Robinson

CONDITIONS

		Overall	Vapour Phase	Liquid Phase	Aqueous Phase
Vapour / Phase Fraction		0.0000	0.0000	0.0000	1.0000
Temperature:	(F)	84.79	84.79	84.79	84.79
Pressure:	(psig)	445.0	445.0	445.0	445.0
Molar Flow	(MMSCFD)	2.135	0.0000	0.0000	2.135
Mass Flow	(tonne/d)	46.00	0.0000	0.0000	46.00
Std Ideal Liq Vol Flow	(barrel/day)	290.0	0.0000	0.0000	290.0
Molar Enthalpy	(kJ/kgmole)	-2.859e+005	-8.928e+004	-2.875e+005	-2.859e+005
Molar Entropy	(kJ/kgmole-C)	54.83	159.3	218.7	54.83
Heat Flow	(MMBtu/hr)	-28.81	0.0000	0.0000	-28.81
Liq Vol Flow @Std Cond	(barrel/day)	285.1 *	0.0000	0.0000	285.1

* Specified by user.

Material Stream: Pandhi-W (continued)

Fluid Package: Basis-1
Property Package: Peng-Robinson

PROPERTIES

	Overall	Vapour Phase	Liquid Phase	Aqueous Phase
Molecular Weight	18.03	21.39	126.4	18.03
Molar Density (kgmole/m3)	55.76	1.408	6.079	55.76
Mass Density (kg/m3)	1005	30.10	768.1	1005
Act. Volume Flow (barrel/day)	287.9	0.0000	0.0000	287.9
Mass Enthalpy (kJ/kg)	-1.586e+004	-4175	-2275	-1.586e+004
Mass Entropy (kJ/kg-C)	3.042	7.448	1.731	3.042
Heat Capacity (kJ/kgmole-C)	77.64	47.13	253.8	77.64
Mass Heat Capacity (kJ/kg-C)	4.307	2.204	2.009	4.307
LHV Molar Basis (Std) (Btu/SCF)	1.809e-004	---	---	1.809e-004
LHV Mass Basis (Std) (kJ/kg)	8.858e-003	---	---	8.858e-003
Phase Fraction [Vol. Basis]	---	---	---	1.000
Phase Fraction [Mass Basis]	0.0000	0.0000	0.0000	1.000
Partial Pressure of CO2 (psig)	-14.70	---	---	---
Cost Based on Flow (Cost/s)	0.0000	0.0000	0.0000	0.0000
Act. Gas Flow (ACT_m3/h)	---	---	---	---
Avg. Liq. Density (kgmole/m3)	55.35	16.84	5.980	55.35
Specific Heat (kJ/kgmole-C)	77.64	47.13	253.8	77.64
Std. Gas Flow (STD_m3/h)	2514	0.0000	0.0000	2514
Std. Ideal Liq. Mass Density (kg/m3)	997.8	360.1	755.6	997.8
Act. Liq. Flow (barrel/day)	287.9	---	---	287.9
Z Factor	---	0.8953	0.2073	2.260e-002
Watson K	8.497	17.28	11.99	8.497
User Property	---	---	---	---
Partial Pressure of H2S (psig)	-14.70	---	---	---
Cp/(Cp - R)	1.120	1.214	1.034	1.120
Cp/Cv	1.149	1.388	1.034	1.149
Heat of Vap. (kJ/kgmole)	3.304e+004	---	---	---
Kinematic Viscosity (cSt)	0.8047	0.3993	12.25	0.8047
Liq. Mass Density (Std. Cond) (kg/m3)	1015	0.9081	781.8	1015
Liq. Vol. Flow (Std. Cond) (barrel/day)	285.1	0.0000	0.0000	285.1
Liquid Fraction	1.000	0.0000	1.000	1.000
Molar Volume (m3/kgmole)	1.793e-002	0.7104	0.1645	1.793e-002
Mass Heat of Vap. (kJ/kg)	1833	---	---	---
Phase Fraction [Molar Basis]	0.0000	0.0000	0.0000	1.0000
Surface Tension (dyne/cm)	71.32	---	15.96	71.32
Thermal Conductivity (W/m-K)	0.6173	3.302e-002	0.1006	0.6173
Viscosity (cP)	0.8089	1.202e-002	9.409	0.8089
Cv (Semi-Ideal) (kJ/kgmole-C)	69.33	38.81	245.5	69.33
Mass Cv (Semi-Ideal) (kJ/kg-C)	3.846	1.815	1.943	3.846
Cv (kJ/kgmole-C)	67.56	33.96	245.5	67.56
Mass Cv (kJ/kg-C)	3.748	1.588	1.943	3.748
Cv (Ent. Method) (kJ/kgmole-C)	66.88	-3697	---	66.88
Mass Cv (Ent. Method) (kJ/kg-C)	3.711	-172.9	---	3.711
Cp/Cv (Ent. Method)	1.161	-1.275e-002	---	1.161
Reid VP at 37.8 C (psig)	---	---	97.87	---
True VP at 37.8 C (psig)	17.11	3607	475.9	17.11
Liq. Vol. Flow - Sum(Std. Cond) (barrel/day)	285.1	0.0000	0.0000	285.1
HHV Molar Basis (Std) (Btu/SCF)	46.45	---	---	46.45
HHV Mass Basis (Std) (kJ/kg)	2274	---	---	2274
CO2 Loading	---	---	---	---
CO2 App ML Con (kgmole/m3)	2.216e-002	---	---	2.216e-002
CO2 App WT Con (kgmol/kg)	2.204e-005	---	---	2.204e-005
Phase Fraction [Act. Vol. Basis]	0.0000	0.0000	0.0000	1.000
Mass Exergy (kJ/kg)	3.750	---	---	---
Viscosity Index	9.106e-002	---	---	---
Ideal Gas Cp/Cv	1.329	1.249	1.043	1.329
Ideal Gas Cp (kJ/kgmole-C)	33.60	41.72	200.0	33.60

* Specified by user.

Material Stream: Pandhi-W (continued)

Fluid Package: Basis-1
Property Package: Peng-Robinson

PROPERTIES

	Overall	Vapour Phase	Liquid Phase	Aqueous Phase
Mass Ideal Gas Cp (kJ/kg-C)	1.864	1.951	1.583	1.864
Bubble Point Pressure (psig)	12.46	---	---	---

COMPOSITION

Overall Phase

Vapour Fraction 0.0000

COMPONENTS	MOLAR FLOW (kgmole/h)	MOLE FRACTION	MASS FLOW (tonne/d)	MASS FRACTION	LIQUID VOLUME FLOW (m3/h)	LIQUID VOLUME FRACTION
Methane	0.0000	0.0000	0.0000	0.0000	0.0000	0.0000
Ethane	0.0000	0.0000	0.0000	0.0000	0.0000	0.0000
Propane	0.0000	0.0000	0.0000	0.0000	0.0000	0.0000
i-Butane	0.0000	0.0000	0.0000	0.0000	0.0000	0.0000
n-Butane	0.0000	0.0000	0.0000	0.0000	0.0000	0.0000
i-Pentane	0.0000	0.0000	0.0000	0.0000	0.0000	0.0000
n-Pentane	0.0000	0.0000	0.0000	0.0000	0.0000	0.0000
n-Hexane	0.0000	0.0000	0.0000	0.0000	0.0000	0.0000
Nitrogen	0.0008	0.0000	0.0006	0.0000	0.0000	0.0000
CO2	0.0423	0.0004	0.0446	0.0010	0.0023	0.0012
H2S	0.0000	0.0000	0.0000	0.0000	0.0000	0.0000
H2O	106.2938	0.9996	45.9575	0.9990	1.9188	0.9988
NBP[1]95*	0.0000	0.0000	0.0000	0.0000	0.0000	0.0000
NBP[1]121*	0.0000	0.0000	0.0000	0.0000	0.0000	0.0000
NBP[1]147*	0.0000	0.0000	0.0000	0.0000	0.0000	0.0000
NBP[1]171*	0.0000	0.0000	0.0000	0.0000	0.0000	0.0000
NBP[1]195*	0.0000	0.0000	0.0000	0.0000	0.0000	0.0000
NBP[1]222*	0.0000	0.0000	0.0000	0.0000	0.0000	0.0000
NBP[1]248*	0.0000	0.0000	0.0000	0.0000	0.0000	0.0000
NBP[1]273*	0.0000	0.0000	0.0000	0.0000	0.0000	0.0000
NBP[1]299*	0.0000	0.0000	0.0000	0.0000	0.0000	0.0000
NBP[1]325*	0.0000	0.0000	0.0000	0.0000	0.0000	0.0000
NBP[1]351*	0.0000	0.0000	0.0000	0.0000	0.0000	0.0000
NBP[1]377*	0.0000	0.0000	0.0000	0.0000	0.0000	0.0000
NBP[1]402*	0.0000	0.0000	0.0000	0.0000	0.0000	0.0000
NBP[1]428*	0.0000	0.0000	0.0000	0.0000	0.0000	0.0000
NBP[1]454*	0.0000	0.0000	0.0000	0.0000	0.0000	0.0000
NBP[1]480*	0.0000	0.0000	0.0000	0.0000	0.0000	0.0000
NBP[1]505*	0.0000	0.0000	0.0000	0.0000	0.0000	0.0000
NBP[1]531*	0.0000	0.0000	0.0000	0.0000	0.0000	0.0000
NBP[1]557*	0.0000	0.0000	0.0000	0.0000	0.0000	0.0000
NBP[1]582*	0.0000	0.0000	0.0000	0.0000	0.0000	0.0000
NBP[1]608*	0.0000	0.0000	0.0000	0.0000	0.0000	0.0000
NBP[1]634*	0.0000	0.0000	0.0000	0.0000	0.0000	0.0000
NBP[1]659*	0.0000	0.0000	0.0000	0.0000	0.0000	0.0000
NBP[1]685*	0.0000	0.0000	0.0000	0.0000	0.0000	0.0000
NBP[1]711*	0.0000	0.0000	0.0000	0.0000	0.0000	0.0000
NBP[1]736*	0.0000	0.0000	0.0000	0.0000	0.0000	0.0000
NBP[1]762*	0.0000	0.0000	0.0000	0.0000	0.0000	0.0000
NBP[1]788*	0.0000	0.0000	0.0000	0.0000	0.0000	0.0000
NBP[1]825*	0.0000	0.0000	0.0000	0.0000	0.0000	0.0000
NBP[1]873*	0.0000	0.0000	0.0000	0.0000	0.0000	0.0000
NBP[1]926*	0.0000	0.0000	0.0000	0.0000	0.0000	0.0000
NBP[1]978*	0.0000	0.0000	0.0000	0.0000	0.0000	0.0000
NBP[1]1021*	0.0000	0.0000	0.0000	0.0000	0.0000	0.0000
NBP[1]1075*	0.0000	0.0000	0.0000	0.0000	0.0000	0.0000
NBP[1]1123*	0.0000	0.0000	0.0000	0.0000	0.0000	0.0000
NBP[1]1173*	0.0000	0.0000	0.0000	0.0000	0.0000	0.0000
NBP[1]1250*	0.0000	0.0000	0.0000	0.0000	0.0000	0.0000

* Specified by user.

Material Stream: Pandhi-W (continued)

Fluid Package: Basis-1
Property Package: Peng-Robinson

COMPOSITION

Overall Phase (continued)

Vapour Fraction 0.0000

COMPONENTS	MOLAR FLOW (kgmole/h)	MOLE FRACTION	MASS FLOW (tonne/d)	MASS FRACTION	LIQUID VOLUME FLOW (m3/h)	LIQUID VOLUME FRACTION
NBP[1]1339*	0.0000	0.0000	0.0000	0.0000	0.0000	0.0000
NBP[1]1432*	0.0000	0.0000	0.0000	0.0000	0.0000	0.0000
NBP[1]1528*	0.0000	0.0000	0.0000	0.0000	0.0000	0.0000
NBP[1]1637*	0.0000	0.0000	0.0000	0.0000	0.0000	0.0000
NBP[1]1732*	0.0000	0.0000	0.0000	0.0000	0.0000	0.0000
NBP[1]1819*	0.0000	0.0000	0.0000	0.0000	0.0000	0.0000
NBP[1]1913*	0.0000	0.0000	0.0000	0.0000	0.0000	0.0000
Total	106.3369	1.0000	46.0026	1.0000	1.9210	1.0000

Vapour Phase

Phase Fraction 0.0000

COMPONENTS	MOLAR FLOW (kgmole/h)	MOLE FRACTION	MASS FLOW (tonne/d)	MASS FRACTION	LIQUID VOLUME FLOW (m3/h)	LIQUID VOLUME FRACTION
Methane	0.0000	0.7649	0.0000	0.5738	0.0000	0.6901
Ethane	0.0000	0.1032	0.0000	0.1451	0.0000	0.1469
Propane	0.0000	0.0507	0.0000	0.1046	0.0000	0.0743
i-Butane	0.0000	0.0059	0.0000	0.0161	0.0000	0.0103
n-Butane	0.0000	0.0108	0.0000	0.0292	0.0000	0.0181
i-Pentane	0.0000	0.0017	0.0000	0.0058	0.0000	0.0034
n-Pentane	0.0000	0.0017	0.0000	0.0059	0.0000	0.0033
n-Hexane	0.0000	0.0014	0.0000	0.0056	0.0000	0.0030
Nitrogen	0.0000	0.0208	0.0000	0.0272	0.0000	0.0122
CO2	0.0000	0.0341	0.0000	0.0701	0.0000	0.0306
H2S	0.0000	0.0000	0.0000	0.0000	0.0000	0.0000
H2O	0.0000	0.0015	0.0000	0.0012	0.0000	0.0004
NBP[1]95*	0.0000	0.0005	0.0000	0.0017	0.0000	0.0009
NBP[1]121*	0.0000	0.0005	0.0000	0.0017	0.0000	0.0009
NBP[1]147*	0.0000	0.0005	0.0000	0.0018	0.0000	0.0009
NBP[1]171*	0.0000	0.0006	0.0000	0.0027	0.0000	0.0013
NBP[1]195*	0.0000	0.0006	0.0000	0.0026	0.0000	0.0013
NBP[1]222*	0.0000	0.0003	0.0000	0.0013	0.0000	0.0006
NBP[1]248*	0.0000	0.0001	0.0000	0.0007	0.0000	0.0003
NBP[1]273*	0.0000	0.0001	0.0000	0.0004	0.0000	0.0002
NBP[1]299*	0.0000	0.0000	0.0000	0.0002	0.0000	0.0001
NBP[1]325*	0.0000	0.0000	0.0000	0.0001	0.0000	0.0000
NBP[1]351*	0.0000	0.0000	0.0000	0.0000	0.0000	0.0000
NBP[1]377*	0.0000	0.0000	0.0000	0.0000	0.0000	0.0000
NBP[1]402*	0.0000	0.0000	0.0000	0.0000	0.0000	0.0000
NBP[1]428*	0.0000	0.0000	0.0000	0.0000	0.0000	0.0000
NBP[1]454*	0.0000	0.0000	0.0000	0.0000	0.0000	0.0000
NBP[1]480*	0.0000	0.0000	0.0000	0.0000	0.0000	0.0000
NBP[1]505*	0.0000	0.0000	0.0000	0.0000	0.0000	0.0000
NBP[1]531*	0.0000	0.0000	0.0000	0.0000	0.0000	0.0000
NBP[1]557*	0.0000	0.0000	0.0000	0.0000	0.0000	0.0000
NBP[1]582*	0.0000	0.0000	0.0000	0.0000	0.0000	0.0000
NBP[1]608*	0.0000	0.0000	0.0000	0.0000	0.0000	0.0000
NBP[1]634*	0.0000	0.0000	0.0000	0.0000	0.0000	0.0000
NBP[1]659*	0.0000	0.0000	0.0000	0.0000	0.0000	0.0000
NBP[1]685*	0.0000	0.0000	0.0000	0.0000	0.0000	0.0000
NBP[1]711*	0.0000	0.0000	0.0000	0.0000	0.0000	0.0000
NBP[1]736*	0.0000	0.0000	0.0000	0.0000	0.0000	0.0000
NBP[1]762*	0.0000	0.0000	0.0000	0.0000	0.0000	0.0000
NBP[1]788*	0.0000	0.0000	0.0000	0.0000	0.0000	0.0000
NBP[1]825*	0.0000	0.0000	0.0000	0.0000	0.0000	0.0000
NBP[1]873*	0.0000	0.0000	0.0000	0.0000	0.0000	0.0000

* Specified by user.

Material Stream: Pandhi-W (continued)

Fluid Package: Basis-1
Property Package: Peng-Robinson

COMPOSITION

Vapour Phase (continued)

Phase Fraction 0.0000

COMPONENTS	MOLAR FLOW (kgmole/h)	MOLE FRACTION	MASS FLOW (tonne/d)	MASS FRACTION	LIQUID VOLUME FLOW (m3/h)	LIQUID VOLUME FRACTION
NBP[1]926*	0.0000	0.0000	0.0000	0.0000	0.0000	0.0000
NBP[1]978*	0.0000	0.0000	0.0000	0.0000	0.0000	0.0000
NBP[1]1021*	0.0000	0.0000	0.0000	0.0000	0.0000	0.0000
NBP[1]1075*	0.0000	0.0000	0.0000	0.0000	0.0000	0.0000
NBP[1]1123*	0.0000	0.0000	0.0000	0.0000	0.0000	0.0000
NBP[1]1173*	0.0000	0.0000	0.0000	0.0000	0.0000	0.0000
NBP[1]1250*	0.0000	0.0000	0.0000	0.0000	0.0000	0.0000
NBP[1]1339*	0.0000	0.0000	0.0000	0.0000	0.0000	0.0000
NBP[1]1432*	0.0000	0.0000	0.0000	0.0000	0.0000	0.0000
NBP[1]1528*	0.0000	0.0000	0.0000	0.0000	0.0000	0.0000
NBP[1]1637*	0.0000	0.0000	0.0000	0.0000	0.0000	0.0000
NBP[1]1732*	0.0000	0.0000	0.0000	0.0000	0.0000	0.0000
NBP[1]1819*	0.0000	0.0000	0.0000	0.0000	0.0000	0.0000
NBP[1]1913*	0.0000	0.0000	0.0000	0.0023	0.0000	0.0008
Total	0.0000	1.0000	0.0000	1.0000	0.0000	1.0000

Liquid Phase

Phase Fraction 0.0000

COMPONENTS	MOLAR FLOW (kgmole/h)	MOLE FRACTION	MASS FLOW (tonne/d)	MASS FRACTION	LIQUID VOLUME FLOW (m3/h)	LIQUID VOLUME FRACTION
Methane	0.0000	0.1136	0.0000	0.0144	0.0000	0.0364
Ethane	0.0000	0.0644	0.0000	0.0153	0.0000	0.0326
Propane	0.0000	0.0942	0.0000	0.0329	0.0000	0.0490
i-Butane	0.0000	0.0248	0.0000	0.0114	0.0000	0.0154
n-Butane	0.0000	0.0600	0.0000	0.0276	0.0000	0.0357
i-Pentane	0.0000	0.0217	0.0000	0.0124	0.0000	0.0150
n-Pentane	0.0000	0.0278	0.0000	0.0159	0.0000	0.0191
n-Hexane	0.0000	0.0618	0.0000	0.0422	0.0000	0.0481
Nitrogen	0.0000	0.0013	0.0000	0.0003	0.0000	0.0003
CO2	0.0000	0.0134	0.0000	0.0047	0.0000	0.0043
H2S	0.0000	0.0000	0.0000	0.0000	0.0000	0.0000
H2O	0.0000	0.0006	0.0000	0.0001	0.0000	0.0001
NBP[1]95*	0.0000	0.0082	0.0000	0.0044	0.0000	0.0049
NBP[1]121*	0.0000	0.0116	0.0000	0.0067	0.0000	0.0073
NBP[1]147*	0.0000	0.0172	0.0000	0.0109	0.0000	0.0118
NBP[1]171*	0.0000	0.0365	0.0000	0.0253	0.0000	0.0269
NBP[1]195*	0.0000	0.0516	0.0000	0.0382	0.0000	0.0401
NBP[1]222*	0.0000	0.0408	0.0000	0.0325	0.0000	0.0337
NBP[1]248*	0.0000	0.0353	0.0000	0.0302	0.0000	0.0309
NBP[1]273*	0.0000	0.0291	0.0000	0.0266	0.0000	0.0270
NBP[1]299*	0.0000	0.0230	0.0000	0.0225	0.0000	0.0225
NBP[1]325*	0.0000	0.0168	0.0000	0.0175	0.0000	0.0173
NBP[1]351*	0.0000	0.0137	0.0000	0.0151	0.0000	0.0148
NBP[1]377*	0.0000	0.0126	0.0000	0.0148	0.0000	0.0144
NBP[1]402*	0.0000	0.0116	0.0000	0.0145	0.0000	0.0139
NBP[1]428*	0.0000	0.0110	0.0000	0.0147	0.0000	0.0140
NBP[1]454*	0.0000	0.0110	0.0000	0.0157	0.0000	0.0148
NBP[1]480*	0.0000	0.0111	0.0000	0.0170	0.0000	0.0159
NBP[1]505*	0.0000	0.0108	0.0000	0.0176	0.0000	0.0162
NBP[1]531*	0.0000	0.0104	0.0000	0.0180	0.0000	0.0165
NBP[1]557*	0.0000	0.0100	0.0000	0.0185	0.0000	0.0168
NBP[1]582*	0.0000	0.0096	0.0000	0.0188	0.0000	0.0169
NBP[1]608*	0.0000	0.0092	0.0000	0.0192	0.0000	0.0171
NBP[1]634*	0.0000	0.0090	0.0000	0.0199	0.0000	0.0177
NBP[1]659*	0.0000	0.0089	0.0000	0.0207	0.0000	0.0182

* Specified by user.

Material Stream: Pandhi-W (continued)

Fluid Package: Basis-1
Property Package: Peng-Robinson

COMPOSITION

Liquid Phase (continued)

Phase Fraction 0.0000

COMPONENTS	MOLAR FLOW (kgmole/h)	MOLE FRACTION	MASS FLOW (tonne/d)	MASS FRACTION	LIQUID VOLUME FLOW (m3/h)	LIQUID VOLUME FRACTION
NBP[1]685*	0.0000	0.0092	0.0000	0.0227	0.0000	0.0198
NBP[1]711*	0.0000	0.0096	0.0000	0.0249	0.0000	0.0216
NBP[1]736*	0.0000	0.0095	0.0000	0.0258	0.0000	0.0221
NBP[1]762*	0.0000	0.0093	0.0000	0.0263	0.0000	0.0225
NBP[1]788*	0.0000	0.0089	0.0000	0.0267	0.0000	0.0226
NBP[1]825*	0.0000	0.0149	0.0000	0.0481	0.0000	0.0404
NBP[1]873*	0.0000	0.0103	0.0000	0.0359	0.0000	0.0298
NBP[1]926*	0.0000	0.0081	0.0000	0.0305	0.0000	0.0250
NBP[1]978*	0.0000	0.0083	0.0000	0.0343	0.0000	0.0277
NBP[1]1021*	0.0000	0.0041	0.0000	0.0179	0.0000	0.0143
NBP[1]1075*	0.0000	0.0025	0.0000	0.0117	0.0000	0.0093
NBP[1]1123*	0.0000	0.0023	0.0000	0.0116	0.0000	0.0091
NBP[1]1173*	0.0000	0.0017	0.0000	0.0088	0.0000	0.0069
NBP[1]1250*	0.0000	0.0022	0.0000	0.0125	0.0000	0.0096
NBP[1]1339*	0.0000	0.0020	0.0000	0.0130	0.0000	0.0098
NBP[1]1432*	0.0000	0.0014	0.0000	0.0100	0.0000	0.0074
NBP[1]1528*	0.0000	0.0010	0.0000	0.0076	0.0000	0.0055
NBP[1]1637*	0.0000	0.0007	0.0000	0.0056	0.0000	0.0041
NBP[1]1732*	0.0000	0.0006	0.0000	0.0048	0.0000	0.0034
NBP[1]1819*	0.0000	0.0005	0.0000	0.0047	0.0000	0.0034
NBP[1]1913*	0.0000	0.0000	0.0000	0.0000	0.0000	0.0000
Total	0.0000	1.0000	0.0000	1.0000	0.0000	1.0000

Phase Fraction

COMPONENTS	MOLAR FLOW	MOLE FRACTION	MASS FLOW	MASS FRACTION	LIQUID VOLUME FLOW	LIQUID VOLUME FRACTION

* Specified by user.

Material Stream: Pandhi-W (continued)

Fluid Package: Basis-1
Property Package: Peng-Robinson

COMPOSITION

COMPONENTS	MOLAR FLOW	MOLE FRACTION	MASS FLOW	MASS FRACTION	LIQUID VOLUME FLOW	Phase Fraction: LIQUID VOLUME FRACTION
Total		1.0000		1.0000		1.0000

Material Stream: Pandhi-Water

Fluid Package: Basis-1
Property Package: Peng-Robinson

CONDITIONS

		Overall	Vapour Phase	Liquid Phase	Aqueous Phase
Vapour / Phase Fraction		0.0000	0.0000	0.0000	1.0000
Temperature:	(F)	102.7	102.7	102.7	102.7
Pressure:	(psig)	1235	1235	1235	1235
Molar Flow	(MMSCFD)	2.137	0.0000	0.0000	2.137
Mass Flow	(tonne/d)	46.06	0.0000	0.0000	46.06
Std Ideal Liq Vol Flow	(barrel/day)	290.4	0.0000	0.0000	290.4
Molar Enthalpy	(kJ/kgmole)	-2.850e+005	-9.030e+004	-2.336e+005	-2.850e+005
Molar Entropy	(kJ/kgmole-C)	57.28	149.1	203.1	57.28
Heat Flow	(MMBtu/hr)	-28.76	0.0000	0.0000	-28.76
Liq Vol Flow @Std Cond	(barrel/day)	285.4 *	0.0000	0.0000	285.4

PROPERTIES

		Overall	Vapour Phase	Liquid Phase	Aqueous Phase
Molecular Weight		18.03	21.52	97.59	18.03
Molar Density	(kgmole/m3)	55.42	4.292	7.302	55.42
Mass Density	(kg/m3)	999.4	92.38	712.6	999.4
Act. Volume Flow	(barrel/day)	289.9	0.0000	0.0000	289.9
Mass Enthalpy	(kJ/kg)	-1.581e+004	-4196	-2394	-1.581e+004
Mass Entropy	(kJ/kg-C)	3.177	6.928	2.081	3.177

* Specified by user.

Material Stream: Pandhi-Water (continued)

Fluid Package: Basis-1
Property Package: Peng-Robinson

PROPERTIES

	Overall	Vapour Phase	Liquid Phase	Aqueous Phase
Heat Capacity (kJ/kgmole-C)	77.55	60.21	206.4	77.55
Mass Heat Capacity (kJ/kg-C)	4.301	2.798	2.115	4.301
LHV Molar Basis (Std) (Btu/SCF)	6.516e-004	---	---	6.516e-004
LHV Mass Basis (Std) (kJ/kg)	3.189e-002	---	---	3.189e-002
Phase Fraction [Vol. Basis]	---	---	---	1.000
Phase Fraction [Mass Basis]	0.0000	0.0000	0.0000	1.000
Partial Pressure of CO2 (psig)	-14.70	---	---	---
Cost Based on Flow (Cost/s)	0.0000	0.0000	0.0000	0.0000
Act. Gas Flow (ACT_m3/h)	---	---	---	---
Avg. Liq. Density (kgmole/m3)	55.32	16.81	7.237	55.32
Specific Heat (kJ/kgmole-C)	77.55	60.21	206.4	77.55
Std. Gas Flow (STD_m3/h)	2517	0.0000	0.0000	2517
Std. Ideal Liq. Mass Density (kg/m3)	997.6	361.7	706.2	997.6
Act. Liq. Flow (barrel/day)	289.9	---	---	289.9
Z Factor	---	0.7728	0.4543	5.985e-002
Watson K	8.487	17.21	12.20	8.487
User Property	---	---	---	---
Partial Pressure of H2S (psig)	-14.70	---	---	---
Cp/(Cp - R)	1.120	1.160	1.042	1.120
Cp/Cv	1.153	1.681	1.277	1.153
Heat of Vap. (kJ/kgmole)	2.636e+004	---	---	---
Kinematic Viscosity (cSt)	0.6611	0.1603	2.754	0.6611
Liq. Mass Density (Std. Cond) (kg/m3)	1015	0.9139	738.0	1015
Liq. Vol. Flow (Std. Cond) (barrel/day)	285.4	0.0000	0.0000	285.4
Liquid Fraction	1.000	0.0000	1.000	1.000
Molar Volume (m3/kgmole)	1.804e-002	0.2330	0.1369	1.804e-002
Mass Heat of Vap. (kJ/kg)	1462	---	---	---
Phase Fraction [Molar Basis]	0.0000	0.0000	0.0000	1.0000
Surface Tension (dyne/cm)	69.57	---	11.02	69.57
Thermal Conductivity (W/m-K)	0.6306	4.125e-002	8.920e-002	0.6306
Viscosity (cP)	0.6607	1.481e-002	1.963	0.6607
Cv (Semi-Ideal) (kJ/kgmole-C)	69.24	51.90	198.1	69.24
Mass Cv (Semi-Ideal) (kJ/kg-C)	3.840	2.411	2.030	3.840
Cv (kJ/kgmole-C)	67.25	35.81	161.6	67.25
Mass Cv (kJ/kg-C)	3.729	1.664	1.656	3.729
Cv (Ent. Method) (kJ/kgmole-C)	66.54	---	172.4	66.54
Mass Cv (Ent. Method) (kJ/kg-C)	3.690	---	1.766	3.690
Cp/Cv (Ent. Method)	1.166	---	1.198	1.166
Reid VP at 37.8 C (psig)	---	---	254.3	---
True VP at 37.8 C (psig)	118.6	2761	1222	118.6
Liq. Vol. Flow - Sum(Std. Cond) (barrel/day)	285.4	0.0000	0.0000	285.4
HHV Molar Basis (Std) (Btu/SCF)	46.43	---	---	46.43
HHV Mass Basis (Std) (kJ/kg)	2273	---	---	2273
CO2 Loading	---	---	---	---
CO2 App ML Con (kgmole/m3)	3.716e-002	---	---	3.716e-002
CO2 App WT Con (kgmol/kg)	3.718e-005	---	---	3.718e-005
Phase Fraction [Act. Vol. Basis]	0.0000	0.0000	0.0000	1.000
Mass Exergy (kJ/kg)	11.47	---	---	---
Viscosity Index	-3.121	---	---	---
Ideal Gas Cp/Cv	1.328	1.243	1.055	1.328
Ideal Gas Cp (kJ/kgmole-C)	33.66	42.57	160.8	33.66
Mass Ideal Gas Cp (kJ/kg-C)	1.867	1.978	1.648	1.867
Bubble Point Pressure (psig)	120.0	---	---	---

* Specified by user.

Material Stream: Pandhi-Water (continued)

Fluid Package: Basis-1
Property Package: Peng-Robinson

COMPOSITION

Overall Phase

Vapour Fraction 0.0000

COMPONENTS	MOLAR FLOW (kgmole/h)	MOLE FRACTION	MASS FLOW (tonne/d)	MASS FRACTION	LIQUID VOLUME FLOW (m3/h)	LIQUID VOLUME FRACTION
Methane	0.0001	0.0000	0.0000	0.0000	0.0000	0.0000
Ethane	0.0000	0.0000	0.0000	0.0000	0.0000	0.0000
Propane	0.0000	0.0000	0.0000	0.0000	0.0000	0.0000
i-Butane	0.0000	0.0000	0.0000	0.0000	0.0000	0.0000
n-Butane	0.0000	0.0000	0.0000	0.0000	0.0000	0.0000
i-Pentane	0.0000	0.0000	0.0000	0.0000	0.0000	0.0000
n-Pentane	0.0000	0.0000	0.0000	0.0000	0.0000	0.0000
n-Hexane	0.0000	0.0000	0.0000	0.0000	0.0000	0.0000
Nitrogen	0.0020	0.0000	0.0014	0.0000	0.0001	0.0000
CO2	0.0714	0.0007	0.0754	0.0016	0.0038	0.0020
H2S	0.0000	0.0000	0.0000	0.0000	0.0000	0.0000
H2O	106.3633	0.9993	45.9875	0.9983	1.9200	0.9980
NBP[1]95*	0.0000	0.0000	0.0000	0.0000	0.0000	0.0000
NBP[1]121*	0.0000	0.0000	0.0000	0.0000	0.0000	0.0000
NBP[1]147*	0.0000	0.0000	0.0000	0.0000	0.0000	0.0000
NBP[1]171*	0.0000	0.0000	0.0000	0.0000	0.0000	0.0000
NBP[1]195*	0.0000	0.0000	0.0000	0.0000	0.0000	0.0000
NBP[1]222*	0.0000	0.0000	0.0000	0.0000	0.0000	0.0000
NBP[1]248*	0.0000	0.0000	0.0000	0.0000	0.0000	0.0000
NBP[1]273*	0.0000	0.0000	0.0000	0.0000	0.0000	0.0000
NBP[1]299*	0.0000	0.0000	0.0000	0.0000	0.0000	0.0000
NBP[1]325*	0.0000	0.0000	0.0000	0.0000	0.0000	0.0000
NBP[1]351*	0.0000	0.0000	0.0000	0.0000	0.0000	0.0000
NBP[1]377*	0.0000	0.0000	0.0000	0.0000	0.0000	0.0000
NBP[1]402*	0.0000	0.0000	0.0000	0.0000	0.0000	0.0000
NBP[1]428*	0.0000	0.0000	0.0000	0.0000	0.0000	0.0000
NBP[1]454*	0.0000	0.0000	0.0000	0.0000	0.0000	0.0000
NBP[1]480*	0.0000	0.0000	0.0000	0.0000	0.0000	0.0000
NBP[1]505*	0.0000	0.0000	0.0000	0.0000	0.0000	0.0000
NBP[1]531*	0.0000	0.0000	0.0000	0.0000	0.0000	0.0000
NBP[1]557*	0.0000	0.0000	0.0000	0.0000	0.0000	0.0000
NBP[1]582*	0.0000	0.0000	0.0000	0.0000	0.0000	0.0000
NBP[1]608*	0.0000	0.0000	0.0000	0.0000	0.0000	0.0000
NBP[1]634*	0.0000	0.0000	0.0000	0.0000	0.0000	0.0000
NBP[1]659*	0.0000	0.0000	0.0000	0.0000	0.0000	0.0000
NBP[1]685*	0.0000	0.0000	0.0000	0.0000	0.0000	0.0000
NBP[1]711*	0.0000	0.0000	0.0000	0.0000	0.0000	0.0000
NBP[1]736*	0.0000	0.0000	0.0000	0.0000	0.0000	0.0000
NBP[1]762*	0.0000	0.0000	0.0000	0.0000	0.0000	0.0000
NBP[1]788*	0.0000	0.0000	0.0000	0.0000	0.0000	0.0000
NBP[1]825*	0.0000	0.0000	0.0000	0.0000	0.0000	0.0000
NBP[1]873*	0.0000	0.0000	0.0000	0.0000	0.0000	0.0000
NBP[1]926*	0.0000	0.0000	0.0000	0.0000	0.0000	0.0000
NBP[1]978*	0.0000	0.0000	0.0000	0.0000	0.0000	0.0000
NBP[1]1021*	0.0000	0.0000	0.0000	0.0000	0.0000	0.0000
NBP[1]1075*	0.0000	0.0000	0.0000	0.0000	0.0000	0.0000
NBP[1]1123*	0.0000	0.0000	0.0000	0.0000	0.0000	0.0000
NBP[1]1173*	0.0000	0.0000	0.0000	0.0000	0.0000	0.0000
NBP[1]1250*	0.0000	0.0000	0.0000	0.0000	0.0000	0.0000
NBP[1]1339*	0.0000	0.0000	0.0000	0.0000	0.0000	0.0000
NBP[1]1432*	0.0000	0.0000	0.0000	0.0000	0.0000	0.0000
NBP[1]1528*	0.0000	0.0000	0.0000	0.0000	0.0000	0.0000
NBP[1]1637*	0.0000	0.0000	0.0000	0.0000	0.0000	0.0000
NBP[1]1732*	0.0000	0.0000	0.0000	0.0000	0.0000	0.0000

Licensed to: PETROCHEMICAL ENGINEERIN
* Specified by user.

Material Stream: Pandhi-Water (continued)

Fluid Package: Basis-1
Property Package: Peng-Robinson

COMPOSITION

Overall Phase (continued)

Vapour Fraction 0.0000

COMPONENTS	MOLAR FLOW (kgmole/h)	MOLE FRACTION	MASS FLOW (tonne/d)	MASS FRACTION	LIQUID VOLUME FLOW (m3/h)	LIQUID VOLUME FRACTION
NBP[1]1819*	0.0000	0.0000	0.0000	0.0000	0.0000	0.0000
NBP[1]1913*	0.0000	0.0000	0.0000	0.0000	0.0000	0.0000
Total	106.4368	1.0000	46.0643	1.0000	1.9239	1.0000

Vapour Phase

Phase Fraction 0.0000

COMPONENTS	MOLAR FLOW (kgmole/h)	MOLE FRACTION	MASS FLOW (tonne/d)	MASS FRACTION	LIQUID VOLUME FLOW (m3/h)	LIQUID VOLUME FRACTION
Methane	0.0000	0.7673	0.0000	0.5719	0.0000	0.6910
Ethane	0.0000	0.1010	0.0000	0.1412	0.0000	0.1436
Propane	0.0000	0.0488	0.0000	0.1000	0.0000	0.0714
i-Butane	0.0000	0.0058	0.0000	0.0156	0.0000	0.0100
n-Butane	0.0000	0.0106	0.0000	0.0285	0.0000	0.0177
i-Pentane	0.0000	0.0018	0.0000	0.0062	0.0000	0.0036
n-Pentane	0.0000	0.0019	0.0000	0.0064	0.0000	0.0037
n-Hexane	0.0000	0.0019	0.0000	0.0078	0.0000	0.0043
Nitrogen	0.0000	0.0211	0.0000	0.0274	0.0000	0.0123
CO2	0.0000	0.0335	0.0000	0.0685	0.0000	0.0300
H2S	0.0000	0.0000	0.0000	0.0000	0.0000	0.0000
H2O	0.0000	0.0012	0.0000	0.0010	0.0000	0.0004
NBP[1]95*	0.0000	0.0006	0.0000	0.0018	0.0000	0.0010
NBP[1]121*	0.0000	0.0006	0.0000	0.0020	0.0000	0.0010
NBP[1]147*	0.0000	0.0006	0.0000	0.0023	0.0000	0.0012
NBP[1]171*	0.0000	0.0010	0.0000	0.0039	0.0000	0.0020
NBP[1]195*	0.0000	0.0010	0.0000	0.0043	0.0000	0.0022
NBP[1]222*	0.0000	0.0005	0.0000	0.0026	0.0000	0.0013
NBP[1]248*	0.0000	0.0003	0.0000	0.0017	0.0000	0.0008
NBP[1]273*	0.0000	0.0002	0.0000	0.0010	0.0000	0.0005
NBP[1]299*	0.0000	0.0001	0.0000	0.0006	0.0000	0.0003
NBP[1]325*	0.0000	0.0001	0.0000	0.0003	0.0000	0.0001
NBP[1]351*	0.0000	0.0000	0.0000	0.0002	0.0000	0.0001
NBP[1]377*	0.0000	0.0000	0.0000	0.0001	0.0000	0.0001
NBP[1]402*	0.0000	0.0000	0.0000	0.0001	0.0000	0.0000
NBP[1]428*	0.0000	0.0000	0.0000	0.0000	0.0000	0.0000
NBP[1]454*	0.0000	0.0000	0.0000	0.0000	0.0000	0.0000
NBP[1]480*	0.0000	0.0000	0.0000	0.0000	0.0000	0.0000
NBP[1]505*	0.0000	0.0000	0.0000	0.0000	0.0000	0.0000
NBP[1]531*	0.0000	0.0000	0.0000	0.0000	0.0000	0.0000
NBP[1]557*	0.0000	0.0000	0.0000	0.0000	0.0000	0.0000
NBP[1]582*	0.0000	0.0000	0.0000	0.0000	0.0000	0.0000
NBP[1]608*	0.0000	0.0000	0.0000	0.0000	0.0000	0.0000
NBP[1]634*	0.0000	0.0000	0.0000	0.0000	0.0000	0.0000
NBP[1]659*	0.0000	0.0000	0.0000	0.0000	0.0000	0.0000
NBP[1]685*	0.0000	0.0000	0.0000	0.0000	0.0000	0.0000
NBP[1]711*	0.0000	0.0000	0.0000	0.0000	0.0000	0.0000
NBP[1]736*	0.0000	0.0000	0.0000	0.0000	0.0000	0.0000
NBP[1]762*	0.0000	0.0000	0.0000	0.0000	0.0000	0.0000
NBP[1]788*	0.0000	0.0000	0.0000	0.0000	0.0000	0.0000
NBP[1]825*	0.0000	0.0000	0.0000	0.0000	0.0000	0.0000
NBP[1]873*	0.0000	0.0000	0.0000	0.0000	0.0000	0.0000
NBP[1]926*	0.0000	0.0000	0.0000	0.0000	0.0000	0.0000
NBP[1]978*	0.0000	0.0000	0.0000	0.0000	0.0000	0.0000
NBP[1]1021*	0.0000	0.0000	0.0000	0.0000	0.0000	0.0000
NBP[1]1075*	0.0000	0.0000	0.0000	0.0000	0.0000	0.0000
NBP[1]1123*	0.0000	0.0000	0.0000	0.0000	0.0000	0.0000

* Specified by user.

Material Stream: Pandhi-Water (continued)

Fluid Package: Basis-1
Property Package: Peng-Robinson

COMPOSITION

Vapour Phase (continued)

Phase Fraction 0.0000

COMPONENTS	MOLAR FLOW (kgmole/h)	MOLE FRACTION	MASS FLOW (tonne/d)	MASS FRACTION	LIQUID VOLUME FLOW (m3/h)	LIQUID VOLUME FRACTION
NBP[1]1173*	0.0000	0.0000	0.0000	0.0000	0.0000	0.0000
NBP[1]1250*	0.0000	0.0000	0.0000	0.0000	0.0000	0.0000
NBP[1]1339*	0.0000	0.0000	0.0000	0.0000	0.0000	0.0000
NBP[1]1432*	0.0000	0.0000	0.0000	0.0000	0.0000	0.0000
NBP[1]1528*	0.0000	0.0000	0.0000	0.0000	0.0000	0.0000
NBP[1]1637*	0.0000	0.0000	0.0000	0.0000	0.0000	0.0000
NBP[1]1732*	0.0000	0.0000	0.0000	0.0003	0.0000	0.0001
NBP[1]1819*	0.0000	0.0000	0.0000	0.0019	0.0000	0.0006
NBP[1]1913*	0.0000	0.0000	0.0000	0.0023	0.0000	0.0008
Total	0.0000	1.0000	0.0000	1.0000	0.0000	1.0000

Liquid Phase

Phase Fraction 0.0000

COMPONENTS	MOLAR FLOW (kgmole/h)	MOLE FRACTION	MASS FLOW (tonne/d)	MASS FRACTION	LIQUID VOLUME FLOW (m3/h)	LIQUID VOLUME FRACTION
Methane	0.0000	0.2606	0.0000	0.0428	0.0000	0.1011
Ethane	0.0000	0.0983	0.0000	0.0303	0.0000	0.0601
Propane	0.0000	0.1038	0.0000	0.0469	0.0000	0.0654
i-Butane	0.0000	0.0217	0.0000	0.0129	0.0000	0.0162
n-Butane	0.0000	0.0494	0.0000	0.0294	0.0000	0.0356
i-Pentane	0.0000	0.0152	0.0000	0.0113	0.0000	0.0127
n-Pentane	0.0000	0.0190	0.0000	0.0141	0.0000	0.0158
n-Hexane	0.0000	0.0399	0.0000	0.0353	0.0000	0.0376
Nitrogen	0.0000	0.0037	0.0000	0.0010	0.0000	0.0009
CO2	0.0000	0.0242	0.0000	0.0109	0.0000	0.0093
H2S	0.0000	0.0000	0.0000	0.0000	0.0000	0.0000
H2O	0.0000	0.0009	0.0000	0.0002	0.0000	0.0001
NBP[1]95*	0.0000	0.0057	0.0000	0.0040	0.0000	0.0041
NBP[1]121*	0.0000	0.0077	0.0000	0.0058	0.0000	0.0059
NBP[1]147*	0.0000	0.0112	0.0000	0.0092	0.0000	0.0093
NBP[1]171*	0.0000	0.0238	0.0000	0.0214	0.0000	0.0212
NBP[1]195*	0.0000	0.0339	0.0000	0.0325	0.0000	0.0319
NBP[1]222*	0.0000	0.0273	0.0000	0.0282	0.0000	0.0273
NBP[1]248*	0.0000	0.0240	0.0000	0.0267	0.0000	0.0255
NBP[1]273*	0.0000	0.0202	0.0000	0.0239	0.0000	0.0226
NBP[1]299*	0.0000	0.0163	0.0000	0.0206	0.0000	0.0192
NBP[1]325*	0.0000	0.0120	0.0000	0.0162	0.0000	0.0150
NBP[1]351*	0.0000	0.0099	0.0000	0.0142	0.0000	0.0130
NBP[1]377*	0.0000	0.0092	0.0000	0.0140	0.0000	0.0127
NBP[1]402*	0.0000	0.0085	0.0000	0.0137	0.0000	0.0124
NBP[1]428*	0.0000	0.0081	0.0000	0.0140	0.0000	0.0125
NBP[1]454*	0.0000	0.0081	0.0000	0.0150	0.0000	0.0132
NBP[1]480*	0.0000	0.0082	0.0000	0.0163	0.0000	0.0142
NBP[1]505*	0.0000	0.0080	0.0000	0.0168	0.0000	0.0145
NBP[1]531*	0.0000	0.0077	0.0000	0.0173	0.0000	0.0148
NBP[1]557*	0.0000	0.0074	0.0000	0.0177	0.0000	0.0150
NBP[1]582*	0.0000	0.0071	0.0000	0.0180	0.0000	0.0151
NBP[1]608*	0.0000	0.0068	0.0000	0.0184	0.0000	0.0153
NBP[1]634*	0.0000	0.0067	0.0000	0.0191	0.0000	0.0158
NBP[1]659*	0.0000	0.0066	0.0000	0.0199	0.0000	0.0163
NBP[1]685*	0.0000	0.0068	0.0000	0.0217	0.0000	0.0177
NBP[1]711*	0.0000	0.0071	0.0000	0.0239	0.0000	0.0193
NBP[1]736*	0.0000	0.0071	0.0000	0.0247	0.0000	0.0198
NBP[1]762*	0.0000	0.0069	0.0000	0.0252	0.0000	0.0201
NBP[1]788*	0.0000	0.0066	0.0000	0.0256	0.0000	0.0203

* Specified by user.

Material Stream: Pandhi-Water (continued)

Fluid Package: Basis-1
Property Package: Peng-Robinson

COMPOSITION

Liquid Phase (continued)

Phase Fraction 0.0000

COMPONENTS	MOLAR FLOW (kgmole/h)	MOLE FRACTION	MASS FLOW (tonne/d)	MASS FRACTION	LIQUID VOLUME FLOW (m3/h)	LIQUID VOLUME FRACTION
NBP[1]825*	0.0000	0.0110	0.0000	0.0461	0.0000	0.0361
NBP[1]873*	0.0000	0.0076	0.0000	0.0345	0.0000	0.0267
NBP[1]926*	0.0000	0.0060	0.0000	0.0292	0.0000	0.0224
NBP[1]978*	0.0000	0.0061	0.0000	0.0329	0.0000	0.0248
NBP[1]1021*	0.0000	0.0030	0.0000	0.0171	0.0000	0.0128
NBP[1]1075*	0.0000	0.0019	0.0000	0.0112	0.0000	0.0083
NBP[1]1123*	0.0000	0.0017	0.0000	0.0111	0.0000	0.0082
NBP[1]1173*	0.0000	0.0012	0.0000	0.0085	0.0000	0.0062
NBP[1]1250*	0.0000	0.0016	0.0000	0.0120	0.0000	0.0086
NBP[1]1339*	0.0000	0.0015	0.0000	0.0124	0.0000	0.0088
NBP[1]1432*	0.0000	0.0011	0.0000	0.0096	0.0000	0.0067
NBP[1]1528*	0.0000	0.0007	0.0000	0.0072	0.0000	0.0050
NBP[1]1637*	0.0000	0.0005	0.0000	0.0054	0.0000	0.0037
NBP[1]1732*	0.0000	0.0004	0.0000	0.0039	0.0000	0.0026
NBP[1]1819*	0.0000	0.0000	0.0000	0.0000	0.0000	0.0000
NBP[1]1913*	0.0000	0.0000	0.0000	0.0000	0.0000	0.0000
Total	0.0000	1.0000	0.0000	1.0000	0.0000	1.0000

Phase Fraction

COMPONENTS	MOLAR FLOW	MOLE FRACTION	MASS FLOW	MASS FRACTION	LIQUID VOLUME FLOW	LIQUID VOLUME FRACTION

* Specified by user.

Material Stream: Pandhi-Water (continued)

Fluid Package: Basis-1
Property Package: Peng-Robinson

COMPOSITION

COMPONENTS	MOLAR FLOW	MOLE FRACTION	MASS FLOW	MASS FRACTION	LIQUID VOLUME FLOW	Phase Fraction LIQUID VOLUME FRACTION
Total		1.0000		1.0000		1.0000

Material Stream: permeate

Fluid Package: Basis-1
Property Package: Peng-Robinson

CONDITIONS

		Overall	Vapour Phase			
Vapour / Phase Fraction		1.0000	1.0000			
Temperature:	(F)	100.0 *	100.0			
Pressure:	(psig)	20.00 *	20.00			
Molar Flow	(MMSCFD)	2.810 *	2.810			
Mass Flow	(tonne/d)	76.19	76.19			
Std Ideal Liq Vol Flow	(barrel/day)	1140	1140			
Molar Enthalpy	(kJ/kgmole)	-1.319e+005	-1.319e+005			
Molar Entropy	(kJ/kgmole-C)	181.4	181.4			
Heat Flow	(MMBtu/hr)	-17.50	-17.50			
Liq Vol Flow @Std Cond	(barrel/day)	4.980e+005 *	4.980e+005			

PROPERTIES

		Overall	Vapour Phase			
Molecular Weight		22.68	22.68			
Molar Density	(kgmole/m3)	9.306e-002	9.306e-002			
Mass Density	(kg/m3)	2.111	2.111			
Act. Volume Flow	(barrel/day)	2.270e+005	2.270e+005			
Mass Enthalpy	(kJ/kg)	-5817	-5817			
Mass Entropy	(kJ/kg-C)	7.998	7.998			
Heat Capacity	(kJ/kgmole-C)	37.74	37.74			
Mass Heat Capacity	(kJ/kg-C)	1.664	1.664			
LHV Molar Basis (Std)	(Btu/SCF)	727.1	727.1			
LHV Mass Basis (Std)	(kJ/kg)	2.829e+004	2.829e+004			
Phase Fraction [Vol. Basis]		1.000	1.000			

* Specified by user.

Material Stream: permeate (continued)

Fluid Package: Basis-1
Property Package: Peng-Robinson

PROPERTIES

	Overall	Vapour Phase			
Phase Fraction [Mass Basis]	1.000	1.000			
Partial Pressure of CO2 (psig)	-8.100	---			
Cost Based on Flow (Cost/s)	0.0000	0.0000			
Act. Gas Flow (ACT_m3/h)	1504	1504			
Avg. Liq. Density (kgmole/m3)	18.53	18.53			
Specific Heat (kJ/kgmole-C)	37.74	37.74			
Std. Gas Flow (STD_m3/h)	3309	3309			
Std. Ideal Liq. Mass Density (kg/m3)	420.3	420.3			
Act. Liq. Flow (barrel/day)	---	---			
Z Factor	0.9944	0.9944			
Watson K	14.59	14.59			
User Property	---	---			
Partial Pressure of H2S (psig)	-14.70	---			
Cp/(Cp - R)	1.283	1.283			
Cp/Cv	1.292	1.292			
Heat of Vap. (kJ/kgmole)	1.372e+004	---			
Kinematic Viscosity (cSt)	5.993	5.993			
Liq. Mass Density (Std. Cond) (kg/m3)	0.9622	0.9622			
Liq. Vol. Flow (Std. Cond) (barrel/day)	4.980e+005	4.980e+005			
Liquid Fraction	0.0000	0.0000			
Molar Volume (m3/kgmole)	10.75	10.75			
Mass Heat of Vap. (kJ/kg)	604.9	---			
Phase Fraction [Molar Basis]	1.0000	1.0000			
Surface Tension (dyne/cm)	---	---			
Thermal Conductivity (W/m-K)	3.032e-002	3.032e-002			
Viscosity (cP)	1.265e-002	1.265e-002			
Cv (Semi-Ideal) (kJ/kgmole-C)	29.43	29.43			
Mass Cv (Semi-Ideal) (kJ/kg-C)	1.297	1.297			
Cv (kJ/kgmole-C)	29.20	29.20			
Mass Cv (kJ/kg-C)	1.288	1.288			
Cv (Ent. Method) (kJ/kgmole-C)	---	---			
Mass Cv (Ent. Method) (kJ/kg-C)	---	---			
Cp/Cv (Ent. Method)	---	---			
Reid VP at 37.8 C (psig)	---	---			
True VP at 37.8 C (psig)	---	---			
Liq. Vol. Flow - Sum(Std. Cond) (barrel/day)	4.980e+005	4.980e+005			
HHV Molar Basis (Std) (Btu/SCF)	800.0	800.0			
HHV Mass Basis (Std) (kJ/kg)	3.113e+004	3.113e+004			
CO2 Loading	---	---			
CO2 App ML Con (kgmole/m3)	---	---			
CO2 App WT Con (kgmol/kg)	---	---			
Phase Fraction [Act. Vol. Basis]	1.000	1.000			
Mass Exergy (kJ/kg)	93.92	---			
Viscosity Index	-9.135	---			
Ideal Gas Cp/Cv	1.285	1.285			
Ideal Gas Cp (kJ/kgmole-C)	37.49	37.49			
Mass Ideal Gas Cp (kJ/kg-C)	1.653	1.653			
Bubble Point Pressure (psig)	---	---			

COMPOSITION

Overall Phase

Vapour Fraction 1.0000

COMPONENTS	MOLAR FLOW (kgmole/h)	MOLE FRACTION	MASS FLOW (tonne/d)	MASS FRACTION	LIQUID VOLUME FLOW (m3/h)	LIQUID VOLUME FRACTION
Methane	100.4480 *	0.7177 *	38.6754 *	0.5076 *	5.3825 *	0.7126 *
Ethane	5.2335 *	0.0374 *	3.7769 *	0.0496 *	0.4424 *	0.0586 *
Propane	0.3663 *	0.0026 *	0.3877 *	0.0051 *	0.0319 *	0.0042 *

* Specified by user.

Material Stream: permeate (continued)

Fluid Package: Basis-1
Property Package: Peng-Robinson

COMPOSITION

Overall Phase (continued)

Vapour Fraction 1.0000

COMPONENTS	MOLAR FLOW (kgmole/h)	MOLE FRACTION	MASS FLOW (tonne/d)	MASS FRACTION	LIQUID VOLUME FLOW (m3/h)	LIQUID VOLUME FRACTION
i-Butane	0.0209 *	0.0001 *	0.0292 *	0.0004 *	0.0022 *	0.0003 *
n-Butane	0.0209 *	0.0001 *	0.0292 *	0.0004 *	0.0021 *	0.0003 *
i-Pentane	0.0105 *	0.0001 *	0.0181 *	0.0002 *	0.0012 *	0.0002 *
n-Pentane	0.0000 *	0.0000 *	0.0000 *	0.0000 *	0.0000 *	0.0000 *
n-Hexane	0.2093 *	0.0015 *	0.4330 *	0.0057 *	0.0272 *	0.0036 *
Nitrogen	7.0412 *	0.0503 *	4.7339 *	0.0621 *	0.2446 *	0.0324 *
CO2	26.6072 *	0.1901 *	28.1034 *	0.3689 *	1.4188 *	0.1878 *
H2S	0.0000 *	0.0000 *	0.0000 *	0.0000 *	0.0000 *	0.0000 *
H2O	0.0000 *	0.0000 *	0.0000 *	0.0000 *	0.0000 *	0.0000 *
NBP[1]95*	0.0000 *	0.0000 *	0.0000 *	0.0000 *	0.0000 *	0.0000 *
NBP[1]121*	0.0000 *	0.0000 *	0.0000 *	0.0000 *	0.0000 *	0.0000 *
NBP[1]147*	0.0000 *	0.0000 *	0.0000 *	0.0000 *	0.0000 *	0.0000 *
NBP[1]171*	0.0000 *	0.0000 *	0.0000 *	0.0000 *	0.0000 *	0.0000 *
NBP[1]195*	0.0000 *	0.0000 *	0.0000 *	0.0000 *	0.0000 *	0.0000 *
NBP[1]222*	0.0000 *	0.0000 *	0.0000 *	0.0000 *	0.0000 *	0.0000 *
NBP[1]248*	0.0000 *	0.0000 *	0.0000 *	0.0000 *	0.0000 *	0.0000 *
NBP[1]273*	0.0000 *	0.0000 *	0.0000 *	0.0000 *	0.0000 *	0.0000 *
NBP[1]299*	0.0000 *	0.0000 *	0.0000 *	0.0000 *	0.0000 *	0.0000 *
NBP[1]325*	0.0000 *	0.0000 *	0.0000 *	0.0000 *	0.0000 *	0.0000 *
NBP[1]351*	0.0000 *	0.0000 *	0.0000 *	0.0000 *	0.0000 *	0.0000 *
NBP[1]377*	0.0000 *	0.0000 *	0.0000 *	0.0000 *	0.0000 *	0.0000 *
NBP[1]402*	0.0000 *	0.0000 *	0.0000 *	0.0000 *	0.0000 *	0.0000 *
NBP[1]428*	0.0000 *	0.0000 *	0.0000 *	0.0000 *	0.0000 *	0.0000 *
NBP[1]454*	0.0000 *	0.0000 *	0.0000 *	0.0000 *	0.0000 *	0.0000 *
NBP[1]480*	0.0000 *	0.0000 *	0.0000 *	0.0000 *	0.0000 *	0.0000 *
NBP[1]505*	0.0000 *	0.0000 *	0.0000 *	0.0000 *	0.0000 *	0.0000 *
NBP[1]531*	0.0000 *	0.0000 *	0.0000 *	0.0000 *	0.0000 *	0.0000 *
NBP[1]557*	0.0000 *	0.0000 *	0.0000 *	0.0000 *	0.0000 *	0.0000 *
NBP[1]582*	0.0000 *	0.0000 *	0.0000 *	0.0000 *	0.0000 *	0.0000 *
NBP[1]608*	0.0000 *	0.0000 *	0.0000 *	0.0000 *	0.0000 *	0.0000 *
NBP[1]634*	0.0000 *	0.0000 *	0.0000 *	0.0000 *	0.0000 *	0.0000 *
NBP[1]659*	0.0000 *	0.0000 *	0.0000 *	0.0000 *	0.0000 *	0.0000 *
NBP[1]685*	0.0000 *	0.0000 *	0.0000 *	0.0000 *	0.0000 *	0.0000 *
NBP[1]711*	0.0000 *	0.0000 *	0.0000 *	0.0000 *	0.0000 *	0.0000 *
NBP[1]736*	0.0000 *	0.0000 *	0.0000 *	0.0000 *	0.0000 *	0.0000 *
NBP[1]762*	0.0000 *	0.0000 *	0.0000 *	0.0000 *	0.0000 *	0.0000 *
NBP[1]788*	0.0000 *	0.0000 *	0.0000 *	0.0000 *	0.0000 *	0.0000 *
NBP[1]825*	0.0000 *	0.0000 *	0.0000 *	0.0000 *	0.0000 *	0.0000 *
NBP[1]873*	0.0000 *	0.0000 *	0.0000 *	0.0000 *	0.0000 *	0.0000 *
NBP[1]926*	0.0000 *	0.0000 *	0.0000 *	0.0000 *	0.0000 *	0.0000 *
NBP[1]978*	0.0000 *	0.0000 *	0.0000 *	0.0000 *	0.0000 *	0.0000 *
NBP[1]1021*	0.0000 *	0.0000 *	0.0000 *	0.0000 *	0.0000 *	0.0000 *
NBP[1]1075*	0.0000 *	0.0000 *	0.0000 *	0.0000 *	0.0000 *	0.0000 *
NBP[1]1123*	0.0000 *	0.0000 *	0.0000 *	0.0000 *	0.0000 *	0.0000 *
NBP[1]1173*	0.0000 *	0.0000 *	0.0000 *	0.0000 *	0.0000 *	0.0000 *
NBP[1]1250*	0.0000 *	0.0000 *	0.0000 *	0.0000 *	0.0000 *	0.0000 *
NBP[1]1339*	0.0000 *	0.0000 *	0.0000 *	0.0000 *	0.0000 *	0.0000 *
NBP[1]1432*	0.0000 *	0.0000 *	0.0000 *	0.0000 *	0.0000 *	0.0000 *
NBP[1]1528*	0.0000 *	0.0000 *	0.0000 *	0.0000 *	0.0000 *	0.0000 *
NBP[1]1637*	0.0000 *	0.0000 *	0.0000 *	0.0000 *	0.0000 *	0.0000 *
NBP[1]1732*	0.0000 *	0.0000 *	0.0000 *	0.0000 *	0.0000 *	0.0000 *
NBP[1]1819*	0.0000 *	0.0000 *	0.0000 *	0.0000 *	0.0000 *	0.0000 *
NBP[1]1913*	0.0000 *	0.0000 *	0.0000 *	0.0000 *	0.0000 *	0.0000 *
Total	139.9579	1.0000	76.1868	1.0000	7.5529	1.0000

* Specified by user.

Material Stream: permeate (continued)

Fluid Package: Basis-1
Property Package: Peng-Robinson

COMPOSITION

Vapour Phase

Phase Fraction 1.000

COMPONENTS	MOLAR FLOW (kgmole/h)	MOLE FRACTION	MASS FLOW (tonne/d)	MASS FRACTION	LIQUID VOLUME FLOW (m3/h)	LIQUID VOLUME FRACTION
Methane	100.4480	0.7177	38.6754	0.5076	5.3825	0.7126
Ethane	5.2335	0.0374	3.7769	0.0496	0.4424	0.0586
Propane	0.3663	0.0026	0.3877	0.0051	0.0319	0.0042
i-Butane	0.0209	0.0001	0.0292	0.0004	0.0022	0.0003
n-Butane	0.0209	0.0001	0.0292	0.0004	0.0021	0.0003
i-Pentane	0.0105	0.0001	0.0181	0.0002	0.0012	0.0002
n-Pentane	0.0000	0.0000	0.0000	0.0000	0.0000	0.0000
n-Hexane	0.2093	0.0015	0.4330	0.0057	0.0272	0.0036
Nitrogen	7.0412	0.0503	4.7339	0.0621	0.2446	0.0324
CO2	26.6072	0.1901	28.1034	0.3689	1.4188	0.1878
H2S	0.0000	0.0000	0.0000	0.0000	0.0000	0.0000
H2O	0.0000	0.0000	0.0000	0.0000	0.0000	0.0000
NBP[1]95*	0.0000	0.0000	0.0000	0.0000	0.0000	0.0000
NBP[1]121*	0.0000	0.0000	0.0000	0.0000	0.0000	0.0000
NBP[1]147*	0.0000	0.0000	0.0000	0.0000	0.0000	0.0000
NBP[1]171*	0.0000	0.0000	0.0000	0.0000	0.0000	0.0000
NBP[1]195*	0.0000	0.0000	0.0000	0.0000	0.0000	0.0000
NBP[1]222*	0.0000	0.0000	0.0000	0.0000	0.0000	0.0000
NBP[1]248*	0.0000	0.0000	0.0000	0.0000	0.0000	0.0000
NBP[1]273*	0.0000	0.0000	0.0000	0.0000	0.0000	0.0000
NBP[1]299*	0.0000	0.0000	0.0000	0.0000	0.0000	0.0000
NBP[1]325*	0.0000	0.0000	0.0000	0.0000	0.0000	0.0000
NBP[1]351*	0.0000	0.0000	0.0000	0.0000	0.0000	0.0000
NBP[1]377*	0.0000	0.0000	0.0000	0.0000	0.0000	0.0000
NBP[1]402*	0.0000	0.0000	0.0000	0.0000	0.0000	0.0000
NBP[1]428*	0.0000	0.0000	0.0000	0.0000	0.0000	0.0000
NBP[1]454*	0.0000	0.0000	0.0000	0.0000	0.0000	0.0000
NBP[1]480*	0.0000	0.0000	0.0000	0.0000	0.0000	0.0000
NBP[1]505*	0.0000	0.0000	0.0000	0.0000	0.0000	0.0000
NBP[1]531*	0.0000	0.0000	0.0000	0.0000	0.0000	0.0000
NBP[1]557*	0.0000	0.0000	0.0000	0.0000	0.0000	0.0000
NBP[1]582*	0.0000	0.0000	0.0000	0.0000	0.0000	0.0000
NBP[1]608*	0.0000	0.0000	0.0000	0.0000	0.0000	0.0000
NBP[1]634*	0.0000	0.0000	0.0000	0.0000	0.0000	0.0000
NBP[1]659*	0.0000	0.0000	0.0000	0.0000	0.0000	0.0000
NBP[1]685*	0.0000	0.0000	0.0000	0.0000	0.0000	0.0000
NBP[1]711*	0.0000	0.0000	0.0000	0.0000	0.0000	0.0000
NBP[1]736*	0.0000	0.0000	0.0000	0.0000	0.0000	0.0000
NBP[1]762*	0.0000	0.0000	0.0000	0.0000	0.0000	0.0000
NBP[1]788*	0.0000	0.0000	0.0000	0.0000	0.0000	0.0000
NBP[1]825*	0.0000	0.0000	0.0000	0.0000	0.0000	0.0000
NBP[1]873*	0.0000	0.0000	0.0000	0.0000	0.0000	0.0000
NBP[1]926*	0.0000	0.0000	0.0000	0.0000	0.0000	0.0000
NBP[1]978*	0.0000	0.0000	0.0000	0.0000	0.0000	0.0000
NBP[1]1021*	0.0000	0.0000	0.0000	0.0000	0.0000	0.0000
NBP[1]1075*	0.0000	0.0000	0.0000	0.0000	0.0000	0.0000
NBP[1]1123*	0.0000	0.0000	0.0000	0.0000	0.0000	0.0000
NBP[1]1173*	0.0000	0.0000	0.0000	0.0000	0.0000	0.0000
NBP[1]1250*	0.0000	0.0000	0.0000	0.0000	0.0000	0.0000
NBP[1]1339*	0.0000	0.0000	0.0000	0.0000	0.0000	0.0000
NBP[1]1432*	0.0000	0.0000	0.0000	0.0000	0.0000	0.0000
NBP[1]1528*	0.0000	0.0000	0.0000	0.0000	0.0000	0.0000
NBP[1]1637*	0.0000	0.0000	0.0000	0.0000	0.0000	0.0000
NBP[1]1732*	0.0000	0.0000	0.0000	0.0000	0.0000	0.0000

* Specified by user.

Material Stream: permeate (continued)

Fluid Package: Basis-1
Property Package: Peng-Robinson

COMPOSITION

Vapour Phase (continued)

Phase Fraction 1.000

COMPONENTS	MOLAR FLOW (kgmole/h)	MOLE FRACTION	MASS FLOW (tonne/d)	MASS FRACTION	LIQUID VOLUME FLOW (m3/h)	LIQUID VOLUME FRACTION
NBP[1]1819*	0.0000	0.0000	0.0000	0.0000	0.0000	0.0000
NBP[1]1913*	0.0000	0.0000	0.0000	0.0000	0.0000	0.0000
Total	139.9579	1.0000	76.1868	1.0000	7.5529	1.0000

Material Stream: Sep gas

Fluid Package: Basis-1
Property Package: Peng-Robinson

CONDITIONS

		Overall	Vapour Phase	Liquid Phase	Aqueous Phase
Vapour / Phase Fraction		0.9998	0.9998	0.0002	0.0000
Temperature:	(F)	102.6	102.6	102.6	102.6
Pressure:	(psig)	1230	1230	1230	1230
Molar Flow	(MMSCFD)	5.254	5.253	8.638e-004	0.0000
Mass Flow	(tonne/d)	135.2	134.5	0.6220	0.0000
Std Ideal Liq Vol Flow	(barrel/day)	2350	2347	3.766	0.0000
Molar Enthalpy	(kJ/kgmole)	-9.030e+004	-9.010e+004	-1.294e+006	-2.850e+005
Molar Entropy	(kJ/kgmole-C)	149.2	149.0	1451	57.28
Heat Flow	(MMBtu/hr)	-22.40	-22.34	-5.275e-002	0.0000
Liq Vol Flow @Std Cond	(barrel/day)	9.302e+005 *	9.301e+005	3.950	0.0000

PROPERTIES

		Overall	Vapour Phase	Liquid Phase	Aqueous Phase
Molecular Weight		21.52	21.43	602.4	18.03
Molar Density	(kgmole/m3)	4.267	4.268	1.621	46.72
Mass Density	(kg/m3)	91.83	91.45	976.2	842.5
Act. Volume Flow	(barrel/day)	9257	9253	4.007	0.0000
Mass Enthalpy	(kJ/kg)	-4196	-4205	-2148	-1.581e+004
Mass Entropy	(kJ/kg-C)	6.931	6.952	2.409	3.177
Heat Capacity	(kJ/kgmole-C)	60.00	59.81	1185	77.55
Mass Heat Capacity	(kJ/kg-C)	2.788	2.791	1.967	4.301
LHV Molar Basis (Std)	(Btu/SCF)	---	---	---	6.495e-004
LHV Mass Basis (Std)	(kJ/kg)	---	---	---	3.179e-002
Phase Fraction [Vol. Basis]		0.9984	0.9984	1.602e-003	---
Phase Fraction [Mass Basis]		0.9954	0.9954	4.602e-003	0.0000
Partial Pressure of CO2	(psig)	26.98	---	---	---
Cost Based on Flow	(Cost/s)	0.0000	0.0000	0.0000	0.0000
Act. Gas Flow	(ACT_m3/h)	61.30	61.30	---	---
Avg. Liq. Density	(kgmole/m3)	16.81	16.83	1.724	55.32
Specific Heat	(kJ/kgmole-C)	60.00	59.81	1185	77.55
Std. Gas Flow	(STD_m3/h)	6187	6186	1.017	0.0000
Std. Ideal Liq. Mass Density	(kg/m3)	361.7	360.6	1039	997.6
Act. Liq. Flow	(barrel/day)	4.007	---	4.007	0.0000
Z Factor		---	0.7741	2.039	7.072e-002
Watson K		17.21	17.25	11.55	8.487
User Property		---	---	---	---
Partial Pressure of H2S	(psig)	-14.69	---	---	---
Cp/(Cp - R)		1.161	1.161	1.007	1.120
Cp/Cv		1.675	1.679	1.066	1.153
Heat of Vap.	(kJ/kgmole)	2.109e+004	---	---	---
Kinematic Viscosity	(cSt)	---	0.1661	2011	0.7844
Liq. Mass Density (Std. Cond)	(kg/m3)	0.9139	0.9098	990.5	1015
Liq. Vol. Flow (Std. Cond)	(barrel/day)	9.302e+005	9.301e+005	3.950	0.0000
Liquid Fraction		1.644e-004	0.0000	1.000	1.000
Molar Volume	(m3/kgmole)	0.2344	0.2343	0.6170	2.140e-002

* Specified by user.

Material Stream: Sep gas (continued)

Fluid Package: Basis-1
Property Package: Peng-Robinson

PROPERTIES

		Overall	Vapour Phase	Liquid Phase	Aqueous Phase
Mass Heat of Vap.	(kJ/kg)	980.1	---	---	---
Phase Fraction [Molar Basis]		0.9998	0.9998	0.0002	0.0000
Surface Tension	(dyne/cm)	13.08	---	13.08	69.58
Thermal Conductivity	(W/m-K)	---	4.117e-002	0.1089	0.6306
Viscosity	(cP)	---	1.519e-002	1963	0.6608
Cv (Semi-Ideal)	(kJ/kgmole-C)	51.68	51.50	1177	69.24
Mass Cv (Semi-Ideal)	(kJ/kg-C)	2.401	2.403	1.953	3.840
Cv	(kJ/kgmole-C)	35.82	35.63	1111	67.25
Mass Cv	(kJ/kg-C)	1.664	1.663	1.845	3.729
Cv (Ent. Method)	(kJ/kgmole-C)	35.82	35.64	1131	---
Mass Cv (Ent. Method)	(kJ/kg-C)	1.665	1.663	1.878	---
Cp/Cv (Ent. Method)		1.675	1.678	1.047	---
Reid VP at 37.8 C	(psig)	---	---	55.70	---
True VP at 37.8 C	(psig)	2761	---	1226	117.6
Liq. Vol. Flow - Sum(Std. Cond)	(barrel/day)	9.301e+005	9.301e+005	3.950	0.0000
HHV Molar Basis (Std)	(Btu/SCF)	---	---	---	46.43
HHV Mass Basis (Std)	(kJ/kg)	---	---	---	2273
CO2 Loading		---	---	---	---
CO2 App ML Con	(kgmole/m3)	---	---	4.387e-002	---
CO2 App WT Con	(kgmol/kg)	---	---	4.494e-005	---
Phase Fraction [Act. Vol. Basis]		0.9996	0.9996	4.329e-004	0.0000
Mass Exergy	(kJ/kg)	479.0	---	---	---
Viscosity Index		---	---	---	---
Ideal Gas Cp/Cv		1.243	1.244	1.009	1.328
Ideal Gas Cp	(kJ/kgmole-C)	42.57	42.41	985.3	33.66
Mass Ideal Gas Cp	(kJ/kg-C)	1.978	1.979	1.636	1.867
Bubble Point Pressure	(psig)	3686	---	---	---

COMPOSITION

Overall Phase

Vapour Fraction 0.9998

COMPONENTS	MOLAR FLOW (kgmole/h)	MOLE FRACTION	MASS FLOW (tonne/d)	MASS FRACTION	LIQUID VOLUME FLOW (m3/h)	LIQUID VOLUME FRACTION
Methane	200.7774	0.7673	77.3053	0.5719	10.7586	0.6910
Ethane	26.4378	0.1010	19.0796	0.1412	2.2351	0.1436
Propane	12.7724	0.0488	13.5174	0.1000	1.1116	0.0714
i-Butane	1.5077	0.0058	2.1032	0.0156	0.1559	0.0100
n-Butane	2.7640	0.0106	3.8558	0.0285	0.2755	0.0177
i-Pentane	0.4836	0.0018	0.8374	0.0062	0.0560	0.0036
n-Pentane	0.5028	0.0019	0.8706	0.0064	0.0576	0.0037
n-Hexane	0.5091	0.0019	1.0530	0.0078	0.0662	0.0043
Nitrogen	5.5090	0.0211	3.7038	0.0274	0.1914	0.0123
CO2	8.7617	0.0335	9.2544	0.0685	0.4672	0.0300
H2S	0.0005	0.0000	0.0004	0.0000	0.0000	0.0000
H2O	0.3135	0.0012	0.1355	0.0010	0.0057	0.0004
NBP[1]95*	0.1517	0.0006	0.2472	0.0018	0.0152	0.0010
NBP[1]121*	0.1523	0.0006	0.2663	0.0020	0.0161	0.0010
NBP[1]147*	0.1609	0.0006	0.3097	0.0023	0.0184	0.0012
NBP[1]171*	0.2500	0.0010	0.5261	0.0039	0.0308	0.0020
NBP[1]195*	0.2605	0.0010	0.5849	0.0043	0.0338	0.0022
NBP[1]222*	0.1438	0.0005	0.3474	0.0026	0.0199	0.0013
NBP[1]248*	0.0876	0.0003	0.2275	0.0017	0.0128	0.0008
NBP[1]273*	0.0505	0.0002	0.1402	0.0010	0.0078	0.0005
NBP[1]299*	0.0276	0.0001	0.0817	0.0006	0.0045	0.0003
NBP[1]325*	0.0135	0.0001	0.0425	0.0003	0.0023	0.0001
NBP[1]351*	0.0073	0.0000	0.0243	0.0002	0.0013	0.0001
NBP[1]377*	0.0043	0.0000	0.0152	0.0001	0.0008	0.0001

* Specified by user.

Material Stream: Sep gas (continued)

Fluid Package: Basis-1
Property Package: Peng-Robinson

COMPOSITION

Overall Phase (continued)

Vapour Fraction 0.9998

COMPONENTS	MOLAR FLOW (kgmole/h)	MOLE FRACTION	MASS FLOW (tonne/d)	MASS FRACTION	LIQUID VOLUME FLOW (m3/h)	LIQUID VOLUME FRACTION
NBP[1]402*	0.0025	0.0000	0.0094	0.0001	0.0005	0.0000
NBP[1]428*	0.0015	0.0000	0.0060	0.0000	0.0003	0.0000
NBP[1]454*	0.0009	0.0000	0.0039	0.0000	0.0002	0.0000
NBP[1]480*	0.0005	0.0000	0.0025	0.0000	0.0001	0.0000
NBP[1]505*	0.0003	0.0000	0.0015	0.0000	0.0001	0.0000
NBP[1]531*	0.0002	0.0000	0.0009	0.0000	0.0000	0.0000
NBP[1]557*	0.0001	0.0000	0.0005	0.0000	0.0000	0.0000
NBP[1]582*	0.0001	0.0000	0.0003	0.0000	0.0000	0.0000
NBP[1]608*	0.0000	0.0000	0.0002	0.0000	0.0000	0.0000
NBP[1]634*	0.0000	0.0000	0.0001	0.0000	0.0000	0.0000
NBP[1]659*	0.0000	0.0000	0.0000	0.0000	0.0000	0.0000
NBP[1]685*	0.0000	0.0000	0.0000	0.0000	0.0000	0.0000
NBP[1]711*	0.0000	0.0000	0.0000	0.0000	0.0000	0.0000
NBP[1]736*	0.0000	0.0000	0.0000	0.0000	0.0000	0.0000
NBP[1]762*	0.0000	0.0000	0.0000	0.0000	0.0000	0.0000
NBP[1]788*	0.0000	0.0000	0.0000	0.0000	0.0000	0.0000
NBP[1]825*	0.0000	0.0000	0.0000	0.0000	0.0000	0.0000
NBP[1]873*	0.0000	0.0000	0.0000	0.0000	0.0000	0.0000
NBP[1]926*	0.0000	0.0000	0.0000	0.0000	0.0000	0.0000
NBP[1]978*	0.0000	0.0000	0.0000	0.0000	0.0000	0.0000
NBP[1]1021*	0.0000	0.0000	0.0000	0.0000	0.0000	0.0000
NBP[1]1075*	0.0000	0.0000	0.0000	0.0000	0.0000	0.0000
NBP[1]1123*	0.0000	0.0000	0.0000	0.0000	0.0000	0.0000
NBP[1]1173*	0.0000	0.0000	0.0000	0.0000	0.0000	0.0000
NBP[1]1250*	0.0000	0.0000	0.0000	0.0000	0.0000	0.0000
NBP[1]1339*	0.0000	0.0000	0.0000	0.0000	0.0000	0.0000
NBP[1]1432*	0.0000	0.0000	0.0000	0.0000	0.0000	0.0000
NBP[1]1528*	0.0000	0.0000	0.0000	0.0000	0.0000	0.0000
NBP[1]1637*	0.0000	0.0000	0.0000	0.0000	0.0000	0.0000
NBP[1]1732*	0.0014	0.0000	0.0344	0.0003	0.0014	0.0001
NBP[1]1819*	0.0097	0.0000	0.2590	0.0019	0.0101	0.0006
NBP[1]1913*	0.0112	0.0000	0.3148	0.0023	0.0121	0.0008
Total	261.6777	1.0000	135.1629	1.0000	15.5694	1.0000

Vapour Phase

Phase Fraction 0.9998

COMPONENTS	MOLAR FLOW (kgmole/h)	MOLE FRACTION	MASS FLOW (tonne/d)	MASS FRACTION	LIQUID VOLUME FLOW (m3/h)	LIQUID VOLUME FRACTION
Methane	200.7644	0.7673	77.3002	0.5745	10.7579	0.6921
Ethane	26.4353	0.1010	19.0777	0.1418	2.2349	0.1438
Propane	12.7707	0.0488	13.5156	0.1005	1.1115	0.0715
i-Butane	1.5074	0.0058	2.1028	0.0156	0.1559	0.0100
n-Butane	2.7635	0.0106	3.8550	0.0287	0.2754	0.0177
i-Pentane	0.4834	0.0018	0.8371	0.0062	0.0559	0.0036
n-Pentane	0.5026	0.0019	0.8704	0.0065	0.0576	0.0037
n-Hexane	0.5089	0.0019	1.0526	0.0078	0.0662	0.0043
Nitrogen	5.5087	0.0211	3.7035	0.0275	0.1914	0.0123
CO2	8.7605	0.0335	9.2531	0.0688	0.4671	0.0301
H2S	0.0005	0.0000	0.0004	0.0000	0.0000	0.0000
H2O	0.3134	0.0012	0.1355	0.0010	0.0057	0.0004
NBP[1]95*	0.1516	0.0006	0.2472	0.0018	0.0151	0.0010
NBP[1]121*	0.1522	0.0006	0.2662	0.0020	0.0161	0.0010
NBP[1]147*	0.1609	0.0006	0.3096	0.0023	0.0184	0.0012
NBP[1]171*	0.2499	0.0010	0.5259	0.0039	0.0308	0.0020
NBP[1]195*	0.2603	0.0010	0.5846	0.0043	0.0338	0.0022

* Specified by user.

Material Stream: Sep gas (continued)

Fluid Package: Basis-1
Property Package: Peng-Robinson

COMPOSITION

Vapour Phase (continued)

Phase Fraction 0.9998

COMPONENTS	MOLAR FLOW (kgmole/h)	MOLE FRACTION	MASS FLOW (tonne/d)	MASS FRACTION	LIQUID VOLUME FLOW (m3/h)	LIQUID VOLUME FRACTION
NBP[1]222*	0.1437	0.0005	0.3472	0.0026	0.0198	0.0013
NBP[1]248*	0.0876	0.0003	0.2274	0.0017	0.0128	0.0008
NBP[1]273*	0.0504	0.0002	0.1401	0.0010	0.0078	0.0005
NBP[1]299*	0.0276	0.0001	0.0816	0.0006	0.0045	0.0003
NBP[1]325*	0.0135	0.0001	0.0425	0.0003	0.0023	0.0001
NBP[1]351*	0.0073	0.0000	0.0243	0.0002	0.0013	0.0001
NBP[1]377*	0.0042	0.0000	0.0151	0.0001	0.0008	0.0001
NBP[1]402*	0.0025	0.0000	0.0094	0.0001	0.0005	0.0000
NBP[1]428*	0.0015	0.0000	0.0059	0.0000	0.0003	0.0000
NBP[1]454*	0.0009	0.0000	0.0039	0.0000	0.0002	0.0000
NBP[1]480*	0.0005	0.0000	0.0025	0.0000	0.0001	0.0000
NBP[1]505*	0.0003	0.0000	0.0015	0.0000	0.0001	0.0000
NBP[1]531*	0.0002	0.0000	0.0009	0.0000	0.0000	0.0000
NBP[1]557*	0.0001	0.0000	0.0005	0.0000	0.0000	0.0000
NBP[1]582*	0.0000	0.0000	0.0003	0.0000	0.0000	0.0000
NBP[1]608*	0.0000	0.0000	0.0002	0.0000	0.0000	0.0000
NBP[1]634*	0.0000	0.0000	0.0001	0.0000	0.0000	0.0000
NBP[1]659*	0.0000	0.0000	0.0000	0.0000	0.0000	0.0000
NBP[1]685*	0.0000	0.0000	0.0000	0.0000	0.0000	0.0000
NBP[1]711*	0.0000	0.0000	0.0000	0.0000	0.0000	0.0000
NBP[1]736*	0.0000	0.0000	0.0000	0.0000	0.0000	0.0000
NBP[1]762*	0.0000	0.0000	0.0000	0.0000	0.0000	0.0000
NBP[1]788*	0.0000	0.0000	0.0000	0.0000	0.0000	0.0000
NBP[1]825*	0.0000	0.0000	0.0000	0.0000	0.0000	0.0000
NBP[1]873*	0.0000	0.0000	0.0000	0.0000	0.0000	0.0000
NBP[1]926*	0.0000	0.0000	0.0000	0.0000	0.0000	0.0000
NBP[1]978*	0.0000	0.0000	0.0000	0.0000	0.0000	0.0000
NBP[1]1021*	0.0000	0.0000	0.0000	0.0000	0.0000	0.0000
NBP[1]1075*	0.0000	0.0000	0.0000	0.0000	0.0000	0.0000
NBP[1]1123*	0.0000	0.0000	0.0000	0.0000	0.0000	0.0000
NBP[1]1173*	0.0000	0.0000	0.0000	0.0000	0.0000	0.0000
NBP[1]1250*	0.0000	0.0000	0.0000	0.0000	0.0000	0.0000
NBP[1]1339*	0.0000	0.0000	0.0000	0.0000	0.0000	0.0000
NBP[1]1432*	0.0000	0.0000	0.0000	0.0000	0.0000	0.0000
NBP[1]1528*	0.0000	0.0000	0.0000	0.0000	0.0000	0.0000
NBP[1]1637*	0.0000	0.0000	0.0000	0.0000	0.0000	0.0000
NBP[1]1732*	0.0000	0.0000	0.0000	0.0000	0.0000	0.0000
NBP[1]1819*	0.0000	0.0000	0.0000	0.0000	0.0000	0.0000
NBP[1]1913*	0.0000	0.0000	0.0000	0.0000	0.0000	0.0000
Total	261.6347	1.0000	134.5409	1.0000	15.5445	1.0000

Liquid Phase

Phase Fraction 1.644e-004

COMPONENTS	MOLAR FLOW (kgmole/h)	MOLE FRACTION	MASS FLOW (tonne/d)	MASS FRACTION	LIQUID VOLUME FLOW (m3/h)	LIQUID VOLUME FRACTION
Methane	0.0130	0.3030	0.0050	0.0081	0.0007	0.0280
Ethane	0.0025	0.0582	0.0018	0.0029	0.0002	0.0085
Propane	0.0017	0.0392	0.0018	0.0029	0.0001	0.0059
i-Butane	0.0003	0.0062	0.0004	0.0006	0.0000	0.0011
n-Butane	0.0005	0.0122	0.0007	0.0012	0.0001	0.0021
i-Pentane	0.0001	0.0029	0.0002	0.0003	0.0000	0.0006
n-Pentane	0.0001	0.0032	0.0002	0.0004	0.0000	0.0006
n-Hexane	0.0002	0.0048	0.0004	0.0007	0.0000	0.0011
Nitrogen	0.0004	0.0084	0.0002	0.0004	0.0000	0.0005
CO2	0.0012	0.0271	0.0012	0.0020	0.0001	0.0025

* Specified by user.

Material Stream: Sep gas (continued)

Fluid Package: Basis-1
Property Package: Peng-Robinson

COMPOSITION

Liquid Phase (continued)

Phase Fraction 1.644e-004

COMPONENTS	MOLAR FLOW (kgmole/h)	MOLE FRACTION	MASS FLOW (tonne/d)	MASS FRACTION	LIQUID VOLUME FLOW (m3/h)	LIQUID VOLUME FRACTION
H2S	0.0000	0.0000	0.0000	0.0000	0.0000	0.0000
H2O	0.0000	0.0009	0.0000	0.0000	0.0000	0.0000
NBP[1]95*	0.0000	0.0009	0.0001	0.0001	0.0000	0.0002
NBP[1]121*	0.0000	0.0011	0.0001	0.0001	0.0000	0.0002
NBP[1]147*	0.0001	0.0014	0.0001	0.0002	0.0000	0.0003
NBP[1]171*	0.0001	0.0024	0.0002	0.0004	0.0000	0.0005
NBP[1]195*	0.0001	0.0030	0.0003	0.0005	0.0000	0.0007
NBP[1]222*	0.0001	0.0020	0.0002	0.0003	0.0000	0.0005
NBP[1]248*	0.0001	0.0015	0.0002	0.0003	0.0000	0.0004
NBP[1]273*	0.0000	0.0011	0.0001	0.0002	0.0000	0.0003
NBP[1]299*	0.0000	0.0008	0.0001	0.0002	0.0000	0.0002
NBP[1]325*	0.0000	0.0005	0.0001	0.0001	0.0000	0.0001
NBP[1]351*	0.0000	0.0003	0.0000	0.0001	0.0000	0.0001
NBP[1]377*	0.0000	0.0003	0.0000	0.0001	0.0000	0.0001
NBP[1]402*	0.0000	0.0002	0.0000	0.0001	0.0000	0.0001
NBP[1]428*	0.0000	0.0002	0.0000	0.0000	0.0000	0.0001
NBP[1]454*	0.0000	0.0001	0.0000	0.0000	0.0000	0.0001
NBP[1]480*	0.0000	0.0001	0.0000	0.0000	0.0000	0.0000
NBP[1]505*	0.0000	0.0001	0.0000	0.0000	0.0000	0.0000
NBP[1]531*	0.0000	0.0001	0.0000	0.0000	0.0000	0.0000
NBP[1]557*	0.0000	0.0001	0.0000	0.0000	0.0000	0.0000
NBP[1]582*	0.0000	0.0000	0.0000	0.0000	0.0000	0.0000
NBP[1]608*	0.0000	0.0000	0.0000	0.0000	0.0000	0.0000
NBP[1]634*	0.0000	0.0000	0.0000	0.0000	0.0000	0.0000
NBP[1]659*	0.0000	0.0000	0.0000	0.0000	0.0000	0.0000
NBP[1]685*	0.0000	0.0000	0.0000	0.0000	0.0000	0.0000
NBP[1]711*	0.0000	0.0000	0.0000	0.0000	0.0000	0.0000
NBP[1]736*	0.0000	0.0000	0.0000	0.0000	0.0000	0.0000
NBP[1]762*	0.0000	0.0000	0.0000	0.0000	0.0000	0.0000
NBP[1]788*	0.0000	0.0000	0.0000	0.0000	0.0000	0.0000
NBP[1]825*	0.0000	0.0000	0.0000	0.0000	0.0000	0.0000
NBP[1]873*	0.0000	0.0000	0.0000	0.0000	0.0000	0.0000
NBP[1]926*	0.0000	0.0000	0.0000	0.0000	0.0000	0.0000
NBP[1]978*	0.0000	0.0000	0.0000	0.0000	0.0000	0.0000
NBP[1]1021*	0.0000	0.0000	0.0000	0.0000	0.0000	0.0000
NBP[1]1075*	0.0000	0.0000	0.0000	0.0000	0.0000	0.0000
NBP[1]1123*	0.0000	0.0000	0.0000	0.0000	0.0000	0.0000
NBP[1]1173*	0.0000	0.0000	0.0000	0.0000	0.0000	0.0000
NBP[1]1250*	0.0000	0.0000	0.0000	0.0000	0.0000	0.0000
NBP[1]1339*	0.0000	0.0000	0.0000	0.0000	0.0000	0.0000
NBP[1]1432*	0.0000	0.0000	0.0000	0.0000	0.0000	0.0000
NBP[1]1528*	0.0000	0.0000	0.0000	0.0000	0.0000	0.0000
NBP[1]1637*	0.0000	0.0000	0.0000	0.0000	0.0000	0.0000
NBP[1]1732*	0.0014	0.0315	0.0344	0.0553	0.0014	0.0545
NBP[1]1819*	0.0097	0.2262	0.2590	0.4164	0.0101	0.4054
NBP[1]1913*	0.0112	0.2598	0.3148	0.5061	0.0121	0.4853
Total	0.0430	1.0000	0.6220	1.0000	0.0249	1.0000

Phase Fraction

COMPONENTS	MOLAR FLOW	MOLE FRACTION	MASS FLOW	MASS FRACTION	LIQUID VOLUME FLOW	LIQUID VOLUME FRACTION

Licensed to: PETROCHEMICAL ENGINEERIN
* Specified by user.

Material Stream: Sep gas (continued)

Fluid Package: Basis-1
Property Package: Peng-Robinson

COMPOSITION

					Phase Fraction	
COMPONENTS	MOLAR FLOW	MOLE FRACTION	MASS FLOW	MASS FRACTION	LIQUID VOLUME FLOW	LIQUID VOLUME FRACTION
Total		1.0000		1.0000		1.0000

* Specified by user.

Material Stream: Water-PRD

Fluid Package: Basis-1
Property Package: Peng-Robinson

CONDITIONS

	Overall
Vapour / Phase Fraction	---
Temperature: (F)	---
Pressure: (psig)	450.0 *
Molar Flow (MMSCFD)	2.142
Mass Flow (tonne/d)	46.13
Std Ideal Liq Vol Flow (barrel/day)	290.7
Molar Enthalpy (kJ/kgmole)	---
Molar Entropy (kJ/kgmole-C)	---
Heat Flow (MMBtu/hr)	---
Liq Vol Flow @Std Cond (barrel/day)	285.9 *

PROPERTIES

	Overall
Molecular Weight	18.02
Molar Density (kgmole/m3)	---
Mass Density (kg/m3)	---
Act. Volume Flow (barrel/day)	---
Mass Enthalpy (kJ/kg)	---
Mass Entropy (kJ/kg-C)	---
Heat Capacity (kJ/kgmole-C)	---
Mass Heat Capacity (kJ/kg-C)	---
LHV Molar Basis (Std) (Btu/SCF)	0.0000
LHV Mass Basis (Std) (kJ/kg)	0.0000
Phase Fraction [Vol. Basis]	0.0000
Phase Fraction [Mass Basis]	0.0000
Partial Pressure of CO2 (psig)	-14.70
Cost Based on Flow (Cost/s)	0.0000
Act. Gas Flow (ACT_m3/h)	---
Avg. Liq. Density (kgmole/m3)	55.40
Specific Heat (kJ/kgmole-C)	---
Std. Gas Flow (STD_m3/h)	2523
Std. Ideal Liq. Mass Density (kg/m3)	998.0
Act. Liq. Flow (barrel/day)	---
Z Factor	---
Watson K	---
User Property	---
Partial Pressure of H2S (psig)	-14.70
Cp/(Cp - R)	---
Cp/Cv	---
Heat of Vap. (kJ/kgmole)	---
Kinematic Viscosity (cSt)	---
Liq. Mass Density (Std. Cond) (kg/m3)	1015
Liq. Vol. Flow (Std. Cond) (barrel/day)	285.9
Liquid Fraction	---
Molar Volume (m3/kgmole)	---
Mass Heat of Vap. (kJ/kg)	---
Phase Fraction [Molar Basis]	---
Surface Tension (dyne/cm)	---
Thermal Conductivity (W/m-K)	---
Viscosity (cP)	---
Cv (Semi-Ideal) (kJ/kgmole-C)	---
Mass Cv (Semi-Ideal) (kJ/kg-C)	---
Cv (kJ/kgmole-C)	---
Mass Cv (kJ/kg-C)	---
Cv (Ent. Method) (kJ/kgmole-C)	---
Mass Cv (Ent. Method) (kJ/kg-C)	---
Cp/Cv (Ent. Method)	---

* Specified by user.

Material Stream: Water-PRD (continued)

Fluid Package: Basis-1
Property Package: Peng-Robinson

PROPERTIES

		Overall				
Reid VP at 37.8 C	(psig)	---				
True VP at 37.8 C	(psig)	---				
Liq. Vol. Flow - Sum(Std. Cond)	(barrel/day)	0.0000				
HHV Molar Basis (Std)	(Btu/SCF)	46.46				
HHV Mass Basis (Std)	(kJ/kg)	2276				
CO2 Loading		---				
CO2 App ML Con	(kgmole/m3)	---				
CO2 App WT Con	(kgmol/kg)	0.0000				
Phase Fraction [Act. Vol. Basis]		0.0000				
Mass Exergy	(kJ/kg)	9.753e+006				
Viscosity Index		---				
Ideal Gas Cp/Cv		1.000				
Ideal Gas Cp	(kJ/kgmole-C)	1.170e+007				
Mass Ideal Gas Cp	(kJ/kg-C)	6.496e+005				
Bubble Point Pressure	(psig)	---				

COMPOSITION

Overall Phase

Vapour Fraction ---

COMPONENTS	MOLAR FLOW (kgmole/h)	MOLE FRACTION	MASS FLOW (tonne/d)	MASS FRACTION	LIQUID VOLUME FLOW (m3/h)	LIQUID VOLUME FRACTION
Methane	0.0000 *	0.0000 *	0.0000 *	0.0000 *	0.0000 *	0.0000 *
Ethane	0.0000 *	0.0000 *	0.0000 *	0.0000 *	0.0000 *	0.0000 *
Propane	0.0000 *	0.0000 *	0.0000 *	0.0000 *	0.0000 *	0.0000 *
i-Butane	0.0000 *	0.0000 *	0.0000 *	0.0000 *	0.0000 *	0.0000 *
n-Butane	0.0000 *	0.0000 *	0.0000 *	0.0000 *	0.0000 *	0.0000 *
i-Pentane	0.0000 *	0.0000 *	0.0000 *	0.0000 *	0.0000 *	0.0000 *
n-Pentane	0.0000 *	0.0000 *	0.0000 *	0.0000 *	0.0000 *	0.0000 *
n-Hexane	0.0000 *	0.0000 *	0.0000 *	0.0000 *	0.0000 *	0.0000 *
Nitrogen	0.0000 *	0.0000 *	0.0000 *	0.0000 *	0.0000 *	0.0000 *
CO2	0.0000 *	0.0000 *	0.0000 *	0.0000 *	0.0000 *	0.0000 *
H2S	0.0000 *	0.0000 *	0.0000 *	0.0000 *	0.0000 *	0.0000 *
H2O	106.6873 *	1.0000 *	46.1276 *	1.0000 *	1.9259 *	1.0000 *
NBP[1]95*	0.0000 *	0.0000 *	0.0000 *	0.0000 *	0.0000 *	0.0000 *
NBP[1]121*	0.0000 *	0.0000 *	0.0000 *	0.0000 *	0.0000 *	0.0000 *
NBP[1]147*	0.0000 *	0.0000 *	0.0000 *	0.0000 *	0.0000 *	0.0000 *
NBP[1]171*	0.0000 *	0.0000 *	0.0000 *	0.0000 *	0.0000 *	0.0000 *
NBP[1]195*	0.0000 *	0.0000 *	0.0000 *	0.0000 *	0.0000 *	0.0000 *
NBP[1]222*	0.0000 *	0.0000 *	0.0000 *	0.0000 *	0.0000 *	0.0000 *
NBP[1]248*	0.0000 *	0.0000 *	0.0000 *	0.0000 *	0.0000 *	0.0000 *
NBP[1]273*	0.0000 *	0.0000 *	0.0000 *	0.0000 *	0.0000 *	0.0000 *
NBP[1]299*	0.0000 *	0.0000 *	0.0000 *	0.0000 *	0.0000 *	0.0000 *
NBP[1]325*	0.0000 *	0.0000 *	0.0000 *	0.0000 *	0.0000 *	0.0000 *
NBP[1]351*	0.0000 *	0.0000 *	0.0000 *	0.0000 *	0.0000 *	0.0000 *
NBP[1]377*	0.0000 *	0.0000 *	0.0000 *	0.0000 *	0.0000 *	0.0000 *
NBP[1]402*	0.0000 *	0.0000 *	0.0000 *	0.0000 *	0.0000 *	0.0000 *
NBP[1]428*	0.0000 *	0.0000 *	0.0000 *	0.0000 *	0.0000 *	0.0000 *
NBP[1]454*	0.0000 *	0.0000 *	0.0000 *	0.0000 *	0.0000 *	0.0000 *
NBP[1]480*	0.0000 *	0.0000 *	0.0000 *	0.0000 *	0.0000 *	0.0000 *
NBP[1]505*	0.0000 *	0.0000 *	0.0000 *	0.0000 *	0.0000 *	0.0000 *
NBP[1]531*	0.0000 *	0.0000 *	0.0000 *	0.0000 *	0.0000 *	0.0000 *
NBP[1]557*	0.0000 *	0.0000 *	0.0000 *	0.0000 *	0.0000 *	0.0000 *
NBP[1]582*	0.0000 *	0.0000 *	0.0000 *	0.0000 *	0.0000 *	0.0000 *
NBP[1]608*	0.0000 *	0.0000 *	0.0000 *	0.0000 *	0.0000 *	0.0000 *
NBP[1]634*	0.0000 *	0.0000 *	0.0000 *	0.0000 *	0.0000 *	0.0000 *
NBP[1]659*	0.0000 *	0.0000 *	0.0000 *	0.0000 *	0.0000 *	0.0000 *
NBP[1]685*	0.0000 *	0.0000 *	0.0000 *	0.0000 *	0.0000 *	0.0000 *

Licensed to: PETROCHEMICAL ENGINEERIN
* Specified by user.

Material Stream: Water-PRD (continued)

Fluid Package: Basis-1
Property Package: Peng-Robinson

COMPOSITION

Overall Phase (continued)

Vapour Fraction ---

COMPONENTS	MOLAR FLOW (kgmole/h)	MOLE FRACTION	MASS FLOW (tonne/d)	MASS FRACTION	LIQUID VOLUME FLOW (m3/h)	LIQUID VOLUME FRACTION
NBP[1]711*	0.0000 *	0.0000 *	0.0000 *	0.0000 *	0.0000 *	0.0000 *
NBP[1]736*	0.0000 *	0.0000 *	0.0000 *	0.0000 *	0.0000 *	0.0000 *
NBP[1]762*	0.0000 *	0.0000 *	0.0000 *	0.0000 *	0.0000 *	0.0000 *
NBP[1]788*	0.0000 *	0.0000 *	0.0000 *	0.0000 *	0.0000 *	0.0000 *
NBP[1]825*	0.0000 *	0.0000 *	0.0000 *	0.0000 *	0.0000 *	0.0000 *
NBP[1]873*	0.0000 *	0.0000 *	0.0000 *	0.0000 *	0.0000 *	0.0000 *
NBP[1]926*	0.0000 *	0.0000 *	0.0000 *	0.0000 *	0.0000 *	0.0000 *
NBP[1]978*	0.0000 *	0.0000 *	0.0000 *	0.0000 *	0.0000 *	0.0000 *
NBP[1]1021*	0.0000 *	0.0000 *	0.0000 *	0.0000 *	0.0000 *	0.0000 *
NBP[1]1075*	0.0000 *	0.0000 *	0.0000 *	0.0000 *	0.0000 *	0.0000 *
NBP[1]1123*	0.0000 *	0.0000 *	0.0000 *	0.0000 *	0.0000 *	0.0000 *
NBP[1]1173*	0.0000 *	0.0000 *	0.0000 *	0.0000 *	0.0000 *	0.0000 *
NBP[1]1250*	0.0000 *	0.0000 *	0.0000 *	0.0000 *	0.0000 *	0.0000 *
NBP[1]1339*	0.0000 *	0.0000 *	0.0000 *	0.0000 *	0.0000 *	0.0000 *
NBP[1]1432*	0.0000 *	0.0000 *	0.0000 *	0.0000 *	0.0000 *	0.0000 *
NBP[1]1528*	0.0000 *	0.0000 *	0.0000 *	0.0000 *	0.0000 *	0.0000 *
NBP[1]1637*	0.0000 *	0.0000 *	0.0000 *	0.0000 *	0.0000 *	0.0000 *
NBP[1]1732*	0.0000 *	0.0000 *	0.0000 *	0.0000 *	0.0000 *	0.0000 *
NBP[1]1819*	0.0000 *	0.0000 *	0.0000 *	0.0000 *	0.0000 *	0.0000 *
NBP[1]1913*	0.0000 *	0.0000 *	0.0000 *	0.0000 *	0.0000 *	0.0000 *
Total	106.6873	1.0000	46.1276	1.0000	1.9259	1.0000

* Specified by user.

ANNEXURE-B

MP Separation @ 650 psig without line heater

CASE-1B

Pandhi		
Temperature	85.00	F
Pressure	450.0	psig
Molar Flow	7.874	MMSCFD
Phase - Molar Flow (Vapour Phase)	5.380	MMSCFD
Phase - Liq Vol Flow (Liquid Phase)	450.0	barrel/day
Phase - Liq Vol Flow (Aqueous Phase)	290.0	barrel/day

SPRDSHT-1		
FEED GAS LPG CONTENT	24.50	tonne/d

SPRDSHT-2		
SEPARATOR GAS LPG CONTENT	20.23	tonne/d

Sep gas		
Temperature	96.39	F
Pressure	640.0	psig
Molar Flow	5.351	MMSCFD

permeate		
Temperature	100.0	F
Pressure	20.00	psig
Molar Flow	2.810	MMSCFD
HHV Molar Basis (Std)	800.0	Btu/SCF

SPRDSHT-6		
FLASH GAS LPG CONTENT	2.821	tonne/d

SPRDSHT-3		
COMBINED GAS HHV	854.4	Btu/SCF

11		
Temperature	76.03	F
Pressure	20.00	psig
Molar Flow	0.1397	MMSCFD

8		
Temperature	96.33	F
Pressure	650.0	psig
Molar Flow	7.874	MMSCFD

Pandhi-Cond.		
Actual Liquid Flow	456.3	barrel/day

13		
Actual Liquid Flow	383.2	barrel/day

SPRDSHT-5		
SEPARATOR CONDENSATE LPG CONTENT	4.268	tonne/d

SPRDSHT-4		
STABILIZED CONDENSATE LPG CONTENT	1.863	tonne/d

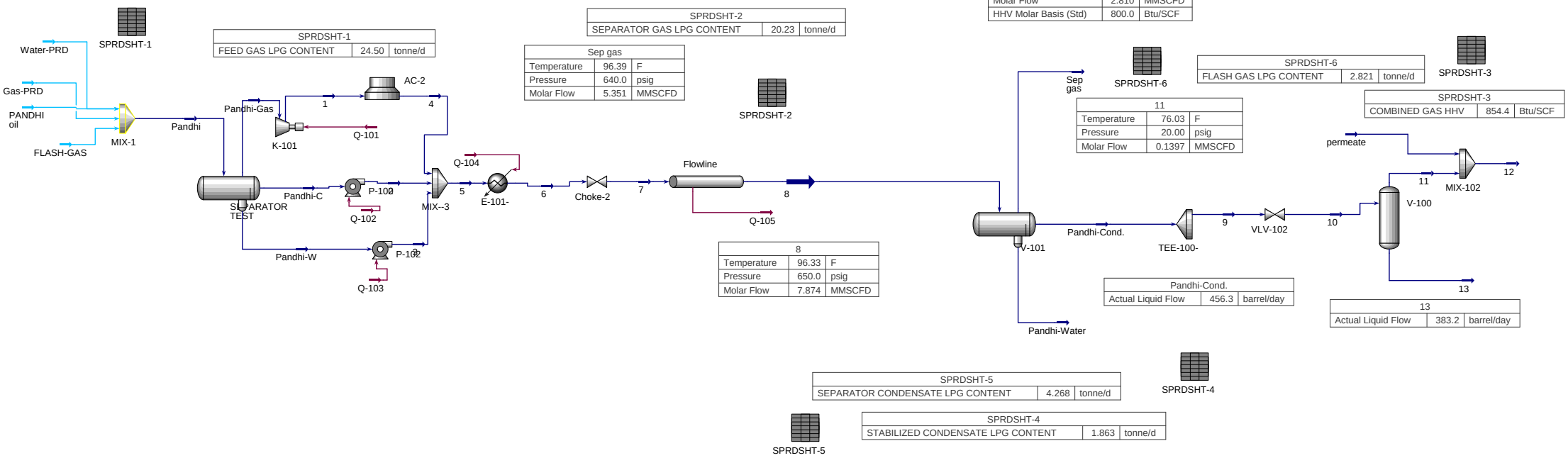

Petrochemical Engineering Consultants Karachi, Pakistan	Case Name:	CASE-1B.hsc
	Unit Set:	NewUser5e
	Date/Time:	Fri Mar 20 18:19:28 2020

Material Stream: 1

Fluid Package: Basis-1

Property Package: Peng-Robinson

CONDITIONS

	Overall	Vapour Phase	Liquid Phase		
Vapour / Phase Fraction	0.9999	0.9999	0.0001		
Temperature: (F)	329.4	329.4	329.4		
Pressure: (psig)	2095 *	2095	2095		
Molar Flow (MMSCFD)	5.381	5.381	5.219e-004		
Mass Flow (tonne/d)	137.6	137.2	0.3246		
Std Ideal Liq Vol Flow (barrel/day)	2403	2401	1.974		
Molar Enthalpy (kJ/kgmole)	-8.389e+004	-8.380e+004	-9.628e+005		
Molar Entropy (kJ/kgmole-C)	162.4	162.3	1655		
Heat Flow (MMBtu/hr)	-21.31	-21.29	-2.372e-002		
Liq Vol Flow @Std Cond (barrel/day)	9.528e+005 *	9.528e+005	2.076		

PROPERTIES

	Overall	Vapour Phase	Liquid Phase		
Molecular Weight	21.39	21.34	520.4		
Molar Density (kgmole/m3)	4.261	4.262	1.702		
Mass Density (kg/m3)	91.12	90.93	885.8		
Act. Volume Flow (barrel/day)	9495	9493	2.305		
Mass Enthalpy (kJ/kg)	-3923	-3928	-1850		
Mass Entropy (kJ/kg-C)	7.595	7.606	3.180		
Heat Capacity (kJ/kgmole-C)	59.17	59.05	1275		
Mass Heat Capacity (kJ/kg-C)	2.767	2.768	2.450		
LHV Molar Basis (Std) (Btu/SCF)	---	---	---		
LHV Mass Basis (Std) (kJ/kg)	---	---	---		
Phase Fraction [Vol. Basis]	0.9992	0.9992	8.215e-004		
Phase Fraction [Mass Basis]	0.9976	0.9976	2.360e-003		
Partial Pressure of CO2 (psig)	57.20	---	---		
Cost Based on Flow (Cost/s)	0.0000	0.0000	0.0000		
Act. Gas Flow (ACT_m3/h)	62.89	62.89	---		
Avg. Liq. Density (kgmole/m3)	16.84	16.85	1.988		
Specific Heat (kJ/kgmole-C)	59.17	59.05	1275		
Std. Gas Flow (STD_m3/h)	6337	6337	0.6146		
Std. Ideal Liq. Mass Density (kg/m3)	360.1	359.5	1034		
Act. Liq. Flow (barrel/day)	2.305	---	2.305		
Z Factor	---	0.9365	2.344		
Watson K	17.28	17.29	11.39		
User Property	---	---	---		
Partial Pressure of H2S (psig)	-14.69	---	---		
Cp/(Cp - R)	1.163	1.164	1.007		
Cp/Cv	1.348	1.349	1.099		
Heat of Vap. (kJ/kgmole)	1.606e+004	---	---		
Kinematic Viscosity (cSt)	---	0.2123	19.72		
Liq. Mass Density (Std. Cond) (kg/m3)	0.9081	0.9060	983.5		
Liq. Vol. Flow (Std. Cond) (barrel/day)	9.528e+005	9.528e+005	2.076		
Liquid Fraction	9.698e-005	0.0000	1.000		
Molar Volume (m3/kgmole)	0.2347	0.2347	0.5875		
Mass Heat of Vap. (kJ/kg)	751.0	---	---		
Phase Fraction [Molar Basis]	0.9999	0.9999	0.0001		
Surface Tension (dyne/cm)	8.567	---	8.567		
Thermal Conductivity (W/m-K)	---	5.953e-002	8.973e-002		
Viscosity (cP)	---	1.930e-002	17.47		
Cv (Semi-Ideal) (kJ/kgmole-C)	50.86	50.74	1266		
Mass Cv (Semi-Ideal) (kJ/kg-C)	2.378	2.378	2.434		
Cv (kJ/kgmole-C)	43.89	43.77	1160		
Mass Cv (kJ/kg-C)	2.052	2.051	2.230		
Cv (Ent. Method) (kJ/kgmole-C)	---	43.77	1194		
Mass Cv (Ent. Method) (kJ/kg-C)	---	2.051	2.294		
Cp/Cv (Ent. Method)	---	1.349	1.068		

Licensed to: PETROCHEMICAL ENGINEERIN

* Specified by user.

Material Stream: 1 (continued)

Fluid Package: Basis-1
Property Package: Peng-Robinson

PROPERTIES

	Overall	Vapour Phase	Liquid Phase		
Reid VP at 37.8 C (psig)	---	---	85.65		
True VP at 37.8 C (psig)	3607	---	1991		
Liq. Vol. Flow - Sum(Std. Cond) (barrel/day)	9.528e+005	9.528e+005	2.076		
HHV Molar Basis (Std) (Btu/SCF)	---	---	---		
HHV Mass Basis (Std) (kJ/kg)	---	---	---		
CO2 Loading	---	---	---		
CO2 App ML Con (kgmole/m3)	---	---	4.386e-002		
CO2 App WT Con (kgmol/kg)	---	---	4.951e-005		
Phase Fraction [Act. Vol. Basis]	0.9998	0.9998	2.428e-004		
Mass Exergy (kJ/kg)	595.2	---	---		
Viscosity Index	---	---	---		
Ideal Gas Cp/Cv	1.195	1.196	1.007		
Ideal Gas Cp (kJ/kgmole-C)	50.90	50.80	1127		
Mass Ideal Gas Cp (kJ/kg-C)	2.380	2.381	2.166		
Bubble Point Pressure (psig)	4369	---	---		

COMPOSITION

Overall Phase

Vapour Fraction 0.9999

COMPONENTS	MOLAR FLOW (kgmole/h)	MOLE FRACTION	MASS FLOW (tonne/d)	MASS FRACTION	LIQUID VOLUME FLOW (m3/h)	LIQUID VOLUME FRACTION
Methane	205.0219	0.7649	78.9395	0.5738	10.9860	0.6901
Ethane	27.6541	0.1032	19.9573	0.1451	2.3379	0.1469
Propane	13.5902	0.0507	14.3829	0.1046	1.1828	0.0743
i-Butane	1.5866	0.0059	2.2133	0.0161	0.1641	0.0103
n-Butane	2.8841	0.0108	4.0233	0.0292	0.2874	0.0181
i-Pentane	0.4635	0.0017	0.8025	0.0058	0.0536	0.0034
n-Pentane	0.4652	0.0017	0.8056	0.0059	0.0533	0.0033
n-Hexane	0.3694	0.0014	0.7639	0.0056	0.0480	0.0030
Nitrogen	5.5752	0.0208	3.7483	0.0272	0.1937	0.0122
CO2	9.1335	0.0341	9.6471	0.0701	0.4870	0.0306
H2S	0.0005	0.0000	0.0004	0.0000	0.0000	0.0000
H2O	0.3945	0.0015	0.1706	0.0012	0.0071	0.0004
NBP[1]95*	0.1425	0.0005	0.2323	0.0017	0.0142	0.0009
NBP[1]121*	0.1318	0.0005	0.2305	0.0017	0.0139	0.0009
NBP[1]147*	0.1254	0.0005	0.2414	0.0018	0.0144	0.0009
NBP[1]171*	0.1733	0.0006	0.3646	0.0027	0.0213	0.0013
NBP[1]195*	0.1579	0.0006	0.3546	0.0026	0.0205	0.0013
NBP[1]222*	0.0732	0.0003	0.1768	0.0013	0.0101	0.0006
NBP[1]248*	0.0375	0.0001	0.0974	0.0007	0.0055	0.0003
NBP[1]273*	0.0181	0.0001	0.0503	0.0004	0.0028	0.0002
NBP[1]299*	0.0083	0.0000	0.0245	0.0002	0.0014	0.0001
NBP[1]325*	0.0033	0.0000	0.0105	0.0001	0.0006	0.0000
NBP[1]351*	0.0015	0.0000	0.0050	0.0000	0.0003	0.0000
NBP[1]377*	0.0007	0.0000	0.0025	0.0000	0.0001	0.0000
NBP[1]402*	0.0003	0.0000	0.0013	0.0000	0.0001	0.0000
NBP[1]428*	0.0002	0.0000	0.0007	0.0000	0.0000	0.0000
NBP[1]454*	0.0001	0.0000	0.0003	0.0000	0.0000	0.0000
NBP[1]480*	0.0000	0.0000	0.0002	0.0000	0.0000	0.0000
NBP[1]505*	0.0000	0.0000	0.0001	0.0000	0.0000	0.0000
NBP[1]531*	0.0000	0.0000	0.0000	0.0000	0.0000	0.0000
NBP[1]557*	0.0000	0.0000	0.0000	0.0000	0.0000	0.0000
NBP[1]582*	0.0000	0.0000	0.0000	0.0000	0.0000	0.0000
NBP[1]608*	0.0000	0.0000	0.0000	0.0000	0.0000	0.0000
NBP[1]634*	0.0000	0.0000	0.0000	0.0000	0.0000	0.0000
NBP[1]659*	0.0000	0.0000	0.0000	0.0000	0.0000	0.0000
NBP[1]685*	0.0000	0.0000	0.0000	0.0000	0.0000	0.0000

* Specified by user.

Material Stream: 1 (continued)

Fluid Package: Basis-1
Property Package: Peng-Robinson

COMPOSITION

Overall Phase (continued)

Vapour Fraction 0.9999

COMPONENTS	MOLAR FLOW (kgmole/h)	MOLE FRACTION	MASS FLOW (tonne/d)	MASS FRACTION	LIQUID VOLUME FLOW (m3/h)	LIQUID VOLUME FRACTION
NBP[1]711*	0.0000	0.0000	0.0000	0.0000	0.0000	0.0000
NBP[1]736*	0.0000	0.0000	0.0000	0.0000	0.0000	0.0000
NBP[1]762*	0.0000	0.0000	0.0000	0.0000	0.0000	0.0000
NBP[1]788*	0.0000	0.0000	0.0000	0.0000	0.0000	0.0000
NBP[1]825*	0.0000	0.0000	0.0000	0.0000	0.0000	0.0000
NBP[1]873*	0.0000	0.0000	0.0000	0.0000	0.0000	0.0000
NBP[1]926*	0.0000	0.0000	0.0000	0.0000	0.0000	0.0000
NBP[1]978*	0.0000	0.0000	0.0000	0.0000	0.0000	0.0000
NBP[1]1021*	0.0000	0.0000	0.0000	0.0000	0.0000	0.0000
NBP[1]1075*	0.0000	0.0000	0.0000	0.0000	0.0000	0.0000
NBP[1]1123*	0.0000	0.0000	0.0000	0.0000	0.0000	0.0000
NBP[1]1173*	0.0000	0.0000	0.0000	0.0000	0.0000	0.0000
NBP[1]1250*	0.0000	0.0000	0.0000	0.0000	0.0000	0.0000
NBP[1]1339*	0.0000	0.0000	0.0000	0.0000	0.0000	0.0000
NBP[1]1432*	0.0000	0.0000	0.0000	0.0000	0.0000	0.0000
NBP[1]1528*	0.0000	0.0000	0.0000	0.0000	0.0000	0.0000
NBP[1]1637*	0.0000	0.0000	0.0000	0.0000	0.0000	0.0000
NBP[1]1732*	0.0000	0.0000	0.0000	0.0000	0.0000	0.0000
NBP[1]1819*	0.0001	0.0000	0.0029	0.0000	0.0001	0.0000
NBP[1]1913*	0.0112	0.0000	0.3148	0.0023	0.0121	0.0008
Total	268.0242	1.0000	137.5655	1.0000	15.9186	1.0000

Vapour Phase

Phase Fraction 0.9999

COMPONENTS	MOLAR FLOW (kgmole/h)	MOLE FRACTION	MASS FLOW (tonne/d)	MASS FRACTION	LIQUID VOLUME FLOW (m3/h)	LIQUID VOLUME FRACTION
Methane	205.0115	0.7650	78.9355	0.5752	10.9855	0.6907
Ethane	27.6524	0.1032	19.9561	0.1454	2.3378	0.1470
Propane	13.5892	0.0507	14.3819	0.1048	1.1827	0.0744
i-Butane	1.5865	0.0059	2.2131	0.0161	0.1641	0.0103
n-Butane	2.8838	0.0108	4.0229	0.0293	0.2874	0.0181
i-Pentane	0.4634	0.0017	0.8025	0.0058	0.0536	0.0034
n-Pentane	0.4652	0.0017	0.8055	0.0059	0.0533	0.0034
n-Hexane	0.3693	0.0014	0.7638	0.0056	0.0480	0.0030
Nitrogen	5.5749	0.0208	3.7481	0.0273	0.1937	0.0122
CO2	9.1329	0.0341	9.6464	0.0703	0.4870	0.0306
H2S	0.0005	0.0000	0.0004	0.0000	0.0000	0.0000
H2O	0.3944	0.0015	0.1705	0.0012	0.0071	0.0004
NBP[1]95*	0.1425	0.0005	0.2323	0.0017	0.0142	0.0009
NBP[1]121*	0.1318	0.0005	0.2305	0.0017	0.0139	0.0009
NBP[1]147*	0.1254	0.0005	0.2413	0.0018	0.0144	0.0009
NBP[1]171*	0.1732	0.0006	0.3645	0.0027	0.0213	0.0013
NBP[1]195*	0.1579	0.0006	0.3545	0.0026	0.0205	0.0013
NBP[1]222*	0.0732	0.0003	0.1768	0.0013	0.0101	0.0006
NBP[1]248*	0.0375	0.0001	0.0974	0.0007	0.0055	0.0003
NBP[1]273*	0.0181	0.0001	0.0503	0.0004	0.0028	0.0002
NBP[1]299*	0.0083	0.0000	0.0245	0.0002	0.0014	0.0001
NBP[1]325*	0.0033	0.0000	0.0105	0.0001	0.0006	0.0000
NBP[1]351*	0.0015	0.0000	0.0050	0.0000	0.0003	0.0000
NBP[1]377*	0.0007	0.0000	0.0025	0.0000	0.0001	0.0000
NBP[1]402*	0.0003	0.0000	0.0013	0.0000	0.0001	0.0000
NBP[1]428*	0.0002	0.0000	0.0007	0.0000	0.0000	0.0000
NBP[1]454*	0.0001	0.0000	0.0003	0.0000	0.0000	0.0000
NBP[1]480*	0.0000	0.0000	0.0002	0.0000	0.0000	0.0000
NBP[1]505*	0.0000	0.0000	0.0001	0.0000	0.0000	0.0000

* Specified by user.

Material Stream: 1 (continued)

Fluid Package: Basis-1
Property Package: Peng-Robinson

COMPOSITION

Vapour Phase (continued)

Phase Fraction 0.9999

COMPONENTS	MOLAR FLOW (kgmole/h)	MOLE FRACTION	MASS FLOW (tonne/d)	MASS FRACTION	LIQUID VOLUME FLOW (m3/h)	LIQUID VOLUME FRACTION
NBP[1]531*	0.0000	0.0000	0.0000	0.0000	0.0000	0.0000
NBP[1]557*	0.0000	0.0000	0.0000	0.0000	0.0000	0.0000
NBP[1]582*	0.0000	0.0000	0.0000	0.0000	0.0000	0.0000
NBP[1]608*	0.0000	0.0000	0.0000	0.0000	0.0000	0.0000
NBP[1]634*	0.0000	0.0000	0.0000	0.0000	0.0000	0.0000
NBP[1]659*	0.0000	0.0000	0.0000	0.0000	0.0000	0.0000
NBP[1]685*	0.0000	0.0000	0.0000	0.0000	0.0000	0.0000
NBP[1]711*	0.0000	0.0000	0.0000	0.0000	0.0000	0.0000
NBP[1]736*	0.0000	0.0000	0.0000	0.0000	0.0000	0.0000
NBP[1]762*	0.0000	0.0000	0.0000	0.0000	0.0000	0.0000
NBP[1]788*	0.0000	0.0000	0.0000	0.0000	0.0000	0.0000
NBP[1]825*	0.0000	0.0000	0.0000	0.0000	0.0000	0.0000
NBP[1]873*	0.0000	0.0000	0.0000	0.0000	0.0000	0.0000
NBP[1]926*	0.0000	0.0000	0.0000	0.0000	0.0000	0.0000
NBP[1]978*	0.0000	0.0000	0.0000	0.0000	0.0000	0.0000
NBP[1]1021*	0.0000	0.0000	0.0000	0.0000	0.0000	0.0000
NBP[1]1075*	0.0000	0.0000	0.0000	0.0000	0.0000	0.0000
NBP[1]1123*	0.0000	0.0000	0.0000	0.0000	0.0000	0.0000
NBP[1]1173*	0.0000	0.0000	0.0000	0.0000	0.0000	0.0000
NBP[1]1250*	0.0000	0.0000	0.0000	0.0000	0.0000	0.0000
NBP[1]1339*	0.0000	0.0000	0.0000	0.0000	0.0000	0.0000
NBP[1]1432*	0.0000	0.0000	0.0000	0.0000	0.0000	0.0000
NBP[1]1528*	0.0000	0.0000	0.0000	0.0000	0.0000	0.0000
NBP[1]1637*	0.0000	0.0000	0.0000	0.0000	0.0000	0.0000
NBP[1]1732*	0.0000	0.0000	0.0000	0.0000	0.0000	0.0000
NBP[1]1819*	0.0000	0.0000	0.0000	0.0000	0.0000	0.0000
NBP[1]1913*	0.0000	0.0000	0.0000	0.0000	0.0000	0.0000
Total	267.9982	1.0000	137.2395	1.0000	15.9054	1.0000

Liquid Phase

Phase Fraction 9.698e-005

COMPONENTS	MOLAR FLOW (kgmole/h)	MOLE FRACTION	MASS FLOW (tonne/d)	MASS FRACTION	LIQUID VOLUME FLOW (m3/h)	LIQUID VOLUME FRACTION
Methane	0.0104	0.3997	0.0040	0.0123	0.0006	0.0426
Ethane	0.0017	0.0659	0.0012	0.0038	0.0001	0.0111
Propane	0.0010	0.0387	0.0011	0.0033	0.0001	0.0067
i-Butane	0.0001	0.0053	0.0002	0.0006	0.0000	0.0011
n-Butane	0.0003	0.0100	0.0004	0.0011	0.0000	0.0020
i-Pentane	0.0000	0.0019	0.0001	0.0003	0.0000	0.0004
n-Pentane	0.0001	0.0020	0.0001	0.0003	0.0000	0.0004
n-Hexane	0.0000	0.0019	0.0001	0.0003	0.0000	0.0005
Nitrogen	0.0003	0.0108	0.0002	0.0006	0.0000	0.0007
CO2	0.0007	0.0258	0.0007	0.0022	0.0000	0.0027
H2S	0.0000	0.0000	0.0000	0.0000	0.0000	0.0000
H2O	0.0000	0.0011	0.0000	0.0000	0.0000	0.0000
NBP[1]95*	0.0000	0.0006	0.0000	0.0001	0.0000	0.0001
NBP[1]121*	0.0000	0.0006	0.0000	0.0001	0.0000	0.0001
NBP[1]147*	0.0000	0.0006	0.0000	0.0001	0.0000	0.0001
NBP[1]171*	0.0000	0.0009	0.0001	0.0002	0.0000	0.0002
NBP[1]195*	0.0000	0.0009	0.0001	0.0002	0.0000	0.0002
NBP[1]222*	0.0000	0.0005	0.0000	0.0001	0.0000	0.0001
NBP[1]248*	0.0000	0.0003	0.0000	0.0001	0.0000	0.0001
NBP[1]273*	0.0000	0.0001	0.0000	0.0000	0.0000	0.0000
NBP[1]299*	0.0000	0.0001	0.0000	0.0000	0.0000	0.0000
NBP[1]325*	0.0000	0.0000	0.0000	0.0000	0.0000	0.0000

* Specified by user.

Material Stream: 1 (continued)

Fluid Package: Basis-1
Property Package: Peng-Robinson

COMPOSITION

Liquid Phase (continued)

Phase Fraction 9.698e-005

COMPONENTS	MOLAR FLOW (kgmole/h)	MOLE FRACTION	MASS FLOW (tonne/d)	MASS FRACTION	LIQUID VOLUME FLOW (m3/h)	LIQUID VOLUME FRACTION
NBP[1]351*	0.0000	0.0000	0.0000	0.0000	0.0000	0.0000
NBP[1]377*	0.0000	0.0000	0.0000	0.0000	0.0000	0.0000
NBP[1]402*	0.0000	0.0000	0.0000	0.0000	0.0000	0.0000
NBP[1]428*	0.0000	0.0000	0.0000	0.0000	0.0000	0.0000
NBP[1]454*	0.0000	0.0000	0.0000	0.0000	0.0000	0.0000
NBP[1]480*	0.0000	0.0000	0.0000	0.0000	0.0000	0.0000
NBP[1]505*	0.0000	0.0000	0.0000	0.0000	0.0000	0.0000
NBP[1]531*	0.0000	0.0000	0.0000	0.0000	0.0000	0.0000
NBP[1]557*	0.0000	0.0000	0.0000	0.0000	0.0000	0.0000
NBP[1]582*	0.0000	0.0000	0.0000	0.0000	0.0000	0.0000
NBP[1]608*	0.0000	0.0000	0.0000	0.0000	0.0000	0.0000
NBP[1]634*	0.0000	0.0000	0.0000	0.0000	0.0000	0.0000
NBP[1]659*	0.0000	0.0000	0.0000	0.0000	0.0000	0.0000
NBP[1]685*	0.0000	0.0000	0.0000	0.0000	0.0000	0.0000
NBP[1]711*	0.0000	0.0000	0.0000	0.0000	0.0000	0.0000
NBP[1]736*	0.0000	0.0000	0.0000	0.0000	0.0000	0.0000
NBP[1]762*	0.0000	0.0000	0.0000	0.0000	0.0000	0.0000
NBP[1]788*	0.0000	0.0000	0.0000	0.0000	0.0000	0.0000
NBP[1]825*	0.0000	0.0000	0.0000	0.0000	0.0000	0.0000
NBP[1]873*	0.0000	0.0000	0.0000	0.0000	0.0000	0.0000
NBP[1]926*	0.0000	0.0000	0.0000	0.0000	0.0000	0.0000
NBP[1]978*	0.0000	0.0000	0.0000	0.0000	0.0000	0.0000
NBP[1]1021*	0.0000	0.0000	0.0000	0.0000	0.0000	0.0000
NBP[1]1075*	0.0000	0.0000	0.0000	0.0000	0.0000	0.0000
NBP[1]1123*	0.0000	0.0000	0.0000	0.0000	0.0000	0.0000
NBP[1]1173*	0.0000	0.0000	0.0000	0.0000	0.0000	0.0000
NBP[1]1250*	0.0000	0.0000	0.0000	0.0000	0.0000	0.0000
NBP[1]1339*	0.0000	0.0000	0.0000	0.0000	0.0000	0.0000
NBP[1]1432*	0.0000	0.0000	0.0000	0.0000	0.0000	0.0000
NBP[1]1528*	0.0000	0.0000	0.0000	0.0000	0.0000	0.0000
NBP[1]1637*	0.0000	0.0000	0.0000	0.0000	0.0000	0.0000
NBP[1]1732*	0.0000	0.0000	0.0000	0.0000	0.0000	0.0000
NBP[1]1819*	0.0001	0.0041	0.0029	0.0088	0.0001	0.0085
NBP[1]1913*	0.0111	0.4282	0.3135	0.9656	0.0121	0.9220
Total	0.0260	1.0000	0.3246	1.0000	0.0131	1.0000

Material Stream: 2

Fluid Package: Basis-1
Property Package: Peng-Robinson

CONDITIONS

		Overall	Liquid Phase	Liquid Phase		
Vapour / Phase Fraction		0.0000	0.0170	0.9830		
Temperature:	(F)	95.88	95.88	95.88		
Pressure:	(psig)	2090 *	2090	2090		
Molar Flow	(MMSCFD)	0.3574	6.079e-003	0.3513		
Mass Flow	(tonne/d)	53.98	3.654	50.33		
Std Ideal Liq Vol Flow	(barrel/day)	449.3	23.56	425.8		
Molar Enthalpy	(kJ/kgmole)	-2.850e+005	-1.060e+006	-2.716e+005		
Molar Entropy	(kJ/kgmole-C)	220.4	1098	205.3		
Heat Flow	(MMBtu/hr)	-4.808	-0.3044	-4.504		
Liq Vol Flow @Std Cond	(barrel/day)	434.3 *	23.73	410.6		

* Specified by user.

Material Stream: 2 (continued)

Fluid Package: Basis-1
Property Package: Peng-Robinson

PROPERTIES

		Overall	Liquid Phase	Liquid Phase		
Molecular Weight		126.4	502.8	119.8		
Molar Density	(kgmole/m3)	6.147	1.922	6.390		
Mass Density	(kg/m3)	776.7	966.5	765.7		
Act. Volume Flow	(barrel/day)	437.2	23.78	413.4		
Mass Enthalpy	(kJ/kg)	-2255	-2109	-2266		
Mass Entropy	(kJ/kg-C)	1.745	2.183	1.713		
Heat Capacity	(kJ/kgmole-C)	255.7	961.1	243.5		
Mass Heat Capacity	(kJ/kg-C)	2.024	1.911	2.032		
LHV Molar Basis (Std)	(Btu/SCF)	---	---	---		
LHV Mass Basis (Std)	(kJ/kg)	---	---	---		
Phase Fraction [Vol. Basis]		0.0000	5.243e-002	0.9476		
Phase Fraction [Mass Basis]		0.0000	6.769e-002	0.9323		
Partial Pressure of CO2	(psig)	-14.70	---	---		
Cost Based on Flow	(Cost/s)	0.0000	0.0000	0.0000		
Act. Gas Flow	(ACT_m3/h)	---	---	---		
Avg. Liq. Density	(kgmole/m3)	5.980	1.940	6.204		
Specific Heat	(kJ/kgmole-C)	255.7	961.1	243.5		
Std. Gas Flow	(STD_m3/h)	420.9	7.159	413.7		
Std. Ideal Liq. Mass Density	(kg/m3)	755.6	975.6	743.5		
Act. Liq. Flow	(barrel/day)	437.2	23.78	413.4		
Z Factor		---	2.942	0.8850		
Watson K		11.99	11.67	12.06		
User Property		---	---	---		
Partial Pressure of H2S	(psig)	-14.70	---	---		
Cp/(Cp - R)		1.034	1.009	1.035		
Cp/Cv		1.202	1.103	1.210		
Heat of Vap.	(kJ/kgmole)	---	---	---		
Kinematic Viscosity	(cSt)	1.244	537.4	1.048		
Liq. Mass Density (Std. Cond)	(kg/m3)	781.8	968.5	771.0		
Liq. Vol. Flow (Std. Cond)	(barrel/day)	434.3	23.73	410.6		
Liquid Fraction		1.000	1.000	1.000		
Molar Volume	(m3/kgmole)	0.1627	0.5203	0.1565		
Mass Heat of Vap.	(kJ/kg)	---	---	---		
Phase Fraction [Molar Basis]		0.0000	0.0170	0.9830		
Surface Tension	(dyne/cm)	---	20.30	15.38		
Thermal Conductivity	(W/m-K)	9.974e-002	0.1174	9.881e-002		
Viscosity	(cP)	1.244	519.4	0.8029		
Cv (Semi-Ideal)	(kJ/kgmole-C)	247.4	952.7	---		
Mass Cv (Semi-Ideal)	(kJ/kg-C)	1.958	1.895	---		
Cv	(kJ/kgmole-C)	212.7	871.2	---		
Mass Cv	(kJ/kg-C)	1.683	1.733	---		
Cv (Ent. Method)	(kJ/kgmole-C)	---	---	---		
Mass Cv (Ent. Method)	(kJ/kg-C)	---	---	---		
Cp/Cv (Ent. Method)		---	---	---		
Reid VP at 37.8 C	(psig)	97.87	26.74	100.9		
True VP at 37.8 C	(psig)	475.9	449.8	497.6		
Liq. Vol. Flow - Sum(Std. Cond)	(barrel/day)	23.73	23.73	0.0000		
HHV Molar Basis (Std)	(Btu/SCF)	---	---	---		
HHV Mass Basis (Std)	(kJ/kg)	---	---	---		
CO2 Loading		---	---	---		
CO2 App ML Con	(kgmole/m3)	8.263e-002	2.756e-002	8.580e-002		
CO2 App WT Con	(kgmol/kg)	1.064e-004	2.851e-005	1.120e-004		
Phase Fraction [Act. Vol. Basis]		0.0000	5.440e-002	0.9456		
Mass Exergy	(kJ/kg)	35.50	---	---		
Viscosity Index		32.55	---	---		
Ideal Gas Cp/Cv		1.043	1.010	1.045		
Ideal Gas Cp	(kJ/kgmole-C)	203.6	802.7	193.3		

* Specified by user.

Material Stream: 2 (continued)

Fluid Package: Basis-1
Property Package: Peng-Robinson

PROPERTIES

	Overall	Liquid Phase	Liquid Phase		
Mass Ideal Gas Cp (kJ/kg-C)	1.612	1.596	1.613		
Bubble Point Pressure (psig)	467.5	---	---		

COMPOSITION

Overall Phase

Vapour Fraction 0.0000

COMPONENTS	MOLAR FLOW (kgmole/h)	MOLE FRACTION	MASS FLOW (tonne/d)	MASS FRACTION	LIQUID VOLUME FLOW (m3/h)	LIQUID VOLUME FRACTION
Methane	2.0221	0.1136	0.7786	0.0144	0.1084	0.0364
Ethane	1.1465	0.0644	0.8274	0.0153	0.0969	0.0326
Propane	1.6775	0.0942	1.7753	0.0329	0.1460	0.0490
i-Butane	0.4420	0.0248	0.6166	0.0114	0.0457	0.0154
n-Butane	1.0672	0.0600	1.4887	0.0276	0.1064	0.0357
i-Pentane	0.3860	0.0217	0.6684	0.0124	0.0447	0.0150
n-Pentane	0.4950	0.0278	0.8571	0.0159	0.0567	0.0191
n-Hexane	1.1004	0.0618	2.2760	0.0422	0.1431	0.0481
Nitrogen	0.0228	0.0013	0.0153	0.0003	0.0008	0.0003
CO2	0.2393	0.0134	0.2527	0.0047	0.0128	0.0043
H2S	0.0000	0.0000	0.0000	0.0000	0.0000	0.0000
H2O	0.0107	0.0006	0.0046	0.0001	0.0002	0.0001
NBP[1]95*	0.1457	0.0082	0.2376	0.0044	0.0146	0.0049
NBP[1]121*	0.2063	0.0116	0.3606	0.0067	0.0218	0.0073
NBP[1]147*	0.3061	0.0172	0.5891	0.0109	0.0350	0.0118
NBP[1]171*	0.6492	0.0365	1.3660	0.0253	0.0800	0.0269
NBP[1]195*	0.9179	0.0516	2.0614	0.0382	0.1193	0.0401
NBP[1]222*	0.7271	0.0408	1.7563	0.0325	0.1004	0.0337
NBP[1]248*	0.6282	0.0353	1.6313	0.0302	0.0921	0.0309
NBP[1]273*	0.5177	0.0291	1.4378	0.0266	0.0803	0.0270
NBP[1]299*	0.4103	0.0230	1.2148	0.0225	0.0671	0.0225
NBP[1]325*	0.2995	0.0168	0.9422	0.0175	0.0515	0.0173
NBP[1]351*	0.2442	0.0137	0.8165	0.0151	0.0442	0.0148
NBP[1]377*	0.2240	0.0126	0.7989	0.0148	0.0428	0.0144
NBP[1]402*	0.2058	0.0116	0.7826	0.0145	0.0415	0.0139
NBP[1]428*	0.1959	0.0110	0.7949	0.0147	0.0417	0.0140
NBP[1]454*	0.1955	0.0110	0.8477	0.0157	0.0441	0.0148
NBP[1]480*	0.1981	0.0111	0.9180	0.0170	0.0473	0.0159
NBP[1]505*	0.1920	0.0108	0.9483	0.0176	0.0484	0.0162
NBP[1]531*	0.1852	0.0104	0.9740	0.0180	0.0492	0.0165
NBP[1]557*	0.1784	0.0100	0.9978	0.0185	0.0500	0.0168
NBP[1]582*	0.1706	0.0096	1.0132	0.0188	0.0503	0.0169
NBP[1]608*	0.1643	0.0092	1.0351	0.0192	0.0510	0.0171
NBP[1]634*	0.1611	0.0090	1.0753	0.0199	0.0526	0.0177
NBP[1]659*	0.1586	0.0089	1.1194	0.0207	0.0543	0.0182
NBP[1]685*	0.1641	0.0092	1.2227	0.0227	0.0588	0.0198
NBP[1]711*	0.1715	0.0096	1.3445	0.0249	0.0642	0.0216
NBP[1]736*	0.1697	0.0095	1.3915	0.0258	0.0659	0.0221
NBP[1]762*	0.1653	0.0093	1.4214	0.0263	0.0669	0.0225
NBP[1]788*	0.1585	0.0089	1.4424	0.0267	0.0674	0.0226
NBP[1]825*	0.2655	0.0149	2.5963	0.0481	0.1201	0.0404
NBP[1]873*	0.1830	0.0103	1.9404	0.0359	0.0887	0.0298
NBP[1]926*	0.1437	0.0081	1.6472	0.0305	0.0744	0.0250
NBP[1]978*	0.1474	0.0083	1.8524	0.0343	0.0825	0.0277
NBP[1]1021*	0.0728	0.0041	0.9655	0.0179	0.0426	0.0143
NBP[1]1075*	0.0449	0.0025	0.6310	0.0117	0.0276	0.0093
NBP[1]1123*	0.0417	0.0023	0.6267	0.0116	0.0271	0.0091
NBP[1]1173*	0.0300	0.0017	0.4772	0.0088	0.0205	0.0069
NBP[1]1250*	0.0393	0.0022	0.6767	0.0125	0.0287	0.0096

* Specified by user.

Material Stream: 2 (continued)

Fluid Package: Basis-1
Property Package: Peng-Robinson

COMPOSITION

Overall Phase (continued)

Vapour Fraction 0.0000

COMPONENTS	MOLAR FLOW (kgmole/h)	MOLE FRACTION	MASS FLOW (tonne/d)	MASS FRACTION	LIQUID VOLUME FLOW (m3/h)	LIQUID VOLUME FRACTION
NBP[1]1339*	0.0364	0.0020	0.6999	0.0130	0.0291	0.0098
NBP[1]1432*	0.0257	0.0014	0.5397	0.0100	0.0221	0.0074
NBP[1]1528*	0.0180	0.0010	0.4082	0.0076	0.0165	0.0055
NBP[1]1637*	0.0127	0.0007	0.3047	0.0056	0.0122	0.0041
NBP[1]1732*	0.0101	0.0006	0.2565	0.0048	0.0101	0.0034
NBP[1]1819*	0.0096	0.0005	0.2561	0.0047	0.0100	0.0034
NBP[1]1913*	0.0000	0.0000	0.0000	0.0000	0.0000	0.0000
Total	17.8012	1.0000	53.9808	1.0000	2.9766	1.0000

Liquid Phase

Phase Fraction 1.701e-002

COMPONENTS	MOLAR FLOW (kgmole/h)	MOLE FRACTION	MASS FLOW (tonne/d)	MASS FRACTION	LIQUID VOLUME FLOW (m3/h)	LIQUID VOLUME FRACTION
Methane	0.0348	0.1150	0.0134	0.0037	0.0019	0.0120
Ethane	0.0134	0.0442	0.0097	0.0026	0.0011	0.0073
Propane	0.0157	0.0517	0.0166	0.0045	0.0014	0.0087
i-Butane	0.0037	0.0124	0.0052	0.0014	0.0004	0.0025
n-Butane	0.0082	0.0271	0.0114	0.0031	0.0008	0.0052
i-Pentane	0.0027	0.0090	0.0047	0.0013	0.0003	0.0020
n-Pentane	0.0033	0.0108	0.0057	0.0015	0.0004	0.0024
n-Hexane	0.0064	0.0212	0.0133	0.0036	0.0008	0.0054
Nitrogen	0.0006	0.0021	0.0004	0.0001	0.0000	0.0001
CO2	0.0043	0.0143	0.0046	0.0013	0.0002	0.0015
H2S	0.0000	0.0000	0.0000	0.0000	0.0000	0.0000
H2O	0.0002	0.0006	0.0001	0.0000	0.0000	0.0000
NBP[1]95*	0.0009	0.0031	0.0015	0.0004	0.0001	0.0006
NBP[1]121*	0.0012	0.0041	0.0022	0.0006	0.0001	0.0008
NBP[1]147*	0.0017	0.0057	0.0033	0.0009	0.0002	0.0013
NBP[1]171*	0.0034	0.0113	0.0072	0.0020	0.0004	0.0027
NBP[1]195*	0.0046	0.0151	0.0103	0.0028	0.0006	0.0038
NBP[1]222*	0.0034	0.0114	0.0083	0.0023	0.0005	0.0030
NBP[1]248*	0.0028	0.0094	0.0074	0.0020	0.0004	0.0027
NBP[1]273*	0.0022	0.0074	0.0062	0.0017	0.0003	0.0022
NBP[1]299*	0.0017	0.0056	0.0050	0.0014	0.0003	0.0018
NBP[1]325*	0.0012	0.0040	0.0038	0.0010	0.0002	0.0013
NBP[1]351*	0.0009	0.0031	0.0032	0.0009	0.0002	0.0011
NBP[1]377*	0.0008	0.0028	0.0030	0.0008	0.0002	0.0010
NBP[1]402*	0.0007	0.0025	0.0028	0.0008	0.0002	0.0010
NBP[1]428*	0.0007	0.0023	0.0028	0.0008	0.0001	0.0009
NBP[1]454*	0.0007	0.0022	0.0029	0.0008	0.0002	0.0010
NBP[1]480*	0.0007	0.0022	0.0031	0.0008	0.0002	0.0010
NBP[1]505*	0.0006	0.0021	0.0031	0.0009	0.0002	0.0010
NBP[1]531*	0.0006	0.0020	0.0032	0.0009	0.0002	0.0010
NBP[1]557*	0.0006	0.0019	0.0032	0.0009	0.0002	0.0010
NBP[1]582*	0.0006	0.0018	0.0033	0.0009	0.0002	0.0010
NBP[1]608*	0.0005	0.0018	0.0034	0.0009	0.0002	0.0011
NBP[1]634*	0.0005	0.0018	0.0036	0.0010	0.0002	0.0011
NBP[1]659*	0.0005	0.0018	0.0038	0.0010	0.0002	0.0012
NBP[1]685*	0.0006	0.0019	0.0043	0.0012	0.0002	0.0013
NBP[1]711*	0.0006	0.0020	0.0049	0.0013	0.0002	0.0015
NBP[1]736*	0.0006	0.0021	0.0053	0.0015	0.0003	0.0016
NBP[1]762*	0.0007	0.0022	0.0058	0.0016	0.0003	0.0018
NBP[1]788*	0.0007	0.0023	0.0065	0.0018	0.0003	0.0019
NBP[1]825*	0.0014	0.0046	0.0137	0.0037	0.0006	0.0041
NBP[1]873*	0.0013	0.0043	0.0137	0.0037	0.0006	0.0040

* Specified by user.

Material Stream: 2 (continued)

Fluid Package: Basis-1
Property Package: Peng-Robinson

COMPOSITION

Liquid Phase (continued)

Phase Fraction 1.701e-002

COMPONENTS	MOLAR FLOW (kgmole/h)	MOLE FRACTION	MASS FLOW (tonne/d)	MASS FRACTION	LIQUID VOLUME FLOW (m3/h)	LIQUID VOLUME FRACTION
NBP[1]926*	0.0015	0.0051	0.0177	0.0048	0.0008	0.0051
NBP[1]978*	0.0024	0.0080	0.0303	0.0083	0.0014	0.0087
NBP[1]1021*	0.0021	0.0068	0.0273	0.0075	0.0012	0.0077
NBP[1]1075*	0.0030	0.0098	0.0418	0.0114	0.0018	0.0117
NBP[1]1123*	0.0060	0.0198	0.0902	0.0247	0.0039	0.0250
NBP[1]1173*	0.0108	0.0355	0.1711	0.0468	0.0073	0.0470
NBP[1]1250*	0.0337	0.1112	0.5795	0.1586	0.0246	0.1574
NBP[1]1339*	0.0361	0.1194	0.6954	0.1903	0.0290	0.1855
NBP[1]1432*	0.0257	0.0848	0.5397	0.1477	0.0221	0.1418
NBP[1]1528*	0.0180	0.0595	0.4082	0.1117	0.0165	0.1059
NBP[1]1637*	0.0127	0.0418	0.3047	0.0834	0.0122	0.0780
NBP[1]1732*	0.0101	0.0334	0.2565	0.0702	0.0101	0.0650
NBP[1]1819*	0.0096	0.0318	0.2561	0.0701	0.0100	0.0641
NBP[1]1913*	0.0000	0.0000	0.0000	0.0000	0.0000	0.0000
Total	0.3028	1.0000	3.6542	1.0000	0.1561	1.0000

Liquid Phase

Phase Fraction 0.9830

COMPONENTS	MOLAR FLOW (kgmole/h)	MOLE FRACTION	MASS FLOW (tonne/d)	MASS FRACTION	LIQUID VOLUME FLOW (m3/h)	LIQUID VOLUME FRACTION
Methane	1.9873	0.1136	0.7652	0.0152	0.1065	0.0378
Ethane	1.1332	0.0648	0.8178	0.0162	0.0958	0.0340
Propane	1.6618	0.0950	1.7588	0.0349	0.1446	0.0513
i-Butane	0.4383	0.0250	0.6114	0.0121	0.0453	0.0161
n-Butane	1.0590	0.0605	1.4773	0.0294	0.1055	0.0374
i-Pentane	0.3833	0.0219	0.6637	0.0132	0.0444	0.0157
n-Pentane	0.4917	0.0281	0.8515	0.0169	0.0563	0.0200
n-Hexane	1.0940	0.0625	2.2627	0.0450	0.1423	0.0504
Nitrogen	0.0222	0.0013	0.0149	0.0003	0.0008	0.0003
CO2	0.2349	0.0134	0.2482	0.0049	0.0125	0.0044
H2S	0.0000	0.0000	0.0000	0.0000	0.0000	0.0000
H2O	0.0105	0.0006	0.0045	0.0001	0.0002	0.0001
NBP[1]95*	0.1448	0.0083	0.2360	0.0047	0.0145	0.0051
NBP[1]121*	0.2050	0.0117	0.3585	0.0071	0.0217	0.0077
NBP[1]147*	0.3043	0.0174	0.5858	0.0116	0.0348	0.0123
NBP[1]171*	0.6458	0.0369	1.3588	0.0270	0.0795	0.0282
NBP[1]195*	0.9133	0.0522	2.0511	0.0408	0.1187	0.0421
NBP[1]222*	0.7237	0.0414	1.7480	0.0347	0.0999	0.0354
NBP[1]248*	0.6253	0.0357	1.6240	0.0323	0.0917	0.0325
NBP[1]273*	0.5155	0.0295	1.4316	0.0284	0.0799	0.0283
NBP[1]299*	0.4085	0.0233	1.2098	0.0240	0.0668	0.0237
NBP[1]325*	0.2983	0.0170	0.9385	0.0186	0.0513	0.0182
NBP[1]351*	0.2432	0.0139	0.8133	0.0162	0.0440	0.0156
NBP[1]377*	0.2232	0.0128	0.7959	0.0158	0.0426	0.0151
NBP[1]402*	0.2050	0.0117	0.7797	0.0155	0.0414	0.0147
NBP[1]428*	0.1952	0.0112	0.7921	0.0157	0.0416	0.0147
NBP[1]454*	0.1948	0.0111	0.8447	0.0168	0.0439	0.0156
NBP[1]480*	0.1975	0.0113	0.9149	0.0182	0.0471	0.0167
NBP[1]505*	0.1913	0.0109	0.9451	0.0188	0.0482	0.0171
NBP[1]531*	0.1846	0.0106	0.9708	0.0193	0.0491	0.0174
NBP[1]557*	0.1778	0.0102	0.9946	0.0198	0.0498	0.0177
NBP[1]582*	0.1700	0.0097	1.0099	0.0201	0.0502	0.0178
NBP[1]608*	0.1637	0.0094	1.0317	0.0205	0.0508	0.0180
NBP[1]634*	0.1606	0.0092	1.0718	0.0213	0.0524	0.0186
NBP[1]659*	0.1581	0.0090	1.1156	0.0222	0.0541	0.0192

* Specified by user.

Material Stream: 2 (continued)

Fluid Package: Basis-1
Property Package: Peng-Robinson

COMPOSITION

Liquid Phase (continued)

Phase Fraction 0.9830

COMPONENTS	MOLAR FLOW (kgmole/h)	MOLE FRACTION	MASS FLOW (tonne/d)	MASS FRACTION	LIQUID VOLUME FLOW (m3/h)	LIQUID VOLUME FRACTION
NBP[1]685*	0.1635	0.0093	1.2185	0.0242	0.0586	0.0208
NBP[1]711*	0.1709	0.0098	1.3396	0.0266	0.0639	0.0227
NBP[1]736*	0.1691	0.0097	1.3862	0.0275	0.0657	0.0233
NBP[1]762*	0.1646	0.0094	1.4156	0.0281	0.0666	0.0236
NBP[1]788*	0.1578	0.0090	1.4359	0.0285	0.0671	0.0238
NBP[1]825*	0.2641	0.0151	2.5826	0.0513	0.1195	0.0424
NBP[1]873*	0.1817	0.0104	1.9267	0.0383	0.0881	0.0312
NBP[1]926*	0.1422	0.0081	1.6295	0.0324	0.0736	0.0261
NBP[1]978*	0.1449	0.0083	1.8221	0.0362	0.0811	0.0288
NBP[1]1021*	0.0708	0.0040	0.9382	0.0186	0.0414	0.0147
NBP[1]1075*	0.0419	0.0024	0.5892	0.0117	0.0258	0.0091
NBP[1]1123*	0.0357	0.0020	0.5365	0.0107	0.0232	0.0082
NBP[1]1173*	0.0192	0.0011	0.3061	0.0061	0.0131	0.0047
NBP[1]1250*	0.0056	0.0003	0.0972	0.0019	0.0041	0.0015
NBP[1]1339*	0.0002	0.0000	0.0045	0.0001	0.0002	0.0001
NBP[1]1432*	0.0000	0.0000	0.0000	0.0000	0.0000	0.0000
NBP[1]1528*	0.0000	0.0000	0.0000	0.0000	0.0000	0.0000
NBP[1]1637*	0.0000	0.0000	0.0000	0.0000	0.0000	0.0000
NBP[1]1732*	0.0000	0.0000	0.0000	0.0000	0.0000	0.0000
NBP[1]1819*	0.0000	0.0000	0.0000	0.0000	0.0000	0.0000
NBP[1]1913*	0.0000	0.0000	0.0000	0.0000	0.0000	0.0000
Total	17.4984	1.0000	50.3266	1.0000	2.8205	1.0000

Material Stream: 3

Fluid Package: Basis-1
Property Package: Peng-Robinson

CONDITIONS

		Overall	Aqueous Phase
Vapour / Phase Fraction		0.0000	1.0000
Temperature:	(F)	86.60	86.60
Pressure:	(psig)	2090 *	2090
Molar Flow	(MMSCFD)	2.135	2.135
Mass Flow	(tonne/d)	46.00	46.00
Std Ideal Liq Vol Flow	(barrel/day)	290.0	290.0
Molar Enthalpy	(kJ/kgmole)	-2.856e+005	-2.856e+005
Molar Entropy	(kJ/kgmole-C)	54.92	54.92
Heat Flow	(MMBtu/hr)	-28.79	-28.79
Liq Vol Flow @Std Cond	(barrel/day)	285.1 *	285.1

PROPERTIES

		Overall	Aqueous Phase
Molecular Weight		18.03	18.03
Molar Density	(kgmole/m3)	55.91	55.91
Mass Density	(kg/m3)	1008	1008
Act. Volume Flow	(barrel/day)	287.1	287.1
Mass Enthalpy	(kJ/kg)	-1.584e+004	-1.584e+004
Mass Entropy	(kJ/kg-C)	3.047	3.047
Heat Capacity	(kJ/kgmole-C)	77.42	77.42
Mass Heat Capacity	(kJ/kg-C)	4.295	4.295
LHV Molar Basis (Std)	(Btu/SCF)	1.809e-004	1.809e-004
LHV Mass Basis (Std)	(kJ/kg)	8.858e-003	8.858e-003
Phase Fraction [Vol. Basis]		0.0000	1.000
Phase Fraction [Mass Basis]		0.0000	1.000
Partial Pressure of CO2	(psig)	-14.70	---

* Specified by user.

Material Stream: 3 (continued)

Fluid Package: Basis-1
Property Package: Peng-Robinson

PROPERTIES

	Overall	Aqueous Phase
Cost Based on Flow (Cost/s)	0.0000	0.0000
Act. Gas Flow (ACT_m3/h)	---	---
Avg. Liq. Density (kgmole/m3)	55.35	55.35
Specific Heat (kJ/kgmole-C)	77.42	77.42
Std. Gas Flow (STD_m3/h)	2514	2514
Std. Ideal Liq. Mass Density (kg/m3)	997.8	997.8
Act. Liq. Flow (barrel/day)	287.1	287.1
Z Factor	0.1029	0.1029
Watson K	8.497	8.497
User Property	---	---
Partial Pressure of H2S (psig)	-14.70	---
Cp/(Cp - R)	1.120	1.120
Cp/Cv	1.148	1.148
Heat of Vap. (kJ/kgmole)	1.881e+004	---
Kinematic Viscosity (cSt)	0.7854	0.7854
Liq. Mass Density (Std. Cond) (kg/m3)	1015	1015
Liq. Vol. Flow (Std. Cond) (barrel/day)	285.1	285.1
Liquid Fraction	1.000	1.000
Molar Volume (m3/kgmole)	1.789e-002	1.789e-002
Mass Heat of Vap. (kJ/kg)	1044	---
Phase Fraction [Molar Basis]	0.0000	1.0000
Surface Tension (dyne/cm)	71.15	71.15
Thermal Conductivity (W/m-K)	0.6187	0.6187
Viscosity (cP)	0.7916	0.7916
Cv (Semi-Ideal) (kJ/kgmole-C)	69.10	69.10
Mass Cv (Semi-Ideal) (kJ/kg-C)	3.834	3.834
Cv (kJ/kgmole-C)	67.44	67.44
Mass Cv (kJ/kg-C)	3.741	3.741
Cv (Ent. Method) (kJ/kgmole-C)	66.91	66.91
Mass Cv (Ent. Method) (kJ/kg-C)	3.712	3.712
Cp/Cv (Ent. Method)	1.157	1.157
Reid VP at 37.8 C (psig)	---	---
True VP at 37.8 C (psig)	17.11	17.11
Liq. Vol. Flow - Sum(Std. Cond) (barrel/day)	285.1	285.1
HHV Molar Basis (Std) (Btu/SCF)	46.45	46.45
HHV Mass Basis (Std) (kJ/kg)	2274	2274
CO2 Loading	---	---
CO2 App ML Con (kgmole/m3)	2.222e-002	2.222e-002
CO2 App WT Con (kgmol/kg)	2.204e-005	2.204e-005
Phase Fraction [Act. Vol. Basis]	0.0000	1.000
Mass Exergy (kJ/kg)	17.16	---
Viscosity Index	-0.2852	---
Ideal Gas Cp/Cv	1.329	1.329
Ideal Gas Cp (kJ/kgmole-C)	33.61	33.61
Mass Ideal Gas Cp (kJ/kg-C)	1.864	1.864
Bubble Point Pressure (psig)	13.01	---

COMPOSITION

Overall Phase

Vapour Fraction 0.0000

COMPONENTS	MOLAR FLOW (kgmole/h)	MOLE FRACTION	MASS FLOW (tonne/d)	MASS FRACTION	LIQUID VOLUME FLOW (m3/h)	LIQUID VOLUME FRACTION
Methane	0.0000	0.0000	0.0000	0.0000	0.0000	0.0000
Ethane	0.0000	0.0000	0.0000	0.0000	0.0000	0.0000
Propane	0.0000	0.0000	0.0000	0.0000	0.0000	0.0000
i-Butane	0.0000	0.0000	0.0000	0.0000	0.0000	0.0000
n-Butane	0.0000	0.0000	0.0000	0.0000	0.0000	0.0000

* Specified by user.

Material Stream: 3 (continued)

Fluid Package: Basis-1
Property Package: Peng-Robinson

COMPOSITION

Overall Phase (continued)

Vapour Fraction 0.0000

COMPONENTS	MOLAR FLOW (kgmole/h)	MOLE FRACTION	MASS FLOW (tonne/d)	MASS FRACTION	LIQUID VOLUME FLOW (m3/h)	LIQUID VOLUME FRACTION
i-Pentane	0.0000	0.0000	0.0000	0.0000	0.0000	0.0000
n-Pentane	0.0000	0.0000	0.0000	0.0000	0.0000	0.0000
n-Hexane	0.0000	0.0000	0.0000	0.0000	0.0000	0.0000
Nitrogen	0.0008	0.0000	0.0006	0.0000	0.0000	0.0000
CO2	0.0423	0.0004	0.0446	0.0010	0.0023	0.0012
H2S	0.0000	0.0000	0.0000	0.0000	0.0000	0.0000
H2O	106.2938	0.9996	45.9575	0.9990	1.9188	0.9988
NBP[1]95*	0.0000	0.0000	0.0000	0.0000	0.0000	0.0000
NBP[1]121*	0.0000	0.0000	0.0000	0.0000	0.0000	0.0000
NBP[1]147*	0.0000	0.0000	0.0000	0.0000	0.0000	0.0000
NBP[1]171*	0.0000	0.0000	0.0000	0.0000	0.0000	0.0000
NBP[1]195*	0.0000	0.0000	0.0000	0.0000	0.0000	0.0000
NBP[1]222*	0.0000	0.0000	0.0000	0.0000	0.0000	0.0000
NBP[1]248*	0.0000	0.0000	0.0000	0.0000	0.0000	0.0000
NBP[1]273*	0.0000	0.0000	0.0000	0.0000	0.0000	0.0000
NBP[1]299*	0.0000	0.0000	0.0000	0.0000	0.0000	0.0000
NBP[1]325*	0.0000	0.0000	0.0000	0.0000	0.0000	0.0000
NBP[1]351*	0.0000	0.0000	0.0000	0.0000	0.0000	0.0000
NBP[1]377*	0.0000	0.0000	0.0000	0.0000	0.0000	0.0000
NBP[1]402*	0.0000	0.0000	0.0000	0.0000	0.0000	0.0000
NBP[1]428*	0.0000	0.0000	0.0000	0.0000	0.0000	0.0000
NBP[1]454*	0.0000	0.0000	0.0000	0.0000	0.0000	0.0000
NBP[1]480*	0.0000	0.0000	0.0000	0.0000	0.0000	0.0000
NBP[1]505*	0.0000	0.0000	0.0000	0.0000	0.0000	0.0000
NBP[1]531*	0.0000	0.0000	0.0000	0.0000	0.0000	0.0000
NBP[1]557*	0.0000	0.0000	0.0000	0.0000	0.0000	0.0000
NBP[1]582*	0.0000	0.0000	0.0000	0.0000	0.0000	0.0000
NBP[1]608*	0.0000	0.0000	0.0000	0.0000	0.0000	0.0000
NBP[1]634*	0.0000	0.0000	0.0000	0.0000	0.0000	0.0000
NBP[1]659*	0.0000	0.0000	0.0000	0.0000	0.0000	0.0000
NBP[1]685*	0.0000	0.0000	0.0000	0.0000	0.0000	0.0000
NBP[1]711*	0.0000	0.0000	0.0000	0.0000	0.0000	0.0000
NBP[1]736*	0.0000	0.0000	0.0000	0.0000	0.0000	0.0000
NBP[1]762*	0.0000	0.0000	0.0000	0.0000	0.0000	0.0000
NBP[1]788*	0.0000	0.0000	0.0000	0.0000	0.0000	0.0000
NBP[1]825*	0.0000	0.0000	0.0000	0.0000	0.0000	0.0000
NBP[1]873*	0.0000	0.0000	0.0000	0.0000	0.0000	0.0000
NBP[1]926*	0.0000	0.0000	0.0000	0.0000	0.0000	0.0000
NBP[1]978*	0.0000	0.0000	0.0000	0.0000	0.0000	0.0000
NBP[1]1021*	0.0000	0.0000	0.0000	0.0000	0.0000	0.0000
NBP[1]1075*	0.0000	0.0000	0.0000	0.0000	0.0000	0.0000
NBP[1]1123*	0.0000	0.0000	0.0000	0.0000	0.0000	0.0000
NBP[1]1173*	0.0000	0.0000	0.0000	0.0000	0.0000	0.0000
NBP[1]1250*	0.0000	0.0000	0.0000	0.0000	0.0000	0.0000
NBP[1]1339*	0.0000	0.0000	0.0000	0.0000	0.0000	0.0000
NBP[1]1432*	0.0000	0.0000	0.0000	0.0000	0.0000	0.0000
NBP[1]1528*	0.0000	0.0000	0.0000	0.0000	0.0000	0.0000
NBP[1]1637*	0.0000	0.0000	0.0000	0.0000	0.0000	0.0000
NBP[1]1732*	0.0000	0.0000	0.0000	0.0000	0.0000	0.0000
NBP[1]1819*	0.0000	0.0000	0.0000	0.0000	0.0000	0.0000
NBP[1]1913*	0.0000	0.0000	0.0000	0.0000	0.0000	0.0000
Total	106.3369	1.0000	46.0026	1.0000	1.9210	1.0000

* Specified by user.

Material Stream: 3 (continued)

Fluid Package: Basis-1
Property Package: Peng-Robinson

COMPOSITION

Aqueous Phase

Phase Fraction 1.000

COMPONENTS	MOLAR FLOW (kgmole/h)	MOLE FRACTION	MASS FLOW (tonne/d)	MASS FRACTION	LIQUID VOLUME FLOW (m3/h)	LIQUID VOLUME FRACTION
Methane	0.0000	0.0000	0.0000	0.0000	0.0000	0.0000
Ethane	0.0000	0.0000	0.0000	0.0000	0.0000	0.0000
Propane	0.0000	0.0000	0.0000	0.0000	0.0000	0.0000
i-Butane	0.0000	0.0000	0.0000	0.0000	0.0000	0.0000
n-Butane	0.0000	0.0000	0.0000	0.0000	0.0000	0.0000
i-Pentane	0.0000	0.0000	0.0000	0.0000	0.0000	0.0000
n-Pentane	0.0000	0.0000	0.0000	0.0000	0.0000	0.0000
n-Hexane	0.0000	0.0000	0.0000	0.0000	0.0000	0.0000
Nitrogen	0.0008	0.0000	0.0006	0.0000	0.0000	0.0000
CO2	0.0423	0.0004	0.0446	0.0010	0.0023	0.0012
H2S	0.0000	0.0000	0.0000	0.0000	0.0000	0.0000
H2O	106.2938	0.9996	45.9575	0.9990	1.9188	0.9988
NBP[1]95*	0.0000	0.0000	0.0000	0.0000	0.0000	0.0000
NBP[1]121*	0.0000	0.0000	0.0000	0.0000	0.0000	0.0000
NBP[1]147*	0.0000	0.0000	0.0000	0.0000	0.0000	0.0000
NBP[1]171*	0.0000	0.0000	0.0000	0.0000	0.0000	0.0000
NBP[1]195*	0.0000	0.0000	0.0000	0.0000	0.0000	0.0000
NBP[1]222*	0.0000	0.0000	0.0000	0.0000	0.0000	0.0000
NBP[1]248*	0.0000	0.0000	0.0000	0.0000	0.0000	0.0000
NBP[1]273*	0.0000	0.0000	0.0000	0.0000	0.0000	0.0000
NBP[1]299*	0.0000	0.0000	0.0000	0.0000	0.0000	0.0000
NBP[1]325*	0.0000	0.0000	0.0000	0.0000	0.0000	0.0000
NBP[1]351*	0.0000	0.0000	0.0000	0.0000	0.0000	0.0000
NBP[1]377*	0.0000	0.0000	0.0000	0.0000	0.0000	0.0000
NBP[1]402*	0.0000	0.0000	0.0000	0.0000	0.0000	0.0000
NBP[1]428*	0.0000	0.0000	0.0000	0.0000	0.0000	0.0000
NBP[1]454*	0.0000	0.0000	0.0000	0.0000	0.0000	0.0000
NBP[1]480*	0.0000	0.0000	0.0000	0.0000	0.0000	0.0000
NBP[1]505*	0.0000	0.0000	0.0000	0.0000	0.0000	0.0000
NBP[1]531*	0.0000	0.0000	0.0000	0.0000	0.0000	0.0000
NBP[1]557*	0.0000	0.0000	0.0000	0.0000	0.0000	0.0000
NBP[1]582*	0.0000	0.0000	0.0000	0.0000	0.0000	0.0000
NBP[1]608*	0.0000	0.0000	0.0000	0.0000	0.0000	0.0000
NBP[1]634*	0.0000	0.0000	0.0000	0.0000	0.0000	0.0000
NBP[1]659*	0.0000	0.0000	0.0000	0.0000	0.0000	0.0000
NBP[1]685*	0.0000	0.0000	0.0000	0.0000	0.0000	0.0000
NBP[1]711*	0.0000	0.0000	0.0000	0.0000	0.0000	0.0000
NBP[1]736*	0.0000	0.0000	0.0000	0.0000	0.0000	0.0000
NBP[1]762*	0.0000	0.0000	0.0000	0.0000	0.0000	0.0000
NBP[1]788*	0.0000	0.0000	0.0000	0.0000	0.0000	0.0000
NBP[1]825*	0.0000	0.0000	0.0000	0.0000	0.0000	0.0000
NBP[1]873*	0.0000	0.0000	0.0000	0.0000	0.0000	0.0000
NBP[1]926*	0.0000	0.0000	0.0000	0.0000	0.0000	0.0000
NBP[1]978*	0.0000	0.0000	0.0000	0.0000	0.0000	0.0000
NBP[1]1021*	0.0000	0.0000	0.0000	0.0000	0.0000	0.0000
NBP[1]1075*	0.0000	0.0000	0.0000	0.0000	0.0000	0.0000
NBP[1]1123*	0.0000	0.0000	0.0000	0.0000	0.0000	0.0000
NBP[1]1173*	0.0000	0.0000	0.0000	0.0000	0.0000	0.0000
NBP[1]1250*	0.0000	0.0000	0.0000	0.0000	0.0000	0.0000
NBP[1]1339*	0.0000	0.0000	0.0000	0.0000	0.0000	0.0000
NBP[1]1432*	0.0000	0.0000	0.0000	0.0000	0.0000	0.0000
NBP[1]1528*	0.0000	0.0000	0.0000	0.0000	0.0000	0.0000
NBP[1]1637*	0.0000	0.0000	0.0000	0.0000	0.0000	0.0000
NBP[1]1732*	0.0000	0.0000	0.0000	0.0000	0.0000	0.0000

* Specified by user.

Material Stream: 3 (continued)

Fluid Package: Basis-1
Property Package: Peng-Robinson

COMPOSITION

Aqueous Phase (continued)

Phase Fraction 1.000

COMPONENTS	MOLAR FLOW (kgmole/h)	MOLE FRACTION	MASS FLOW (tonne/d)	MASS FRACTION	LIQUID VOLUME FLOW (m3/h)	LIQUID VOLUME FRACTION
NBP[1]1819*	0.0000	0.0000	0.0000	0.0000	0.0000	0.0000
NBP[1]1913*	0.0000	0.0000	0.0000	0.0000	0.0000	0.0000
Total	106.3369	1.0000	46.0026	1.0000	1.9210	1.0000

Material Stream: 4

Fluid Package: Basis-1
Property Package: Peng-Robinson

CONDITIONS

		Overall	Vapour Phase	Aqueous Phase		
Vapour / Phase Fraction		0.9992	0.9992	0.0008		
Temperature:	(F)	89.00 *	89.00	89.00		
Pressure:	(psig)	2090	2090	2090		
Molar Flow	(MMSCFD)	5.381	5.377	4.470e-003		
Mass Flow	(tonne/d)	137.6	137.5	9.639e-002		
Std Ideal Liq Vol Flow	(barrel/day)	2403	2402	0.6078		
Molar Enthalpy	(kJ/kgmole)	-9.218e+004	-9.202e+004	-2.856e+005		
Molar Entropy	(kJ/kgmole-C)	139.7	139.8	55.33		
Heat Flow	(MMBtu/hr)	-23.42	-23.36	-6.026e-002		
Liq Vol Flow @Std Cond	(barrel/day)	9.528e+005 *	9.521e+005	0.5972		

PROPERTIES

		Overall	Vapour Phase	Aqueous Phase		
Molecular Weight		21.39	21.39	18.04		
Molar Density	(kgmole/m3)	8.289	8.283	55.82		
Mass Density	(kg/m3)	177.3	177.2	1007		
Act. Volume Flow	(barrel/day)	4881	4880	0.6021		
Mass Enthalpy	(kJ/kg)	-4311	-4302	-1.583e+004		
Mass Entropy	(kJ/kg-C)	6.534	6.536	3.067		
Heat Capacity	(kJ/kgmole-C)	72.28	72.28	77.41		
Mass Heat Capacity	(kJ/kg-C)	3.380	3.379	4.291		
LHV Molar Basis (Std)	(Btu/SCF)	---	---	6.218e-004		
LHV Mass Basis (Std)	(kJ/kg)	---	---	3.042e-002		
Phase Fraction [Vol. Basis]		0.9997	0.9997	2.529e-004		
Phase Fraction [Mass Basis]		0.9993	0.9993	7.007e-004		
Partial Pressure of CO2	(psig)	57.08	---	---		
Cost Based on Flow	(Cost/s)	0.0000	0.0000	0.0000		
Act. Gas Flow	(ACT_m3/h)	32.33	32.33	---		
Avg. Liq. Density	(kgmole/m3)	16.84	16.83	55.29		
Specific Heat	(kJ/kgmole-C)	72.28	72.28	77.41		
Std. Gas Flow	(STD_m3/h)	6337	6332	5.264		
Std. Ideal Liq. Mass Density	(kg/m3)	360.1	359.9	997.5		
Act. Liq. Flow	(barrel/day)	0.6021	---	0.6021		
Z Factor		---	0.6913	0.1026		
Watson K		17.28	17.28	8.473		
User Property		---	---	---		
Partial Pressure of H2S	(psig)	-14.69	---	---		
Cp/(Cp - R)		1.130	1.130	1.120		
Cp/Cv		1.988	1.989	1.149		
Heat of Vap.	(kJ/kgmole)	---	---	---		
Kinematic Viscosity	(cSt)	---	0.1150	0.7977		
Liq. Mass Density (Std. Cond)	(kg/m3)	0.9081	0.9082	1015		
Liq. Vol. Flow (Std. Cond)	(barrel/day)	9.528e+005	9.521e+005	0.5972		
Liquid Fraction		8.306e-004	0.0000	1.000		
Molar Volume	(m3/kgmole)	0.1206	0.1207	1.791e-002		

* Specified by user.

Material Stream: 4 (continued)

Fluid Package: Basis-1
Property Package: Peng-Robinson

PROPERTIES

		Overall	Vapour Phase	Aqueous Phase		
Mass Heat of Vap.	(kJ/kg)	---	---	---		
Phase Fraction [Molar Basis]		0.9992	0.9992	0.0008		
Surface Tension	(dyne/cm)	70.87	---	70.87		
Thermal Conductivity	(W/m-K)	---	5.535e-002	0.6196		
Viscosity	(cP)	---	2.037e-002	0.8033		
Cv (Semi-Ideal)	(kJ/kgmole-C)	63.97	63.96	69.10		
Mass Cv (Semi-Ideal)	(kJ/kg-C)	2.991	2.990	3.830		
Cv	(kJ/kgmole-C)	36.36	36.33	67.39		
Mass Cv	(kJ/kg-C)	1.700	1.699	3.735		
Cv (Ent. Method)	(kJ/kgmole-C)	37.47	36.33	66.85		
Mass Cv (Ent. Method)	(kJ/kg-C)	1.752	1.699	3.705		
Cp/Cv (Ent. Method)		1.929	1.989	1.158		
Reid VP at 37.8 C	(psig)	---	---	---		
True VP at 37.8 C	(psig)	3607	---	176.8		
Liq. Vol. Flow - Sum(Std. Cond)	(barrel/day)	9.521e+005	9.521e+005	0.5972		
HHV Molar Basis (Std)	(Btu/SCF)	---	---	46.42		
HHV Mass Basis (Std)	(kJ/kg)	---	---	2271		
CO2 Loading		---	---	---		
CO2 App ML Con	(kgmole/m3)	---	---	5.413e-002		
CO2 App WT Con	(kgmol/kg)	---	---	5.375e-005		
Phase Fraction [Act. Vol. Basis]		0.9999	0.9999	1.233e-004		
Mass Exergy	(kJ/kg)	523.8	---	---		
Viscosity Index		---	---	---		
Ideal Gas Cp/Cv		1.248	1.248	1.329		
Ideal Gas Cp	(kJ/kgmole-C)	41.87	41.87	33.62		
Mass Ideal Gas Cp	(kJ/kg-C)	1.958	1.958	1.863		
Bubble Point Pressure	(psig)	4590	---	---		

COMPOSITION

Overall Phase

Vapour Fraction 0.9992

COMPONENTS	MOLAR FLOW (kgmole/h)	MOLE FRACTION	MASS FLOW (tonne/d)	MASS FRACTION	LIQUID VOLUME FLOW (m3/h)	LIQUID VOLUME FRACTION
Methane	205.0219	0.7649	78.9395	0.5738	10.9860	0.6901
Ethane	27.6541	0.1032	19.9573	0.1451	2.3379	0.1469
Propane	13.5902	0.0507	14.3829	0.1046	1.1828	0.0743
i-Butane	1.5866	0.0059	2.2133	0.0161	0.1641	0.0103
n-Butane	2.8841	0.0108	4.0233	0.0292	0.2874	0.0181
i-Pentane	0.4635	0.0017	0.8025	0.0058	0.0536	0.0034
n-Pentane	0.4652	0.0017	0.8056	0.0059	0.0533	0.0033
n-Hexane	0.3694	0.0014	0.7639	0.0056	0.0480	0.0030
Nitrogen	5.5752	0.0208	3.7483	0.0272	0.1937	0.0122
CO2	9.1335	0.0341	9.6471	0.0701	0.4870	0.0306
H2S	0.0005	0.0000	0.0004	0.0000	0.0000	0.0000
H2O	0.3945	0.0015	0.1706	0.0012	0.0071	0.0004
NBP[1]95*	0.1425	0.0005	0.2323	0.0017	0.0142	0.0009
NBP[1]121*	0.1318	0.0005	0.2305	0.0017	0.0139	0.0009
NBP[1]147*	0.1254	0.0005	0.2414	0.0018	0.0144	0.0009
NBP[1]171*	0.1733	0.0006	0.3646	0.0027	0.0213	0.0013
NBP[1]195*	0.1579	0.0006	0.3546	0.0026	0.0205	0.0013
NBP[1]222*	0.0732	0.0003	0.1768	0.0013	0.0101	0.0006
NBP[1]248*	0.0375	0.0001	0.0974	0.0007	0.0055	0.0003
NBP[1]273*	0.0181	0.0001	0.0503	0.0004	0.0028	0.0002
NBP[1]299*	0.0083	0.0000	0.0245	0.0002	0.0014	0.0001
NBP[1]325*	0.0033	0.0000	0.0105	0.0001	0.0006	0.0000
NBP[1]351*	0.0015	0.0000	0.0050	0.0000	0.0003	0.0000
NBP[1]377*	0.0007	0.0000	0.0025	0.0000	0.0001	0.0000

Licensed to: PETROCHEMICAL ENGINEERIN
* Specified by user.

Material Stream: 4 (continued)

Fluid Package: Basis-1
Property Package: Peng-Robinson

COMPOSITION

Overall Phase (continued)

Vapour Fraction 0.9992

COMPONENTS	MOLAR FLOW (kgmole/h)	MOLE FRACTION	MASS FLOW (tonne/d)	MASS FRACTION	LIQUID VOLUME FLOW (m3/h)	LIQUID VOLUME FRACTION
NBP[1]402*	0.0003	0.0000	0.0013	0.0000	0.0001	0.0000
NBP[1]428*	0.0002	0.0000	0.0007	0.0000	0.0000	0.0000
NBP[1]454*	0.0001	0.0000	0.0003	0.0000	0.0000	0.0000
NBP[1]480*	0.0000	0.0000	0.0002	0.0000	0.0000	0.0000
NBP[1]505*	0.0000	0.0000	0.0001	0.0000	0.0000	0.0000
NBP[1]531*	0.0000	0.0000	0.0000	0.0000	0.0000	0.0000
NBP[1]557*	0.0000	0.0000	0.0000	0.0000	0.0000	0.0000
NBP[1]582*	0.0000	0.0000	0.0000	0.0000	0.0000	0.0000
NBP[1]608*	0.0000	0.0000	0.0000	0.0000	0.0000	0.0000
NBP[1]634*	0.0000	0.0000	0.0000	0.0000	0.0000	0.0000
NBP[1]659*	0.0000	0.0000	0.0000	0.0000	0.0000	0.0000
NBP[1]685*	0.0000	0.0000	0.0000	0.0000	0.0000	0.0000
NBP[1]711*	0.0000	0.0000	0.0000	0.0000	0.0000	0.0000
NBP[1]736*	0.0000	0.0000	0.0000	0.0000	0.0000	0.0000
NBP[1]762*	0.0000	0.0000	0.0000	0.0000	0.0000	0.0000
NBP[1]788*	0.0000	0.0000	0.0000	0.0000	0.0000	0.0000
NBP[1]825*	0.0000	0.0000	0.0000	0.0000	0.0000	0.0000
NBP[1]873*	0.0000	0.0000	0.0000	0.0000	0.0000	0.0000
NBP[1]926*	0.0000	0.0000	0.0000	0.0000	0.0000	0.0000
NBP[1]978*	0.0000	0.0000	0.0000	0.0000	0.0000	0.0000
NBP[1]1021*	0.0000	0.0000	0.0000	0.0000	0.0000	0.0000
NBP[1]1075*	0.0000	0.0000	0.0000	0.0000	0.0000	0.0000
NBP[1]1123*	0.0000	0.0000	0.0000	0.0000	0.0000	0.0000
NBP[1]1173*	0.0000	0.0000	0.0000	0.0000	0.0000	0.0000
NBP[1]1250*	0.0000	0.0000	0.0000	0.0000	0.0000	0.0000
NBP[1]1339*	0.0000	0.0000	0.0000	0.0000	0.0000	0.0000
NBP[1]1432*	0.0000	0.0000	0.0000	0.0000	0.0000	0.0000
NBP[1]1528*	0.0000	0.0000	0.0000	0.0000	0.0000	0.0000
NBP[1]1637*	0.0000	0.0000	0.0000	0.0000	0.0000	0.0000
NBP[1]1732*	0.0000	0.0000	0.0000	0.0000	0.0000	0.0000
NBP[1]1819*	0.0001	0.0000	0.0029	0.0000	0.0001	0.0000
NBP[1]1913*	0.0112	0.0000	0.3148	0.0023	0.0121	0.0008
Total	268.0242	1.0000	137.5655	1.0000	15.9186	1.0000

Vapour Phase

Phase Fraction 0.9992

COMPONENTS	MOLAR FLOW (kgmole/h)	MOLE FRACTION	MASS FLOW (tonne/d)	MASS FRACTION	LIQUID VOLUME FLOW (m3/h)	LIQUID VOLUME FRACTION
Methane	205.0219	0.7656	78.9395	0.5742	10.9860	0.6903
Ethane	27.6541	0.1033	19.9573	0.1452	2.3379	0.1469
Propane	13.5902	0.0507	14.3829	0.1046	1.1828	0.0743
i-Butane	1.5866	0.0059	2.2133	0.0161	0.1641	0.0103
n-Butane	2.8841	0.0108	4.0233	0.0293	0.2874	0.0181
i-Pentane	0.4635	0.0017	0.8025	0.0058	0.0536	0.0034
n-Pentane	0.4652	0.0017	0.8056	0.0059	0.0533	0.0033
n-Hexane	0.3694	0.0014	0.7639	0.0056	0.0480	0.0030
Nitrogen	5.5752	0.0208	3.7483	0.0273	0.1937	0.0122
CO2	9.1333	0.0341	9.6469	0.0702	0.4870	0.0306
H2S	0.0005	0.0000	0.0004	0.0000	0.0000	0.0000
H2O	0.1721	0.0006	0.0744	0.0005	0.0031	0.0002
NBP[1]95*	0.1425	0.0005	0.2323	0.0017	0.0142	0.0009
NBP[1]121*	0.1318	0.0005	0.2305	0.0017	0.0139	0.0009
NBP[1]147*	0.1254	0.0005	0.2414	0.0018	0.0144	0.0009
NBP[1]171*	0.1733	0.0006	0.3646	0.0027	0.0213	0.0013
NBP[1]195*	0.1579	0.0006	0.3546	0.0026	0.0205	0.0013

* Specified by user.

Material Stream: 4 (continued)

Fluid Package: Basis-1
Property Package: Peng-Robinson

COMPOSITION

Vapour Phase (continued)

Phase Fraction 0.9992

COMPONENTS	MOLAR FLOW (kgmole/h)	MOLE FRACTION	MASS FLOW (tonne/d)	MASS FRACTION	LIQUID VOLUME FLOW (m3/h)	LIQUID VOLUME FRACTION
NBP[1]222*	0.0732	0.0003	0.1768	0.0013	0.0101	0.0006
NBP[1]248*	0.0375	0.0001	0.0974	0.0007	0.0055	0.0003
NBP[1]273*	0.0181	0.0001	0.0503	0.0004	0.0028	0.0002
NBP[1]299*	0.0083	0.0000	0.0245	0.0002	0.0014	0.0001
NBP[1]325*	0.0033	0.0000	0.0105	0.0001	0.0006	0.0000
NBP[1]351*	0.0015	0.0000	0.0050	0.0000	0.0003	0.0000
NBP[1]377*	0.0007	0.0000	0.0025	0.0000	0.0001	0.0000
NBP[1]402*	0.0003	0.0000	0.0013	0.0000	0.0001	0.0000
NBP[1]428*	0.0002	0.0000	0.0007	0.0000	0.0000	0.0000
NBP[1]454*	0.0001	0.0000	0.0003	0.0000	0.0000	0.0000
NBP[1]480*	0.0000	0.0000	0.0002	0.0000	0.0000	0.0000
NBP[1]505*	0.0000	0.0000	0.0001	0.0000	0.0000	0.0000
NBP[1]531*	0.0000	0.0000	0.0000	0.0000	0.0000	0.0000
NBP[1]557*	0.0000	0.0000	0.0000	0.0000	0.0000	0.0000
NBP[1]582*	0.0000	0.0000	0.0000	0.0000	0.0000	0.0000
NBP[1]608*	0.0000	0.0000	0.0000	0.0000	0.0000	0.0000
NBP[1]634*	0.0000	0.0000	0.0000	0.0000	0.0000	0.0000
NBP[1]659*	0.0000	0.0000	0.0000	0.0000	0.0000	0.0000
NBP[1]685*	0.0000	0.0000	0.0000	0.0000	0.0000	0.0000
NBP[1]711*	0.0000	0.0000	0.0000	0.0000	0.0000	0.0000
NBP[1]736*	0.0000	0.0000	0.0000	0.0000	0.0000	0.0000
NBP[1]762*	0.0000	0.0000	0.0000	0.0000	0.0000	0.0000
NBP[1]788*	0.0000	0.0000	0.0000	0.0000	0.0000	0.0000
NBP[1]825*	0.0000	0.0000	0.0000	0.0000	0.0000	0.0000
NBP[1]873*	0.0000	0.0000	0.0000	0.0000	0.0000	0.0000
NBP[1]926*	0.0000	0.0000	0.0000	0.0000	0.0000	0.0000
NBP[1]978*	0.0000	0.0000	0.0000	0.0000	0.0000	0.0000
NBP[1]1021*	0.0000	0.0000	0.0000	0.0000	0.0000	0.0000
NBP[1]1075*	0.0000	0.0000	0.0000	0.0000	0.0000	0.0000
NBP[1]1123*	0.0000	0.0000	0.0000	0.0000	0.0000	0.0000
NBP[1]1173*	0.0000	0.0000	0.0000	0.0000	0.0000	0.0000
NBP[1]1250*	0.0000	0.0000	0.0000	0.0000	0.0000	0.0000
NBP[1]1339*	0.0000	0.0000	0.0000	0.0000	0.0000	0.0000
NBP[1]1432*	0.0000	0.0000	0.0000	0.0000	0.0000	0.0000
NBP[1]1528*	0.0000	0.0000	0.0000	0.0000	0.0000	0.0000
NBP[1]1637*	0.0000	0.0000	0.0000	0.0000	0.0000	0.0000
NBP[1]1732*	0.0000	0.0000	0.0000	0.0000	0.0000	0.0000
NBP[1]1819*	0.0001	0.0000	0.0029	0.0000	0.0001	0.0000
NBP[1]1913*	0.0112	0.0000	0.3148	0.0023	0.0121	0.0008
Total	267.8016	1.0000	137.4691	1.0000	15.9145	1.0000

Aqueous Phase

Phase Fraction 8.306e-004

COMPONENTS	MOLAR FLOW (kgmole/h)	MOLE FRACTION	MASS FLOW (tonne/d)	MASS FRACTION	LIQUID VOLUME FLOW (m3/h)	LIQUID VOLUME FRACTION
Methane	0.0000	0.0000	0.0000	0.0000	0.0000	0.0000
Ethane	0.0000	0.0000	0.0000	0.0000	0.0000	0.0000
Propane	0.0000	0.0000	0.0000	0.0000	0.0000	0.0000
i-Butane	0.0000	0.0000	0.0000	0.0000	0.0000	0.0000
n-Butane	0.0000	0.0000	0.0000	0.0000	0.0000	0.0000
i-Pentane	0.0000	0.0000	0.0000	0.0000	0.0000	0.0000
n-Pentane	0.0000	0.0000	0.0000	0.0000	0.0000	0.0000
n-Hexane	0.0000	0.0000	0.0000	0.0000	0.0000	0.0000
Nitrogen	0.0000	0.0000	0.0000	0.0001	0.0000	0.0001
CO2	0.0002	0.0010	0.0002	0.0024	0.0000	0.0029

* Specified by user.

Material Stream: 4 (continued)

Fluid Package: Basis-1
Property Package: Peng-Robinson

COMPOSITION

Aqueous Phase (continued)

Phase Fraction 8.306e-004

COMPONENTS	MOLAR FLOW (kgmole/h)	MOLE FRACTION	MASS FLOW (tonne/d)	MASS FRACTION	LIQUID VOLUME FLOW (m3/h)	LIQUID VOLUME FRACTION
H2S	0.0000	0.0000	0.0000	0.0000	0.0000	0.0000
H2O	0.2224	0.9990	0.0962	0.9976	0.0040	0.9971
NBP[1]95*	0.0000	0.0000	0.0000	0.0000	0.0000	0.0000
NBP[1]121*	0.0000	0.0000	0.0000	0.0000	0.0000	0.0000
NBP[1]147*	0.0000	0.0000	0.0000	0.0000	0.0000	0.0000
NBP[1]171*	0.0000	0.0000	0.0000	0.0000	0.0000	0.0000
NBP[1]195*	0.0000	0.0000	0.0000	0.0000	0.0000	0.0000
NBP[1]222*	0.0000	0.0000	0.0000	0.0000	0.0000	0.0000
NBP[1]248*	0.0000	0.0000	0.0000	0.0000	0.0000	0.0000
NBP[1]273*	0.0000	0.0000	0.0000	0.0000	0.0000	0.0000
NBP[1]299*	0.0000	0.0000	0.0000	0.0000	0.0000	0.0000
NBP[1]325*	0.0000	0.0000	0.0000	0.0000	0.0000	0.0000
NBP[1]351*	0.0000	0.0000	0.0000	0.0000	0.0000	0.0000
NBP[1]377*	0.0000	0.0000	0.0000	0.0000	0.0000	0.0000
NBP[1]402*	0.0000	0.0000	0.0000	0.0000	0.0000	0.0000
NBP[1]428*	0.0000	0.0000	0.0000	0.0000	0.0000	0.0000
NBP[1]454*	0.0000	0.0000	0.0000	0.0000	0.0000	0.0000
NBP[1]480*	0.0000	0.0000	0.0000	0.0000	0.0000	0.0000
NBP[1]505*	0.0000	0.0000	0.0000	0.0000	0.0000	0.0000
NBP[1]531*	0.0000	0.0000	0.0000	0.0000	0.0000	0.0000
NBP[1]557*	0.0000	0.0000	0.0000	0.0000	0.0000	0.0000
NBP[1]582*	0.0000	0.0000	0.0000	0.0000	0.0000	0.0000
NBP[1]608*	0.0000	0.0000	0.0000	0.0000	0.0000	0.0000
NBP[1]634*	0.0000	0.0000	0.0000	0.0000	0.0000	0.0000
NBP[1]659*	0.0000	0.0000	0.0000	0.0000	0.0000	0.0000
NBP[1]685*	0.0000	0.0000	0.0000	0.0000	0.0000	0.0000
NBP[1]711*	0.0000	0.0000	0.0000	0.0000	0.0000	0.0000
NBP[1]736*	0.0000	0.0000	0.0000	0.0000	0.0000	0.0000
NBP[1]762*	0.0000	0.0000	0.0000	0.0000	0.0000	0.0000
NBP[1]788*	0.0000	0.0000	0.0000	0.0000	0.0000	0.0000
NBP[1]825*	0.0000	0.0000	0.0000	0.0000	0.0000	0.0000
NBP[1]873*	0.0000	0.0000	0.0000	0.0000	0.0000	0.0000
NBP[1]926*	0.0000	0.0000	0.0000	0.0000	0.0000	0.0000
NBP[1]978*	0.0000	0.0000	0.0000	0.0000	0.0000	0.0000
NBP[1]1021*	0.0000	0.0000	0.0000	0.0000	0.0000	0.0000
NBP[1]1075*	0.0000	0.0000	0.0000	0.0000	0.0000	0.0000
NBP[1]1123*	0.0000	0.0000	0.0000	0.0000	0.0000	0.0000
NBP[1]1173*	0.0000	0.0000	0.0000	0.0000	0.0000	0.0000
NBP[1]1250*	0.0000	0.0000	0.0000	0.0000	0.0000	0.0000
NBP[1]1339*	0.0000	0.0000	0.0000	0.0000	0.0000	0.0000
NBP[1]1432*	0.0000	0.0000	0.0000	0.0000	0.0000	0.0000
NBP[1]1528*	0.0000	0.0000	0.0000	0.0000	0.0000	0.0000
NBP[1]1637*	0.0000	0.0000	0.0000	0.0000	0.0000	0.0000
NBP[1]1732*	0.0000	0.0000	0.0000	0.0000	0.0000	0.0000
NBP[1]1819*	0.0000	0.0000	0.0000	0.0000	0.0000	0.0000
NBP[1]1913*	0.0000	0.0000	0.0000	0.0000	0.0000	0.0000
Total	0.2226	1.0000	0.0964	1.0000	0.0040	1.0000

Material Stream: 5

Fluid Package: Basis-1
Property Package: Peng-Robinson

CONDITIONS

	Overall	Vapour Phase	Liquid Phase	Aqueous Phase
Vapour / Phase Fraction	0.6644	0.6644	0.0637	0.2719

Licensed to: PETROCHEMICAL ENGINEERIN
* Specified by user.

Material Stream: 5 (continued)

Fluid Package: Basis-1
Property Package: Peng-Robinson

CONDITIONS

		Overall	Vapour Phase	Liquid Phase	Aqueous Phase
Temperature:	(F)	89.98	89.98	89.98	89.98
Pressure:	(psig)	2090	2090	2090	2090
Molar Flow	(MMSCFD)	7.874	5.231	0.5019	2.140
Mass Flow	(tonne/d)	237.5	139.1	52.25	46.16
Std Ideal Liq Vol Flow	(barrel/day)	3142	2371	479.9	291.0
Molar Enthalpy	(kJ/kgmole)	-1.534e+005	-9.314e+004	-2.178e+005	-2.855e+005
Molar Entropy	(kJ/kgmole-C)	120.5	139.7	197.5	55.46
Heat Flow	(MMBtu/hr)	-57.01	-23.00	-5.161	-28.85
Liq Vol Flow @Std Cond	(barrel/day)	2.954e+005 *	9.260e+005	461.5	286.0

PROPERTIES

		Overall	Vapour Phase	Liquid Phase	Aqueous Phase
Molecular Weight		25.24	22.25	87.09	18.04
Molar Density	(kgmole/m3)	10.98	8.487	8.041	55.80
Mass Density	(kg/m3)	277.1	188.8	700.3	1007
Act. Volume Flow	(barrel/day)	5392	4634	469.3	288.4
Mass Enthalpy	(kJ/kg)	-6077	-4186	-2501	-1.583e+004
Mass Entropy	(kJ/kg-C)	4.773	6.278	2.268	3.074
Heat Capacity	(kJ/kgmole-C)	83.30	76.12	183.3	77.41
Mass Heat Capacity	(kJ/kg-C)	3.300	3.421	2.104	4.291
LHV Molar Basis (Std)	(Btu/SCF)	---	---	---	6.334e-004
LHV Mass Basis (Std)	(kJ/kg)	---	---	---	3.099e-002
Phase Fraction [Vol. Basis]		0.7547	0.7547	0.1527	9.262e-002
Phase Fraction [Mass Basis]		0.5858	0.5858	0.2199	0.1943
Partial Pressure of CO2	(psig)	54.43	---	---	---
Cost Based on Flow	(Cost/s)	0.0000	0.0000	0.0000	0.0000
Act. Gas Flow	(ACT_m3/h)	30.70	30.70	---	---
Avg. Liq. Density	(kgmole/m3)	18.84	16.59	7.864	55.30
Specific Heat	(kJ/kgmole-C)	83.30	76.12	183.3	77.41
Std. Gas Flow	(STD_m3/h)	9272	6161	591.0	2521
Std. Ideal Liq. Mass Density	(kg/m3)	475.5	369.1	684.8	997.5
Act. Liq. Flow	(barrel/day)	757.7	---	469.3	288.4
Z Factor		---	0.6735	0.7108	0.1024
Watson K		15.58	16.99	12.28	8.469
User Property		---	---	---	---
Partial Pressure of H2S	(psig)	-14.69	---	---	---
Cp/(Cp - R)		1.111	1.123	1.048	1.120
Cp/Cv		1.471	2.007	1.291	1.149
Heat of Vap.	(kJ/kgmole)	6.038e+004	---	---	---
Kinematic Viscosity	(cSt)	---	0.1117	1.948	0.7558
Liq. Mass Density (Std. Cond)	(kg/m3)	5.058	0.9452	712.1	1015
Liq. Vol. Flow (Std. Cond)	(barrel/day)	2.954e+005	9.260e+005	461.5	286.0
Liquid Fraction		0.3356	0.0000	1.000	1.000
Molar Volume	(m3/kgmole)	9.108e-002	0.1178	0.1244	1.792e-002
Mass Heat of Vap.	(kJ/kg)	2392	---	---	---
Phase Fraction [Molar Basis]		0.6644	0.6644	0.0637	0.2719
Surface Tension	(dyne/cm)	---	---	9.238	70.78
Thermal Conductivity	(W/m-K)	---	5.650e-002	8.530e-002	0.6213
Viscosity	(cP)	---	2.109e-002	1.364	0.7608
Cv (Semi-Ideal)	(kJ/kgmole-C)	74.98	67.80	175.0	69.10
Mass Cv (Semi-Ideal)	(kJ/kg-C)	2.971	3.047	2.009	3.831
Cv	(kJ/kgmole-C)	56.65	37.93	142.0	67.38
Mass Cv	(kJ/kg-C)	2.244	1.705	1.630	3.735
Cv (Ent. Method)	(kJ/kgmole-C)	---	36.85	---	66.76
Mass Cv (Ent. Method)	(kJ/kg-C)	---	1.656	---	3.701
Cp/Cv (Ent. Method)		---	2.065	---	1.160
Reid VP at 37.8 C	(psig)	3319	2452	399.0	---

* Specified by user.

Material Stream: 5 (continued)

Fluid Package: Basis-1
Property Package: Peng-Robinson

PROPERTIES

		Overall	Vapour Phase	Liquid Phase	Aqueous Phase
True VP at 37.8 C	(psig)	6318	2453	2168	182.1
Liq. Vol. Flow - Sum(Std. Cond)	(barrel/day)	9.267e+005	9.260e+005	461.5	286.0
HHV Molar Basis (Std)	(Btu/SCF)	---	---	---	46.42
HHV Mass Basis (Std)	(kJ/kg)	---	---	---	2271
CO2 Loading		---	---	---	---
CO2 App ML Con	(kgmole/m3)	---	---	0.2444	5.118e-002
CO2 App WT Con	(kgmol/kg)	---	---	3.490e-004	5.084e-005
Phase Fraction [Act. Vol. Basis]		0.8595	0.8595	8.703e-002	5.349e-002
Mass Exergy	(kJ/kg)	317.7	---	---	---
Viscosity Index		-33.28	---	---	---
Ideal Gas Cp/Cv		1.215	1.238	1.062	1.329
Ideal Gas Cp	(kJ/kgmole-C)	46.91	43.24	141.8	33.62
Mass Ideal Gas Cp	(kJ/kg-C)	1.859	1.943	1.628	1.864
Bubble Point Pressure	(psig)	6228	---	---	---

COMPOSITION

Overall Phase

Vapour Fraction 0.6644

COMPONENTS	MOLAR FLOW (kgmole/h)	MOLE FRACTION	MASS FLOW (tonne/d)	MASS FRACTION	LIQUID VOLUME FLOW (m3/h)	LIQUID VOLUME FRACTION
Methane	207.0440	0.5280	79.7181	0.3356	11.0944	0.5330
Ethane	28.8006	0.0734	20.7848	0.0875	2.4348	0.1170
Propane	15.2677	0.0389	16.1583	0.0680	1.3288	0.0638
i-Butane	2.0287	0.0052	2.8300	0.0119	0.2098	0.0101
n-Butane	3.9513	0.0101	5.5120	0.0232	0.3938	0.0189
i-Pentane	0.8495	0.0022	1.4710	0.0062	0.0983	0.0047
n-Pentane	0.9602	0.0024	1.6627	0.0070	0.1100	0.0053
n-Hexane	1.4698	0.0037	3.0399	0.0128	0.1911	0.0092
Nitrogen	5.5989	0.0143	3.7642	0.0158	0.1945	0.0093
CO2	9.4151	0.0240	9.9445	0.0419	0.5020	0.0241
H2S	0.0006	0.0000	0.0005	0.0000	0.0000	0.0000
H2O	106.6990	0.2721	46.1326	0.1942	1.9261	0.0925
NBP[1]95*	0.2883	0.0007	0.4699	0.0020	0.0288	0.0014
NBP[1]121*	0.3381	0.0009	0.5912	0.0025	0.0358	0.0017
NBP[1]147*	0.4314	0.0011	0.8304	0.0035	0.0494	0.0024
NBP[1]171*	0.8224	0.0021	1.7306	0.0073	0.1013	0.0049
NBP[1]195*	1.0758	0.0027	2.4160	0.0102	0.1398	0.0067
NBP[1]222*	0.8003	0.0020	1.9331	0.0081	0.1105	0.0053
NBP[1]248*	0.6657	0.0017	1.7287	0.0073	0.0976	0.0047
NBP[1]273*	0.5358	0.0014	1.4881	0.0063	0.0831	0.0040
NBP[1]299*	0.4185	0.0011	1.2393	0.0052	0.0684	0.0033
NBP[1]325*	0.3029	0.0008	0.9528	0.0040	0.0521	0.0025
NBP[1]351*	0.2456	0.0006	0.8214	0.0035	0.0445	0.0021
NBP[1]377*	0.2247	0.0006	0.8014	0.0034	0.0429	0.0021
NBP[1]402*	0.2061	0.0005	0.7838	0.0033	0.0416	0.0020
NBP[1]428*	0.1961	0.0005	0.7956	0.0033	0.0418	0.0020
NBP[1]454*	0.1956	0.0005	0.8480	0.0036	0.0441	0.0021
NBP[1]480*	0.1982	0.0005	0.9182	0.0039	0.0473	0.0023
NBP[1]505*	0.1920	0.0005	0.9484	0.0040	0.0484	0.0023
NBP[1]531*	0.1852	0.0005	0.9740	0.0041	0.0492	0.0024
NBP[1]557*	0.1784	0.0005	0.9978	0.0042	0.0500	0.0024
NBP[1]582*	0.1706	0.0004	1.0132	0.0043	0.0503	0.0024
NBP[1]608*	0.1643	0.0004	1.0351	0.0044	0.0510	0.0025
NBP[1]634*	0.1611	0.0004	1.0753	0.0045	0.0526	0.0025
NBP[1]659*	0.1586	0.0004	1.1194	0.0047	0.0543	0.0026
NBP[1]685*	0.1641	0.0004	1.2227	0.0051	0.0588	0.0028
NBP[1]711*	0.1715	0.0004	1.3445	0.0057	0.0642	0.0031

* Specified by user.

Material Stream: 5 (continued)

Fluid Package: Basis-1
Property Package: Peng-Robinson

COMPOSITION

Overall Phase (continued)

Vapour Fraction 0.6644

COMPONENTS	MOLAR FLOW (kgmole/h)	MOLE FRACTION	MASS FLOW (tonne/d)	MASS FRACTION	LIQUID VOLUME FLOW (m3/h)	LIQUID VOLUME FRACTION
NBP[1]736*	0.1697	0.0004	1.3915	0.0059	0.0659	0.0032
NBP[1]762*	0.1653	0.0004	1.4214	0.0060	0.0669	0.0032
NBP[1]788*	0.1585	0.0004	1.4424	0.0061	0.0674	0.0032
NBP[1]825*	0.2655	0.0007	2.5963	0.0109	0.1201	0.0058
NBP[1]873*	0.1830	0.0005	1.9404	0.0082	0.0887	0.0043
NBP[1]926*	0.1437	0.0004	1.6472	0.0069	0.0744	0.0036
NBP[1]978*	0.1474	0.0004	1.8524	0.0078	0.0825	0.0040
NBP[1]1021*	0.0728	0.0002	0.9655	0.0041	0.0426	0.0020
NBP[1]1075*	0.0449	0.0001	0.6310	0.0027	0.0276	0.0013
NBP[1]1123*	0.0417	0.0001	0.6267	0.0026	0.0271	0.0013
NBP[1]1173*	0.0300	0.0001	0.4772	0.0020	0.0205	0.0010
NBP[1]1250*	0.0393	0.0001	0.6767	0.0028	0.0287	0.0014
NBP[1]1339*	0.0364	0.0001	0.6999	0.0029	0.0291	0.0014
NBP[1]1432*	0.0257	0.0001	0.5397	0.0023	0.0221	0.0011
NBP[1]1528*	0.0180	0.0000	0.4082	0.0017	0.0165	0.0008
NBP[1]1637*	0.0127	0.0000	0.3047	0.0013	0.0122	0.0006
NBP[1]1732*	0.0101	0.0000	0.2565	0.0011	0.0101	0.0005
NBP[1]1819*	0.0097	0.0000	0.2590	0.0011	0.0101	0.0005
NBP[1]1913*	0.0112	0.0000	0.3148	0.0013	0.0121	0.0006
Total	392.1623	1.0000	237.5489	1.0000	20.8162	1.0000

Vapour Phase

Phase Fraction 0.6644

COMPONENTS	MOLAR FLOW (kgmole/h)	MOLE FRACTION	MASS FLOW (tonne/d)	MASS FRACTION	LIQUID VOLUME FLOW (m3/h)	LIQUID VOLUME FRACTION
Methane	197.5775	0.7583	76.0732	0.5467	10.5871	0.6739
Ethane	26.2225	0.1006	18.9242	0.1360	2.2169	0.1411
Propane	13.0983	0.0503	13.8623	0.0996	1.1400	0.0726
i-Butane	1.6359	0.0063	2.2820	0.0164	0.1692	0.0108
n-Butane	3.0834	0.0118	4.3013	0.0309	0.3073	0.0196
i-Pentane	0.6045	0.0023	1.0467	0.0075	0.0700	0.0045
n-Pentane	0.6554	0.0025	1.1349	0.0082	0.0751	0.0048
n-Hexane	0.8360	0.0032	1.7292	0.0124	0.1087	0.0069
Nitrogen	5.4316	0.0208	3.6517	0.0262	0.1887	0.0120
CO2	8.5576	0.0328	9.0388	0.0650	0.4563	0.0290
H2S	0.0005	0.0000	0.0004	0.0000	0.0000	0.0000
H2O	0.1735	0.0007	0.0750	0.0005	0.0031	0.0002
NBP[1]95*	0.1967	0.0008	0.3207	0.0023	0.0197	0.0013
NBP[1]121*	0.2150	0.0008	0.3759	0.0027	0.0227	0.0014
NBP[1]147*	0.2517	0.0010	0.4844	0.0035	0.0288	0.0018
NBP[1]171*	0.4368	0.0017	0.9192	0.0066	0.0538	0.0034
NBP[1]195*	0.5145	0.0020	1.1554	0.0083	0.0668	0.0043
NBP[1]222*	0.3330	0.0013	0.8042	0.0058	0.0460	0.0029
NBP[1]248*	0.2380	0.0009	0.6181	0.0044	0.0349	0.0022
NBP[1]273*	0.1618	0.0006	0.4493	0.0032	0.0251	0.0016
NBP[1]299*	0.1047	0.0004	0.3099	0.0022	0.0171	0.0011
NBP[1]325*	0.0612	0.0002	0.1925	0.0014	0.0105	0.0007
NBP[1]351*	0.0393	0.0002	0.1314	0.0009	0.0071	0.0005
NBP[1]377*	0.0276	0.0001	0.0984	0.0007	0.0053	0.0003
NBP[1]402*	0.0192	0.0001	0.0730	0.0005	0.0039	0.0002
NBP[1]428*	0.0136	0.0001	0.0550	0.0004	0.0029	0.0002
NBP[1]454*	0.0099	0.0000	0.0428	0.0003	0.0022	0.0001
NBP[1]480*	0.0072	0.0000	0.0333	0.0002	0.0017	0.0001
NBP[1]505*	0.0049	0.0000	0.0243	0.0002	0.0012	0.0001
NBP[1]531*	0.0033	0.0000	0.0174	0.0001	0.0009	0.0001

* Specified by user.

Material Stream: 5 (continued)

Fluid Package: Basis-1
Property Package: Peng-Robinson

COMPOSITION

Vapour Phase (continued)

Phase Fraction 0.6644

COMPONENTS	MOLAR FLOW (kgmole/h)	MOLE FRACTION	MASS FLOW (tonne/d)	MASS FRACTION	LIQUID VOLUME FLOW (m3/h)	LIQUID VOLUME FRACTION
NBP[1]557*	0.0022	0.0000	0.0122	0.0001	0.0006	0.0000
NBP[1]582*	0.0014	0.0000	0.0084	0.0001	0.0004	0.0000
NBP[1]608*	0.0009	0.0000	0.0057	0.0000	0.0003	0.0000
NBP[1]634*	0.0006	0.0000	0.0039	0.0000	0.0002	0.0000
NBP[1]659*	0.0004	0.0000	0.0026	0.0000	0.0001	0.0000
NBP[1]685*	0.0002	0.0000	0.0018	0.0000	0.0001	0.0000
NBP[1]711*	0.0002	0.0000	0.0013	0.0000	0.0001	0.0000
NBP[1]736*	0.0001	0.0000	0.0008	0.0000	0.0000	0.0000
NBP[1]762*	0.0001	0.0000	0.0005	0.0000	0.0000	0.0000
NBP[1]788*	0.0000	0.0000	0.0003	0.0000	0.0000	0.0000
NBP[1]825*	0.0000	0.0000	0.0003	0.0000	0.0000	0.0000
NBP[1]873*	0.0000	0.0000	0.0001	0.0000	0.0000	0.0000
NBP[1]926*	0.0000	0.0000	0.0000	0.0000	0.0000	0.0000
NBP[1]978*	0.0000	0.0000	0.0000	0.0000	0.0000	0.0000
NBP[1]1021*	0.0000	0.0000	0.0000	0.0000	0.0000	0.0000
NBP[1]1075*	0.0000	0.0000	0.0000	0.0000	0.0000	0.0000
NBP[1]1123*	0.0000	0.0000	0.0000	0.0000	0.0000	0.0000
NBP[1]1173*	0.0000	0.0000	0.0000	0.0000	0.0000	0.0000
NBP[1]1250*	0.0000	0.0000	0.0000	0.0000	0.0000	0.0000
NBP[1]1339*	0.0000	0.0000	0.0000	0.0000	0.0000	0.0000
NBP[1]1432*	0.0000	0.0000	0.0000	0.0000	0.0000	0.0000
NBP[1]1528*	0.0000	0.0000	0.0000	0.0000	0.0000	0.0000
NBP[1]1637*	0.0022	0.0000	0.0525	0.0004	0.0021	0.0001
NBP[1]1732*	0.0101	0.0000	0.2565	0.0018	0.0101	0.0006
NBP[1]1819*	0.0097	0.0000	0.2590	0.0019	0.0101	0.0006
NBP[1]1913*	0.0112	0.0000	0.3148	0.0023	0.0121	0.0008
Total	260.5541	1.0000	139.1456	1.0000	15.7094	1.0000

Liquid Phase

Phase Fraction 6.374e-002

COMPONENTS	MOLAR FLOW (kgmole/h)	MOLE FRACTION	MASS FLOW (tonne/d)	MASS FRACTION	LIQUID VOLUME FLOW (m3/h)	LIQUID VOLUME FRACTION
Methane	9.4664	0.3787	3.6448	0.0698	0.5073	0.1596
Ethane	2.5781	0.1031	1.8606	0.0356	0.2180	0.0686
Propane	2.1695	0.0868	2.2960	0.0439	0.1888	0.0594
i-Butane	0.3928	0.0157	0.5480	0.0105	0.0406	0.0128
n-Butane	0.8679	0.0347	1.2107	0.0232	0.0865	0.0272
i-Pentane	0.2450	0.0098	0.4243	0.0081	0.0284	0.0089
n-Pentane	0.3048	0.0122	0.5279	0.0101	0.0349	0.0110
n-Hexane	0.6338	0.0254	1.3108	0.0251	0.0824	0.0259
Nitrogen	0.1633	0.0065	0.1098	0.0021	0.0057	0.0018
CO2	0.7597	0.0304	0.8024	0.0154	0.0405	0.0127
H2S	0.0001	0.0000	0.0001	0.0000	0.0000	0.0000
H2O	0.0162	0.0006	0.0070	0.0001	0.0003	0.0001
NBP[1]95*	0.0915	0.0037	0.1492	0.0029	0.0091	0.0029
NBP[1]121*	0.1231	0.0049	0.2153	0.0041	0.0130	0.0041
NBP[1]147*	0.1798	0.0072	0.3460	0.0066	0.0206	0.0065
NBP[1]171*	0.3856	0.0154	0.8114	0.0155	0.0475	0.0149
NBP[1]195*	0.5613	0.0225	1.2606	0.0241	0.0729	0.0229
NBP[1]222*	0.4674	0.0187	1.1289	0.0216	0.0645	0.0203
NBP[1]248*	0.4276	0.0171	1.1106	0.0213	0.0627	0.0197
NBP[1]273*	0.3741	0.0150	1.0389	0.0199	0.0580	0.0182
NBP[1]299*	0.3138	0.0126	0.9293	0.0178	0.0513	0.0161
NBP[1]325*	0.2417	0.0097	0.7602	0.0146	0.0416	0.0131
NBP[1]351*	0.2063	0.0083	0.6900	0.0132	0.0374	0.0118

* Specified by user.

Material Stream: 5 (continued)

Fluid Package: Basis-1
Property Package: Peng-Robinson

COMPOSITION

Liquid Phase (continued)

Phase Fraction 6.374e-002

COMPONENTS	MOLAR FLOW (kgmole/h)	MOLE FRACTION	MASS FLOW (tonne/d)	MASS FRACTION	LIQUID VOLUME FLOW (m3/h)	LIQUID VOLUME FRACTION
NBP[1]377*	0.1971	0.0079	0.7030	0.0135	0.0377	0.0118
NBP[1]402*	0.1869	0.0075	0.7108	0.0136	0.0377	0.0119
NBP[1]428*	0.1825	0.0073	0.7405	0.0142	0.0389	0.0122
NBP[1]454*	0.1857	0.0074	0.8052	0.0154	0.0419	0.0132
NBP[1]480*	0.1910	0.0076	0.8849	0.0169	0.0456	0.0143
NBP[1]505*	0.1871	0.0075	0.9240	0.0177	0.0471	0.0148
NBP[1]531*	0.1819	0.0073	0.9566	0.0183	0.0484	0.0152
NBP[1]557*	0.1762	0.0071	0.9856	0.0189	0.0494	0.0155
NBP[1]582*	0.1692	0.0068	1.0048	0.0192	0.0499	0.0157
NBP[1]608*	0.1634	0.0065	1.0294	0.0197	0.0507	0.0160
NBP[1]634*	0.1605	0.0064	1.0714	0.0205	0.0524	0.0165
NBP[1]659*	0.1582	0.0063	1.1168	0.0214	0.0542	0.0170
NBP[1]685*	0.1639	0.0066	1.2209	0.0234	0.0587	0.0185
NBP[1]711*	0.1714	0.0069	1.3432	0.0257	0.0641	0.0202
NBP[1]736*	0.1696	0.0068	1.3907	0.0266	0.0659	0.0207
NBP[1]762*	0.1652	0.0066	1.4209	0.0272	0.0668	0.0210
NBP[1]788*	0.1584	0.0063	1.4420	0.0276	0.0674	0.0212
NBP[1]825*	0.2654	0.0106	2.5960	0.0497	0.1201	0.0378
NBP[1]873*	0.1830	0.0073	1.9403	0.0371	0.0887	0.0279
NBP[1]926*	0.1437	0.0058	1.6471	0.0315	0.0744	0.0234
NBP[1]978*	0.1474	0.0059	1.8524	0.0355	0.0825	0.0260
NBP[1]1021*	0.0728	0.0029	0.9655	0.0185	0.0426	0.0134
NBP[1]1075*	0.0449	0.0018	0.6310	0.0121	0.0276	0.0087
NBP[1]1123*	0.0417	0.0017	0.6267	0.0120	0.0271	0.0085
NBP[1]1173*	0.0300	0.0012	0.4772	0.0091	0.0205	0.0064
NBP[1]1250*	0.0393	0.0016	0.6767	0.0130	0.0287	0.0090
NBP[1]1339*	0.0364	0.0015	0.6999	0.0134	0.0291	0.0092
NBP[1]1432*	0.0257	0.0010	0.5397	0.0103	0.0221	0.0070
NBP[1]1528*	0.0180	0.0007	0.4082	0.0078	0.0165	0.0052
NBP[1]1637*	0.0105	0.0004	0.2521	0.0048	0.0101	0.0032
NBP[1]1732*	0.0000	0.0000	0.0000	0.0000	0.0000	0.0000
NBP[1]1819*	0.0000	0.0000	0.0000	0.0000	0.0000	0.0000
NBP[1]1913*	0.0000	0.0000	0.0000	0.0000	0.0000	0.0000
Total	24.9971	1.0000	52.2467	1.0000	3.1788	1.0000

Aqueous Phase

Phase Fraction 0.2719

COMPONENTS	MOLAR FLOW (kgmole/h)	MOLE FRACTION	MASS FLOW (tonne/d)	MASS FRACTION	LIQUID VOLUME FLOW (m3/h)	LIQUID VOLUME FRACTION
Methane	0.0001	0.0000	0.0000	0.0000	0.0000	0.0000
Ethane	0.0000	0.0000	0.0000	0.0000	0.0000	0.0000
Propane	0.0000	0.0000	0.0000	0.0000	0.0000	0.0000
i-Butane	0.0000	0.0000	0.0000	0.0000	0.0000	0.0000
n-Butane	0.0000	0.0000	0.0000	0.0000	0.0000	0.0000
i-Pentane	0.0000	0.0000	0.0000	0.0000	0.0000	0.0000
n-Pentane	0.0000	0.0000	0.0000	0.0000	0.0000	0.0000
n-Hexane	0.0000	0.0000	0.0000	0.0000	0.0000	0.0000
Nitrogen	0.0040	0.0000	0.0027	0.0001	0.0001	0.0001
CO2	0.0978	0.0009	0.1033	0.0022	0.0052	0.0027
H2S	0.0000	0.0000	0.0000	0.0000	0.0000	0.0000
H2O	106.5092	0.9990	46.0506	0.9977	1.9226	0.9972
NBP[1]95*	0.0000	0.0000	0.0000	0.0000	0.0000	0.0000
NBP[1]121*	0.0000	0.0000	0.0000	0.0000	0.0000	0.0000
NBP[1]147*	0.0000	0.0000	0.0000	0.0000	0.0000	0.0000
NBP[1]171*	0.0000	0.0000	0.0000	0.0000	0.0000	0.0000

* Specified by user.

Material Stream: 5 (continued)

Fluid Package: Basis-1
Property Package: Peng-Robinson

COMPOSITION

Aqueous Phase (continued)

Phase Fraction 0.2719

COMPONENTS	MOLAR FLOW (kgmole/h)	MOLE FRACTION	MASS FLOW (tonne/d)	MASS FRACTION	LIQUID VOLUME FLOW (m3/h)	LIQUID VOLUME FRACTION
NBP[1]195*	0.0000	0.0000	0.0000	0.0000	0.0000	0.0000
NBP[1]222*	0.0000	0.0000	0.0000	0.0000	0.0000	0.0000
NBP[1]248*	0.0000	0.0000	0.0000	0.0000	0.0000	0.0000
NBP[1]273*	0.0000	0.0000	0.0000	0.0000	0.0000	0.0000
NBP[1]299*	0.0000	0.0000	0.0000	0.0000	0.0000	0.0000
NBP[1]325*	0.0000	0.0000	0.0000	0.0000	0.0000	0.0000
NBP[1]351*	0.0000	0.0000	0.0000	0.0000	0.0000	0.0000
NBP[1]377*	0.0000	0.0000	0.0000	0.0000	0.0000	0.0000
NBP[1]402*	0.0000	0.0000	0.0000	0.0000	0.0000	0.0000
NBP[1]428*	0.0000	0.0000	0.0000	0.0000	0.0000	0.0000
NBP[1]454*	0.0000	0.0000	0.0000	0.0000	0.0000	0.0000
NBP[1]480*	0.0000	0.0000	0.0000	0.0000	0.0000	0.0000
NBP[1]505*	0.0000	0.0000	0.0000	0.0000	0.0000	0.0000
NBP[1]531*	0.0000	0.0000	0.0000	0.0000	0.0000	0.0000
NBP[1]557*	0.0000	0.0000	0.0000	0.0000	0.0000	0.0000
NBP[1]582*	0.0000	0.0000	0.0000	0.0000	0.0000	0.0000
NBP[1]608*	0.0000	0.0000	0.0000	0.0000	0.0000	0.0000
NBP[1]634*	0.0000	0.0000	0.0000	0.0000	0.0000	0.0000
NBP[1]659*	0.0000	0.0000	0.0000	0.0000	0.0000	0.0000
NBP[1]685*	0.0000	0.0000	0.0000	0.0000	0.0000	0.0000
NBP[1]711*	0.0000	0.0000	0.0000	0.0000	0.0000	0.0000
NBP[1]736*	0.0000	0.0000	0.0000	0.0000	0.0000	0.0000
NBP[1]762*	0.0000	0.0000	0.0000	0.0000	0.0000	0.0000
NBP[1]788*	0.0000	0.0000	0.0000	0.0000	0.0000	0.0000
NBP[1]825*	0.0000	0.0000	0.0000	0.0000	0.0000	0.0000
NBP[1]873*	0.0000	0.0000	0.0000	0.0000	0.0000	0.0000
NBP[1]926*	0.0000	0.0000	0.0000	0.0000	0.0000	0.0000
NBP[1]978*	0.0000	0.0000	0.0000	0.0000	0.0000	0.0000
NBP[1]1021*	0.0000	0.0000	0.0000	0.0000	0.0000	0.0000
NBP[1]1075*	0.0000	0.0000	0.0000	0.0000	0.0000	0.0000
NBP[1]1123*	0.0000	0.0000	0.0000	0.0000	0.0000	0.0000
NBP[1]1173*	0.0000	0.0000	0.0000	0.0000	0.0000	0.0000
NBP[1]1250*	0.0000	0.0000	0.0000	0.0000	0.0000	0.0000
NBP[1]1339*	0.0000	0.0000	0.0000	0.0000	0.0000	0.0000
NBP[1]1432*	0.0000	0.0000	0.0000	0.0000	0.0000	0.0000
NBP[1]1528*	0.0000	0.0000	0.0000	0.0000	0.0000	0.0000
NBP[1]1637*	0.0000	0.0000	0.0000	0.0000	0.0000	0.0000
NBP[1]1732*	0.0000	0.0000	0.0000	0.0000	0.0000	0.0000
NBP[1]1819*	0.0000	0.0000	0.0000	0.0000	0.0000	0.0000
NBP[1]1913*	0.0000	0.0000	0.0000	0.0000	0.0000	0.0000
Total	106.6110	1.0000	46.1566	1.0000	1.9280	1.0000

Material Stream: 6

Fluid Package: Basis-1
Property Package: Peng-Robinson

CONDITIONS

		Overall	Vapour Phase	Liquid Phase	Aqueous Phase
Vapour / Phase Fraction		0.6693	0.6693	0.0591	0.2716
Temperature:	(F)	105.0 *	105.0	105.0	105.0
Pressure:	(psig)	2090	2090	2090	2090
Molar Flow	(MMSCFD)	7.874	5.270	0.4654	2.138
Mass Flow	(tonne/d)	237.5	140.6	50.84	46.11
Std Ideal Liq Vol Flow	(barrel/day)	3142	2391	460.2	290.7
Molar Enthalpy	(kJ/kgmole)	-1.527e+005	-9.272e+004	-2.243e+005	-2.849e+005

* Specified by user.

Material Stream: 6 (continued)

Fluid Package: Basis-1
Property Package: Peng-Robinson

CONDITIONS

	Overall	Vapour Phase	Liquid Phase	Aqueous Phase
Molar Entropy (kJ/kgmole-C)	122.8	141.7	208.3	57.54
Heat Flow (MMBtu/hr)	-56.75	-23.07	-4.928	-28.76
Liq Vol Flow @Std Cond (barrel/day)	2.954e+005 *	9.328e+005	441.5	285.7

PROPERTIES

	Overall	Vapour Phase	Liquid Phase	Aqueous Phase
Molecular Weight	25.24	22.32	91.38	18.04
Molar Density (kgmole/m3)	10.34	7.952	7.690	55.46
Mass Density (kg/m3)	260.9	177.5	702.7	1000
Act. Volume Flow (barrel/day)	5728	4983	455.0	289.9
Mass Enthalpy (kJ/kg)	-6049	-4154	-2455	-1.579e+004
Mass Entropy (kJ/kg-C)	4.864	6.347	2.279	3.190
Heat Capacity (kJ/kgmole-C)	81.84	73.70	194.3	77.43
Mass Heat Capacity (kJ/kg-C)	3.243	3.302	2.127	4.293
LHV Molar Basis (Std) (Btu/SCF)	---	---	---	9.889e-004
LHV Mass Basis (Std) (kJ/kg)	---	---	---	4.839e-002
Phase Fraction [Vol. Basis]	0.7610	0.7610	0.1464	9.251e-002
Phase Fraction [Mass Basis]	0.5919	0.5919	0.2140	0.1941
Partial Pressure of CO2 (psig)	54.66	---	---	---
Cost Based on Flow (Cost/s)	0.0000	0.0000	0.0000	0.0000
Act. Gas Flow (ACT_m3/h)	33.01	33.01	---	---
Avg. Liq. Density (kgmole/m3)	18.84	16.57	7.605	55.31
Specific Heat (kJ/kgmole-C)	81.84	73.70	194.3	77.43
Std. Gas Flow (STD_m3/h)	9272	6206	548.1	2518
Std. Ideal Liq. Mass Density (kg/m3)	475.5	369.8	694.9	997.6
Act. Liq. Flow (barrel/day)	744.9	---	455.0	289.9
Z Factor	---	0.6997	0.7235	0.1003
Watson K	15.58	16.97	12.21	8.472
User Property	---	---	---	---
Partial Pressure of H2S (psig)	-14.69	---	---	---
Cp/(Cp - R)	1.113	1.127	1.045	1.120
Cp/Cv	1.435	1.919	1.280	1.152
Heat of Vap. (kJ/kgmole)	6.038e+004	---	---	---
Kinematic Viscosity (cSt)	---	0.1151	2.090	0.6444
Liq. Mass Density (Std. Cond) (kg/m3)	5.058	0.9481	724.3	1015
Liq. Vol. Flow (Std. Cond) (barrel/day)	2.954e+005	9.328e+005	441.5	285.7
Liquid Fraction	0.3307	0.0000	1.000	1.000
Molar Volume (m3/kgmole)	9.675e-002	0.1258	0.1300	1.803e-002
Mass Heat of Vap. (kJ/kg)	2392	---	---	---
Phase Fraction [Molar Basis]	0.6693	0.6693	0.0591	0.2716
Surface Tension (dyne/cm)	---	---	9.330	69.34
Thermal Conductivity (W/m-K)	---	5.521e-002	8.535e-002	0.6322
Viscosity (cP)	---	2.043e-002	1.469	0.6446
Cv (Semi-Ideal) (kJ/kgmole-C)	73.53	65.38	186.0	69.12
Mass Cv (Semi-Ideal) (kJ/kg-C)	2.913	2.929	2.036	3.832
Cv (kJ/kgmole-C)	57.05	38.40	151.9	67.19
Mass Cv (kJ/kg-C)	2.260	1.720	1.662	3.725
Cv (Ent. Method) (kJ/kgmole-C)	---	37.84	---	66.40
Mass Cv (Ent. Method) (kJ/kg-C)	---	1.695	---	3.681
Cp/Cv (Ent. Method)	---	1.947	---	1.166
Reid VP at 37.8 C (psig)	3319	2401	369.1	---
True VP at 37.8 C (psig)	6318	2875	2053	380.5
Liq. Vol. Flow - Sum(Std. Cond) (barrel/day)	9.335e+005	9.328e+005	441.5	285.7
HHV Molar Basis (Std) (Btu/SCF)	---	---	---	46.43
HHV Mass Basis (Std) (kJ/kg)	---	---	---	2272
CO2 Loading	---	---	---	---
CO2 App ML Con (kgmole/m3)	---	---	0.2248	4.588e-002

* Specified by user.

Material Stream: 6 (continued)

Fluid Package: Basis-1
Property Package: Peng-Robinson

PROPERTIES

	Overall	Vapour Phase	Liquid Phase	Aqueous Phase
CO2 App WT Con (kgmol/kg)	---	---	3.200e-004	4.587e-005
Phase Fraction [Act. Vol. Basis]	0.8699	0.8699	7.945e-002	5.061e-002
Mass Exergy (kJ/kg)	318.7	---	---	---
Viscosity Index	-38.22	---	---	---
Ideal Gas Cp/Cv	1.212	1.234	1.058	1.328
Ideal Gas Cp (kJ/kgmole-C)	47.49	43.89	151.7	33.67
Mass Ideal Gas Cp (kJ/kg-C)	1.882	1.966	1.661	1.867
Bubble Point Pressure (psig)	6321	---	---	---

COMPOSITION

Overall Phase

Vapour Fraction 0.6693

COMPONENTS	MOLAR FLOW (kgmole/h)	MOLE FRACTION	MASS FLOW (tonne/d)	MASS FRACTION	LIQUID VOLUME FLOW (m3/h)	LIQUID VOLUME FRACTION
Methane	207.0440	0.5280	79.7181	0.3356	11.0944	0.5330
Ethane	28.8006	0.0734	20.7848	0.0875	2.4348	0.1170
Propane	15.2677	0.0389	16.1583	0.0680	1.3288	0.0638
i-Butane	2.0287	0.0052	2.8300	0.0119	0.2098	0.0101
n-Butane	3.9513	0.0101	5.5120	0.0232	0.3938	0.0189
i-Pentane	0.8495	0.0022	1.4710	0.0062	0.0983	0.0047
n-Pentane	0.9602	0.0024	1.6627	0.0070	0.1100	0.0053
n-Hexane	1.4698	0.0037	3.0399	0.0128	0.1911	0.0092
Nitrogen	5.5989	0.0143	3.7642	0.0158	0.1945	0.0093
CO2	9.4151	0.0240	9.9445	0.0419	0.5020	0.0241
H2S	0.0006	0.0000	0.0005	0.0000	0.0000	0.0000
H2O	106.6990	0.2721	46.1326	0.1942	1.9261	0.0925
NBP[1]95*	0.2883	0.0007	0.4699	0.0020	0.0288	0.0014
NBP[1]121*	0.3381	0.0009	0.5912	0.0025	0.0358	0.0017
NBP[1]147*	0.4314	0.0011	0.8304	0.0035	0.0494	0.0024
NBP[1]171*	0.8224	0.0021	1.7306	0.0073	0.1013	0.0049
NBP[1]195*	1.0758	0.0027	2.4160	0.0102	0.1398	0.0067
NBP[1]222*	0.8003	0.0020	1.9331	0.0081	0.1105	0.0053
NBP[1]248*	0.6657	0.0017	1.7287	0.0073	0.0976	0.0047
NBP[1]273*	0.5358	0.0014	1.4881	0.0063	0.0831	0.0040
NBP[1]299*	0.4185	0.0011	1.2393	0.0052	0.0684	0.0033
NBP[1]325*	0.3029	0.0008	0.9528	0.0040	0.0521	0.0025
NBP[1]351*	0.2456	0.0006	0.8214	0.0035	0.0445	0.0021
NBP[1]377*	0.2247	0.0006	0.8014	0.0034	0.0429	0.0021
NBP[1]402*	0.2061	0.0005	0.7838	0.0033	0.0416	0.0020
NBP[1]428*	0.1961	0.0005	0.7956	0.0033	0.0418	0.0020
NBP[1]454*	0.1956	0.0005	0.8480	0.0036	0.0441	0.0021
NBP[1]480*	0.1982	0.0005	0.9182	0.0039	0.0473	0.0023
NBP[1]505*	0.1920	0.0005	0.9484	0.0040	0.0484	0.0023
NBP[1]531*	0.1852	0.0005	0.9740	0.0041	0.0492	0.0024
NBP[1]557*	0.1784	0.0005	0.9978	0.0042	0.0500	0.0024
NBP[1]582*	0.1706	0.0004	1.0132	0.0043	0.0503	0.0024
NBP[1]608*	0.1643	0.0004	1.0351	0.0044	0.0510	0.0025
NBP[1]634*	0.1611	0.0004	1.0753	0.0045	0.0526	0.0025
NBP[1]659*	0.1586	0.0004	1.1194	0.0047	0.0543	0.0026
NBP[1]685*	0.1641	0.0004	1.2227	0.0051	0.0588	0.0028
NBP[1]711*	0.1715	0.0004	1.3445	0.0057	0.0642	0.0031
NBP[1]736*	0.1697	0.0004	1.3915	0.0059	0.0659	0.0032
NBP[1]762*	0.1653	0.0004	1.4214	0.0060	0.0669	0.0032
NBP[1]788*	0.1585	0.0004	1.4424	0.0061	0.0674	0.0032
NBP[1]825*	0.2655	0.0007	2.5963	0.0109	0.1201	0.0058
NBP[1]873*	0.1830	0.0005	1.9404	0.0082	0.0887	0.0043
NBP[1]926*	0.1437	0.0004	1.6472	0.0069	0.0744	0.0036

* Specified by user.

Material Stream: 6 (continued)

Fluid Package: Basis-1
Property Package: Peng-Robinson

COMPOSITION

Overall Phase (continued)

Vapour Fraction 0.6693

COMPONENTS	MOLAR FLOW (kgmole/h)	MOLE FRACTION	MASS FLOW (tonne/d)	MASS FRACTION	LIQUID VOLUME FLOW (m3/h)	LIQUID VOLUME FRACTION
NBP[1]978*	0.1474	0.0004	1.8524	0.0078	0.0825	0.0040
NBP[1]1021*	0.0728	0.0002	0.9655	0.0041	0.0426	0.0020
NBP[1]1075*	0.0449	0.0001	0.6310	0.0027	0.0276	0.0013
NBP[1]1123*	0.0417	0.0001	0.6267	0.0026	0.0271	0.0013
NBP[1]1173*	0.0300	0.0001	0.4772	0.0020	0.0205	0.0010
NBP[1]1250*	0.0393	0.0001	0.6767	0.0028	0.0287	0.0014
NBP[1]1339*	0.0364	0.0001	0.6999	0.0029	0.0291	0.0014
NBP[1]1432*	0.0257	0.0001	0.5397	0.0023	0.0221	0.0011
NBP[1]1528*	0.0180	0.0000	0.4082	0.0017	0.0165	0.0008
NBP[1]1637*	0.0127	0.0000	0.3047	0.0013	0.0122	0.0006
NBP[1]1732*	0.0101	0.0000	0.2565	0.0011	0.0101	0.0005
NBP[1]1819*	0.0097	0.0000	0.2590	0.0011	0.0101	0.0005
NBP[1]1913*	0.0112	0.0000	0.3148	0.0013	0.0121	0.0006
Total	392.1623	1.0000	237.5489	1.0000	20.8162	1.0000

Vapour Phase

Phase Fraction 0.6693

COMPONENTS	MOLAR FLOW (kgmole/h)	MOLE FRACTION	MASS FLOW (tonne/d)	MASS FRACTION	LIQUID VOLUME FLOW (m3/h)	LIQUID VOLUME FRACTION
Methane	198.5586	0.7565	76.4509	0.5437	10.6397	0.6716
Ethane	26.4727	0.1009	19.1048	0.1359	2.2380	0.1413
Propane	13.2904	0.0506	14.0656	0.1000	1.1567	0.0730
i-Butane	1.6672	0.0064	2.3257	0.0165	0.1724	0.0109
n-Butane	3.1512	0.0120	4.3958	0.0313	0.3140	0.0198
i-Pentane	0.6210	0.0024	1.0753	0.0076	0.0719	0.0045
n-Pentane	0.6756	0.0026	1.1699	0.0083	0.0774	0.0049
n-Hexane	0.8700	0.0033	1.7994	0.0128	0.1131	0.0071
Nitrogen	5.4494	0.0208	3.6637	0.0261	0.1893	0.0119
CO2	8.6492	0.0330	9.1356	0.0650	0.4612	0.0291
H2S	0.0005	0.0000	0.0004	0.0000	0.0000	0.0000
H2O	0.2615	0.0010	0.1131	0.0008	0.0047	0.0003
NBP[1]95*	0.2026	0.0008	0.3303	0.0023	0.0202	0.0013
NBP[1]121*	0.2224	0.0008	0.3889	0.0028	0.0235	0.0015
NBP[1]147*	0.2617	0.0010	0.5037	0.0036	0.0300	0.0019
NBP[1]171*	0.4563	0.0017	0.9601	0.0068	0.0562	0.0035
NBP[1]195*	0.5397	0.0021	1.2121	0.0086	0.0701	0.0044
NBP[1]222*	0.3510	0.0013	0.8477	0.0060	0.0484	0.0031
NBP[1]248*	0.2519	0.0010	0.6543	0.0047	0.0369	0.0023
NBP[1]273*	0.1719	0.0007	0.4773	0.0034	0.0266	0.0017
NBP[1]299*	0.1115	0.0004	0.3303	0.0023	0.0182	0.0012
NBP[1]325*	0.0654	0.0002	0.2057	0.0015	0.0112	0.0007
NBP[1]351*	0.0420	0.0002	0.1406	0.0010	0.0076	0.0005
NBP[1]377*	0.0296	0.0001	0.1054	0.0007	0.0056	0.0004
NBP[1]402*	0.0206	0.0001	0.0783	0.0006	0.0042	0.0003
NBP[1]428*	0.0145	0.0001	0.0590	0.0004	0.0031	0.0002
NBP[1]454*	0.0106	0.0000	0.0458	0.0003	0.0024	0.0002
NBP[1]480*	0.0077	0.0000	0.0356	0.0003	0.0018	0.0001
NBP[1]505*	0.0053	0.0000	0.0260	0.0002	0.0013	0.0001
NBP[1]531*	0.0035	0.0000	0.0185	0.0001	0.0009	0.0001
NBP[1]557*	0.0023	0.0000	0.0130	0.0001	0.0006	0.0000
NBP[1]582*	0.0015	0.0000	0.0089	0.0001	0.0004	0.0000
NBP[1]608*	0.0010	0.0000	0.0060	0.0000	0.0003	0.0000
NBP[1]634*	0.0006	0.0000	0.0041	0.0000	0.0002	0.0000
NBP[1]659*	0.0004	0.0000	0.0027	0.0000	0.0001	0.0000
NBP[1]685*	0.0003	0.0000	0.0019	0.0000	0.0001	0.0000

* Specified by user.

Material Stream: 6 (continued)

Fluid Package: Basis-1
Property Package: Peng-Robinson

COMPOSITION

Vapour Phase (continued)

Phase Fraction 0.6693

COMPONENTS	MOLAR FLOW (kgmole/h)	MOLE FRACTION	MASS FLOW (tonne/d)	MASS FRACTION	LIQUID VOLUME FLOW (m3/h)	LIQUID VOLUME FRACTION
NBP[1]711*	0.0002	0.0000	0.0013	0.0000	0.0001	0.0000
NBP[1]736*	0.0001	0.0000	0.0009	0.0000	0.0000	0.0000
NBP[1]762*	0.0001	0.0000	0.0005	0.0000	0.0000	0.0000
NBP[1]788*	0.0000	0.0000	0.0003	0.0000	0.0000	0.0000
NBP[1]825*	0.0000	0.0000	0.0003	0.0000	0.0000	0.0000
NBP[1]873*	0.0000	0.0000	0.0001	0.0000	0.0000	0.0000
NBP[1]926*	0.0000	0.0000	0.0000	0.0000	0.0000	0.0000
NBP[1]978*	0.0000	0.0000	0.0000	0.0000	0.0000	0.0000
NBP[1]1021*	0.0000	0.0000	0.0000	0.0000	0.0000	0.0000
NBP[1]1075*	0.0000	0.0000	0.0000	0.0000	0.0000	0.0000
NBP[1]1123*	0.0000	0.0000	0.0000	0.0000	0.0000	0.0000
NBP[1]1173*	0.0000	0.0000	0.0000	0.0000	0.0000	0.0000
NBP[1]1250*	0.0000	0.0000	0.0000	0.0000	0.0000	0.0000
NBP[1]1339*	0.0000	0.0000	0.0000	0.0000	0.0000	0.0000
NBP[1]1432*	0.0000	0.0000	0.0000	0.0000	0.0000	0.0000
NBP[1]1528*	0.0000	0.0000	0.0000	0.0000	0.0000	0.0000
NBP[1]1637*	0.0007	0.0000	0.0157	0.0001	0.0006	0.0000
NBP[1]1732*	0.0101	0.0000	0.2564	0.0018	0.0101	0.0006
NBP[1]1819*	0.0097	0.0000	0.2590	0.0018	0.0101	0.0006
NBP[1]1913*	0.0112	0.0000	0.3148	0.0022	0.0121	0.0008
Total	262.4735	1.0000	140.6055	1.0000	15.8421	1.0000

Liquid Phase

Phase Fraction 5.911e-002

COMPONENTS	MOLAR FLOW (kgmole/h)	MOLE FRACTION	MASS FLOW (tonne/d)	MASS FRACTION	LIQUID VOLUME FLOW (m3/h)	LIQUID VOLUME FRACTION
Methane	8.4853	0.3660	3.2671	0.0643	0.4547	0.1492
Ethane	2.3279	0.1004	1.6800	0.0330	0.1968	0.0646
Propane	1.9774	0.0853	2.0927	0.0412	0.1721	0.0565
i-Butane	0.3615	0.0156	0.5043	0.0099	0.0374	0.0123
n-Butane	0.8001	0.0345	1.1161	0.0220	0.0797	0.0262
i-Pentane	0.2285	0.0099	0.3957	0.0078	0.0264	0.0087
n-Pentane	0.2846	0.0123	0.4928	0.0097	0.0326	0.0107
n-Hexane	0.5998	0.0259	1.2406	0.0244	0.0780	0.0256
Nitrogen	0.1459	0.0063	0.0981	0.0019	0.0051	0.0017
CO2	0.6778	0.0292	0.7159	0.0141	0.0361	0.0119
H2S	0.0001	0.0000	0.0001	0.0000	0.0000	0.0000
H2O	0.0217	0.0009	0.0094	0.0002	0.0004	0.0001
NBP[1]95*	0.0856	0.0037	0.1396	0.0027	0.0086	0.0028
NBP[1]121*	0.1157	0.0050	0.2023	0.0040	0.0122	0.0040
NBP[1]147*	0.1698	0.0073	0.3267	0.0064	0.0194	0.0064
NBP[1]171*	0.3662	0.0158	0.7705	0.0152	0.0451	0.0148
NBP[1]195*	0.5360	0.0231	1.2038	0.0237	0.0697	0.0229
NBP[1]222*	0.4494	0.0194	1.0854	0.0214	0.0620	0.0204
NBP[1]248*	0.4137	0.0178	1.0745	0.0211	0.0607	0.0199
NBP[1]273*	0.3640	0.0157	1.0108	0.0199	0.0564	0.0185
NBP[1]299*	0.3070	0.0132	0.9090	0.0179	0.0502	0.0165
NBP[1]325*	0.2375	0.0102	0.7471	0.0147	0.0408	0.0134
NBP[1]351*	0.2036	0.0088	0.6809	0.0134	0.0369	0.0121
NBP[1]377*	0.1952	0.0084	0.6960	0.0137	0.0373	0.0122
NBP[1]402*	0.1855	0.0080	0.7056	0.0139	0.0374	0.0123
NBP[1]428*	0.1815	0.0078	0.7366	0.0145	0.0387	0.0127
NBP[1]454*	0.1850	0.0080	0.8022	0.0158	0.0417	0.0137
NBP[1]480*	0.1905	0.0082	0.8826	0.0174	0.0454	0.0149
NBP[1]505*	0.1867	0.0081	0.9224	0.0181	0.0470	0.0154

* Specified by user.

Material Stream: 6 (continued)

Fluid Package: Basis-1
Property Package: Peng-Robinson

COMPOSITION

Liquid Phase (continued)

Phase Fraction 5.911e-002

COMPONENTS	MOLAR FLOW (kgmole/h)	MOLE FRACTION	MASS FLOW (tonne/d)	MASS FRACTION	LIQUID VOLUME FLOW (m3/h)	LIQUID VOLUME FRACTION
NBP[1]531*	0.1817	0.0078	0.9555	0.0188	0.0483	0.0158
NBP[1]557*	0.1761	0.0076	0.9849	0.0194	0.0494	0.0162
NBP[1]582*	0.1691	0.0073	1.0043	0.0198	0.0499	0.0164
NBP[1]608*	0.1633	0.0070	1.0291	0.0202	0.0507	0.0166
NBP[1]634*	0.1605	0.0069	1.0712	0.0211	0.0524	0.0172
NBP[1]659*	0.1582	0.0068	1.1167	0.0220	0.0541	0.0178
NBP[1]685*	0.1639	0.0071	1.2208	0.0240	0.0587	0.0193
NBP[1]711*	0.1714	0.0074	1.3432	0.0264	0.0641	0.0210
NBP[1]736*	0.1696	0.0073	1.3907	0.0274	0.0659	0.0216
NBP[1]762*	0.1652	0.0071	1.4209	0.0279	0.0668	0.0219
NBP[1]788*	0.1584	0.0068	1.4420	0.0284	0.0674	0.0221
NBP[1]825*	0.2654	0.0114	2.5960	0.0511	0.1201	0.0394
NBP[1]873*	0.1830	0.0079	1.9403	0.0382	0.0887	0.0291
NBP[1]926*	0.1437	0.0062	1.6471	0.0324	0.0744	0.0244
NBP[1]978*	0.1474	0.0064	1.8524	0.0364	0.0825	0.0271
NBP[1]1021*	0.0728	0.0031	0.9655	0.0190	0.0426	0.0140
NBP[1]1075*	0.0449	0.0019	0.6310	0.0124	0.0276	0.0091
NBP[1]1123*	0.0417	0.0018	0.6267	0.0123	0.0271	0.0089
NBP[1]1173*	0.0300	0.0013	0.4772	0.0094	0.0205	0.0067
NBP[1]1250*	0.0393	0.0017	0.6767	0.0133	0.0287	0.0094
NBP[1]1339*	0.0364	0.0016	0.6999	0.0138	0.0291	0.0096
NBP[1]1432*	0.0257	0.0011	0.5397	0.0106	0.0221	0.0073
NBP[1]1528*	0.0180	0.0008	0.4082	0.0080	0.0165	0.0054
NBP[1]1637*	0.0120	0.0005	0.2890	0.0057	0.0116	0.0038
NBP[1]1732*	0.0000	0.0000	0.0001	0.0000	0.0000	0.0000
NBP[1]1819*	0.0000	0.0000	0.0000	0.0000	0.0000	0.0000
NBP[1]1913*	0.0000	0.0000	0.0000	0.0000	0.0000	0.0000
Total	23.1813	1.0000	50.8377	1.0000	3.0483	1.0000

Aqueous Phase

Phase Fraction 0.2716

COMPONENTS	MOLAR FLOW (kgmole/h)	MOLE FRACTION	MASS FLOW (tonne/d)	MASS FRACTION	LIQUID VOLUME FLOW (m3/h)	LIQUID VOLUME FRACTION
Methane	0.0001	0.0000	0.0000	0.0000	0.0000	0.0000
Ethane	0.0000	0.0000	0.0000	0.0000	0.0000	0.0000
Propane	0.0000	0.0000	0.0000	0.0000	0.0000	0.0000
i-Butane	0.0000	0.0000	0.0000	0.0000	0.0000	0.0000
n-Butane	0.0000	0.0000	0.0000	0.0000	0.0000	0.0000
i-Pentane	0.0000	0.0000	0.0000	0.0000	0.0000	0.0000
n-Pentane	0.0000	0.0000	0.0000	0.0000	0.0000	0.0000
n-Hexane	0.0000	0.0000	0.0000	0.0000	0.0000	0.0000
Nitrogen	0.0035	0.0000	0.0024	0.0001	0.0001	0.0001
CO2	0.0881	0.0008	0.0931	0.0020	0.0047	0.0024
H2S	0.0000	0.0000	0.0000	0.0000	0.0000	0.0000
H2O	106.4157	0.9991	46.0102	0.9979	1.9210	0.9975
NBP[1]95*	0.0000	0.0000	0.0000	0.0000	0.0000	0.0000
NBP[1]121*	0.0000	0.0000	0.0000	0.0000	0.0000	0.0000
NBP[1]147*	0.0000	0.0000	0.0000	0.0000	0.0000	0.0000
NBP[1]171*	0.0000	0.0000	0.0000	0.0000	0.0000	0.0000
NBP[1]195*	0.0000	0.0000	0.0000	0.0000	0.0000	0.0000
NBP[1]222*	0.0000	0.0000	0.0000	0.0000	0.0000	0.0000
NBP[1]248*	0.0000	0.0000	0.0000	0.0000	0.0000	0.0000
NBP[1]273*	0.0000	0.0000	0.0000	0.0000	0.0000	0.0000
NBP[1]299*	0.0000	0.0000	0.0000	0.0000	0.0000	0.0000
NBP[1]325*	0.0000	0.0000	0.0000	0.0000	0.0000	0.0000

* Specified by user.

Material Stream: 6 (continued)

Fluid Package: Basis-1
Property Package: Peng-Robinson

COMPOSITION

Aqueous Phase (continued)

Phase Fraction 0.2716

COMPONENTS	MOLAR FLOW (kgmole/h)	MOLE FRACTION	MASS FLOW (tonne/d)	MASS FRACTION	LIQUID VOLUME FLOW (m3/h)	LIQUID VOLUME FRACTION
NBP[1]351*	0.0000	0.0000	0.0000	0.0000	0.0000	0.0000
NBP[1]377*	0.0000	0.0000	0.0000	0.0000	0.0000	0.0000
NBP[1]402*	0.0000	0.0000	0.0000	0.0000	0.0000	0.0000
NBP[1]428*	0.0000	0.0000	0.0000	0.0000	0.0000	0.0000
NBP[1]454*	0.0000	0.0000	0.0000	0.0000	0.0000	0.0000
NBP[1]480*	0.0000	0.0000	0.0000	0.0000	0.0000	0.0000
NBP[1]505*	0.0000	0.0000	0.0000	0.0000	0.0000	0.0000
NBP[1]531*	0.0000	0.0000	0.0000	0.0000	0.0000	0.0000
NBP[1]557*	0.0000	0.0000	0.0000	0.0000	0.0000	0.0000
NBP[1]582*	0.0000	0.0000	0.0000	0.0000	0.0000	0.0000
NBP[1]608*	0.0000	0.0000	0.0000	0.0000	0.0000	0.0000
NBP[1]634*	0.0000	0.0000	0.0000	0.0000	0.0000	0.0000
NBP[1]659*	0.0000	0.0000	0.0000	0.0000	0.0000	0.0000
NBP[1]685*	0.0000	0.0000	0.0000	0.0000	0.0000	0.0000
NBP[1]711*	0.0000	0.0000	0.0000	0.0000	0.0000	0.0000
NBP[1]736*	0.0000	0.0000	0.0000	0.0000	0.0000	0.0000
NBP[1]762*	0.0000	0.0000	0.0000	0.0000	0.0000	0.0000
NBP[1]788*	0.0000	0.0000	0.0000	0.0000	0.0000	0.0000
NBP[1]825*	0.0000	0.0000	0.0000	0.0000	0.0000	0.0000
NBP[1]873*	0.0000	0.0000	0.0000	0.0000	0.0000	0.0000
NBP[1]926*	0.0000	0.0000	0.0000	0.0000	0.0000	0.0000
NBP[1]978*	0.0000	0.0000	0.0000	0.0000	0.0000	0.0000
NBP[1]1021*	0.0000	0.0000	0.0000	0.0000	0.0000	0.0000
NBP[1]1075*	0.0000	0.0000	0.0000	0.0000	0.0000	0.0000
NBP[1]1123*	0.0000	0.0000	0.0000	0.0000	0.0000	0.0000
NBP[1]1173*	0.0000	0.0000	0.0000	0.0000	0.0000	0.0000
NBP[1]1250*	0.0000	0.0000	0.0000	0.0000	0.0000	0.0000
NBP[1]1339*	0.0000	0.0000	0.0000	0.0000	0.0000	0.0000
NBP[1]1432*	0.0000	0.0000	0.0000	0.0000	0.0000	0.0000
NBP[1]1528*	0.0000	0.0000	0.0000	0.0000	0.0000	0.0000
NBP[1]1637*	0.0000	0.0000	0.0000	0.0000	0.0000	0.0000
NBP[1]1732*	0.0000	0.0000	0.0000	0.0000	0.0000	0.0000
NBP[1]1819*	0.0000	0.0000	0.0000	0.0000	0.0000	0.0000
NBP[1]1913*	0.0000	0.0000	0.0000	0.0000	0.0000	0.0000
Total	106.5074	1.0000	46.1056	1.0000	1.9258	1.0000

Material Stream: 7

Fluid Package: Basis-1
Property Package: Peng-Robinson

CONDITIONS

		Overall	Vapour Phase	Liquid Phase	Aqueous Phase
Vapour / Phase Fraction		0.6587	0.6587	0.0696	0.2718
Temperature:	(F)	83.74	83.74	83.74	83.74
Pressure:	(psig)	1142 *	1142	1142	1142
Molar Flow	(MMSCFD)	7.874	5.186	0.5477	2.140
Mass Flow	(tonne/d)	237.5	131.6	59.84	46.13
Std Ideal Liq Vol Flow	(barrel/day)	3142	2308	543.9	290.9
Molar Enthalpy	(kJ/kgmole)	-1.527e+005	-9.022e+004	-2.237e+005	-2.859e+005
Molar Entropy	(kJ/kgmole-C)	125.5	148.2	186.9	54.65
Heat Flow	(MMBtu/hr)	-56.75	-22.09	-5.784	-28.88
Liq Vol Flow @Std Cond	(barrel/day)	2.954e+005 *	9.183e+005	520.8	285.8

* Specified by user.

Material Stream: 7 (continued)

Fluid Package: Basis-1
Property Package: Peng-Robinson

PROPERTIES

	Overall	Vapour Phase	Liquid Phase	Aqueous Phase
Molecular Weight	25.24	21.23	91.39	18.04
Molar Density (kgmole/m3)	5.810	4.162	7.749	55.85
Mass Density (kg/m3)	146.6	88.34	708.1	1007
Act. Volume Flow (barrel/day)	1.019e+004	9369	531.5	288.1
Mass Enthalpy (kJ/kg)	-6049	-4250	-2448	-1.585e+004
Mass Entropy (kJ/kg-C)	4.971	6.983	2.045	3.030
Heat Capacity (kJ/kgmole-C)	73.60	59.58	191.0	77.55
Mass Heat Capacity (kJ/kg-C)	2.916	2.807	2.090	4.300
LHV Molar Basis (Std) (Btu/SCF)	---	---	---	3.663e-004
LHV Mass Basis (Std) (kJ/kg)	---	---	---	1.793e-002
Phase Fraction [Vol. Basis]	0.7343	0.7343	0.1731	9.256e-002
Phase Fraction [Mass Basis]	0.5539	0.5539	0.2519	0.1942
Partial Pressure of CO2 (psig)	23.99	---	---	---
Cost Based on Flow (Cost/s)	0.0000	0.0000	0.0000	0.0000
Act. Gas Flow (ACT_m3/h)	62.06	62.06	---	---
Avg. Liq. Density (kgmole/m3)	18.84	16.90	7.571	55.31
Specific Heat (kJ/kgmole-C)	73.60	59.58	191.0	77.55
Std. Gas Flow (STD_m3/h)	9272	6107	645.1	2520
Std. Ideal Liq. Mass Density (kg/m3)	475.5	358.7	691.9	997.6
Act. Liq. Flow (barrel/day)	819.6	---	531.5	288.1
Z Factor	---	0.7631	0.4099	5.687e-002
Watson K	15.58	17.30	12.30	8.487
User Property	---	---	---	---
Partial Pressure of H2S (psig)	-14.69	---	---	---
Cp/(Cp - R)	1.127	1.162	1.046	1.120
Cp/Cv	1.299	1.718	1.295	1.148
Heat of Vap. (kJ/kgmole)	4.656e+004	---	---	---
Kinematic Viscosity (cSt)	---	0.1610	2.310	0.8134
Liq. Mass Density (Std. Cond) (kg/m3)	5.058	0.9012	722.6	1015
Liq. Vol. Flow (Std. Cond) (barrel/day)	2.954e+005	9.183e+005	520.8	285.8
Liquid Fraction	0.3413	0.0000	1.000	1.000
Molar Volume (m3/kgmole)	0.1721	0.2403	0.1291	1.791e-002
Mass Heat of Vap. (kJ/kg)	1845	---	---	---
Phase Fraction [Molar Basis]	0.6587	0.6587	0.0696	0.2718
Surface Tension (dyne/cm)	---	---	11.07	71.40
Thermal Conductivity (W/m-K)	---	3.962e-002	9.033e-002	0.6165
Viscosity (cP)	---	1.422e-002	1.636	0.8192
Cv (Semi-Ideal) (kJ/kgmole-C)	65.29	51.27	182.6	69.23
Mass Cv (Semi-Ideal) (kJ/kg-C)	2.587	2.415	1.999	3.839
Cv (kJ/kgmole-C)	56.67	34.69	147.4	67.53
Mass Cv (kJ/kg-C)	2.245	1.634	1.613	3.744
Cv (Ent. Method) (kJ/kgmole-C)	---	---	155.6	66.42
Mass Cv (Ent. Method) (kJ/kg-C)	---	---	1.703	3.683
Cp/Cv (Ent. Method)	---	---	1.227	1.167
Reid VP at 37.8 C (psig)	3319	---	273.7	---
True VP at 37.8 C (psig)	6318	---	1221	71.73
Liq. Vol. Flow - Sum(Std. Cond) (barrel/day)	9.191e+005	9.183e+005	520.8	285.8
HHV Molar Basis (Std) (Btu/SCF)	---	---	---	46.43
HHV Mass Basis (Std) (kJ/kg)	---	---	---	2272
CO2 Loading	---	---	---	---
CO2 App ML Con (kgmole/m3)	---	---	0.1962	4.262e-002
CO2 App WT Con (kgmol/kg)	---	---	2.771e-004	4.232e-005
Phase Fraction [Act. Vol. Basis]	0.9196	0.9196	5.217e-002	2.828e-002
Mass Exergy (kJ/kg)	286.6	---	---	---
Viscosity Index	-25.54	---	---	---
Ideal Gas Cp/Cv	1.217	1.251	1.060	1.329
Ideal Gas Cp (kJ/kgmole-C)	46.67	41.49	146.8	33.60

* Specified by user.

Material Stream: 7 (continued)

Fluid Package: Basis-1
Property Package: Peng-Robinson

PROPERTIES

	Overall	Vapour Phase	Liquid Phase	Aqueous Phase
Mass Ideal Gas Cp (kJ/kg-C)	1.849	1.955	1.606	1.863
Bubble Point Pressure (psig)	6295	---	---	---

COMPOSITION

Overall Phase

Vapour Fraction 0.6587

COMPONENTS	MOLAR FLOW (kgmole/h)	MOLE FRACTION	MASS FLOW (tonne/d)	MASS FRACTION	LIQUID VOLUME FLOW (m3/h)	LIQUID VOLUME FRACTION
Methane	207.0440	0.5280	79.7181	0.3356	11.0944	0.5330
Ethane	28.8006	0.0734	20.7848	0.0875	2.4348	0.1170
Propane	15.2677	0.0389	16.1583	0.0680	1.3288	0.0638
i-Butane	2.0287	0.0052	2.8300	0.0119	0.2098	0.0101
n-Butane	3.9513	0.0101	5.5120	0.0232	0.3938	0.0189
i-Pentane	0.8495	0.0022	1.4710	0.0062	0.0983	0.0047
n-Pentane	0.9602	0.0024	1.6627	0.0070	0.1100	0.0053
n-Hexane	1.4698	0.0037	3.0399	0.0128	0.1911	0.0092
Nitrogen	5.5989	0.0143	3.7642	0.0158	0.1945	0.0093
CO2	9.4151	0.0240	9.9445	0.0419	0.5020	0.0241
H2S	0.0006	0.0000	0.0005	0.0000	0.0000	0.0000
H2O	106.6990	0.2721	46.1326	0.1942	1.9261	0.0925
NBP[1]95*	0.2883	0.0007	0.4699	0.0020	0.0288	0.0014
NBP[1]121*	0.3381	0.0009	0.5912	0.0025	0.0358	0.0017
NBP[1]147*	0.4314	0.0011	0.8304	0.0035	0.0494	0.0024
NBP[1]171*	0.8224	0.0021	1.7306	0.0073	0.1013	0.0049
NBP[1]195*	1.0758	0.0027	2.4160	0.0102	0.1398	0.0067
NBP[1]222*	0.8003	0.0020	1.9331	0.0081	0.1105	0.0053
NBP[1]248*	0.6657	0.0017	1.7287	0.0073	0.0976	0.0047
NBP[1]273*	0.5358	0.0014	1.4881	0.0063	0.0831	0.0040
NBP[1]299*	0.4185	0.0011	1.2393	0.0052	0.0684	0.0033
NBP[1]325*	0.3029	0.0008	0.9528	0.0040	0.0521	0.0025
NBP[1]351*	0.2456	0.0006	0.8214	0.0035	0.0445	0.0021
NBP[1]377*	0.2247	0.0006	0.8014	0.0034	0.0429	0.0021
NBP[1]402*	0.2061	0.0005	0.7838	0.0033	0.0416	0.0020
NBP[1]428*	0.1961	0.0005	0.7956	0.0033	0.0418	0.0020
NBP[1]454*	0.1956	0.0005	0.8480	0.0036	0.0441	0.0021
NBP[1]480*	0.1982	0.0005	0.9182	0.0039	0.0473	0.0023
NBP[1]505*	0.1920	0.0005	0.9484	0.0040	0.0484	0.0023
NBP[1]531*	0.1852	0.0005	0.9740	0.0041	0.0492	0.0024
NBP[1]557*	0.1784	0.0005	0.9978	0.0042	0.0500	0.0024
NBP[1]582*	0.1706	0.0004	1.0132	0.0043	0.0503	0.0024
NBP[1]608*	0.1643	0.0004	1.0351	0.0044	0.0510	0.0025
NBP[1]634*	0.1611	0.0004	1.0753	0.0045	0.0526	0.0025
NBP[1]659*	0.1586	0.0004	1.1194	0.0047	0.0543	0.0026
NBP[1]685*	0.1641	0.0004	1.2227	0.0051	0.0588	0.0028
NBP[1]711*	0.1715	0.0004	1.3445	0.0057	0.0642	0.0031
NBP[1]736*	0.1697	0.0004	1.3915	0.0059	0.0659	0.0032
NBP[1]762*	0.1653	0.0004	1.4214	0.0060	0.0669	0.0032
NBP[1]788*	0.1585	0.0004	1.4424	0.0061	0.0674	0.0032
NBP[1]825*	0.2655	0.0007	2.5963	0.0109	0.1201	0.0058
NBP[1]873*	0.1830	0.0005	1.9404	0.0082	0.0887	0.0043
NBP[1]926*	0.1437	0.0004	1.6472	0.0069	0.0744	0.0036
NBP[1]978*	0.1474	0.0004	1.8524	0.0078	0.0825	0.0040
NBP[1]1021*	0.0728	0.0002	0.9655	0.0041	0.0426	0.0020
NBP[1]1075*	0.0449	0.0001	0.6310	0.0027	0.0276	0.0013
NBP[1]1123*	0.0417	0.0001	0.6267	0.0026	0.0271	0.0013
NBP[1]1173*	0.0300	0.0001	0.4772	0.0020	0.0205	0.0010
NBP[1]1250*	0.0393	0.0001	0.6767	0.0028	0.0287	0.0014

* Specified by user.

Material Stream: 7 (continued)

Fluid Package: Basis-1
Property Package: Peng-Robinson

COMPOSITION

Overall Phase (continued)

Vapour Fraction 0.6587

COMPONENTS	MOLAR FLOW (kgmole/h)	MOLE FRACTION	MASS FLOW (tonne/d)	MASS FRACTION	LIQUID VOLUME FLOW (m3/h)	LIQUID VOLUME FRACTION
NBP[1]1339*	0.0364	0.0001	0.6999	0.0029	0.0291	0.0014
NBP[1]1432*	0.0257	0.0001	0.5397	0.0023	0.0221	0.0011
NBP[1]1528*	0.0180	0.0000	0.4082	0.0017	0.0165	0.0008
NBP[1]1637*	0.0127	0.0000	0.3047	0.0013	0.0122	0.0006
NBP[1]1732*	0.0101	0.0000	0.2565	0.0011	0.0101	0.0005
NBP[1]1819*	0.0097	0.0000	0.2590	0.0011	0.0101	0.0005
NBP[1]1913*	0.0112	0.0000	0.3148	0.0013	0.0121	0.0006
Total	392.1623	1.0000	237.5489	1.0000	20.8162	1.0000

Vapour Phase

Phase Fraction 0.6587

COMPONENTS	MOLAR FLOW (kgmole/h)	MOLE FRACTION	MASS FLOW (tonne/d)	MASS FRACTION	LIQUID VOLUME FLOW (m3/h)	LIQUID VOLUME FRACTION
Methane	199.9149	0.7740	76.9732	0.5850	10.7124	0.7008
Ethane	25.9268	0.1004	18.7108	0.1422	2.1919	0.1434
Propane	12.1437	0.0470	12.8521	0.0977	1.0569	0.0691
i-Butane	1.3760	0.0053	1.9195	0.0146	0.1423	0.0093
n-Butane	2.4696	0.0096	3.4451	0.0262	0.2461	0.0161
i-Pentane	0.4045	0.0016	0.7005	0.0053	0.0468	0.0031
n-Pentane	0.4094	0.0016	0.7090	0.0054	0.0469	0.0031
n-Hexane	0.3725	0.0014	0.7705	0.0059	0.0484	0.0032
Nitrogen	5.5015	0.0213	3.6987	0.0281	0.1911	0.0125
CO2	8.6429	0.0335	9.1290	0.0694	0.4609	0.0301
H2S	0.0005	0.0000	0.0004	0.0000	0.0000	0.0000
H2O	0.1864	0.0007	0.0806	0.0006	0.0034	0.0002
NBP[1]95*	0.1243	0.0005	0.2026	0.0015	0.0124	0.0008
NBP[1]121*	0.1193	0.0005	0.2086	0.0016	0.0126	0.0008
NBP[1]147*	0.1201	0.0005	0.2311	0.0018	0.0137	0.0009
NBP[1]171*	0.1782	0.0007	0.3750	0.0029	0.0220	0.0014
NBP[1]195*	0.1775	0.0007	0.3987	0.0030	0.0231	0.0015
NBP[1]222*	0.0932	0.0004	0.2250	0.0017	0.0129	0.0008
NBP[1]248*	0.0542	0.0002	0.1408	0.0011	0.0080	0.0005
NBP[1]273*	0.0299	0.0001	0.0831	0.0006	0.0046	0.0003
NBP[1]299*	0.0157	0.0001	0.0465	0.0004	0.0026	0.0002
NBP[1]325*	0.0074	0.0000	0.0233	0.0002	0.0013	0.0001
NBP[1]351*	0.0038	0.0000	0.0128	0.0001	0.0007	0.0000
NBP[1]377*	0.0022	0.0000	0.0077	0.0001	0.0004	0.0000
NBP[1]402*	0.0012	0.0000	0.0046	0.0000	0.0002	0.0000
NBP[1]428*	0.0007	0.0000	0.0028	0.0000	0.0001	0.0000
NBP[1]454*	0.0004	0.0000	0.0018	0.0000	0.0001	0.0000
NBP[1]480*	0.0002	0.0000	0.0011	0.0000	0.0001	0.0000
NBP[1]505*	0.0001	0.0000	0.0006	0.0000	0.0000	0.0000
NBP[1]531*	0.0001	0.0000	0.0004	0.0000	0.0000	0.0000
NBP[1]557*	0.0000	0.0000	0.0002	0.0000	0.0000	0.0000
NBP[1]582*	0.0000	0.0000	0.0001	0.0000	0.0000	0.0000
NBP[1]608*	0.0000	0.0000	0.0001	0.0000	0.0000	0.0000
NBP[1]634*	0.0000	0.0000	0.0000	0.0000	0.0000	0.0000
NBP[1]659*	0.0000	0.0000	0.0000	0.0000	0.0000	0.0000
NBP[1]685*	0.0000	0.0000	0.0000	0.0000	0.0000	0.0000
NBP[1]711*	0.0000	0.0000	0.0000	0.0000	0.0000	0.0000
NBP[1]736*	0.0000	0.0000	0.0000	0.0000	0.0000	0.0000
NBP[1]762*	0.0000	0.0000	0.0000	0.0000	0.0000	0.0000
NBP[1]788*	0.0000	0.0000	0.0000	0.0000	0.0000	0.0000
NBP[1]825*	0.0000	0.0000	0.0000	0.0000	0.0000	0.0000
NBP[1]873*	0.0000	0.0000	0.0000	0.0000	0.0000	0.0000

* Specified by user.

Material Stream: 7 (continued)

Fluid Package: Basis-1
Property Package: Peng-Robinson

COMPOSITION

Vapour Phase (continued)

Phase Fraction 0.6587

COMPONENTS	MOLAR FLOW (kgmole/h)	MOLE FRACTION	MASS FLOW (tonne/d)	MASS FRACTION	LIQUID VOLUME FLOW (m3/h)	LIQUID VOLUME FRACTION
NBP[1]926*	0.0000	0.0000	0.0000	0.0000	0.0000	0.0000
NBP[1]978*	0.0000	0.0000	0.0000	0.0000	0.0000	0.0000
NBP[1]1021*	0.0000	0.0000	0.0000	0.0000	0.0000	0.0000
NBP[1]1075*	0.0000	0.0000	0.0000	0.0000	0.0000	0.0000
NBP[1]1123*	0.0000	0.0000	0.0000	0.0000	0.0000	0.0000
NBP[1]1173*	0.0000	0.0000	0.0000	0.0000	0.0000	0.0000
NBP[1]1250*	0.0000	0.0000	0.0000	0.0000	0.0000	0.0000
NBP[1]1339*	0.0000	0.0000	0.0000	0.0000	0.0000	0.0000
NBP[1]1432*	0.0000	0.0000	0.0000	0.0000	0.0000	0.0000
NBP[1]1528*	0.0000	0.0000	0.0000	0.0000	0.0000	0.0000
NBP[1]1637*	0.0000	0.0000	0.0000	0.0000	0.0000	0.0000
NBP[1]1732*	0.0019	0.0000	0.0489	0.0004	0.0019	0.0001
NBP[1]1819*	0.0097	0.0000	0.2590	0.0020	0.0101	0.0007
NBP[1]1913*	0.0112	0.0000	0.3148	0.0024	0.0121	0.0008
Total	258.3003	1.0000	131.5786	1.0000	15.2861	1.0000

Liquid Phase

Phase Fraction 6.957e-002

COMPONENTS	MOLAR FLOW (kgmole/h)	MOLE FRACTION	MASS FLOW (tonne/d)	MASS FRACTION	LIQUID VOLUME FLOW (m3/h)	LIQUID VOLUME FRACTION
Methane	7.1291	0.2613	2.7449	0.0459	0.3820	0.1060
Ethane	2.8738	0.1053	2.0740	0.0347	0.2430	0.0674
Propane	3.1240	0.1145	3.3062	0.0553	0.2719	0.0755
i-Butane	0.6527	0.0239	0.9105	0.0152	0.0675	0.0187
n-Butane	1.4817	0.0543	2.0669	0.0345	0.1477	0.0410
i-Pentane	0.4450	0.0163	0.7705	0.0129	0.0515	0.0143
n-Pentane	0.5508	0.0202	0.9538	0.0159	0.0631	0.0175
n-Hexane	1.0973	0.0402	2.2695	0.0379	0.1427	0.0396
Nitrogen	0.0952	0.0035	0.0640	0.0011	0.0033	0.0009
CO2	0.6908	0.0253	0.7296	0.0122	0.0368	0.0102
H2S	0.0001	0.0000	0.0001	0.0000	0.0000	0.0000
H2O	0.0158	0.0006	0.0068	0.0001	0.0003	0.0001
NBP[1]95*	0.1640	0.0060	0.2673	0.0045	0.0164	0.0045
NBP[1]121*	0.2188	0.0080	0.3826	0.0064	0.0231	0.0064
NBP[1]147*	0.3114	0.0114	0.5993	0.0100	0.0356	0.0099
NBP[1]171*	0.6442	0.0236	1.3556	0.0227	0.0793	0.0220
NBP[1]195*	0.8983	0.0329	2.0173	0.0337	0.1167	0.0324
NBP[1]222*	0.7072	0.0259	1.7081	0.0285	0.0976	0.0271
NBP[1]248*	0.6114	0.0224	1.5879	0.0265	0.0897	0.0249
NBP[1]273*	0.5059	0.0185	1.4050	0.0235	0.0784	0.0218
NBP[1]299*	0.4028	0.0148	1.1928	0.0199	0.0659	0.0183
NBP[1]325*	0.2955	0.0108	0.9295	0.0155	0.0508	0.0141
NBP[1]351*	0.2418	0.0089	0.8086	0.0135	0.0438	0.0121
NBP[1]377*	0.2226	0.0082	0.7937	0.0133	0.0425	0.0118
NBP[1]402*	0.2049	0.0075	0.7792	0.0130	0.0413	0.0115
NBP[1]428*	0.1954	0.0072	0.7928	0.0132	0.0416	0.0116
NBP[1]454*	0.1952	0.0072	0.8463	0.0141	0.0440	0.0122
NBP[1]480*	0.1979	0.0073	0.9171	0.0153	0.0472	0.0131
NBP[1]505*	0.1919	0.0070	0.9477	0.0158	0.0483	0.0134
NBP[1]531*	0.1852	0.0068	0.9736	0.0163	0.0492	0.0137
NBP[1]557*	0.1784	0.0065	0.9976	0.0167	0.0500	0.0139
NBP[1]582*	0.1706	0.0063	1.0131	0.0169	0.0503	0.0140
NBP[1]608*	0.1643	0.0060	1.0350	0.0173	0.0510	0.0142
NBP[1]634*	0.1611	0.0059	1.0753	0.0180	0.0526	0.0146
NBP[1]659*	0.1586	0.0058	1.1194	0.0187	0.0543	0.0151

* Specified by user.

Material Stream: 7 (continued)

Fluid Package: Basis-1
Property Package: Peng-Robinson

COMPOSITION

Liquid Phase (continued)

Phase Fraction 6.957e-002

COMPONENTS	MOLAR FLOW (kgmole/h)	MOLE FRACTION	MASS FLOW (tonne/d)	MASS FRACTION	LIQUID VOLUME FLOW (m3/h)	LIQUID VOLUME FRACTION
NBP[1]685*	0.1641	0.0060	1.2227	0.0204	0.0588	0.0163
NBP[1]711*	0.1715	0.0063	1.3445	0.0225	0.0642	0.0178
NBP[1]736*	0.1697	0.0062	1.3915	0.0233	0.0659	0.0183
NBP[1]762*	0.1653	0.0061	1.4214	0.0238	0.0669	0.0186
NBP[1]788*	0.1585	0.0058	1.4424	0.0241	0.0674	0.0187
NBP[1]825*	0.2655	0.0097	2.5963	0.0434	0.1201	0.0333
NBP[1]873*	0.1830	0.0067	1.9404	0.0324	0.0887	0.0246
NBP[1]926*	0.1437	0.0053	1.6472	0.0275	0.0744	0.0207
NBP[1]978*	0.1474	0.0054	1.8524	0.0310	0.0825	0.0229
NBP[1]1021*	0.0728	0.0027	0.9655	0.0161	0.0426	0.0118
NBP[1]1075*	0.0449	0.0016	0.6310	0.0105	0.0276	0.0077
NBP[1]1123*	0.0417	0.0015	0.6267	0.0105	0.0271	0.0075
NBP[1]1173*	0.0300	0.0011	0.4772	0.0080	0.0205	0.0057
NBP[1]1250*	0.0393	0.0014	0.6767	0.0113	0.0287	0.0080
NBP[1]1339*	0.0364	0.0013	0.6999	0.0117	0.0291	0.0081
NBP[1]1432*	0.0257	0.0009	0.5397	0.0090	0.0221	0.0061
NBP[1]1528*	0.0180	0.0007	0.4082	0.0068	0.0165	0.0046
NBP[1]1637*	0.0127	0.0005	0.3047	0.0051	0.0122	0.0034
NBP[1]1732*	0.0082	0.0003	0.2076	0.0035	0.0082	0.0023
NBP[1]1819*	0.0000	0.0000	0.0000	0.0000	0.0000	0.0000
NBP[1]1913*	0.0000	0.0000	0.0000	0.0000	0.0000	0.0000
Total	27.2817	1.0000	59.8377	1.0000	3.6033	1.0000

Aqueous Phase

Phase Fraction 0.2718

COMPONENTS	MOLAR FLOW (kgmole/h)	MOLE FRACTION	MASS FLOW (tonne/d)	MASS FRACTION	LIQUID VOLUME FLOW (m3/h)	LIQUID VOLUME FRACTION
Methane	0.0000	0.0000	0.0000	0.0000	0.0000	0.0000
Ethane	0.0000	0.0000	0.0000	0.0000	0.0000	0.0000
Propane	0.0000	0.0000	0.0000	0.0000	0.0000	0.0000
i-Butane	0.0000	0.0000	0.0000	0.0000	0.0000	0.0000
n-Butane	0.0000	0.0000	0.0000	0.0000	0.0000	0.0000
i-Pentane	0.0000	0.0000	0.0000	0.0000	0.0000	0.0000
n-Pentane	0.0000	0.0000	0.0000	0.0000	0.0000	0.0000
n-Hexane	0.0000	0.0000	0.0000	0.0000	0.0000	0.0000
Nitrogen	0.0022	0.0000	0.0015	0.0000	0.0001	0.0000
CO2	0.0813	0.0008	0.0859	0.0019	0.0043	0.0023
H2S	0.0000	0.0000	0.0000	0.0000	0.0000	0.0000
H2O	106.4967	0.9992	46.0452	0.9981	1.9224	0.9977
NBP[1]95*	0.0000	0.0000	0.0000	0.0000	0.0000	0.0000
NBP[1]121*	0.0000	0.0000	0.0000	0.0000	0.0000	0.0000
NBP[1]147*	0.0000	0.0000	0.0000	0.0000	0.0000	0.0000
NBP[1]171*	0.0000	0.0000	0.0000	0.0000	0.0000	0.0000
NBP[1]195*	0.0000	0.0000	0.0000	0.0000	0.0000	0.0000
NBP[1]222*	0.0000	0.0000	0.0000	0.0000	0.0000	0.0000
NBP[1]248*	0.0000	0.0000	0.0000	0.0000	0.0000	0.0000
NBP[1]273*	0.0000	0.0000	0.0000	0.0000	0.0000	0.0000
NBP[1]299*	0.0000	0.0000	0.0000	0.0000	0.0000	0.0000
NBP[1]325*	0.0000	0.0000	0.0000	0.0000	0.0000	0.0000
NBP[1]351*	0.0000	0.0000	0.0000	0.0000	0.0000	0.0000
NBP[1]377*	0.0000	0.0000	0.0000	0.0000	0.0000	0.0000
NBP[1]402*	0.0000	0.0000	0.0000	0.0000	0.0000	0.0000
NBP[1]428*	0.0000	0.0000	0.0000	0.0000	0.0000	0.0000
NBP[1]454*	0.0000	0.0000	0.0000	0.0000	0.0000	0.0000
NBP[1]480*	0.0000	0.0000	0.0000	0.0000	0.0000	0.0000

* Specified by user.

Material Stream: 7 (continued)

Fluid Package: Basis-1
Property Package: Peng-Robinson

COMPOSITION

Aqueous Phase (continued)

Phase Fraction 0.2718

COMPONENTS	MOLAR FLOW (kgmole/h)	MOLE FRACTION	MASS FLOW (tonne/d)	MASS FRACTION	LIQUID VOLUME FLOW (m3/h)	LIQUID VOLUME FRACTION
NBP[1]505*	0.0000	0.0000	0.0000	0.0000	0.0000	0.0000
NBP[1]531*	0.0000	0.0000	0.0000	0.0000	0.0000	0.0000
NBP[1]557*	0.0000	0.0000	0.0000	0.0000	0.0000	0.0000
NBP[1]582*	0.0000	0.0000	0.0000	0.0000	0.0000	0.0000
NBP[1]608*	0.0000	0.0000	0.0000	0.0000	0.0000	0.0000
NBP[1]634*	0.0000	0.0000	0.0000	0.0000	0.0000	0.0000
NBP[1]659*	0.0000	0.0000	0.0000	0.0000	0.0000	0.0000
NBP[1]685*	0.0000	0.0000	0.0000	0.0000	0.0000	0.0000
NBP[1]711*	0.0000	0.0000	0.0000	0.0000	0.0000	0.0000
NBP[1]736*	0.0000	0.0000	0.0000	0.0000	0.0000	0.0000
NBP[1]762*	0.0000	0.0000	0.0000	0.0000	0.0000	0.0000
NBP[1]788*	0.0000	0.0000	0.0000	0.0000	0.0000	0.0000
NBP[1]825*	0.0000	0.0000	0.0000	0.0000	0.0000	0.0000
NBP[1]873*	0.0000	0.0000	0.0000	0.0000	0.0000	0.0000
NBP[1]926*	0.0000	0.0000	0.0000	0.0000	0.0000	0.0000
NBP[1]978*	0.0000	0.0000	0.0000	0.0000	0.0000	0.0000
NBP[1]1021*	0.0000	0.0000	0.0000	0.0000	0.0000	0.0000
NBP[1]1075*	0.0000	0.0000	0.0000	0.0000	0.0000	0.0000
NBP[1]1123*	0.0000	0.0000	0.0000	0.0000	0.0000	0.0000
NBP[1]1173*	0.0000	0.0000	0.0000	0.0000	0.0000	0.0000
NBP[1]1250*	0.0000	0.0000	0.0000	0.0000	0.0000	0.0000
NBP[1]1339*	0.0000	0.0000	0.0000	0.0000	0.0000	0.0000
NBP[1]1432*	0.0000	0.0000	0.0000	0.0000	0.0000	0.0000
NBP[1]1528*	0.0000	0.0000	0.0000	0.0000	0.0000	0.0000
NBP[1]1637*	0.0000	0.0000	0.0000	0.0000	0.0000	0.0000
NBP[1]1732*	0.0000	0.0000	0.0000	0.0000	0.0000	0.0000
NBP[1]1819*	0.0000	0.0000	0.0000	0.0000	0.0000	0.0000
NBP[1]1913*	0.0000	0.0000	0.0000	0.0000	0.0000	0.0000
Total	106.5803	1.0000	46.1326	1.0000	1.9268	1.0000

Material Stream: 8

Fluid Package: Basis-1
Property Package: Peng-Robinson

CONDITIONS

		Overall	Vapour Phase	Liquid Phase	Aqueous Phase
Vapour / Phase Fraction		0.6795	0.6795	0.0494	0.2711
Temperature:	(F)	96.33	96.33	96.33	96.33
Pressure:	(psig)	650.0	650.0	650.0	650.0
Molar Flow	(MMSCFD)	7.874	5.350	0.3887	2.135
Mass Flow	(tonne/d)	237.5	137.1	54.50	46.00
Std Ideal Liq Vol Flow	(barrel/day)	3142	2390	462.2	290.0
Molar Enthalpy	(kJ/kgmole)	-1.514e+005	-8.942e+004	-2.695e+005	-2.854e+005
Molar Entropy	(kJ/kgmole-C)	132.2	156.4	215.9	56.44
Heat Flow	(MMBtu/hr)	-56.29	-22.59	-4.946	-28.76
Liq Vol Flow @Std Cond	(barrel/day)	2.954e+005 *	9.473e+005	444.6	285.1

PROPERTIES

		Overall	Vapour Phase	Liquid Phase	Aqueous Phase
Molecular Weight		25.24	21.43	117.3	18.03
Molar Density	(kgmole/m3)	2.935	2.071	6.399	55.51
Mass Density	(kg/m3)	74.09	44.39	750.5	1001
Act. Volume Flow	(barrel/day)	2.017e+004	1.942e+004	456.7	289.1
Mass Enthalpy	(kJ/kg)	-6000	-4173	-2298	-1.583e+004
Mass Entropy	(kJ/kg-C)	5.239	7.297	1.841	3.131

* Specified by user.

Material Stream: 8 (continued)

Fluid Package: Basis-1
Property Package: Peng-Robinson

PROPERTIES

	Overall	Vapour Phase	Liquid Phase	Aqueous Phase
Heat Capacity (kJ/kgmole-C)	67.09	50.24	241.1	77.63
Mass Heat Capacity (kJ/kg-C)	2.658	2.344	2.055	4.306
LHV Molar Basis (Std) (Btu/SCF)	---	---	---	3.322e-004
LHV Mass Basis (Std) (kJ/kg)	---	---	---	1.627e-002
Phase Fraction [Vol. Basis]	0.7606	0.7606	0.1471	9.229e-002
Phase Fraction [Mass Basis]	0.5769	0.5769	0.2294	0.1936
Partial Pressure of CO2 (psig)	7.861	---	---	---
Cost Based on Flow (Cost/s)	0.0000	0.0000	0.0000	0.0000
Act. Gas Flow (ACT_m3/h)	128.7	128.7	---	---
Avg. Liq. Density (kgmole/m3)	18.84	16.83	6.323	55.35
Specific Heat (kJ/kgmole-C)	67.09	50.24	241.1	77.63
Std. Gas Flow (STD_m3/h)	9272	6301	457.8	2514
Std. Ideal Liq. Mass Density (kg/m3)	475.5	360.7	741.6	997.7
Act. Liq. Flow (barrel/day)	745.8	---	456.7	289.1
Z Factor	---	0.8615	0.2789	3.214e-002
Watson K	15.58	17.25	12.04	8.495
User Property	---	---	---	---
Partial Pressure of H2S (psig)	-14.69	---	---	---
Cp/(Cp - R)	1.141	1.198	1.036	1.120
Cp/Cv	1.191	1.449	1.238	1.153
Heat of Vap. (kJ/kgmole)	6.759e+004	---	---	---
Kinematic Viscosity (cSt)	---	0.2840	6.057	0.7074
Liq. Mass Density (Std. Cond) (kg/m3)	5.058	0.9099	771.0	1015
Liq. Vol. Flow (Std. Cond) (barrel/day)	2.954e+005	9.473e+005	444.6	285.1
Liquid Fraction	0.3205	0.0000	1.000	1.000
Molar Volume (m3/kgmole)	0.3407	0.4828	0.1563	1.801e-002
Mass Heat of Vap. (kJ/kg)	2678	---	---	---
Phase Fraction [Molar Basis]	0.6795	0.6795	0.0494	0.2711
Surface Tension (dyne/cm)	---	---	14.18	70.20
Thermal Conductivity (W/m-K)	---	3.536e-002	9.620e-002	0.6260
Viscosity (cP)	---	1.261e-002	4.546	0.7079
Cv (Semi-Ideal) (kJ/kgmole-C)	58.77	41.93	232.8	69.31
Mass Cv (Semi-Ideal) (kJ/kg-C)	2.329	1.956	1.985	3.845
Cv (kJ/kgmole-C)	56.32	34.67	194.7	67.35
Mass Cv (kJ/kg-C)	2.232	1.618	1.660	3.736
Cv (Ent. Method) (kJ/kgmole-C)	---	---	---	66.70
Mass Cv (Ent. Method) (kJ/kg-C)	---	---	---	3.700
Cp/Cv (Ent. Method)	---	---	---	1.164
Reid VP at 37.8 C (psig)	3319	---	135.3	---
True VP at 37.8 C (psig)	6318	3721	659.9	33.47
Liq. Vol. Flow - Sum(Std. Cond) (barrel/day)	9.481e+005	9.473e+005	444.6	285.1
HHV Molar Basis (Std) (Btu/SCF)	---	---	---	46.44
HHV Mass Basis (Std) (kJ/kg)	---	---	---	2274
CO2 Loading	---	---	---	---
CO2 App ML Con (kgmole/m3)	---	---	0.1064	2.606e-002
CO2 App WT Con (kgmol/kg)	---	---	1.418e-004	2.604e-005
Phase Fraction [Act. Vol. Basis]	0.9630	0.9630	2.265e-002	1.434e-002
Mass Exergy (kJ/kg)	256.0	---	---	---
Viscosity Index	-18.35	---	---	---
Ideal Gas Cp/Cv	1.214	1.245	1.046	1.328
Ideal Gas Cp (kJ/kgmole-C)	47.15	42.19	189.7	33.64
Mass Ideal Gas Cp (kJ/kg-C)	1.868	1.969	1.618	1.866
Bubble Point Pressure (psig)	6259	---	---	---

* Specified by user.

Material Stream: 8 (continued)

Fluid Package: Basis-1
Property Package: Peng-Robinson

COMPOSITION

Overall Phase

Vapour Fraction 0.6795

COMPONENTS	MOLAR FLOW (kgmole/h)	MOLE FRACTION	MASS FLOW (tonne/d)	MASS FRACTION	LIQUID VOLUME FLOW (m3/h)	LIQUID VOLUME FRACTION
Methane	207.0440	0.5280	79.7181	0.3356	11.0944	0.5330
Ethane	28.8006	0.0734	20.7848	0.0875	2.4348	0.1170
Propane	15.2677	0.0389	16.1583	0.0680	1.3288	0.0638
i-Butane	2.0287	0.0052	2.8300	0.0119	0.2098	0.0101
n-Butane	3.9513	0.0101	5.5120	0.0232	0.3938	0.0189
i-Pentane	0.8495	0.0022	1.4710	0.0062	0.0983	0.0047
n-Pentane	0.9602	0.0024	1.6627	0.0070	0.1100	0.0053
n-Hexane	1.4698	0.0037	3.0399	0.0128	0.1911	0.0092
Nitrogen	5.5989	0.0143	3.7642	0.0158	0.1945	0.0093
CO2	9.4151	0.0240	9.9445	0.0419	0.5020	0.0241
H2S	0.0006	0.0000	0.0005	0.0000	0.0000	0.0000
H2O	106.6990	0.2721	46.1326	0.1942	1.9261	0.0925
NBP[1]95*	0.2883	0.0007	0.4699	0.0020	0.0288	0.0014
NBP[1]121*	0.3381	0.0009	0.5912	0.0025	0.0358	0.0017
NBP[1]147*	0.4314	0.0011	0.8304	0.0035	0.0494	0.0024
NBP[1]171*	0.8224	0.0021	1.7306	0.0073	0.1013	0.0049
NBP[1]195*	1.0758	0.0027	2.4160	0.0102	0.1398	0.0067
NBP[1]222*	0.8003	0.0020	1.9331	0.0081	0.1105	0.0053
NBP[1]248*	0.6657	0.0017	1.7287	0.0073	0.0976	0.0047
NBP[1]273*	0.5358	0.0014	1.4881	0.0063	0.0831	0.0040
NBP[1]299*	0.4185	0.0011	1.2393	0.0052	0.0684	0.0033
NBP[1]325*	0.3029	0.0008	0.9528	0.0040	0.0521	0.0025
NBP[1]351*	0.2456	0.0006	0.8214	0.0035	0.0445	0.0021
NBP[1]377*	0.2247	0.0006	0.8014	0.0034	0.0429	0.0021
NBP[1]402*	0.2061	0.0005	0.7838	0.0033	0.0416	0.0020
NBP[1]428*	0.1961	0.0005	0.7956	0.0033	0.0418	0.0020
NBP[1]454*	0.1956	0.0005	0.8480	0.0036	0.0441	0.0021
NBP[1]480*	0.1982	0.0005	0.9182	0.0039	0.0473	0.0023
NBP[1]505*	0.1920	0.0005	0.9484	0.0040	0.0484	0.0023
NBP[1]531*	0.1852	0.0005	0.9740	0.0041	0.0492	0.0024
NBP[1]557*	0.1784	0.0005	0.9978	0.0042	0.0500	0.0024
NBP[1]582*	0.1706	0.0004	1.0132	0.0043	0.0503	0.0024
NBP[1]608*	0.1643	0.0004	1.0351	0.0044	0.0510	0.0025
NBP[1]634*	0.1611	0.0004	1.0753	0.0045	0.0526	0.0025
NBP[1]659*	0.1586	0.0004	1.1194	0.0047	0.0543	0.0026
NBP[1]685*	0.1641	0.0004	1.2227	0.0051	0.0588	0.0028
NBP[1]711*	0.1715	0.0004	1.3445	0.0057	0.0642	0.0031
NBP[1]736*	0.1697	0.0004	1.3915	0.0059	0.0659	0.0032
NBP[1]762*	0.1653	0.0004	1.4214	0.0060	0.0669	0.0032
NBP[1]788*	0.1585	0.0004	1.4424	0.0061	0.0674	0.0032
NBP[1]825*	0.2655	0.0007	2.5963	0.0109	0.1201	0.0058
NBP[1]873*	0.1830	0.0005	1.9404	0.0082	0.0887	0.0043
NBP[1]926*	0.1437	0.0004	1.6472	0.0069	0.0744	0.0036
NBP[1]978*	0.1474	0.0004	1.8524	0.0078	0.0825	0.0040
NBP[1]1021*	0.0728	0.0002	0.9655	0.0041	0.0426	0.0020
NBP[1]1075*	0.0449	0.0001	0.6310	0.0027	0.0276	0.0013
NBP[1]1123*	0.0417	0.0001	0.6267	0.0026	0.0271	0.0013
NBP[1]1173*	0.0300	0.0001	0.4772	0.0020	0.0205	0.0010
NBP[1]1250*	0.0393	0.0001	0.6767	0.0028	0.0287	0.0014
NBP[1]1339*	0.0364	0.0001	0.6999	0.0029	0.0291	0.0014
NBP[1]1432*	0.0257	0.0001	0.5397	0.0023	0.0221	0.0011
NBP[1]1528*	0.0180	0.0000	0.4082	0.0017	0.0165	0.0008
NBP[1]1637*	0.0127	0.0000	0.3047	0.0013	0.0122	0.0006
NBP[1]1732*	0.0101	0.0000	0.2565	0.0011	0.0101	0.0005

* Specified by user.

Material Stream: 8 (continued)

Fluid Package: Basis-1
Property Package: Peng-Robinson

COMPOSITION

Overall Phase (continued)

Vapour Fraction 0.6795

COMPONENTS	MOLAR FLOW (kgmole/h)	MOLE FRACTION	MASS FLOW (tonne/d)	MASS FRACTION	LIQUID VOLUME FLOW (m3/h)	LIQUID VOLUME FRACTION
NBP[1]1819*	0.0097	0.0000	0.2590	0.0011	0.0101	0.0005
NBP[1]1913*	0.0112	0.0000	0.3148	0.0013	0.0121	0.0006
Total	392.1623	1.0000	237.5489	1.0000	20.8162	1.0000

Vapour Phase

Phase Fraction 0.6795

COMPONENTS	MOLAR FLOW (kgmole/h)	MOLE FRACTION	MASS FLOW (tonne/d)	MASS FRACTION	LIQUID VOLUME FLOW (m3/h)	LIQUID VOLUME FRACTION
Methane	204.0796	0.7658	78.5767	0.5733	10.9355	0.6907
Ethane	27.3234	0.1025	19.7187	0.1439	2.3100	0.1459
Propane	13.3253	0.0500	14.1025	0.1029	1.1597	0.0732
i-Butane	1.5558	0.0058	2.1702	0.0158	0.1609	0.0102
n-Butane	2.8316	0.0106	3.9500	0.0288	0.2822	0.0178
i-Pentane	0.4661	0.0017	0.8072	0.0059	0.0539	0.0034
n-Pentane	0.4732	0.0018	0.8194	0.0060	0.0542	0.0034
n-Hexane	0.4069	0.0015	0.8416	0.0061	0.0529	0.0033
Nitrogen	5.5622	0.0209	3.7395	0.0273	0.1932	0.0122
CO2	9.0433	0.0339	9.5518	0.0697	0.4822	0.0305
H2S	0.0005	0.0000	0.0004	0.0000	0.0000	0.0000
H2O	0.4135	0.0016	0.1788	0.0013	0.0075	0.0005
NBP[1]95*	0.1440	0.0005	0.2347	0.0017	0.0144	0.0009
NBP[1]121*	0.1368	0.0005	0.2391	0.0017	0.0145	0.0009
NBP[1]147*	0.1346	0.0005	0.2591	0.0019	0.0154	0.0010
NBP[1]171*	0.1933	0.0007	0.4067	0.0030	0.0238	0.0015
NBP[1]195*	0.1840	0.0007	0.4133	0.0030	0.0239	0.0015
NBP[1]222*	0.0904	0.0003	0.2183	0.0016	0.0125	0.0008
NBP[1]248*	0.0490	0.0002	0.1272	0.0009	0.0072	0.0005
NBP[1]273*	0.0250	0.0001	0.0695	0.0005	0.0039	0.0002
NBP[1]299*	0.0121	0.0000	0.0359	0.0003	0.0020	0.0001
NBP[1]325*	0.0052	0.0000	0.0164	0.0001	0.0009	0.0001
NBP[1]351*	0.0025	0.0000	0.0082	0.0001	0.0004	0.0000
NBP[1]377*	0.0013	0.0000	0.0045	0.0000	0.0002	0.0000
NBP[1]402*	0.0006	0.0000	0.0024	0.0000	0.0001	0.0000
NBP[1]428*	0.0003	0.0000	0.0013	0.0000	0.0001	0.0000
NBP[1]454*	0.0002	0.0000	0.0008	0.0000	0.0000	0.0000
NBP[1]480*	0.0001	0.0000	0.0004	0.0000	0.0000	0.0000
NBP[1]505*	0.0000	0.0000	0.0002	0.0000	0.0000	0.0000
NBP[1]531*	0.0000	0.0000	0.0001	0.0000	0.0000	0.0000
NBP[1]557*	0.0000	0.0000	0.0001	0.0000	0.0000	0.0000
NBP[1]582*	0.0000	0.0000	0.0000	0.0000	0.0000	0.0000
NBP[1]608*	0.0000	0.0000	0.0000	0.0000	0.0000	0.0000
NBP[1]634*	0.0000	0.0000	0.0000	0.0000	0.0000	0.0000
NBP[1]659*	0.0000	0.0000	0.0000	0.0000	0.0000	0.0000
NBP[1]685*	0.0000	0.0000	0.0000	0.0000	0.0000	0.0000
NBP[1]711*	0.0000	0.0000	0.0000	0.0000	0.0000	0.0000
NBP[1]736*	0.0000	0.0000	0.0000	0.0000	0.0000	0.0000
NBP[1]762*	0.0000	0.0000	0.0000	0.0000	0.0000	0.0000
NBP[1]788*	0.0000	0.0000	0.0000	0.0000	0.0000	0.0000
NBP[1]825*	0.0000	0.0000	0.0000	0.0000	0.0000	0.0000
NBP[1]873*	0.0000	0.0000	0.0000	0.0000	0.0000	0.0000
NBP[1]926*	0.0000	0.0000	0.0000	0.0000	0.0000	0.0000
NBP[1]978*	0.0000	0.0000	0.0000	0.0000	0.0000	0.0000
NBP[1]1021*	0.0000	0.0000	0.0000	0.0000	0.0000	0.0000
NBP[1]1075*	0.0000	0.0000	0.0000	0.0000	0.0000	0.0000
NBP[1]1123*	0.0000	0.0000	0.0000	0.0000	0.0000	0.0000

* Specified by user.

Material Stream: 8 (continued)

Fluid Package: Basis-1
Property Package: Peng-Robinson

COMPOSITION

Vapour Phase (continued)

Phase Fraction 0.6795

COMPONENTS	MOLAR FLOW (kgmole/h)	MOLE FRACTION	MASS FLOW (tonne/d)	MASS FRACTION	LIQUID VOLUME FLOW (m3/h)	LIQUID VOLUME FRACTION
NBP[1]1173*	0.0000	0.0000	0.0000	0.0000	0.0000	0.0000
NBP[1]1250*	0.0000	0.0000	0.0000	0.0000	0.0000	0.0000
NBP[1]1339*	0.0000	0.0000	0.0000	0.0000	0.0000	0.0000
NBP[1]1432*	0.0000	0.0000	0.0000	0.0000	0.0000	0.0000
NBP[1]1528*	0.0000	0.0000	0.0000	0.0000	0.0000	0.0000
NBP[1]1637*	0.0000	0.0000	0.0000	0.0000	0.0000	0.0000
NBP[1]1732*	0.0000	0.0000	0.0000	0.0000	0.0000	0.0000
NBP[1]1819*	0.0091	0.0000	0.2419	0.0018	0.0094	0.0006
NBP[1]1913*	0.0112	0.0000	0.3148	0.0023	0.0121	0.0008
Total	266.4811	1.0000	137.0519	1.0000	15.8332	1.0000

Liquid Phase

Phase Fraction 4.937e-002

COMPONENTS	MOLAR FLOW (kgmole/h)	MOLE FRACTION	MASS FLOW (tonne/d)	MASS FRACTION	LIQUID VOLUME FLOW (m3/h)	LIQUID VOLUME FRACTION
Methane	2.9643	0.1531	1.1414	0.0209	0.1588	0.0519
Ethane	1.4772	0.0763	1.0661	0.0196	0.1249	0.0408
Propane	1.9425	0.1003	2.0558	0.0377	0.1691	0.0552
i-Butane	0.4729	0.0244	0.6597	0.0121	0.0489	0.0160
n-Butane	1.1197	0.0578	1.5619	0.0287	0.1116	0.0364
i-Pentane	0.3834	0.0198	0.6638	0.0122	0.0444	0.0145
n-Pentane	0.4870	0.0252	0.8433	0.0155	0.0558	0.0182
n-Hexane	1.0629	0.0549	2.1983	0.0403	0.1382	0.0451
Nitrogen	0.0356	0.0018	0.0239	0.0004	0.0012	0.0004
CO2	0.3219	0.0166	0.3400	0.0062	0.0172	0.0056
H2S	0.0000	0.0000	0.0000	0.0000	0.0000	0.0000
H2O	0.0155	0.0008	0.0067	0.0001	0.0003	0.0001
NBP[1]95*	0.1443	0.0075	0.2352	0.0043	0.0144	0.0047
NBP[1]121*	0.2014	0.0104	0.3521	0.0065	0.0213	0.0070
NBP[1]147*	0.2968	0.0153	0.5713	0.0105	0.0340	0.0111
NBP[1]171*	0.6292	0.0325	1.3239	0.0243	0.0775	0.0253
NBP[1]195*	0.8917	0.0461	2.0027	0.0367	0.1159	0.0378
NBP[1]222*	0.7100	0.0367	1.7148	0.0315	0.0980	0.0320
NBP[1]248*	0.6167	0.0319	1.6015	0.0294	0.0904	0.0295
NBP[1]273*	0.5108	0.0264	1.4186	0.0260	0.0792	0.0259
NBP[1]299*	0.4064	0.0210	1.2034	0.0221	0.0665	0.0217
NBP[1]325*	0.2976	0.0154	0.9363	0.0172	0.0512	0.0167
NBP[1]351*	0.2432	0.0126	0.8132	0.0149	0.0440	0.0144
NBP[1]377*	0.2235	0.0115	0.7969	0.0146	0.0427	0.0139
NBP[1]402*	0.2055	0.0106	0.7814	0.0143	0.0414	0.0135
NBP[1]428*	0.1957	0.0101	0.7942	0.0146	0.0417	0.0136
NBP[1]454*	0.1954	0.0101	0.8473	0.0155	0.0441	0.0144
NBP[1]480*	0.1981	0.0102	0.9177	0.0168	0.0472	0.0154
NBP[1]505*	0.1920	0.0099	0.9481	0.0174	0.0484	0.0158
NBP[1]531*	0.1852	0.0096	0.9739	0.0179	0.0492	0.0161
NBP[1]557*	0.1784	0.0092	0.9978	0.0183	0.0500	0.0163
NBP[1]582*	0.1706	0.0088	1.0132	0.0186	0.0503	0.0164
NBP[1]608*	0.1643	0.0085	1.0351	0.0190	0.0510	0.0167
NBP[1]634*	0.1611	0.0083	1.0753	0.0197	0.0526	0.0172
NBP[1]659*	0.1586	0.0082	1.1194	0.0205	0.0543	0.0177
NBP[1]685*	0.1641	0.0085	1.2227	0.0224	0.0588	0.0192
NBP[1]711*	0.1715	0.0089	1.3445	0.0247	0.0642	0.0210
NBP[1]736*	0.1697	0.0088	1.3915	0.0255	0.0659	0.0215
NBP[1]762*	0.1653	0.0085	1.4214	0.0261	0.0669	0.0218
NBP[1]788*	0.1585	0.0082	1.4424	0.0265	0.0674	0.0220

* Specified by user.

Material Stream: 8 (continued)

Fluid Package: Basis-1
Property Package: Peng-Robinson

COMPOSITION

Liquid Phase (continued)

Phase Fraction 4.937e-002

COMPONENTS	MOLAR FLOW (kgmole/h)	MOLE FRACTION	MASS FLOW (tonne/d)	MASS FRACTION	LIQUID VOLUME FLOW (m3/h)	LIQUID VOLUME FRACTION
NBP[1]825*	0.2655	0.0137	2.5963	0.0476	0.1201	0.0392
NBP[1]873*	0.1830	0.0095	1.9404	0.0356	0.0887	0.0290
NBP[1]926*	0.1437	0.0074	1.6472	0.0302	0.0744	0.0243
NBP[1]978*	0.1474	0.0076	1.8524	0.0340	0.0825	0.0269
NBP[1]1021*	0.0728	0.0038	0.9655	0.0177	0.0426	0.0139
NBP[1]1075*	0.0449	0.0023	0.6310	0.0116	0.0276	0.0090
NBP[1]1123*	0.0417	0.0022	0.6267	0.0115	0.0271	0.0089
NBP[1]1173*	0.0300	0.0015	0.4772	0.0088	0.0205	0.0067
NBP[1]1250*	0.0393	0.0020	0.6767	0.0124	0.0287	0.0094
NBP[1]1339*	0.0364	0.0019	0.6999	0.0128	0.0291	0.0095
NBP[1]1432*	0.0257	0.0013	0.5397	0.0099	0.0221	0.0072
NBP[1]1528*	0.0180	0.0009	0.4082	0.0075	0.0165	0.0054
NBP[1]1637*	0.0127	0.0007	0.3047	0.0056	0.0122	0.0040
NBP[1]1732*	0.0101	0.0005	0.2565	0.0047	0.0101	0.0033
NBP[1]1819*	0.0006	0.0000	0.0171	0.0003	0.0007	0.0002
NBP[1]1913*	0.0000	0.0000	0.0000	0.0000	0.0000	0.0000
Total	19.3601	1.0000	54.4963	1.0000	3.0619	1.0000

Aqueous Phase

Phase Fraction 0.2711

COMPONENTS	MOLAR FLOW (kgmole/h)	MOLE FRACTION	MASS FLOW (tonne/d)	MASS FRACTION	LIQUID VOLUME FLOW (m3/h)	LIQUID VOLUME FRACTION
Methane	0.0000	0.0000	0.0000	0.0000	0.0000	0.0000
Ethane	0.0000	0.0000	0.0000	0.0000	0.0000	0.0000
Propane	0.0000	0.0000	0.0000	0.0000	0.0000	0.0000
i-Butane	0.0000	0.0000	0.0000	0.0000	0.0000	0.0000
n-Butane	0.0000	0.0000	0.0000	0.0000	0.0000	0.0000
i-Pentane	0.0000	0.0000	0.0000	0.0000	0.0000	0.0000
n-Pentane	0.0000	0.0000	0.0000	0.0000	0.0000	0.0000
n-Hexane	0.0000	0.0000	0.0000	0.0000	0.0000	0.0000
Nitrogen	0.0011	0.0000	0.0007	0.0000	0.0000	0.0000
CO2	0.0499	0.0005	0.0527	0.0011	0.0027	0.0014
H2S	0.0000	0.0000	0.0000	0.0000	0.0000	0.0000
H2O	106.2700	0.9995	45.9472	0.9988	1.9183	0.9986
NBP[1]95*	0.0000	0.0000	0.0000	0.0000	0.0000	0.0000
NBP[1]121*	0.0000	0.0000	0.0000	0.0000	0.0000	0.0000
NBP[1]147*	0.0000	0.0000	0.0000	0.0000	0.0000	0.0000
NBP[1]171*	0.0000	0.0000	0.0000	0.0000	0.0000	0.0000
NBP[1]195*	0.0000	0.0000	0.0000	0.0000	0.0000	0.0000
NBP[1]222*	0.0000	0.0000	0.0000	0.0000	0.0000	0.0000
NBP[1]248*	0.0000	0.0000	0.0000	0.0000	0.0000	0.0000
NBP[1]273*	0.0000	0.0000	0.0000	0.0000	0.0000	0.0000
NBP[1]299*	0.0000	0.0000	0.0000	0.0000	0.0000	0.0000
NBP[1]325*	0.0000	0.0000	0.0000	0.0000	0.0000	0.0000
NBP[1]351*	0.0000	0.0000	0.0000	0.0000	0.0000	0.0000
NBP[1]377*	0.0000	0.0000	0.0000	0.0000	0.0000	0.0000
NBP[1]402*	0.0000	0.0000	0.0000	0.0000	0.0000	0.0000
NBP[1]428*	0.0000	0.0000	0.0000	0.0000	0.0000	0.0000
NBP[1]454*	0.0000	0.0000	0.0000	0.0000	0.0000	0.0000
NBP[1]480*	0.0000	0.0000	0.0000	0.0000	0.0000	0.0000
NBP[1]505*	0.0000	0.0000	0.0000	0.0000	0.0000	0.0000
NBP[1]531*	0.0000	0.0000	0.0000	0.0000	0.0000	0.0000
NBP[1]557*	0.0000	0.0000	0.0000	0.0000	0.0000	0.0000
NBP[1]582*	0.0000	0.0000	0.0000	0.0000	0.0000	0.0000
NBP[1]608*	0.0000	0.0000	0.0000	0.0000	0.0000	0.0000

* Specified by user.

Material Stream: 8 (continued)

Fluid Package: Basis-1
Property Package: Peng-Robinson

COMPOSITION

Aqueous Phase (continued)

Phase Fraction 0.2711

COMPONENTS	MOLAR FLOW (kgmole/h)	MOLE FRACTION	MASS FLOW (tonne/d)	MASS FRACTION	LIQUID VOLUME FLOW (m3/h)	LIQUID VOLUME FRACTION
NBP[1]634*	0.0000	0.0000	0.0000	0.0000	0.0000	0.0000
NBP[1]659*	0.0000	0.0000	0.0000	0.0000	0.0000	0.0000
NBP[1]685*	0.0000	0.0000	0.0000	0.0000	0.0000	0.0000
NBP[1]711*	0.0000	0.0000	0.0000	0.0000	0.0000	0.0000
NBP[1]736*	0.0000	0.0000	0.0000	0.0000	0.0000	0.0000
NBP[1]762*	0.0000	0.0000	0.0000	0.0000	0.0000	0.0000
NBP[1]788*	0.0000	0.0000	0.0000	0.0000	0.0000	0.0000
NBP[1]825*	0.0000	0.0000	0.0000	0.0000	0.0000	0.0000
NBP[1]873*	0.0000	0.0000	0.0000	0.0000	0.0000	0.0000
NBP[1]926*	0.0000	0.0000	0.0000	0.0000	0.0000	0.0000
NBP[1]978*	0.0000	0.0000	0.0000	0.0000	0.0000	0.0000
NBP[1]1021*	0.0000	0.0000	0.0000	0.0000	0.0000	0.0000
NBP[1]1075*	0.0000	0.0000	0.0000	0.0000	0.0000	0.0000
NBP[1]1123*	0.0000	0.0000	0.0000	0.0000	0.0000	0.0000
NBP[1]1173*	0.0000	0.0000	0.0000	0.0000	0.0000	0.0000
NBP[1]1250*	0.0000	0.0000	0.0000	0.0000	0.0000	0.0000
NBP[1]1339*	0.0000	0.0000	0.0000	0.0000	0.0000	0.0000
NBP[1]1432*	0.0000	0.0000	0.0000	0.0000	0.0000	0.0000
NBP[1]1528*	0.0000	0.0000	0.0000	0.0000	0.0000	0.0000
NBP[1]1637*	0.0000	0.0000	0.0000	0.0000	0.0000	0.0000
NBP[1]1732*	0.0000	0.0000	0.0000	0.0000	0.0000	0.0000
NBP[1]1819*	0.0000	0.0000	0.0000	0.0000	0.0000	0.0000
NBP[1]1913*	0.0000	0.0000	0.0000	0.0000	0.0000	0.0000
Total	106.3211	1.0000	46.0006	1.0000	1.9210	1.0000

Material Stream: 9

Fluid Package: Basis-1
Property Package: Peng-Robinson

CONDITIONS

		Overall	Vapour Phase	Liquid Phase	Aqueous Phase
Vapour / Phase Fraction		0.0000	0.0000	1.0000	0.0000
Temperature:	(F)	96.15	96.15	96.15	96.15
Pressure:	(psig)	645.0	645.0	645.0	645.0
Molar Flow	(MMSCFD)	0.3879	0.0000	0.3879	0.0000
Mass Flow	(tonne/d)	54.48	0.0000	54.48	0.0000
Std Ideal Liq Vol Flow	(barrel/day)	461.8	0.0000	461.8	0.0000
Molar Enthalpy	(kJ/kgmole)	-2.700e+005	-8.942e+004	-2.700e+005	-2.854e+005
Molar Entropy	(kJ/kgmole-C)	216.0	156.4	216.0	56.42
Heat Flow	(MMBtu/hr)	-4.943	0.0000	-4.943	0.0000
Liq Vol Flow @Std Cond	(barrel/day)	444.2 *	0.0000	444.2	0.0000

PROPERTIES

		Overall	Vapour Phase	Liquid Phase	Aqueous Phase
Molecular Weight		117.5	21.43	117.5	18.03
Molar Density	(kgmole/m3)	6.391	2.054	6.391	55.52
Mass Density	(kg/m3)	750.9	44.03	750.9	1001
Act. Volume Flow	(barrel/day)	456.3	0.0000	456.3	0.0000
Mass Enthalpy	(kJ/kg)	-2298	-4173	-2298	-1.583e+004
Mass Entropy	(kJ/kg-C)	1.838	7.301	1.838	3.130
Heat Capacity	(kJ/kgmole-C)	241.4	50.16	241.4	77.63
Mass Heat Capacity	(kJ/kg-C)	2.055	2.341	2.055	4.306
LHV Molar Basis (Std)	(Btu/SCF)	---	---	---	3.285e-004
LHV Mass Basis (Std)	(kJ/kg)	---	---	---	1.609e-002
Phase Fraction [Vol. Basis]		---	---	1.000	---

* Specified by user.

Material Stream: 9 (continued)

Fluid Package: Basis-1
Property Package: Peng-Robinson

PROPERTIES

	Overall	Vapour Phase	Liquid Phase	Aqueous Phase
Phase Fraction [Mass Basis]	0.0000	0.0000	1.000	0.0000
Partial Pressure of CO2 (psig)	-14.70	---	---	---
Cost Based on Flow (Cost/s)	0.0000	0.0000	0.0000	0.0000
Act. Gas Flow (ACT_m3/h)	---	---	---	---
Avg. Liq. Density (kgmole/m3)	6.314	16.83	6.314	55.35
Specific Heat (kJ/kgmole-C)	241.4	50.16	241.4	77.63
Std. Gas Flow (STD_m3/h)	456.8	0.0000	456.8	0.0000
Std. Ideal Liq. Mass Density (kg/m3)	741.9	360.7	741.9	997.7
Act. Liq. Flow (barrel/day)	456.3	---	456.3	0.0000
Z Factor	---	0.8623	0.2772	3.191e-002
Watson K	12.04	17.25	12.04	8.495
User Property	---	---	---	---
Partial Pressure of H2S (psig)	-14.70	---	---	---
Cp/(Cp - R)	1.036	1.199	1.036	1.120
Cp/Cv	1.238	1.448	1.238	1.152
Heat of Vap. (kJ/kgmole)	2.157e+005	---	---	---
Kinematic Viscosity (cSt)	6.133	0.2860	6.133	0.7087
Liq. Mass Density (Std. Cond) (kg/m3)	771.3	0.9099	771.3	1015
Liq. Vol. Flow (Std. Cond) (barrel/day)	444.2	0.0000	444.2	0.0000
Liquid Fraction	1.000	0.0000	1.000	1.000
Molar Volume (m3/kgmole)	0.1565	0.4867	0.1565	1.801e-002
Mass Heat of Vap. (kJ/kg)	1836	---	---	---
Phase Fraction [Molar Basis]	0.0000	0.0000	1.0000	0.0000
Surface Tension (dyne/cm)	14.21	---	14.21	70.22
Thermal Conductivity (W/m-K)	9.629e-002	3.531e-002	9.629e-002	0.6259
Viscosity (cP)	4.605	1.259e-002	4.605	0.7094
Cv (Semi-Ideal) (kJ/kgmole-C)	233.1	41.85	233.1	69.31
Mass Cv (Semi-Ideal) (kJ/kg-C)	1.984	1.953	1.984	3.845
Cv (kJ/kgmole-C)	195.0	34.66	195.0	67.36
Mass Cv (kJ/kg-C)	1.660	1.617	1.660	3.736
Cv (Ent. Method) (kJ/kgmole-C)	---	---	---	66.70
Mass Cv (Ent. Method) (kJ/kg-C)	---	---	---	3.700
Cp/Cv (Ent. Method)	---	---	---	1.164
Reid VP at 37.8 C (psig)	134.3	---	134.3	---
True VP at 37.8 C (psig)	655.3	3720	655.3	32.98
Liq. Vol. Flow - Sum(Std. Cond) (barrel/day)	444.2	0.0000	444.2	0.0000
HHV Molar Basis (Std) (Btu/SCF)	---	---	---	46.44
HHV Mass Basis (Std) (kJ/kg)	---	---	---	2274
CO2 Loading	---	---	---	---
CO2 App ML Con (kgmole/m3)	0.1058	---	0.1058	---
CO2 App WT Con (kgmol/kg)	1.409e-004	---	1.409e-004	---
Phase Fraction [Act. Vol. Basis]	0.0000	0.0000	1.000	0.0000
Mass Exergy (kJ/kg)	27.74	---	---	---
Viscosity Index	20.58	---	---	---
Ideal Gas Cp/Cv	1.046	1.246	1.046	1.328
Ideal Gas Cp (kJ/kgmole-C)	190.0	42.18	190.0	33.64
Mass Ideal Gas Cp (kJ/kg-C)	1.617	1.968	1.617	1.866
Bubble Point Pressure (psig)	644.9	---	---	---

COMPOSITION

Overall Phase

Vapour Fraction 0.0000

COMPONENTS	MOLAR FLOW (kgmole/h)	MOLE FRACTION	MASS FLOW (tonne/d)	MASS FRACTION	LIQUID VOLUME FLOW (m3/h)	LIQUID VOLUME FRACTION
Methane	2.9394	0.1522	1.1318	0.0208	0.1575	0.0515
Ethane	1.4689	0.0760	1.0601	0.0195	0.1242	0.0406
Propane	1.9360	0.1002	2.0489	0.0376	0.1685	0.0551

Licensed to: PETROCHEMICAL ENGINEERIN
* Specified by user.

Material Stream: 9 (continued)

Fluid Package: Basis-1
Property Package: Peng-Robinson

COMPOSITION

Overall Phase (continued)

Vapour Fraction 0.0000

COMPONENTS	MOLAR FLOW (kgmole/h)	MOLE FRACTION	MASS FLOW (tonne/d)	MASS FRACTION	LIQUID VOLUME FLOW (m3/h)	LIQUID VOLUME FRACTION
i-Butane	0.4722	0.0244	0.6587	0.0121	0.0488	0.0160
n-Butane	1.1183	0.0579	1.5600	0.0286	0.1115	0.0364
i-Pentane	0.3834	0.0198	0.6638	0.0122	0.0444	0.0145
n-Pentane	0.4871	0.0252	0.8435	0.0155	0.0558	0.0182
n-Hexane	1.0636	0.0551	2.1999	0.0404	0.1383	0.0452
Nitrogen	0.0353	0.0018	0.0237	0.0004	0.0012	0.0004
CO2	0.3198	0.0166	0.3377	0.0062	0.0171	0.0056
H2S	0.0000	0.0000	0.0000	0.0000	0.0000	0.0000
H2O	0.0154	0.0008	0.0066	0.0001	0.0003	0.0001
NBP[1]95*	0.1443	0.0075	0.2353	0.0043	0.0144	0.0047
NBP[1]121*	0.2015	0.0104	0.3522	0.0065	0.0213	0.0070
NBP[1]147*	0.2970	0.0154	0.5717	0.0105	0.0340	0.0111
NBP[1]171*	0.6296	0.0326	1.3247	0.0243	0.0775	0.0253
NBP[1]195*	0.8923	0.0462	2.0039	0.0368	0.1159	0.0379
NBP[1]222*	0.7104	0.0368	1.7157	0.0315	0.0981	0.0321
NBP[1]248*	0.6169	0.0319	1.6022	0.0294	0.0905	0.0296
NBP[1]273*	0.5109	0.0264	1.4190	0.0260	0.0792	0.0259
NBP[1]299*	0.4065	0.0210	1.2037	0.0221	0.0665	0.0217
NBP[1]325*	0.2977	0.0154	0.9365	0.0172	0.0512	0.0167
NBP[1]351*	0.2432	0.0126	0.8133	0.0149	0.0440	0.0144
NBP[1]377*	0.2235	0.0116	0.7969	0.0146	0.0427	0.0140
NBP[1]402*	0.2055	0.0106	0.7814	0.0143	0.0414	0.0135
NBP[1]428*	0.1958	0.0101	0.7942	0.0146	0.0417	0.0136
NBP[1]454*	0.1954	0.0101	0.8473	0.0156	0.0441	0.0144
NBP[1]480*	0.1981	0.0103	0.9177	0.0168	0.0473	0.0154
NBP[1]505*	0.1920	0.0099	0.9482	0.0174	0.0484	0.0158
NBP[1]531*	0.1852	0.0096	0.9739	0.0179	0.0492	0.0161
NBP[1]557*	0.1784	0.0092	0.9978	0.0183	0.0500	0.0163
NBP[1]582*	0.1706	0.0088	1.0132	0.0186	0.0503	0.0165
NBP[1]608*	0.1643	0.0085	1.0351	0.0190	0.0510	0.0167
NBP[1]634*	0.1611	0.0083	1.0753	0.0197	0.0526	0.0172
NBP[1]659*	0.1586	0.0082	1.1194	0.0205	0.0543	0.0177
NBP[1]685*	0.1641	0.0085	1.2227	0.0224	0.0588	0.0192
NBP[1]711*	0.1715	0.0089	1.3445	0.0247	0.0642	0.0210
NBP[1]736*	0.1697	0.0088	1.3915	0.0255	0.0659	0.0215
NBP[1]762*	0.1653	0.0086	1.4214	0.0261	0.0669	0.0219
NBP[1]788*	0.1585	0.0082	1.4424	0.0265	0.0674	0.0220
NBP[1]825*	0.2655	0.0137	2.5963	0.0477	0.1201	0.0393
NBP[1]873*	0.1830	0.0095	1.9404	0.0356	0.0887	0.0290
NBP[1]926*	0.1437	0.0074	1.6472	0.0302	0.0744	0.0243
NBP[1]978*	0.1474	0.0076	1.8524	0.0340	0.0825	0.0270
NBP[1]1021*	0.0728	0.0038	0.9655	0.0177	0.0426	0.0139
NBP[1]1075*	0.0449	0.0023	0.6310	0.0116	0.0276	0.0090
NBP[1]1123*	0.0417	0.0022	0.6267	0.0115	0.0271	0.0089
NBP[1]1173*	0.0300	0.0016	0.4772	0.0088	0.0205	0.0067
NBP[1]1250*	0.0393	0.0020	0.6767	0.0124	0.0287	0.0094
NBP[1]1339*	0.0364	0.0019	0.6999	0.0128	0.0291	0.0095
NBP[1]1432*	0.0257	0.0013	0.5397	0.0099	0.0221	0.0072
NBP[1]1528*	0.0180	0.0009	0.4082	0.0075	0.0165	0.0054
NBP[1]1637*	0.0127	0.0007	0.3047	0.0056	0.0122	0.0040
NBP[1]1732*	0.0101	0.0005	0.2565	0.0047	0.0101	0.0033
NBP[1]1819*	0.0007	0.0000	0.0194	0.0004	0.0008	0.0002
NBP[1]1913*	0.0000	0.0000	0.0000	0.0000	0.0000	0.0000
Total	19.3189	1.0000	54.4778	1.0000	3.0595	1.0000

* Specified by user.

Material Stream: 9 (continued)

Fluid Package: Basis-1
Property Package: Peng-Robinson

COMPOSITION

Vapour Phase

Phase Fraction 0.0000

COMPONENTS	MOLAR FLOW (kgmole/h)	MOLE FRACTION	MASS FLOW (tonne/d)	MASS FRACTION	LIQUID VOLUME FLOW (m3/h)	LIQUID VOLUME FRACTION
Methane	0.0000	0.7658	0.0000	0.5733	0.0000	0.6906
Ethane	0.0000	0.1025	0.0000	0.1439	0.0000	0.1459
Propane	0.0000	0.0500	0.0000	0.1029	0.0000	0.0733
i-Butane	0.0000	0.0058	0.0000	0.0158	0.0000	0.0102
n-Butane	0.0000	0.0106	0.0000	0.0288	0.0000	0.0178
i-Pentane	0.0000	0.0017	0.0000	0.0059	0.0000	0.0034
n-Pentane	0.0000	0.0018	0.0000	0.0060	0.0000	0.0034
n-Hexane	0.0000	0.0015	0.0000	0.0061	0.0000	0.0033
Nitrogen	0.0000	0.0209	0.0000	0.0273	0.0000	0.0122
CO2	0.0000	0.0339	0.0000	0.0697	0.0000	0.0305
H2S	0.0000	0.0000	0.0000	0.0000	0.0000	0.0000
H2O	0.0000	0.0016	0.0000	0.0013	0.0000	0.0005
NBP[1]95*	0.0000	0.0005	0.0000	0.0017	0.0000	0.0009
NBP[1]121*	0.0000	0.0005	0.0000	0.0017	0.0000	0.0009
NBP[1]147*	0.0000	0.0005	0.0000	0.0019	0.0000	0.0010
NBP[1]171*	0.0000	0.0007	0.0000	0.0030	0.0000	0.0015
NBP[1]195*	0.0000	0.0007	0.0000	0.0030	0.0000	0.0015
NBP[1]222*	0.0000	0.0003	0.0000	0.0016	0.0000	0.0008
NBP[1]248*	0.0000	0.0002	0.0000	0.0009	0.0000	0.0005
NBP[1]273*	0.0000	0.0001	0.0000	0.0005	0.0000	0.0002
NBP[1]299*	0.0000	0.0000	0.0000	0.0003	0.0000	0.0001
NBP[1]325*	0.0000	0.0000	0.0000	0.0001	0.0000	0.0001
NBP[1]351*	0.0000	0.0000	0.0000	0.0001	0.0000	0.0000
NBP[1]377*	0.0000	0.0000	0.0000	0.0000	0.0000	0.0000
NBP[1]402*	0.0000	0.0000	0.0000	0.0000	0.0000	0.0000
NBP[1]428*	0.0000	0.0000	0.0000	0.0000	0.0000	0.0000
NBP[1]454*	0.0000	0.0000	0.0000	0.0000	0.0000	0.0000
NBP[1]480*	0.0000	0.0000	0.0000	0.0000	0.0000	0.0000
NBP[1]505*	0.0000	0.0000	0.0000	0.0000	0.0000	0.0000
NBP[1]531*	0.0000	0.0000	0.0000	0.0000	0.0000	0.0000
NBP[1]557*	0.0000	0.0000	0.0000	0.0000	0.0000	0.0000
NBP[1]582*	0.0000	0.0000	0.0000	0.0000	0.0000	0.0000
NBP[1]608*	0.0000	0.0000	0.0000	0.0000	0.0000	0.0000
NBP[1]634*	0.0000	0.0000	0.0000	0.0000	0.0000	0.0000
NBP[1]659*	0.0000	0.0000	0.0000	0.0000	0.0000	0.0000
NBP[1]685*	0.0000	0.0000	0.0000	0.0000	0.0000	0.0000
NBP[1]711*	0.0000	0.0000	0.0000	0.0000	0.0000	0.0000
NBP[1]736*	0.0000	0.0000	0.0000	0.0000	0.0000	0.0000
NBP[1]762*	0.0000	0.0000	0.0000	0.0000	0.0000	0.0000
NBP[1]788*	0.0000	0.0000	0.0000	0.0000	0.0000	0.0000
NBP[1]825*	0.0000	0.0000	0.0000	0.0000	0.0000	0.0000
NBP[1]873*	0.0000	0.0000	0.0000	0.0000	0.0000	0.0000
NBP[1]926*	0.0000	0.0000	0.0000	0.0000	0.0000	0.0000
NBP[1]978*	0.0000	0.0000	0.0000	0.0000	0.0000	0.0000
NBP[1]1021*	0.0000	0.0000	0.0000	0.0000	0.0000	0.0000
NBP[1]1075*	0.0000	0.0000	0.0000	0.0000	0.0000	0.0000
NBP[1]1123*	0.0000	0.0000	0.0000	0.0000	0.0000	0.0000
NBP[1]1173*	0.0000	0.0000	0.0000	0.0000	0.0000	0.0000
NBP[1]1250*	0.0000	0.0000	0.0000	0.0000	0.0000	0.0000
NBP[1]1339*	0.0000	0.0000	0.0000	0.0000	0.0000	0.0000
NBP[1]1432*	0.0000	0.0000	0.0000	0.0000	0.0000	0.0000
NBP[1]1528*	0.0000	0.0000	0.0000	0.0000	0.0000	0.0000
NBP[1]1637*	0.0000	0.0000	0.0000	0.0000	0.0000	0.0000
NBP[1]1732*	0.0000	0.0000	0.0000	0.0000	0.0000	0.0000

* Specified by user.

Material Stream: 9 (continued)

Fluid Package: Basis-1
Property Package: Peng-Robinson

COMPOSITION

Vapour Phase (continued)

Phase Fraction 0.0000

COMPONENTS	MOLAR FLOW (kgmole/h)	MOLE FRACTION	MASS FLOW (tonne/d)	MASS FRACTION	LIQUID VOLUME FLOW (m3/h)	LIQUID VOLUME FRACTION
NBP[1]1819*	0.0000	0.0000	0.0000	0.0017	0.0000	0.0006
NBP[1]1913*	0.0000	0.0000	0.0000	0.0023	0.0000	0.0008
Total	0.0000	1.0000	0.0000	1.0000	0.0000	1.0000

Liquid Phase

Phase Fraction 1.000

COMPONENTS	MOLAR FLOW (kgmole/h)	MOLE FRACTION	MASS FLOW (tonne/d)	MASS FRACTION	LIQUID VOLUME FLOW (m3/h)	LIQUID VOLUME FRACTION
Methane	2.9394	0.1522	1.1318	0.0208	0.1575	0.0515
Ethane	1.4689	0.0760	1.0601	0.0195	0.1242	0.0406
Propane	1.9360	0.1002	2.0489	0.0376	0.1685	0.0551
i-Butane	0.4722	0.0244	0.6587	0.0121	0.0488	0.0160
n-Butane	1.1183	0.0579	1.5600	0.0286	0.1115	0.0364
i-Pentane	0.3834	0.0198	0.6638	0.0122	0.0444	0.0145
n-Pentane	0.4871	0.0252	0.8435	0.0155	0.0558	0.0182
n-Hexane	1.0636	0.0551	2.1999	0.0404	0.1383	0.0452
Nitrogen	0.0353	0.0018	0.0237	0.0004	0.0012	0.0004
CO2	0.3198	0.0166	0.3377	0.0062	0.0171	0.0056
H2S	0.0000	0.0000	0.0000	0.0000	0.0000	0.0000
H2O	0.0154	0.0008	0.0066	0.0001	0.0003	0.0001
NBP[1]95*	0.1443	0.0075	0.2353	0.0043	0.0144	0.0047
NBP[1]121*	0.2015	0.0104	0.3522	0.0065	0.0213	0.0070
NBP[1]147*	0.2970	0.0154	0.5717	0.0105	0.0340	0.0111
NBP[1]171*	0.6296	0.0326	1.3247	0.0243	0.0775	0.0253
NBP[1]195*	0.8923	0.0462	2.0039	0.0368	0.1159	0.0379
NBP[1]222*	0.7104	0.0368	1.7157	0.0315	0.0981	0.0321
NBP[1]248*	0.6169	0.0319	1.6022	0.0294	0.0905	0.0296
NBP[1]273*	0.5109	0.0264	1.4190	0.0260	0.0792	0.0259
NBP[1]299*	0.4065	0.0210	1.2037	0.0221	0.0665	0.0217
NBP[1]325*	0.2977	0.0154	0.9365	0.0172	0.0512	0.0167
NBP[1]351*	0.2432	0.0126	0.8133	0.0149	0.0440	0.0144
NBP[1]377*	0.2235	0.0116	0.7969	0.0146	0.0427	0.0140
NBP[1]402*	0.2055	0.0106	0.7814	0.0143	0.0414	0.0135
NBP[1]428*	0.1958	0.0101	0.7942	0.0146	0.0417	0.0136
NBP[1]454*	0.1954	0.0101	0.8473	0.0156	0.0441	0.0144
NBP[1]480*	0.1981	0.0103	0.9177	0.0168	0.0473	0.0154
NBP[1]505*	0.1920	0.0099	0.9482	0.0174	0.0484	0.0158
NBP[1]531*	0.1852	0.0096	0.9739	0.0179	0.0492	0.0161
NBP[1]557*	0.1784	0.0092	0.9978	0.0183	0.0500	0.0163
NBP[1]582*	0.1706	0.0088	1.0132	0.0186	0.0503	0.0165
NBP[1]608*	0.1643	0.0085	1.0351	0.0190	0.0510	0.0167
NBP[1]634*	0.1611	0.0083	1.0753	0.0197	0.0526	0.0172
NBP[1]659*	0.1586	0.0082	1.1194	0.0205	0.0543	0.0177
NBP[1]685*	0.1641	0.0085	1.2227	0.0224	0.0588	0.0192
NBP[1]711*	0.1715	0.0089	1.3445	0.0247	0.0642	0.0210
NBP[1]736*	0.1697	0.0088	1.3915	0.0255	0.0659	0.0215
NBP[1]762*	0.1653	0.0086	1.4214	0.0261	0.0669	0.0219
NBP[1]788*	0.1585	0.0082	1.4424	0.0265	0.0674	0.0220
NBP[1]825*	0.2655	0.0137	2.5963	0.0477	0.1201	0.0393
NBP[1]873*	0.1830	0.0095	1.9404	0.0356	0.0887	0.0290
NBP[1]926*	0.1437	0.0074	1.6472	0.0302	0.0744	0.0243
NBP[1]978*	0.1474	0.0076	1.8524	0.0340	0.0825	0.0270
NBP[1]1021*	0.0728	0.0038	0.9655	0.0177	0.0426	0.0139
NBP[1]1075*	0.0449	0.0023	0.6310	0.0116	0.0276	0.0090
NBP[1]1123*	0.0417	0.0022	0.6267	0.0115	0.0271	0.0089

* Specified by user.

Material Stream: 9 (continued)

Fluid Package: Basis-1
Property Package: Peng-Robinson

COMPOSITION

Liquid Phase (continued)

Phase Fraction 1.000

COMPONENTS	MOLAR FLOW (kgmole/h)	MOLE FRACTION	MASS FLOW (tonne/d)	MASS FRACTION	LIQUID VOLUME FLOW (m3/h)	LIQUID VOLUME FRACTION
NBP[1]1173*	0.0300	0.0016	0.4772	0.0088	0.0205	0.0067
NBP[1]1250*	0.0393	0.0020	0.6767	0.0124	0.0287	0.0094
NBP[1]1339*	0.0364	0.0019	0.6999	0.0128	0.0291	0.0095
NBP[1]1432*	0.0257	0.0013	0.5397	0.0099	0.0221	0.0072
NBP[1]1528*	0.0180	0.0009	0.4082	0.0075	0.0165	0.0054
NBP[1]1637*	0.0127	0.0007	0.3047	0.0056	0.0122	0.0040
NBP[1]1732*	0.0101	0.0005	0.2565	0.0047	0.0101	0.0033
NBP[1]1819*	0.0007	0.0000	0.0194	0.0004	0.0008	0.0002
NBP[1]1913*	0.0000	0.0000	0.0000	0.0000	0.0000	0.0000
Total	19.3189	1.0000	54.4778	1.0000	3.0595	1.0000

Aqueous Phase

Phase Fraction 0.0000

COMPONENTS	MOLAR FLOW (kgmole/h)	MOLE FRACTION	MASS FLOW (tonne/d)	MASS FRACTION	LIQUID VOLUME FLOW (m3/h)	LIQUID VOLUME FRACTION
Methane	0.0000	0.0000	0.0000	0.0000	0.0000	0.0000
Ethane	0.0000	0.0000	0.0000	0.0000	0.0000	0.0000
Propane	0.0000	0.0000	0.0000	0.0000	0.0000	0.0000
i-Butane	0.0000	0.0000	0.0000	0.0000	0.0000	0.0000
n-Butane	0.0000	0.0000	0.0000	0.0000	0.0000	0.0000
i-Pentane	0.0000	0.0000	0.0000	0.0000	0.0000	0.0000
n-Pentane	0.0000	0.0000	0.0000	0.0000	0.0000	0.0000
n-Hexane	0.0000	0.0000	0.0000	0.0000	0.0000	0.0000
Nitrogen	0.0000	0.0000	0.0000	0.0000	0.0000	0.0000
CO2	0.0000	0.0005	0.0000	0.0011	0.0000	0.0014
H2S	0.0000	0.0000	0.0000	0.0000	0.0000	0.0000
H2O	0.0000	0.9995	0.0000	0.9988	0.0000	0.9986
NBP[1]95*	0.0000	0.0000	0.0000	0.0000	0.0000	0.0000
NBP[1]121*	0.0000	0.0000	0.0000	0.0000	0.0000	0.0000
NBP[1]147*	0.0000	0.0000	0.0000	0.0000	0.0000	0.0000
NBP[1]171*	0.0000	0.0000	0.0000	0.0000	0.0000	0.0000
NBP[1]195*	0.0000	0.0000	0.0000	0.0000	0.0000	0.0000
NBP[1]222*	0.0000	0.0000	0.0000	0.0000	0.0000	0.0000
NBP[1]248*	0.0000	0.0000	0.0000	0.0000	0.0000	0.0000
NBP[1]273*	0.0000	0.0000	0.0000	0.0000	0.0000	0.0000
NBP[1]299*	0.0000	0.0000	0.0000	0.0000	0.0000	0.0000
NBP[1]325*	0.0000	0.0000	0.0000	0.0000	0.0000	0.0000
NBP[1]351*	0.0000	0.0000	0.0000	0.0000	0.0000	0.0000
NBP[1]377*	0.0000	0.0000	0.0000	0.0000	0.0000	0.0000
NBP[1]402*	0.0000	0.0000	0.0000	0.0000	0.0000	0.0000
NBP[1]428*	0.0000	0.0000	0.0000	0.0000	0.0000	0.0000
NBP[1]454*	0.0000	0.0000	0.0000	0.0000	0.0000	0.0000
NBP[1]480*	0.0000	0.0000	0.0000	0.0000	0.0000	0.0000
NBP[1]505*	0.0000	0.0000	0.0000	0.0000	0.0000	0.0000
NBP[1]531*	0.0000	0.0000	0.0000	0.0000	0.0000	0.0000
NBP[1]557*	0.0000	0.0000	0.0000	0.0000	0.0000	0.0000
NBP[1]582*	0.0000	0.0000	0.0000	0.0000	0.0000	0.0000
NBP[1]608*	0.0000	0.0000	0.0000	0.0000	0.0000	0.0000
NBP[1]634*	0.0000	0.0000	0.0000	0.0000	0.0000	0.0000
NBP[1]659*	0.0000	0.0000	0.0000	0.0000	0.0000	0.0000
NBP[1]685*	0.0000	0.0000	0.0000	0.0000	0.0000	0.0000
NBP[1]711*	0.0000	0.0000	0.0000	0.0000	0.0000	0.0000
NBP[1]736*	0.0000	0.0000	0.0000	0.0000	0.0000	0.0000
NBP[1]762*	0.0000	0.0000	0.0000	0.0000	0.0000	0.0000
NBP[1]788*	0.0000	0.0000	0.0000	0.0000	0.0000	0.0000

* Specified by user.

Material Stream: 9 (continued)

Fluid Package: Basis-1
Property Package: Peng-Robinson

COMPOSITION

Aqueous Phase (continued)

Phase Fraction 0.0000

COMPONENTS	MOLAR FLOW (kgmole/h)	MOLE FRACTION	MASS FLOW (tonne/d)	MASS FRACTION	LIQUID VOLUME FLOW (m3/h)	LIQUID VOLUME FRACTION
NBP[1]825*	0.0000	0.0000	0.0000	0.0000	0.0000	0.0000
NBP[1]873*	0.0000	0.0000	0.0000	0.0000	0.0000	0.0000
NBP[1]926*	0.0000	0.0000	0.0000	0.0000	0.0000	0.0000
NBP[1]978*	0.0000	0.0000	0.0000	0.0000	0.0000	0.0000
NBP[1]1021*	0.0000	0.0000	0.0000	0.0000	0.0000	0.0000
NBP[1]1075*	0.0000	0.0000	0.0000	0.0000	0.0000	0.0000
NBP[1]1123*	0.0000	0.0000	0.0000	0.0000	0.0000	0.0000
NBP[1]1173*	0.0000	0.0000	0.0000	0.0000	0.0000	0.0000
NBP[1]1250*	0.0000	0.0000	0.0000	0.0000	0.0000	0.0000
NBP[1]1339*	0.0000	0.0000	0.0000	0.0000	0.0000	0.0000
NBP[1]1432*	0.0000	0.0000	0.0000	0.0000	0.0000	0.0000
NBP[1]1528*	0.0000	0.0000	0.0000	0.0000	0.0000	0.0000
NBP[1]1637*	0.0000	0.0000	0.0000	0.0000	0.0000	0.0000
NBP[1]1732*	0.0000	0.0000	0.0000	0.0000	0.0000	0.0000
NBP[1]1819*	0.0000	0.0000	0.0000	0.0000	0.0000	0.0000
NBP[1]1913*	0.0000	0.0000	0.0000	0.0000	0.0000	0.0000
Total	0.0000	1.0000	0.0000	1.0000	0.0000	1.0000

Material Stream: 10

Fluid Package: Basis-1
Property Package: Peng-Robinson

CONDITIONS

		Overall	Vapour Phase	Liquid Phase	Liquid Phase
Vapour / Phase Fraction		0.3601	0.3601	0.0093	0.6306
Temperature:	(F)	76.03	76.03	76.03	76.03
Pressure:	(psig)	20.00 *	20.00	20.00	20.00
Molar Flow	(MMSCFD)	0.3879	0.1397	3.588e-003	0.2446
Mass Flow	(tonne/d)	54.48	5.480	2.899	46.10
Std Ideal Liq Vol Flow	(barrel/day)	461.8	77.53	18.27	366.0
Molar Enthalpy	(kJ/kgmole)	-2.700e+005	-1.057e+005	-1.450e+006	-3.464e+005
Molar Entropy	(kJ/kgmole-C)	224.0	181.0	1412	231.2
Heat Flow	(MMBtu/hr)	-4.943	-0.6972	-0.2456	-4.000
Liq Vol Flow @Std Cond	(barrel/day)	444.2 *	9819	18.49	361.1

PROPERTIES

		Overall	Vapour Phase	Liquid Phase	Liquid Phase
Molecular Weight		117.5	32.82	676.0	157.7
Molar Density	(kgmole/m3)	0.2646	9.871e-002	1.450	5.044
Mass Density	(kg/m3)	31.09	3.240	980.5	795.3
Act. Volume Flow	(barrel/day)	1.102e+004	1.064e+004	18.60	364.6
Mass Enthalpy	(kJ/kg)	-2298	-3222	-2145	-2197
Mass Entropy	(kJ/kg-C)	1.907	5.515	2.089	1.466
Heat Capacity	(kJ/kgmole-C)	226.6	58.23	1261	307.6
Mass Heat Capacity	(kJ/kg-C)	1.929	1.774	1.866	1.951
LHV Molar Basis (Std)	(Btu/SCF)	---	---	---	---
LHV Mass Basis (Std)	(kJ/kg)	---	---	---	---
Phase Fraction [Vol. Basis]		0.1679	0.1679	3.956e-002	0.7926
Phase Fraction [Mass Basis]		0.1006	0.1006	5.322e-002	0.8462
Partial Pressure of CO2	(psig)	-13.20	---	---	---
Cost Based on Flow	(Cost/s)	0.0000	0.0000	0.0000	0.0000
Act. Gas Flow	(ACT_m3/h)	70.48	70.48	---	---
Avg. Liq. Density	(kgmole/m3)	6.314	13.55	1.477	5.024
Specific Heat	(kJ/kgmole-C)	226.6	58.23	1261	307.6
Std. Gas Flow	(STD_m3/h)	456.8	164.5	4.225	288.1

* Specified by user.

Material Stream: 10 (continued)

Fluid Package: Basis-1
Property Package: Peng-Robinson

PROPERTIES

	Overall	Vapour Phase	Liquid Phase	Liquid Phase
Std. Ideal Liq. Mass Density (kg/m3)	741.9	444.5	998.2	792.1
Act. Liq. Flow (barrel/day)	383.2	---	18.60	364.6
Z Factor	---	0.9794	6.665e-002	1.917e-002
Watson K	12.04	15.53	11.93	11.91
User Property	---	---	---	---
Partial Pressure of H2S (psig)	-14.70	---	---	---
Cp/(Cp - R)	1.038	1.167	1.007	1.028
Cp/Cv	1.015	1.182	1.100	1.028
Heat of Vap. (kJ/kgmole)	2.517e+005	---	---	---
Kinematic Viscosity (cSt)	---	3.107	1.283e+004	1.842
Liq. Mass Density (Std. Cond) (kg/m3)	771.3	3.510	986.4	803.0
Liq. Vol. Flow (Std. Cond) (barrel/day)	444.2	9819	18.49	361.1
Liquid Fraction	0.6399	0.0000	1.000	1.000
Molar Volume (m3/kgmole)	3.780	10.13	0.6895	0.1982
Mass Heat of Vap. (kJ/kg)	2142	---	---	---
Phase Fraction [Molar Basis]	0.3601	0.3601	0.0093	0.6306
Surface Tension (dyne/cm)	---	---	26.06	21.47
Thermal Conductivity (W/m-K)	---	2.329e-002	0.1366	0.1125
Viscosity (cP)	---	1.007e-002	1.258e+004	1.465
Cv (Semi-Ideal) (kJ/kgmole-C)	218.3	49.92	1253	---
Mass Cv (Semi-Ideal) (kJ/kg-C)	1.858	1.521	1.854	---
Cv (kJ/kgmole-C)	223.3	49.26	1147	---
Mass Cv (kJ/kg-C)	1.901	1.501	1.697	---
Cv (Ent. Method) (kJ/kgmole-C)	---	---	1203	---
Mass Cv (Ent. Method) (kJ/kg-C)	---	---	1.779	---
Cp/Cv (Ent. Method)	---	---	1.049	---
Reid VP at 37.8 C (psig)	134.3	862.7	-6.278	4.691
True VP at 37.8 C (psig)	655.3	1393	25.40	27.54
Liq. Vol. Flow - Sum(Std. Cond) (barrel/day)	9837	9819	18.49	0.0000
HHV Molar Basis (Std) (Btu/SCF)	---	---	---	---
HHV Mass Basis (Std) (kJ/kg)	---	---	---	---
CO2 Loading	---	---	---	---
CO2 App ML Con (kgmole/m3)	---	---	2.588e-003	7.780e-003
CO2 App WT Con (kgmol/kg)	---	---	2.639e-006	9.782e-006
Phase Fraction [Act. Vol. Basis]	0.9652	0.9652	1.687e-003	3.308e-002
Mass Exergy (kJ/kg)	7.326	---	---	---
Viscosity Index	20.35	---	---	---
Ideal Gas Cp/Cv	1.047	1.169	1.008	1.035
Ideal Gas Cp (kJ/kgmole-C)	183.9	57.49	1043	243.6
Mass Ideal Gas Cp (kJ/kg-C)	1.566	1.752	1.543	1.545
Bubble Point Pressure (psig)	590.4	---	---	---

COMPOSITION

Overall Phase

Vapour Fraction 0.3601

COMPONENTS	MOLAR FLOW (kgmole/h)	MOLE FRACTION	MASS FLOW (tonne/d)	MASS FRACTION	LIQUID VOLUME FLOW (m3/h)	LIQUID VOLUME FRACTION
Methane	2.9394	0.1522	1.1318	0.0208	0.1575	0.0515
Ethane	1.4689	0.0760	1.0601	0.0195	0.1242	0.0406
Propane	1.9360	0.1002	2.0489	0.0376	0.1685	0.0551
i-Butane	0.4722	0.0244	0.6587	0.0121	0.0488	0.0160
n-Butane	1.1183	0.0579	1.5600	0.0286	0.1115	0.0364
i-Pentane	0.3834	0.0198	0.6638	0.0122	0.0444	0.0145
n-Pentane	0.4871	0.0252	0.8435	0.0155	0.0558	0.0182
n-Hexane	1.0636	0.0551	2.1999	0.0404	0.1383	0.0452
Nitrogen	0.0353	0.0018	0.0237	0.0004	0.0012	0.0004
CO2	0.3198	0.0166	0.3377	0.0062	0.0171	0.0056

* Specified by user.

Material Stream: 10 (continued)

Fluid Package: Basis-1
Property Package: Peng-Robinson

COMPOSITION

Overall Phase (continued)

Vapour Fraction 0.3601

COMPONENTS	MOLAR FLOW (kgmole/h)	MOLE FRACTION	MASS FLOW (tonne/d)	MASS FRACTION	LIQUID VOLUME FLOW (m3/h)	LIQUID VOLUME FRACTION
H2S	0.0000	0.0000	0.0000	0.0000	0.0000	0.0000
H2O	0.0154	0.0008	0.0066	0.0001	0.0003	0.0001
NBP[1]95*	0.1443	0.0075	0.2353	0.0043	0.0144	0.0047
NBP[1]121*	0.2015	0.0104	0.3522	0.0065	0.0213	0.0070
NBP[1]147*	0.2970	0.0154	0.5717	0.0105	0.0340	0.0111
NBP[1]171*	0.6296	0.0326	1.3247	0.0243	0.0775	0.0253
NBP[1]195*	0.8923	0.0462	2.0039	0.0368	0.1159	0.0379
NBP[1]222*	0.7104	0.0368	1.7157	0.0315	0.0981	0.0321
NBP[1]248*	0.6169	0.0319	1.6022	0.0294	0.0905	0.0296
NBP[1]273*	0.5109	0.0264	1.4190	0.0260	0.0792	0.0259
NBP[1]299*	0.4065	0.0210	1.2037	0.0221	0.0665	0.0217
NBP[1]325*	0.2977	0.0154	0.9365	0.0172	0.0512	0.0167
NBP[1]351*	0.2432	0.0126	0.8133	0.0149	0.0440	0.0144
NBP[1]377*	0.2235	0.0116	0.7969	0.0146	0.0427	0.0140
NBP[1]402*	0.2055	0.0106	0.7814	0.0143	0.0414	0.0135
NBP[1]428*	0.1958	0.0101	0.7942	0.0146	0.0417	0.0136
NBP[1]454*	0.1954	0.0101	0.8473	0.0156	0.0441	0.0144
NBP[1]480*	0.1981	0.0103	0.9177	0.0168	0.0473	0.0154
NBP[1]505*	0.1920	0.0099	0.9482	0.0174	0.0484	0.0158
NBP[1]531*	0.1852	0.0096	0.9739	0.0179	0.0492	0.0161
NBP[1]557*	0.1784	0.0092	0.9978	0.0183	0.0500	0.0163
NBP[1]582*	0.1706	0.0088	1.0132	0.0186	0.0503	0.0165
NBP[1]608*	0.1643	0.0085	1.0351	0.0190	0.0510	0.0167
NBP[1]634*	0.1611	0.0083	1.0753	0.0197	0.0526	0.0172
NBP[1]659*	0.1586	0.0082	1.1194	0.0205	0.0543	0.0177
NBP[1]685*	0.1641	0.0085	1.2227	0.0224	0.0588	0.0192
NBP[1]711*	0.1715	0.0089	1.3445	0.0247	0.0642	0.0210
NBP[1]736*	0.1697	0.0088	1.3915	0.0255	0.0659	0.0215
NBP[1]762*	0.1653	0.0086	1.4214	0.0261	0.0669	0.0219
NBP[1]788*	0.1585	0.0082	1.4424	0.0265	0.0674	0.0220
NBP[1]825*	0.2655	0.0137	2.5963	0.0477	0.1201	0.0393
NBP[1]873*	0.1830	0.0095	1.9404	0.0356	0.0887	0.0290
NBP[1]926*	0.1437	0.0074	1.6472	0.0302	0.0744	0.0243
NBP[1]978*	0.1474	0.0076	1.8524	0.0340	0.0825	0.0270
NBP[1]1021*	0.0728	0.0038	0.9655	0.0177	0.0426	0.0139
NBP[1]1075*	0.0449	0.0023	0.6310	0.0116	0.0276	0.0090
NBP[1]1123*	0.0417	0.0022	0.6267	0.0115	0.0271	0.0089
NBP[1]1173*	0.0300	0.0016	0.4772	0.0088	0.0205	0.0067
NBP[1]1250*	0.0393	0.0020	0.6767	0.0124	0.0287	0.0094
NBP[1]1339*	0.0364	0.0019	0.6999	0.0128	0.0291	0.0095
NBP[1]1432*	0.0257	0.0013	0.5397	0.0099	0.0221	0.0072
NBP[1]1528*	0.0180	0.0009	0.4082	0.0075	0.0165	0.0054
NBP[1]1637*	0.0127	0.0007	0.3047	0.0056	0.0122	0.0040
NBP[1]1732*	0.0101	0.0005	0.2565	0.0047	0.0101	0.0033
NBP[1]1819*	0.0007	0.0000	0.0194	0.0004	0.0008	0.0002
NBP[1]1913*	0.0000	0.0000	0.0000	0.0000	0.0000	0.0000
Total	19.3189	1.0000	54.4778	1.0000	3.0595	1.0000

Vapour Phase

Phase Fraction 0.3601

COMPONENTS	MOLAR FLOW (kgmole/h)	MOLE FRACTION	MASS FLOW (tonne/d)	MASS FRACTION	LIQUID VOLUME FLOW (m3/h)	LIQUID VOLUME FRACTION
Methane	2.8797	0.4139	1.1088	0.2023	0.1543	0.3004
Ethane	1.3204	0.1898	0.9529	0.1739	0.1116	0.2173
Propane	1.3760	0.1978	1.4563	0.2658	0.1198	0.2332

* Specified by user.

Material Stream: 10 (continued)

Fluid Package: Basis-1
Property Package: Peng-Robinson

COMPOSITION

Vapour Phase (continued)

Phase Fraction 0.3601

COMPONENTS	MOLAR FLOW (kgmole/h)	MOLE FRACTION	MASS FLOW (tonne/d)	MASS FRACTION	LIQUID VOLUME FLOW (m3/h)	LIQUID VOLUME FRACTION
i-Butane	0.2290	0.0329	0.3195	0.0583	0.0237	0.0461
n-Butane	0.4505	0.0648	0.6284	0.1147	0.0449	0.0874
i-Pentane	0.0790	0.0114	0.1368	0.0250	0.0091	0.0178
n-Pentane	0.0793	0.0114	0.1373	0.0251	0.0091	0.0177
n-Hexane	0.0582	0.0084	0.1204	0.0220	0.0076	0.0147
Nitrogen	0.0350	0.0050	0.0235	0.0043	0.0012	0.0024
CO2	0.3007	0.0432	0.3176	0.0580	0.0160	0.0312
H2S	0.0000	0.0000	0.0000	0.0000	0.0000	0.0000
H2O	0.0144	0.0021	0.0062	0.0011	0.0003	0.0005
NBP[1]95*	0.0246	0.0035	0.0400	0.0073	0.0025	0.0048
NBP[1]121*	0.0222	0.0032	0.0389	0.0071	0.0024	0.0046
NBP[1]147*	0.0203	0.0029	0.0391	0.0071	0.0023	0.0045
NBP[1]171*	0.0267	0.0038	0.0563	0.0103	0.0033	0.0064
NBP[1]195*	0.0230	0.0033	0.0516	0.0094	0.0030	0.0058
NBP[1]222*	0.0099	0.0014	0.0238	0.0043	0.0014	0.0027
NBP[1]248*	0.0047	0.0007	0.0121	0.0022	0.0007	0.0013
NBP[1]273*	0.0021	0.0003	0.0057	0.0010	0.0003	0.0006
NBP[1]299*	0.0009	0.0001	0.0025	0.0005	0.0001	0.0003
NBP[1]325*	0.0003	0.0000	0.0010	0.0002	0.0001	0.0001
NBP[1]351*	0.0001	0.0000	0.0004	0.0001	0.0000	0.0000
NBP[1]377*	0.0001	0.0000	0.0002	0.0000	0.0000	0.0000
NBP[1]402*	0.0000	0.0000	0.0001	0.0000	0.0000	0.0000
NBP[1]428*	0.0000	0.0000	0.0000	0.0000	0.0000	0.0000
NBP[1]454*	0.0000	0.0000	0.0000	0.0000	0.0000	0.0000
NBP[1]480*	0.0000	0.0000	0.0000	0.0000	0.0000	0.0000
NBP[1]505*	0.0000	0.0000	0.0000	0.0000	0.0000	0.0000
NBP[1]531*	0.0000	0.0000	0.0000	0.0000	0.0000	0.0000
NBP[1]557*	0.0000	0.0000	0.0000	0.0000	0.0000	0.0000
NBP[1]582*	0.0000	0.0000	0.0000	0.0000	0.0000	0.0000
NBP[1]608*	0.0000	0.0000	0.0000	0.0000	0.0000	0.0000
NBP[1]634*	0.0000	0.0000	0.0000	0.0000	0.0000	0.0000
NBP[1]659*	0.0000	0.0000	0.0000	0.0000	0.0000	0.0000
NBP[1]685*	0.0000	0.0000	0.0000	0.0000	0.0000	0.0000
NBP[1]711*	0.0000	0.0000	0.0000	0.0000	0.0000	0.0000
NBP[1]736*	0.0000	0.0000	0.0000	0.0000	0.0000	0.0000
NBP[1]762*	0.0000	0.0000	0.0000	0.0000	0.0000	0.0000
NBP[1]788*	0.0000	0.0000	0.0000	0.0000	0.0000	0.0000
NBP[1]825*	0.0000	0.0000	0.0000	0.0000	0.0000	0.0000
NBP[1]873*	0.0000	0.0000	0.0000	0.0000	0.0000	0.0000
NBP[1]926*	0.0000	0.0000	0.0000	0.0000	0.0000	0.0000
NBP[1]978*	0.0000	0.0000	0.0000	0.0000	0.0000	0.0000
NBP[1]1021*	0.0000	0.0000	0.0000	0.0000	0.0000	0.0000
NBP[1]1075*	0.0000	0.0000	0.0000	0.0000	0.0000	0.0000
NBP[1]1123*	0.0000	0.0000	0.0000	0.0000	0.0000	0.0000
NBP[1]1173*	0.0000	0.0000	0.0000	0.0000	0.0000	0.0000
NBP[1]1250*	0.0000	0.0000	0.0000	0.0000	0.0000	0.0000
NBP[1]1339*	0.0000	0.0000	0.0000	0.0000	0.0000	0.0000
NBP[1]1432*	0.0000	0.0000	0.0000	0.0000	0.0000	0.0000
NBP[1]1528*	0.0000	0.0000	0.0000	0.0000	0.0000	0.0000
NBP[1]1637*	0.0000	0.0000	0.0000	0.0000	0.0000	0.0000
NBP[1]1732*	0.0000	0.0000	0.0000	0.0000	0.0000	0.0000
NBP[1]1819*	0.0000	0.0000	0.0000	0.0000	0.0000	0.0000
NBP[1]1913*	0.0000	0.0000	0.0000	0.0000	0.0000	0.0000
Total	6.9572	1.0000	5.4797	1.0000	0.5136	1.0000

* Specified by user.

Material Stream: 10 (continued)

Fluid Package: Basis-1
Property Package: Peng-Robinson

COMPOSITION

Liquid Phase

Phase Fraction 9.250e-003

COMPONENTS	MOLAR FLOW (kgmole/h)	MOLE FRACTION	MASS FLOW (tonne/d)	MASS FRACTION	LIQUID VOLUME FLOW (m3/h)	LIQUID VOLUME FRACTION
Methane	0.0010	0.0055	0.0004	0.0001	0.0001	0.0004
Ethane	0.0015	0.0086	0.0011	0.0004	0.0001	0.0011
Propane	0.0044	0.0246	0.0047	0.0016	0.0004	0.0032
i-Butane	0.0017	0.0093	0.0023	0.0008	0.0002	0.0014
n-Butane	0.0041	0.0228	0.0057	0.0020	0.0004	0.0033
i-Pentane	0.0016	0.0092	0.0028	0.0010	0.0002	0.0016
n-Pentane	0.0020	0.0112	0.0035	0.0012	0.0002	0.0019
n-Hexane	0.0041	0.0232	0.0086	0.0030	0.0005	0.0045
Nitrogen	0.0000	0.0000	0.0000	0.0000	0.0000	0.0000
CO2	0.0003	0.0018	0.0003	0.0001	0.0000	0.0001
H2S	0.0000	0.0000	0.0000	0.0000	0.0000	0.0000
H2O	0.0000	0.0001	0.0000	0.0000	0.0000	0.0000
NBP[1]95*	0.0006	0.0032	0.0009	0.0003	0.0001	0.0005
NBP[1]121*	0.0008	0.0044	0.0014	0.0005	0.0001	0.0007
NBP[1]147*	0.0011	0.0061	0.0021	0.0007	0.0001	0.0010
NBP[1]171*	0.0022	0.0122	0.0046	0.0016	0.0003	0.0022
NBP[1]195*	0.0029	0.0162	0.0065	0.0022	0.0004	0.0031
NBP[1]222*	0.0022	0.0120	0.0052	0.0018	0.0003	0.0025
NBP[1]248*	0.0017	0.0097	0.0045	0.0016	0.0003	0.0021
NBP[1]273*	0.0013	0.0075	0.0037	0.0013	0.0002	0.0017
NBP[1]299*	0.0010	0.0056	0.0030	0.0010	0.0002	0.0013
NBP[1]325*	0.0007	0.0038	0.0021	0.0007	0.0001	0.0010
NBP[1]351*	0.0005	0.0029	0.0017	0.0006	0.0001	0.0008
NBP[1]377*	0.0004	0.0025	0.0016	0.0005	0.0001	0.0007
NBP[1]402*	0.0004	0.0021	0.0015	0.0005	0.0001	0.0006
NBP[1]428*	0.0003	0.0019	0.0014	0.0005	0.0001	0.0006
NBP[1]454*	0.0003	0.0018	0.0014	0.0005	0.0001	0.0006
NBP[1]480*	0.0003	0.0017	0.0014	0.0005	0.0001	0.0006
NBP[1]505*	0.0003	0.0015	0.0014	0.0005	0.0001	0.0006
NBP[1]531*	0.0003	0.0014	0.0013	0.0005	0.0001	0.0006
NBP[1]557*	0.0002	0.0013	0.0013	0.0004	0.0001	0.0005
NBP[1]582*	0.0002	0.0012	0.0013	0.0004	0.0001	0.0005
NBP[1]608*	0.0002	0.0011	0.0012	0.0004	0.0001	0.0005
NBP[1]634*	0.0002	0.0010	0.0012	0.0004	0.0001	0.0005
NBP[1]659*	0.0002	0.0010	0.0013	0.0004	0.0001	0.0005
NBP[1]685*	0.0002	0.0010	0.0013	0.0005	0.0001	0.0005
NBP[1]711*	0.0002	0.0010	0.0015	0.0005	0.0001	0.0006
NBP[1]736*	0.0002	0.0010	0.0015	0.0005	0.0001	0.0006
NBP[1]762*	0.0002	0.0010	0.0016	0.0006	0.0001	0.0006
NBP[1]788*	0.0002	0.0011	0.0017	0.0006	0.0001	0.0007
NBP[1]825*	0.0003	0.0020	0.0034	0.0012	0.0002	0.0013
NBP[1]873*	0.0003	0.0017	0.0032	0.0011	0.0001	0.0012
NBP[1]926*	0.0003	0.0019	0.0040	0.0014	0.0002	0.0015
NBP[1]978*	0.0005	0.0029	0.0066	0.0023	0.0003	0.0024
NBP[1]1021*	0.0005	0.0025	0.0060	0.0021	0.0003	0.0022
NBP[1]1075*	0.0007	0.0039	0.0099	0.0034	0.0004	0.0036
NBP[1]1123*	0.0016	0.0090	0.0241	0.0083	0.0010	0.0086
NBP[1]1173*	0.0039	0.0221	0.0628	0.0217	0.0027	0.0223
NBP[1]1250*	0.0272	0.1524	0.4689	0.1617	0.0199	0.1642
NBP[1]1339*	0.0360	0.2015	0.6929	0.2390	0.0288	0.2384
NBP[1]1432*	0.0257	0.1436	0.5397	0.1862	0.0221	0.1829
NBP[1]1528*	0.0180	0.1008	0.4082	0.1408	0.0165	0.1365
NBP[1]1637*	0.0127	0.0708	0.3047	0.1051	0.0122	0.1006
NBP[1]1732*	0.0101	0.0567	0.2565	0.0885	0.0101	0.0838

* Specified by user.

Material Stream: 10 (continued)

Fluid Package: Basis-1
Property Package: Peng-Robinson

COMPOSITION

Liquid Phase (continued)

Phase Fraction 9.250e-003

COMPONENTS	MOLAR FLOW (kgmole/h)	MOLE FRACTION	MASS FLOW (tonne/d)	MASS FRACTION	LIQUID VOLUME FLOW (m3/h)	LIQUID VOLUME FRACTION
NBP[1]1819*	0.0007	0.0041	0.0194	0.0067	0.0008	0.0063
NBP[1]1913*	0.0000	0.0000	0.0000	0.0000	0.0000	0.0000
Total	0.1787	1.0000	2.8993	1.0000	0.1210	1.0000

Liquid Phase

Phase Fraction 0.6306

COMPONENTS	MOLAR FLOW (kgmole/h)	MOLE FRACTION	MASS FLOW (tonne/d)	MASS FRACTION	LIQUID VOLUME FLOW (m3/h)	LIQUID VOLUME FRACTION
Methane	0.0587	0.0048	0.0226	0.0005	0.0031	0.0013
Ethane	0.1469	0.0121	0.1060	0.0023	0.0124	0.0051
Propane	0.5556	0.0456	0.5880	0.0128	0.0484	0.0199
i-Butane	0.2414	0.0198	0.3368	0.0073	0.0250	0.0103
n-Butane	0.6638	0.0545	0.9259	0.0201	0.0662	0.0273
i-Pentane	0.3027	0.0248	0.5242	0.0114	0.0350	0.0144
n-Pentane	0.4058	0.0333	0.7027	0.0152	0.0465	0.0192
n-Hexane	1.0013	0.0822	2.0709	0.0449	0.1302	0.0537
Nitrogen	0.0002	0.0000	0.0002	0.0000	0.0000	0.0000
CO2	0.0188	0.0015	0.0198	0.0004	0.0010	0.0004
H2S	0.0000	0.0000	0.0000	0.0000	0.0000	0.0000
H2O	0.0009	0.0001	0.0004	0.0000	0.0000	0.0000
NBP[1]95*	0.1192	0.0098	0.1943	0.0042	0.0119	0.0049
NBP[1]121*	0.1784	0.0146	0.3120	0.0068	0.0189	0.0078
NBP[1]147*	0.2756	0.0226	0.5304	0.0115	0.0315	0.0130
NBP[1]171*	0.6006	0.0493	1.2639	0.0274	0.0740	0.0305
NBP[1]195*	0.8664	0.0711	1.9458	0.0422	0.1126	0.0464
NBP[1]222*	0.6983	0.0573	1.6867	0.0366	0.0964	0.0398
NBP[1]248*	0.6105	0.0501	1.5856	0.0344	0.0895	0.0369
NBP[1]273*	0.5075	0.0417	1.4096	0.0306	0.0787	0.0325
NBP[1]299*	0.4046	0.0332	1.1982	0.0260	0.0662	0.0273
NBP[1]325*	0.2967	0.0244	0.9333	0.0202	0.0510	0.0210
NBP[1]351*	0.2425	0.0199	0.8111	0.0176	0.0439	0.0181
NBP[1]377*	0.2230	0.0183	0.7952	0.0172	0.0426	0.0176
NBP[1]402*	0.2051	0.0168	0.7799	0.0169	0.0414	0.0171
NBP[1]428*	0.1954	0.0160	0.7928	0.0172	0.0416	0.0172
NBP[1]454*	0.1951	0.0160	0.8459	0.0183	0.0440	0.0181
NBP[1]480*	0.1978	0.0162	0.9163	0.0199	0.0472	0.0195
NBP[1]505*	0.1917	0.0157	0.9468	0.0205	0.0483	0.0199
NBP[1]531*	0.1850	0.0152	0.9726	0.0211	0.0492	0.0203
NBP[1]557*	0.1782	0.0146	0.9965	0.0216	0.0499	0.0206
NBP[1]582*	0.1704	0.0140	1.0119	0.0220	0.0503	0.0207
NBP[1]608*	0.1641	0.0135	1.0338	0.0224	0.0509	0.0210
NBP[1]634*	0.1609	0.0132	1.0741	0.0233	0.0525	0.0216
NBP[1]659*	0.1584	0.0130	1.1182	0.0243	0.0542	0.0224
NBP[1]685*	0.1639	0.0135	1.2214	0.0265	0.0588	0.0242
NBP[1]711*	0.1714	0.0141	1.3430	0.0291	0.0641	0.0264
NBP[1]736*	0.1696	0.0139	1.3900	0.0302	0.0659	0.0272
NBP[1]762*	0.1651	0.0136	1.4198	0.0308	0.0668	0.0275
NBP[1]788*	0.1583	0.0130	1.4407	0.0313	0.0673	0.0278
NBP[1]825*	0.2651	0.0218	2.5929	0.0562	0.1200	0.0495
NBP[1]873*	0.1827	0.0150	1.9372	0.0420	0.0886	0.0365
NBP[1]926*	0.1434	0.0118	1.6432	0.0356	0.0743	0.0306
NBP[1]978*	0.1468	0.0121	1.8459	0.0400	0.0822	0.0339
NBP[1]1021*	0.0724	0.0059	0.9595	0.0208	0.0424	0.0175
NBP[1]1075*	0.0442	0.0036	0.6211	0.0135	0.0272	0.0112
NBP[1]1123*	0.0401	0.0033	0.6026	0.0131	0.0261	0.0108

* Specified by user.

Material Stream: 10 (continued)

Fluid Package: Basis-1
Property Package: Peng-Robinson

COMPOSITION

Liquid Phase (continued)

Phase Fraction 0.6306

COMPONENTS	MOLAR FLOW (kgmole/h)	MOLE FRACTION	MASS FLOW (tonne/d)	MASS FRACTION	LIQUID VOLUME FLOW (m3/h)	LIQUID VOLUME FRACTION
NBP[1]1173*	0.0261	0.0021	0.4144	0.0090	0.0178	0.0073
NBP[1]1250*	0.0121	0.0010	0.2078	0.0045	0.0088	0.0036
NBP[1]1339*	0.0004	0.0000	0.0071	0.0002	0.0003	0.0001
NBP[1]1432*	0.0000	0.0000	0.0000	0.0000	0.0000	0.0000
NBP[1]1528*	0.0000	0.0000	0.0000	0.0000	0.0000	0.0000
NBP[1]1637*	0.0000	0.0000	0.0000	0.0000	0.0000	0.0000
NBP[1]1732*	0.0000	0.0000	0.0000	0.0000	0.0000	0.0000
NBP[1]1819*	0.0000	0.0000	0.0000	0.0000	0.0000	0.0000
NBP[1]1913*	0.0000	0.0000	0.0000	0.0000	0.0000	0.0000
Total	12.1830	1.0000	46.0988	1.0000	2.4249	1.0000

Material Stream: 11

Fluid Package: Basis-1
Property Package: Peng-Robinson

CONDITIONS

		Overall	Vapour Phase	Liquid Phase	Liquid Phase
Vapour / Phase Fraction		1.0000	1.0000	0.0000	0.0000
Temperature:	(F)	76.03	76.03	76.03	76.03
Pressure:	(psig)	20.00	20.00	20.00	20.00
Molar Flow	(MMSCFD)	0.1397	0.1397	0.0000	0.0000
Mass Flow	(tonne/d)	5.480	5.480	0.0000	0.0000
Std Ideal Liq Vol Flow	(barrel/day)	77.53	77.53	0.0000	0.0000
Molar Enthalpy	(kJ/kgmole)	-1.057e+005	-1.057e+005	-1.450e+006	-3.464e+005
Molar Entropy	(kJ/kgmole-C)	181.0	181.0	1412	231.2
Heat Flow	(MMBtu/hr)	-0.6972	-0.6972	0.0000	0.0000
Liq Vol Flow @Std Cond	(barrel/day)	9819 *	9819	0.0000	0.0000

PROPERTIES

		Overall	Vapour Phase	Liquid Phase	Liquid Phase
Molecular Weight		32.82	32.82	676.0	157.7
Molar Density	(kgmole/m3)	9.871e-002	9.871e-002	1.450	5.044
Mass Density	(kg/m3)	3.240	3.240	980.5	795.3
Act. Volume Flow	(barrel/day)	1.064e+004	1.064e+004	0.0000	0.0000
Mass Enthalpy	(kJ/kg)	-3222	-3222	-2145	-2197
Mass Entropy	(kJ/kg-C)	5.515	5.515	2.089	1.466
Heat Capacity	(kJ/kgmole-C)	58.23	58.23	1261	307.6
Mass Heat Capacity	(kJ/kg-C)	1.774	1.774	1.866	1.951
LHV Molar Basis (Std)	(Btu/SCF)	---	---	---	---
LHV Mass Basis (Std)	(kJ/kg)	---	---	---	---
Phase Fraction [Vol. Basis]		1.000	1.000	---	---
Phase Fraction [Mass Basis]		1.000	1.000	0.0000	0.0000
Partial Pressure of CO2	(psig)	-13.20	---	---	---
Cost Based on Flow	(Cost/s)	0.0000	0.0000	0.0000	0.0000
Act. Gas Flow	(ACT_m3/h)	70.48	70.48	---	---
Avg. Liq. Density	(kgmole/m3)	13.55	13.55	1.477	5.024
Specific Heat	(kJ/kgmole-C)	58.23	58.23	1261	307.6
Std. Gas Flow	(STD_m3/h)	164.5	164.5	0.0000	0.0000
Std. Ideal Liq. Mass Density	(kg/m3)	444.5	444.5	998.2	792.1
Act. Liq. Flow	(barrel/day)	0.0000	---	---	0.0000
Z Factor		---	0.9794	6.665e-002	1.917e-002
Watson K		15.53	15.53	11.93	11.91
User Property		---	---	---	---
Partial Pressure of H2S	(psig)	-14.70	---	---	---
Cp/(Cp - R)		1.167	1.167	1.007	1.028

* Specified by user.

Material Stream: 11 (continued)

Fluid Package: Basis-1
Property Package: Peng-Robinson

PROPERTIES

	Overall	Vapour Phase	Liquid Phase	Liquid Phase
Cp/Cv	1.182	1.182	1.100	1.028
Heat of Vap. (kJ/kgmole)	2.373e+004	---	---	---
Kinematic Viscosity (cSt)	3.107	3.107	1.283e+004	1.842
Liq. Mass Density (Std. Cond) (kg/m3)	3.510	3.510	986.4	803.0
Liq. Vol. Flow (Std. Cond) (barrel/day)	9819	9819	0.0000	0.0000
Liquid Fraction	0.0000	0.0000	1.000	1.000
Molar Volume (m3/kgmole)	10.13	10.13	0.6895	0.1982
Mass Heat of Vap. (kJ/kg)	723.2	---	---	---
Phase Fraction [Molar Basis]	1.0000	1.0000	0.0000	0.0000
Surface Tension (dyne/cm)	---	---	26.06	21.47
Thermal Conductivity (W/m-K)	2.329e-002	2.329e-002	0.1366	0.1125
Viscosity (cP)	1.007e-002	1.007e-002	1.258e+004	1.465
Cv (Semi-Ideal) (kJ/kgmole-C)	49.92	49.92	1253	---
Mass Cv (Semi-Ideal) (kJ/kg-C)	1.521	1.521	1.854	---
Cv (kJ/kgmole-C)	49.26	49.26	1147	---
Mass Cv (kJ/kg-C)	1.501	1.501	1.697	---
Cv (Ent. Method) (kJ/kgmole-C)	---	---	1204	---
Mass Cv (Ent. Method) (kJ/kg-C)	---	---	1.781	---
Cp/Cv (Ent. Method)	---	---	1.047	---
Reid VP at 37.8 C (psig)	862.7	862.7	-6.278	4.691
True VP at 37.8 C (psig)	1393	1393	25.40	27.54
Liq. Vol. Flow - Sum(Std. Cond) (barrel/day)	9819	9819	0.0000	0.0000
HHV Molar Basis (Std) (Btu/SCF)	---	---	---	---
HHV Mass Basis (Std) (kJ/kg)	---	---	---	---
CO2 Loading	---	---	---	---
CO2 App ML Con (kgmole/m3)	---	---	---	---
CO2 App WT Con (kgmol/kg)	---	---	---	---
Phase Fraction [Act. Vol. Basis]	1.000	1.000	0.0000	0.0000
Mass Exergy (kJ/kg)	64.00	---	---	---
Viscosity Index	-2.849	---	---	---
Ideal Gas Cp/Cv	1.169	1.169	1.008	1.035
Ideal Gas Cp (kJ/kgmole-C)	57.49	57.49	1043	243.6
Mass Ideal Gas Cp (kJ/kg-C)	1.752	1.752	1.543	1.545
Bubble Point Pressure (psig)	1309	---	---	---

COMPOSITION

Overall Phase

Vapour Fraction 1.0000

COMPONENTS	MOLAR FLOW (kgmole/h)	MOLE FRACTION	MASS FLOW (tonne/d)	MASS FRACTION	LIQUID VOLUME FLOW (m3/h)	LIQUID VOLUME FRACTION
Methane	2.8797	0.4139	1.1088	0.2023	0.1543	0.3004
Ethane	1.3204	0.1898	0.9529	0.1739	0.1116	0.2173
Propane	1.3760	0.1978	1.4563	0.2658	0.1198	0.2332
i-Butane	0.2290	0.0329	0.3195	0.0583	0.0237	0.0461
n-Butane	0.4505	0.0648	0.6284	0.1147	0.0449	0.0874
i-Pentane	0.0790	0.0114	0.1368	0.0250	0.0091	0.0178
n-Pentane	0.0793	0.0114	0.1373	0.0251	0.0091	0.0177
n-Hexane	0.0582	0.0084	0.1204	0.0220	0.0076	0.0147
Nitrogen	0.0350	0.0050	0.0235	0.0043	0.0012	0.0024
CO2	0.3007	0.0432	0.3176	0.0580	0.0160	0.0312
H2S	0.0000	0.0000	0.0000	0.0000	0.0000	0.0000
H2O	0.0144	0.0021	0.0062	0.0011	0.0003	0.0005
NBP[1]95*	0.0246	0.0035	0.0400	0.0073	0.0025	0.0048
NBP[1]121*	0.0222	0.0032	0.0389	0.0071	0.0024	0.0046
NBP[1]147*	0.0203	0.0029	0.0391	0.0071	0.0023	0.0045
NBP[1]171*	0.0267	0.0038	0.0563	0.0103	0.0033	0.0064
NBP[1]195*	0.0230	0.0033	0.0516	0.0094	0.0030	0.0058

* Specified by user.

Material Stream: 11 (continued)

Fluid Package: Basis-1
Property Package: Peng-Robinson

COMPOSITION

Overall Phase (continued)

Vapour Fraction 1.0000

COMPONENTS	MOLAR FLOW (kgmole/h)	MOLE FRACTION	MASS FLOW (tonne/d)	MASS FRACTION	LIQUID VOLUME FLOW (m3/h)	LIQUID VOLUME FRACTION
NBP[1]222*	0.0099	0.0014	0.0238	0.0043	0.0014	0.0027
NBP[1]248*	0.0047	0.0007	0.0121	0.0022	0.0007	0.0013
NBP[1]273*	0.0021	0.0003	0.0057	0.0010	0.0003	0.0006
NBP[1]299*	0.0009	0.0001	0.0025	0.0005	0.0001	0.0003
NBP[1]325*	0.0003	0.0000	0.0010	0.0002	0.0001	0.0001
NBP[1]351*	0.0001	0.0000	0.0004	0.0001	0.0000	0.0000
NBP[1]377*	0.0001	0.0000	0.0002	0.0000	0.0000	0.0000
NBP[1]402*	0.0000	0.0000	0.0001	0.0000	0.0000	0.0000
NBP[1]428*	0.0000	0.0000	0.0000	0.0000	0.0000	0.0000
NBP[1]454*	0.0000	0.0000	0.0000	0.0000	0.0000	0.0000
NBP[1]480*	0.0000	0.0000	0.0000	0.0000	0.0000	0.0000
NBP[1]505*	0.0000	0.0000	0.0000	0.0000	0.0000	0.0000
NBP[1]531*	0.0000	0.0000	0.0000	0.0000	0.0000	0.0000
NBP[1]557*	0.0000	0.0000	0.0000	0.0000	0.0000	0.0000
NBP[1]582*	0.0000	0.0000	0.0000	0.0000	0.0000	0.0000
NBP[1]608*	0.0000	0.0000	0.0000	0.0000	0.0000	0.0000
NBP[1]634*	0.0000	0.0000	0.0000	0.0000	0.0000	0.0000
NBP[1]659*	0.0000	0.0000	0.0000	0.0000	0.0000	0.0000
NBP[1]685*	0.0000	0.0000	0.0000	0.0000	0.0000	0.0000
NBP[1]711*	0.0000	0.0000	0.0000	0.0000	0.0000	0.0000
NBP[1]736*	0.0000	0.0000	0.0000	0.0000	0.0000	0.0000
NBP[1]762*	0.0000	0.0000	0.0000	0.0000	0.0000	0.0000
NBP[1]788*	0.0000	0.0000	0.0000	0.0000	0.0000	0.0000
NBP[1]825*	0.0000	0.0000	0.0000	0.0000	0.0000	0.0000
NBP[1]873*	0.0000	0.0000	0.0000	0.0000	0.0000	0.0000
NBP[1]926*	0.0000	0.0000	0.0000	0.0000	0.0000	0.0000
NBP[1]978*	0.0000	0.0000	0.0000	0.0000	0.0000	0.0000
NBP[1]1021*	0.0000	0.0000	0.0000	0.0000	0.0000	0.0000
NBP[1]1075*	0.0000	0.0000	0.0000	0.0000	0.0000	0.0000
NBP[1]1123*	0.0000	0.0000	0.0000	0.0000	0.0000	0.0000
NBP[1]1173*	0.0000	0.0000	0.0000	0.0000	0.0000	0.0000
NBP[1]1250*	0.0000	0.0000	0.0000	0.0000	0.0000	0.0000
NBP[1]1339*	0.0000	0.0000	0.0000	0.0000	0.0000	0.0000
NBP[1]1432*	0.0000	0.0000	0.0000	0.0000	0.0000	0.0000
NBP[1]1528*	0.0000	0.0000	0.0000	0.0000	0.0000	0.0000
NBP[1]1637*	0.0000	0.0000	0.0000	0.0000	0.0000	0.0000
NBP[1]1732*	0.0000	0.0000	0.0000	0.0000	0.0000	0.0000
NBP[1]1819*	0.0000	0.0000	0.0000	0.0000	0.0000	0.0000
NBP[1]1913*	0.0000	0.0000	0.0000	0.0000	0.0000	0.0000
Total	6.9572	1.0000	5.4797	1.0000	0.5136	1.0000

Vapour Phase

Phase Fraction 1.000

COMPONENTS	MOLAR FLOW (kgmole/h)	MOLE FRACTION	MASS FLOW (tonne/d)	MASS FRACTION	LIQUID VOLUME FLOW (m3/h)	LIQUID VOLUME FRACTION
Methane	2.8797	0.4139	1.1088	0.2023	0.1543	0.3004
Ethane	1.3204	0.1898	0.9529	0.1739	0.1116	0.2173
Propane	1.3760	0.1978	1.4563	0.2658	0.1198	0.2332
i-Butane	0.2290	0.0329	0.3195	0.0583	0.0237	0.0461
n-Butane	0.4505	0.0648	0.6284	0.1147	0.0449	0.0874
i-Pentane	0.0790	0.0114	0.1368	0.0250	0.0091	0.0178
n-Pentane	0.0793	0.0114	0.1373	0.0251	0.0091	0.0177
n-Hexane	0.0582	0.0084	0.1204	0.0220	0.0076	0.0147
Nitrogen	0.0350	0.0050	0.0235	0.0043	0.0012	0.0024
CO2	0.3007	0.0432	0.3176	0.0580	0.0160	0.0312

* Specified by user.

Material Stream: 11 (continued)

Fluid Package: Basis-1
Property Package: Peng-Robinson

COMPOSITION

Vapour Phase (continued)

Phase Fraction 1.000

COMPONENTS	MOLAR FLOW (kgmole/h)	MOLE FRACTION	MASS FLOW (tonne/d)	MASS FRACTION	LIQUID VOLUME FLOW (m3/h)	LIQUID VOLUME FRACTION
H2S	0.0000	0.0000	0.0000	0.0000	0.0000	0.0000
H2O	0.0144	0.0021	0.0062	0.0011	0.0003	0.0005
NBP[1]95*	0.0246	0.0035	0.0400	0.0073	0.0025	0.0048
NBP[1]121*	0.0222	0.0032	0.0389	0.0071	0.0024	0.0046
NBP[1]147*	0.0203	0.0029	0.0391	0.0071	0.0023	0.0045
NBP[1]171*	0.0267	0.0038	0.0563	0.0103	0.0033	0.0064
NBP[1]195*	0.0230	0.0033	0.0516	0.0094	0.0030	0.0058
NBP[1]222*	0.0099	0.0014	0.0238	0.0043	0.0014	0.0027
NBP[1]248*	0.0047	0.0007	0.0121	0.0022	0.0007	0.0013
NBP[1]273*	0.0021	0.0003	0.0057	0.0010	0.0003	0.0006
NBP[1]299*	0.0009	0.0001	0.0025	0.0005	0.0001	0.0003
NBP[1]325*	0.0003	0.0000	0.0010	0.0002	0.0001	0.0001
NBP[1]351*	0.0001	0.0000	0.0004	0.0001	0.0000	0.0000
NBP[1]377*	0.0001	0.0000	0.0002	0.0000	0.0000	0.0000
NBP[1]402*	0.0000	0.0000	0.0001	0.0000	0.0000	0.0000
NBP[1]428*	0.0000	0.0000	0.0000	0.0000	0.0000	0.0000
NBP[1]454*	0.0000	0.0000	0.0000	0.0000	0.0000	0.0000
NBP[1]480*	0.0000	0.0000	0.0000	0.0000	0.0000	0.0000
NBP[1]505*	0.0000	0.0000	0.0000	0.0000	0.0000	0.0000
NBP[1]531*	0.0000	0.0000	0.0000	0.0000	0.0000	0.0000
NBP[1]557*	0.0000	0.0000	0.0000	0.0000	0.0000	0.0000
NBP[1]582*	0.0000	0.0000	0.0000	0.0000	0.0000	0.0000
NBP[1]608*	0.0000	0.0000	0.0000	0.0000	0.0000	0.0000
NBP[1]634*	0.0000	0.0000	0.0000	0.0000	0.0000	0.0000
NBP[1]659*	0.0000	0.0000	0.0000	0.0000	0.0000	0.0000
NBP[1]685*	0.0000	0.0000	0.0000	0.0000	0.0000	0.0000
NBP[1]711*	0.0000	0.0000	0.0000	0.0000	0.0000	0.0000
NBP[1]736*	0.0000	0.0000	0.0000	0.0000	0.0000	0.0000
NBP[1]762*	0.0000	0.0000	0.0000	0.0000	0.0000	0.0000
NBP[1]788*	0.0000	0.0000	0.0000	0.0000	0.0000	0.0000
NBP[1]825*	0.0000	0.0000	0.0000	0.0000	0.0000	0.0000
NBP[1]873*	0.0000	0.0000	0.0000	0.0000	0.0000	0.0000
NBP[1]926*	0.0000	0.0000	0.0000	0.0000	0.0000	0.0000
NBP[1]978*	0.0000	0.0000	0.0000	0.0000	0.0000	0.0000
NBP[1]1021*	0.0000	0.0000	0.0000	0.0000	0.0000	0.0000
NBP[1]1075*	0.0000	0.0000	0.0000	0.0000	0.0000	0.0000
NBP[1]1123*	0.0000	0.0000	0.0000	0.0000	0.0000	0.0000
NBP[1]1173*	0.0000	0.0000	0.0000	0.0000	0.0000	0.0000
NBP[1]1250*	0.0000	0.0000	0.0000	0.0000	0.0000	0.0000
NBP[1]1339*	0.0000	0.0000	0.0000	0.0000	0.0000	0.0000
NBP[1]1432*	0.0000	0.0000	0.0000	0.0000	0.0000	0.0000
NBP[1]1528*	0.0000	0.0000	0.0000	0.0000	0.0000	0.0000
NBP[1]1637*	0.0000	0.0000	0.0000	0.0000	0.0000	0.0000
NBP[1]1732*	0.0000	0.0000	0.0000	0.0000	0.0000	0.0000
NBP[1]1819*	0.0000	0.0000	0.0000	0.0000	0.0000	0.0000
NBP[1]1913*	0.0000	0.0000	0.0000	0.0000	0.0000	0.0000
Total	6.9572	1.0000	5.4797	1.0000	0.5136	1.0000

Liquid Phase

Phase Fraction 0.0000

COMPONENTS	MOLAR FLOW (kgmole/h)	MOLE FRACTION	MASS FLOW (tonne/d)	MASS FRACTION	LIQUID VOLUME FLOW (m3/h)	LIQUID VOLUME FRACTION
Methane	0.0000	0.0055	0.0000	0.0001	0.0000	0.0004
Ethane	0.0000	0.0086	0.0000	0.0004	0.0000	0.0011
Propane	0.0000	0.0246	0.0000	0.0016	0.0000	0.0032

* Specified by user.

Material Stream: 11 (continued)

Fluid Package: Basis-1
Property Package: Peng-Robinson

COMPOSITION

Liquid Phase (continued)

Phase Fraction 0.0000

COMPONENTS	MOLAR FLOW (kgmole/h)	MOLE FRACTION	MASS FLOW (tonne/d)	MASS FRACTION	LIQUID VOLUME FLOW (m3/h)	LIQUID VOLUME FRACTION
i-Butane	0.0000	0.0093	0.0000	0.0008	0.0000	0.0014
n-Butane	0.0000	0.0228	0.0000	0.0020	0.0000	0.0033
i-Pentane	0.0000	0.0092	0.0000	0.0010	0.0000	0.0016
n-Pentane	0.0000	0.0112	0.0000	0.0012	0.0000	0.0019
n-Hexane	0.0000	0.0232	0.0000	0.0030	0.0000	0.0045
Nitrogen	0.0000	0.0000	0.0000	0.0000	0.0000	0.0000
CO2	0.0000	0.0018	0.0000	0.0001	0.0000	0.0001
H2S	0.0000	0.0000	0.0000	0.0000	0.0000	0.0000
H2O	0.0000	0.0001	0.0000	0.0000	0.0000	0.0000
NBP[1]95*	0.0000	0.0032	0.0000	0.0003	0.0000	0.0005
NBP[1]121*	0.0000	0.0044	0.0000	0.0005	0.0000	0.0007
NBP[1]147*	0.0000	0.0061	0.0000	0.0007	0.0000	0.0010
NBP[1]171*	0.0000	0.0122	0.0000	0.0016	0.0000	0.0022
NBP[1]195*	0.0000	0.0162	0.0000	0.0022	0.0000	0.0031
NBP[1]222*	0.0000	0.0120	0.0000	0.0018	0.0000	0.0025
NBP[1]248*	0.0000	0.0097	0.0000	0.0016	0.0000	0.0021
NBP[1]273*	0.0000	0.0075	0.0000	0.0013	0.0000	0.0017
NBP[1]299*	0.0000	0.0056	0.0000	0.0010	0.0000	0.0013
NBP[1]325*	0.0000	0.0038	0.0000	0.0007	0.0000	0.0010
NBP[1]351*	0.0000	0.0029	0.0000	0.0006	0.0000	0.0008
NBP[1]377*	0.0000	0.0025	0.0000	0.0005	0.0000	0.0007
NBP[1]402*	0.0000	0.0021	0.0000	0.0005	0.0000	0.0006
NBP[1]428*	0.0000	0.0019	0.0000	0.0005	0.0000	0.0006
NBP[1]454*	0.0000	0.0018	0.0000	0.0005	0.0000	0.0006
NBP[1]480*	0.0000	0.0017	0.0000	0.0005	0.0000	0.0006
NBP[1]505*	0.0000	0.0015	0.0000	0.0005	0.0000	0.0006
NBP[1]531*	0.0000	0.0014	0.0000	0.0005	0.0000	0.0006
NBP[1]557*	0.0000	0.0013	0.0000	0.0004	0.0000	0.0005
NBP[1]582*	0.0000	0.0012	0.0000	0.0004	0.0000	0.0005
NBP[1]608*	0.0000	0.0011	0.0000	0.0004	0.0000	0.0005
NBP[1]634*	0.0000	0.0010	0.0000	0.0004	0.0000	0.0005
NBP[1]659*	0.0000	0.0010	0.0000	0.0004	0.0000	0.0005
NBP[1]685*	0.0000	0.0010	0.0000	0.0005	0.0000	0.0005
NBP[1]711*	0.0000	0.0010	0.0000	0.0005	0.0000	0.0006
NBP[1]736*	0.0000	0.0010	0.0000	0.0005	0.0000	0.0006
NBP[1]762*	0.0000	0.0010	0.0000	0.0006	0.0000	0.0006
NBP[1]788*	0.0000	0.0011	0.0000	0.0006	0.0000	0.0007
NBP[1]825*	0.0000	0.0020	0.0000	0.0012	0.0000	0.0013
NBP[1]873*	0.0000	0.0017	0.0000	0.0011	0.0000	0.0012
NBP[1]926*	0.0000	0.0019	0.0000	0.0014	0.0000	0.0015
NBP[1]978*	0.0000	0.0029	0.0000	0.0023	0.0000	0.0024
NBP[1]1021*	0.0000	0.0025	0.0000	0.0021	0.0000	0.0022
NBP[1]1075*	0.0000	0.0039	0.0000	0.0034	0.0000	0.0036
NBP[1]1123*	0.0000	0.0090	0.0000	0.0083	0.0000	0.0086
NBP[1]1173*	0.0000	0.0221	0.0000	0.0217	0.0000	0.0223
NBP[1]1250*	0.0000	0.1524	0.0000	0.1617	0.0000	0.1642
NBP[1]1339*	0.0000	0.2015	0.0000	0.2390	0.0000	0.2384
NBP[1]1432*	0.0000	0.1436	0.0000	0.1862	0.0000	0.1829
NBP[1]1528*	0.0000	0.1008	0.0000	0.1408	0.0000	0.1365
NBP[1]1637*	0.0000	0.0708	0.0000	0.1051	0.0000	0.1006
NBP[1]1732*	0.0000	0.0567	0.0000	0.0885	0.0000	0.0838
NBP[1]1819*	0.0000	0.0041	0.0000	0.0067	0.0000	0.0063
NBP[1]1913*	0.0000	0.0000	0.0000	0.0000	0.0000	0.0000
Total	0.0000	1.0000	0.0000	1.0000	0.0000	1.0000

* Specified by user.

Material Stream: 11 (continued)

Fluid Package: Basis-1
Property Package: Peng-Robinson

COMPOSITION

Liquid Phase

Phase Fraction 0.0000

COMPONENTS	MOLAR FLOW (kgmole/h)	MOLE FRACTION	MASS FLOW (tonne/d)	MASS FRACTION	LIQUID VOLUME FLOW (m3/h)	LIQUID VOLUME FRACTION
Methane	0.0000	0.0048	0.0000	0.0005	0.0000	0.0013
Ethane	0.0000	0.0121	0.0000	0.0023	0.0000	0.0051
Propane	0.0000	0.0456	0.0000	0.0128	0.0000	0.0199
i-Butane	0.0000	0.0198	0.0000	0.0073	0.0000	0.0103
n-Butane	0.0000	0.0545	0.0000	0.0201	0.0000	0.0273
i-Pentane	0.0000	0.0248	0.0000	0.0114	0.0000	0.0144
n-Pentane	0.0000	0.0333	0.0000	0.0152	0.0000	0.0192
n-Hexane	0.0000	0.0822	0.0000	0.0449	0.0000	0.0537
Nitrogen	0.0000	0.0000	0.0000	0.0000	0.0000	0.0000
CO2	0.0000	0.0015	0.0000	0.0004	0.0000	0.0004
H2S	0.0000	0.0000	0.0000	0.0000	0.0000	0.0000
H2O	0.0000	0.0001	0.0000	0.0000	0.0000	0.0000
NBP[1]95*	0.0000	0.0098	0.0000	0.0042	0.0000	0.0049
NBP[1]121*	0.0000	0.0146	0.0000	0.0068	0.0000	0.0078
NBP[1]147*	0.0000	0.0226	0.0000	0.0115	0.0000	0.0130
NBP[1]171*	0.0000	0.0493	0.0000	0.0274	0.0000	0.0305
NBP[1]195*	0.0000	0.0711	0.0000	0.0422	0.0000	0.0464
NBP[1]222*	0.0000	0.0573	0.0000	0.0366	0.0000	0.0398
NBP[1]248*	0.0000	0.0501	0.0000	0.0344	0.0000	0.0369
NBP[1]273*	0.0000	0.0417	0.0000	0.0306	0.0000	0.0325
NBP[1]299*	0.0000	0.0332	0.0000	0.0260	0.0000	0.0273
NBP[1]325*	0.0000	0.0244	0.0000	0.0202	0.0000	0.0210
NBP[1]351*	0.0000	0.0199	0.0000	0.0176	0.0000	0.0181
NBP[1]377*	0.0000	0.0183	0.0000	0.0172	0.0000	0.0176
NBP[1]402*	0.0000	0.0168	0.0000	0.0169	0.0000	0.0171
NBP[1]428*	0.0000	0.0160	0.0000	0.0172	0.0000	0.0172
NBP[1]454*	0.0000	0.0160	0.0000	0.0183	0.0000	0.0181
NBP[1]480*	0.0000	0.0162	0.0000	0.0199	0.0000	0.0195
NBP[1]505*	0.0000	0.0157	0.0000	0.0205	0.0000	0.0199
NBP[1]531*	0.0000	0.0152	0.0000	0.0211	0.0000	0.0203
NBP[1]557*	0.0000	0.0146	0.0000	0.0216	0.0000	0.0206
NBP[1]582*	0.0000	0.0140	0.0000	0.0220	0.0000	0.0207
NBP[1]608*	0.0000	0.0135	0.0000	0.0224	0.0000	0.0210
NBP[1]634*	0.0000	0.0132	0.0000	0.0233	0.0000	0.0216
NBP[1]659*	0.0000	0.0130	0.0000	0.0243	0.0000	0.0224
NBP[1]685*	0.0000	0.0135	0.0000	0.0265	0.0000	0.0242
NBP[1]711*	0.0000	0.0141	0.0000	0.0291	0.0000	0.0264
NBP[1]736*	0.0000	0.0139	0.0000	0.0302	0.0000	0.0272
NBP[1]762*	0.0000	0.0136	0.0000	0.0308	0.0000	0.0275
NBP[1]788*	0.0000	0.0130	0.0000	0.0313	0.0000	0.0278
NBP[1]825*	0.0000	0.0218	0.0000	0.0562	0.0000	0.0495
NBP[1]873*	0.0000	0.0150	0.0000	0.0420	0.0000	0.0365
NBP[1]926*	0.0000	0.0118	0.0000	0.0356	0.0000	0.0306
NBP[1]978*	0.0000	0.0121	0.0000	0.0400	0.0000	0.0339
NBP[1]1021*	0.0000	0.0059	0.0000	0.0208	0.0000	0.0175
NBP[1]1075*	0.0000	0.0036	0.0000	0.0135	0.0000	0.0112
NBP[1]1123*	0.0000	0.0033	0.0000	0.0131	0.0000	0.0108
NBP[1]1173*	0.0000	0.0021	0.0000	0.0090	0.0000	0.0073
NBP[1]1250*	0.0000	0.0010	0.0000	0.0045	0.0000	0.0036
NBP[1]1339*	0.0000	0.0000	0.0000	0.0002	0.0000	0.0001
NBP[1]1432*	0.0000	0.0000	0.0000	0.0000	0.0000	0.0000
NBP[1]1528*	0.0000	0.0000	0.0000	0.0000	0.0000	0.0000
NBP[1]1637*	0.0000	0.0000	0.0000	0.0000	0.0000	0.0000
NBP[1]1732*	0.0000	0.0000	0.0000	0.0000	0.0000	0.0000

* Specified by user.

Material Stream: 11 (continued)

Fluid Package: Basis-1
Property Package: Peng-Robinson

COMPOSITION

Liquid Phase (continued)

Phase Fraction 0.0000

COMPONENTS	MOLAR FLOW (kgmole/h)	MOLE FRACTION	MASS FLOW (tonne/d)	MASS FRACTION	LIQUID VOLUME FLOW (m3/h)	LIQUID VOLUME FRACTION
NBP[1]1819*	0.0000	0.0000	0.0000	0.0000	0.0000	0.0000
NBP[1]1913*	0.0000	0.0000	0.0000	0.0000	0.0000	0.0000
Total	0.0000	1.0000	0.0000	1.0000	0.0000	1.0000

Material Stream: 12

Fluid Package: Basis-1
Property Package: Peng-Robinson

CONDITIONS

		Overall	Vapour Phase			
Vapour / Phase Fraction		1.0000	1.0000			
Temperature:	(F)	98.22	98.22			
Pressure:	(psig)	20.00	20.00			
Molar Flow	(MMSCFD)	2.950	2.950			
Mass Flow	(tonne/d)	81.67	81.67			
Std Ideal Liq Vol Flow	(barrel/day)	1218	1218			
Molar Enthalpy	(kJ/kgmole)	-1.307e+005	-1.307e+005			
Molar Entropy	(kJ/kgmole-C)	181.9	181.9			
Heat Flow	(MMBtu/hr)	-18.20	-18.20			
Liq Vol Flow @Std Cond	(barrel/day)	5.227e+005 *	5.227e+005			

PROPERTIES

		Overall	Vapour Phase			
Molecular Weight		23.16	23.16			
Molar Density	(kgmole/m3)	9.340e-002	9.340e-002			
Mass Density	(kg/m3)	2.163	2.163			
Act. Volume Flow	(barrel/day)	2.374e+005	2.374e+005			
Mass Enthalpy	(kJ/kg)	-5643	-5643			
Mass Entropy	(kJ/kg-C)	7.852	7.852			
Heat Capacity	(kJ/kgmole-C)	38.74	38.74			
Mass Heat Capacity	(kJ/kg-C)	1.673	1.673			
LHV Molar Basis (Std)	(Btu/SCF)	---	---			
LHV Mass Basis (Std)	(kJ/kg)	---	---			
Phase Fraction [Vol. Basis]		1.000	1.000			
Phase Fraction [Mass Basis]		1.000	1.000			
Partial Pressure of CO2	(psig)	-8.341	---			
Cost Based on Flow	(Cost/s)	0.0000	0.0000			
Act. Gas Flow	(ACT_m3/h)	1573	1573			
Avg. Liq. Density	(kgmole/m3)	18.21	18.21			
Specific Heat	(kJ/kgmole-C)	38.74	38.74			
Std. Gas Flow	(STD_m3/h)	3474	3474			
Std. Ideal Liq. Mass Density	(kg/m3)	421.8	421.8			
Act. Liq. Flow	(barrel/day)	---	---			
Z Factor		0.9939	0.9939			
Watson K		14.64	14.64			
User Property		---	---			
Partial Pressure of H2S	(psig)	-14.70	---			
Cp/(Cp - R)		1.273	1.273			
Cp/Cv		1.283	1.283			
Heat of Vap.	(kJ/kgmole)	1.600e+004	---			
Kinematic Viscosity	(cSt)	5.797	5.797			
Liq. Mass Density (Std. Cond)	(kg/m3)	0.9828	0.9828			
Liq. Vol. Flow (Std. Cond)	(barrel/day)	5.227e+005	5.227e+005			
Liquid Fraction		0.0000	0.0000			
Molar Volume	(m3/kgmole)	10.71	10.71			

* Specified by user.

Material Stream: 12 (continued)

Fluid Package: Basis-1
Property Package: Peng-Robinson

PROPERTIES

		Overall	Vapour Phase			
Mass Heat of Vap.	(kJ/kg)	690.7	---			
Phase Fraction [Molar Basis]		1.0000	1.0000			
Surface Tension	(dyne/cm)	---	---			
Thermal Conductivity	(W/m-K)	2.990e-002	2.990e-002			
Viscosity	(cP)	1.254e-002	1.254e-002			
Cv (Semi-Ideal)	(kJ/kgmole-C)	30.42	30.42			
Mass Cv (Semi-Ideal)	(kJ/kg-C)	1.314	1.314			
Cv	(kJ/kgmole-C)	30.19	30.19			
Mass Cv	(kJ/kg-C)	1.303	1.303			
Cv (Ent. Method)	(kJ/kgmole-C)	---	---			
Mass Cv (Ent. Method)	(kJ/kg-C)	---	---			
Cp/Cv (Ent. Method)		---	---			
Reid VP at 37.8 C	(psig)	---	---			
True VP at 37.8 C	(psig)	---	---			
Liq. Vol. Flow - Sum(Std. Cond)	(barrel/day)	5.227e+005	5.227e+005			
HHV Molar Basis (Std)	(Btu/SCF)	---	---			
HHV Mass Basis (Std)	(kJ/kg)	---	---			
CO2 Loading		---	---			
CO2 App ML Con	(kgmole/m3)	---	---			
CO2 App WT Con	(kgmol/kg)	---	---			
Phase Fraction [Act. Vol. Basis]		1.000	1.000			
Mass Exergy	(kJ/kg)	91.89	---			
Viscosity Index		-9.186	---			
Ideal Gas Cp/Cv		1.276	1.276			
Ideal Gas Cp	(kJ/kgmole-C)	38.47	38.47			
Mass Ideal Gas Cp	(kJ/kg-C)	1.661	1.661			
Bubble Point Pressure	(psig)	---	---			

COMPOSITION

Overall Phase

Vapour Fraction 1.0000

COMPONENTS	MOLAR FLOW (kgmole/h)	MOLE FRACTION	MASS FLOW (tonne/d)	MASS FRACTION	LIQUID VOLUME FLOW (m3/h)	LIQUID VOLUME FRACTION
Methane	103.3277	0.7033	39.7842	0.4872	5.5368	0.6864
Ethane	6.5539	0.0446	4.7298	0.0579	0.5541	0.0687
Propane	1.7424	0.0119	1.8440	0.0226	0.1516	0.0188
i-Butane	0.2500	0.0017	0.3487	0.0043	0.0259	0.0032
n-Butane	0.4714	0.0032	0.6576	0.0081	0.0470	0.0058
i-Pentane	0.0895	0.0006	0.1549	0.0019	0.0104	0.0013
n-Pentane	0.0793	0.0005	0.1373	0.0017	0.0091	0.0011
n-Hexane	0.2675	0.0018	0.5533	0.0068	0.0348	0.0043
Nitrogen	7.0762	0.0482	4.7574	0.0583	0.2458	0.0305
CO2	26.9079	0.1832	28.4210	0.3480	1.4348	0.1779
H2S	0.0000	0.0000	0.0000	0.0000	0.0000	0.0000
H2O	0.0144	0.0001	0.0062	0.0001	0.0003	0.0000
NBP[1]95*	0.0246	0.0002	0.0400	0.0005	0.0025	0.0003
NBP[1]121*	0.0222	0.0002	0.0389	0.0005	0.0024	0.0003
NBP[1]147*	0.0203	0.0001	0.0391	0.0005	0.0023	0.0003
NBP[1]171*	0.0267	0.0002	0.0563	0.0007	0.0033	0.0004
NBP[1]195*	0.0230	0.0002	0.0516	0.0006	0.0030	0.0004
NBP[1]222*	0.0099	0.0001	0.0238	0.0003	0.0014	0.0002
NBP[1]248*	0.0047	0.0000	0.0121	0.0001	0.0007	0.0001
NBP[1]273*	0.0021	0.0000	0.0057	0.0001	0.0003	0.0000
NBP[1]299*	0.0009	0.0000	0.0025	0.0000	0.0001	0.0000
NBP[1]325*	0.0003	0.0000	0.0010	0.0000	0.0001	0.0000
NBP[1]351*	0.0001	0.0000	0.0004	0.0000	0.0000	0.0000
NBP[1]377*	0.0001	0.0000	0.0002	0.0000	0.0000	0.0000

* Specified by user.

Material Stream: 12 (continued)

Fluid Package: Basis-1
Property Package: Peng-Robinson

COMPOSITION

Overall Phase (continued)

Vapour Fraction 1.0000

COMPONENTS	MOLAR FLOW (kgmole/h)	MOLE FRACTION	MASS FLOW (tonne/d)	MASS FRACTION	LIQUID VOLUME FLOW (m3/h)	LIQUID VOLUME FRACTION
NBP[1]402*	0.0000	0.0000	0.0001	0.0000	0.0000	0.0000
NBP[1]428*	0.0000	0.0000	0.0000	0.0000	0.0000	0.0000
NBP[1]454*	0.0000	0.0000	0.0000	0.0000	0.0000	0.0000
NBP[1]480*	0.0000	0.0000	0.0000	0.0000	0.0000	0.0000
NBP[1]505*	0.0000	0.0000	0.0000	0.0000	0.0000	0.0000
NBP[1]531*	0.0000	0.0000	0.0000	0.0000	0.0000	0.0000
NBP[1]557*	0.0000	0.0000	0.0000	0.0000	0.0000	0.0000
NBP[1]582*	0.0000	0.0000	0.0000	0.0000	0.0000	0.0000
NBP[1]608*	0.0000	0.0000	0.0000	0.0000	0.0000	0.0000
NBP[1]634*	0.0000	0.0000	0.0000	0.0000	0.0000	0.0000
NBP[1]659*	0.0000	0.0000	0.0000	0.0000	0.0000	0.0000
NBP[1]685*	0.0000	0.0000	0.0000	0.0000	0.0000	0.0000
NBP[1]711*	0.0000	0.0000	0.0000	0.0000	0.0000	0.0000
NBP[1]736*	0.0000	0.0000	0.0000	0.0000	0.0000	0.0000
NBP[1]762*	0.0000	0.0000	0.0000	0.0000	0.0000	0.0000
NBP[1]788*	0.0000	0.0000	0.0000	0.0000	0.0000	0.0000
NBP[1]825*	0.0000	0.0000	0.0000	0.0000	0.0000	0.0000
NBP[1]873*	0.0000	0.0000	0.0000	0.0000	0.0000	0.0000
NBP[1]926*	0.0000	0.0000	0.0000	0.0000	0.0000	0.0000
NBP[1]978*	0.0000	0.0000	0.0000	0.0000	0.0000	0.0000
NBP[1]1021*	0.0000	0.0000	0.0000	0.0000	0.0000	0.0000
NBP[1]1075*	0.0000	0.0000	0.0000	0.0000	0.0000	0.0000
NBP[1]1123*	0.0000	0.0000	0.0000	0.0000	0.0000	0.0000
NBP[1]1173*	0.0000	0.0000	0.0000	0.0000	0.0000	0.0000
NBP[1]1250*	0.0000	0.0000	0.0000	0.0000	0.0000	0.0000
NBP[1]1339*	0.0000	0.0000	0.0000	0.0000	0.0000	0.0000
NBP[1]1432*	0.0000	0.0000	0.0000	0.0000	0.0000	0.0000
NBP[1]1528*	0.0000	0.0000	0.0000	0.0000	0.0000	0.0000
NBP[1]1637*	0.0000	0.0000	0.0000	0.0000	0.0000	0.0000
NBP[1]1732*	0.0000	0.0000	0.0000	0.0000	0.0000	0.0000
NBP[1]1819*	0.0000	0.0000	0.0000	0.0000	0.0000	0.0000
NBP[1]1913*	0.0000	0.0000	0.0000	0.0000	0.0000	0.0000
Total	146.9151	1.0000	81.6666	1.0000	8.0665	1.0000

Vapour Phase

Phase Fraction 1.000

COMPONENTS	MOLAR FLOW (kgmole/h)	MOLE FRACTION	MASS FLOW (tonne/d)	MASS FRACTION	LIQUID VOLUME FLOW (m3/h)	LIQUID VOLUME FRACTION
Methane	103.3277	0.7033	39.7842	0.4872	5.5368	0.6864
Ethane	6.5539	0.0446	4.7298	0.0579	0.5541	0.0687
Propane	1.7424	0.0119	1.8440	0.0226	0.1516	0.0188
i-Butane	0.2500	0.0017	0.3487	0.0043	0.0259	0.0032
n-Butane	0.4714	0.0032	0.6576	0.0081	0.0470	0.0058
i-Pentane	0.0895	0.0006	0.1549	0.0019	0.0104	0.0013
n-Pentane	0.0793	0.0005	0.1373	0.0017	0.0091	0.0011
n-Hexane	0.2675	0.0018	0.5533	0.0068	0.0348	0.0043
Nitrogen	7.0762	0.0482	4.7574	0.0583	0.2458	0.0305
CO2	26.9079	0.1832	28.4210	0.3480	1.4348	0.1779
H2S	0.0000	0.0000	0.0000	0.0000	0.0000	0.0000
H2O	0.0144	0.0001	0.0062	0.0001	0.0003	0.0000
NBP[1]95*	0.0246	0.0002	0.0400	0.0005	0.0025	0.0003
NBP[1]121*	0.0222	0.0002	0.0389	0.0005	0.0024	0.0003
NBP[1]147*	0.0203	0.0001	0.0391	0.0005	0.0023	0.0003
NBP[1]171*	0.0267	0.0002	0.0563	0.0007	0.0033	0.0004
NBP[1]195*	0.0230	0.0002	0.0516	0.0006	0.0030	0.0004

* Specified by user.

Material Stream: 12 (continued)

Fluid Package: Basis-1
Property Package: Peng-Robinson

COMPOSITION

Vapour Phase (continued)

Phase Fraction 1.000

COMPONENTS	MOLAR FLOW (kgmole/h)	MOLE FRACTION	MASS FLOW (tonne/d)	MASS FRACTION	LIQUID VOLUME FLOW (m3/h)	LIQUID VOLUME FRACTION
NBP[1]222*	0.0099	0.0001	0.0238	0.0003	0.0014	0.0002
NBP[1]248*	0.0047	0.0000	0.0121	0.0001	0.0007	0.0001
NBP[1]273*	0.0021	0.0000	0.0057	0.0001	0.0003	0.0000
NBP[1]299*	0.0009	0.0000	0.0025	0.0000	0.0001	0.0000
NBP[1]325*	0.0003	0.0000	0.0010	0.0000	0.0001	0.0000
NBP[1]351*	0.0001	0.0000	0.0004	0.0000	0.0000	0.0000
NBP[1]377*	0.0001	0.0000	0.0002	0.0000	0.0000	0.0000
NBP[1]402*	0.0000	0.0000	0.0001	0.0000	0.0000	0.0000
NBP[1]428*	0.0000	0.0000	0.0000	0.0000	0.0000	0.0000
NBP[1]454*	0.0000	0.0000	0.0000	0.0000	0.0000	0.0000
NBP[1]480*	0.0000	0.0000	0.0000	0.0000	0.0000	0.0000
NBP[1]505*	0.0000	0.0000	0.0000	0.0000	0.0000	0.0000
NBP[1]531*	0.0000	0.0000	0.0000	0.0000	0.0000	0.0000
NBP[1]557*	0.0000	0.0000	0.0000	0.0000	0.0000	0.0000
NBP[1]582*	0.0000	0.0000	0.0000	0.0000	0.0000	0.0000
NBP[1]608*	0.0000	0.0000	0.0000	0.0000	0.0000	0.0000
NBP[1]634*	0.0000	0.0000	0.0000	0.0000	0.0000	0.0000
NBP[1]659*	0.0000	0.0000	0.0000	0.0000	0.0000	0.0000
NBP[1]685*	0.0000	0.0000	0.0000	0.0000	0.0000	0.0000
NBP[1]711*	0.0000	0.0000	0.0000	0.0000	0.0000	0.0000
NBP[1]736*	0.0000	0.0000	0.0000	0.0000	0.0000	0.0000
NBP[1]762*	0.0000	0.0000	0.0000	0.0000	0.0000	0.0000
NBP[1]788*	0.0000	0.0000	0.0000	0.0000	0.0000	0.0000
NBP[1]825*	0.0000	0.0000	0.0000	0.0000	0.0000	0.0000
NBP[1]873*	0.0000	0.0000	0.0000	0.0000	0.0000	0.0000
NBP[1]926*	0.0000	0.0000	0.0000	0.0000	0.0000	0.0000
NBP[1]978*	0.0000	0.0000	0.0000	0.0000	0.0000	0.0000
NBP[1]1021*	0.0000	0.0000	0.0000	0.0000	0.0000	0.0000
NBP[1]1075*	0.0000	0.0000	0.0000	0.0000	0.0000	0.0000
NBP[1]1123*	0.0000	0.0000	0.0000	0.0000	0.0000	0.0000
NBP[1]1173*	0.0000	0.0000	0.0000	0.0000	0.0000	0.0000
NBP[1]1250*	0.0000	0.0000	0.0000	0.0000	0.0000	0.0000
NBP[1]1339*	0.0000	0.0000	0.0000	0.0000	0.0000	0.0000
NBP[1]1432*	0.0000	0.0000	0.0000	0.0000	0.0000	0.0000
NBP[1]1528*	0.0000	0.0000	0.0000	0.0000	0.0000	0.0000
NBP[1]1637*	0.0000	0.0000	0.0000	0.0000	0.0000	0.0000
NBP[1]1732*	0.0000	0.0000	0.0000	0.0000	0.0000	0.0000
NBP[1]1819*	0.0000	0.0000	0.0000	0.0000	0.0000	0.0000
NBP[1]1913*	0.0000	0.0000	0.0000	0.0000	0.0000	0.0000
Total	146.9151	1.0000	81.6666	1.0000	8.0665	1.0000

Material Stream: 13

Fluid Package: Basis-1
Property Package: Peng-Robinson

CONDITIONS

		Overall	Vapour Phase	Liquid Phase	Liquid Phase
Vapour / Phase Fraction		0.0000	0.0000	0.0145	0.9855
Temperature:	(F)	76.03	76.03	76.03	76.03
Pressure:	(psig)	20.00	20.00	20.00	20.00
Molar Flow	(MMSCFD)	0.2482	0.0000	3.588e-003	0.2446
Mass Flow	(tonne/d)	49.00	0.0000	2.899	46.10
Std Ideal Liq Vol Flow	(barrel/day)	384.3	0.0000	18.27	366.0
Molar Enthalpy	(kJ/kgmole)	-3.624e+005	-1.057e+005	-1.450e+006	-3.464e+005
Molar Entropy	(kJ/kgmole-C)	248.3	181.0	1412	231.2

* Specified by user.

Material Stream: 13 (continued)

Fluid Package: Basis-1
Property Package: Peng-Robinson

CONDITIONS

	Overall	Vapour Phase	Liquid Phase	Liquid Phase
Heat Flow (MMBtu/hr)	-4.246	0.0000	-0.2456	-4.000
Liq Vol Flow @Std Cond (barrel/day)	379.8 *	0.0000	18.49	361.1

PROPERTIES

	Overall	Vapour Phase	Liquid Phase	Liquid Phase
Molecular Weight	165.2	32.82	676.0	157.7
Molar Density (kgmole/m3)	4.870	9.871e-002	1.450	5.044
Mass Density (kg/m3)	804.3	3.240	980.5	795.3
Act. Volume Flow (barrel/day)	383.2	0.0000	18.60	364.6
Mass Enthalpy (kJ/kg)	-2194	-3222	-2145	-2197
Mass Entropy (kJ/kg-C)	1.503	5.515	2.089	1.466
Heat Capacity (kJ/kgmole-C)	321.4	58.23	1261	307.6
Mass Heat Capacity (kJ/kg-C)	1.946	1.774	1.866	1.951
LHV Molar Basis (Std) (Btu/SCF)	---	---	---	---
LHV Mass Basis (Std) (kJ/kg)	---	---	---	---
Phase Fraction [Vol. Basis]	---	---	4.754e-002	0.9525
Phase Fraction [Mass Basis]	0.0000	0.0000	5.917e-002	0.9408
Partial Pressure of CO2 (psig)	-14.70	---	---	---
Cost Based on Flow (Cost/s)	0.0000	0.0000	0.0000	0.0000
Act. Gas Flow (ACT_m3/h)	---	---	---	---
Avg. Liq. Density (kgmole/m3)	4.856	13.55	1.477	5.024
Specific Heat (kJ/kgmole-C)	321.4	58.23	1261	307.6
Std. Gas Flow (STD_m3/h)	292.3	0.0000	4.225	288.1
Std. Ideal Liq. Mass Density (kg/m3)	801.9	444.5	998.2	792.1
Act. Liq. Flow (barrel/day)	383.2	---	18.60	364.6
Z Factor	---	0.9794	6.665e-002	1.917e-002
Watson K	11.87	15.53	11.93	11.91
User Property	---	---	---	---
Partial Pressure of H2S (psig)	-14.70	---	---	---
Cp/(Cp - R)	1.027	1.167	1.007	1.028
Cp/Cv	1.027	1.182	1.100	1.028
Heat of Vap. (kJ/kgmole)	3.183e+005	---	---	---
Kinematic Viscosity (cSt)	2.503	3.107	1.283e+004	1.842
Liq. Mass Density (Std. Cond) (kg/m3)	811.5	3.510	986.4	803.0
Liq. Vol. Flow (Std. Cond) (barrel/day)	379.8	0.0000	18.49	361.1
Liquid Fraction	1.000	0.0000	1.000	1.000
Molar Volume (m3/kgmole)	0.2053	10.13	0.6895	0.1982
Mass Heat of Vap. (kJ/kg)	1928	---	---	---
Phase Fraction [Molar Basis]	0.0000	0.0000	0.0145	0.9855
Surface Tension (dyne/cm)	---	---	26.06	21.47
Thermal Conductivity (W/m-K)	0.1136	2.329e-002	0.1366	0.1125
Viscosity (cP)	2.503	1.007e-002	1.258e+004	1.465
Cv (Semi-Ideal) (kJ/kgmole-C)	313.1	49.92	1253	---
Mass Cv (Semi-Ideal) (kJ/kg-C)	1.896	1.521	1.854	---
Cv (kJ/kgmole-C)	313.1	49.26	1147	---
Mass Cv (kJ/kg-C)	1.896	1.501	1.697	---
Cv (Ent. Method) (kJ/kgmole-C)	---	---	1204	---
Mass Cv (Ent. Method) (kJ/kg-C)	---	---	1.781	---
Cp/Cv (Ent. Method)	---	---	1.047	---
Reid VP at 37.8 C (psig)	4.448	862.7	-6.278	4.691
True VP at 37.8 C (psig)	27.11	1393	25.40	27.54
Liq. Vol. Flow - Sum(Std. Cond) (barrel/day)	18.49	0.0000	18.49	0.0000
HHV Molar Basis (Std) (Btu/SCF)	---	---	---	---
HHV Mass Basis (Std) (kJ/kg)	---	---	---	---
CO2 Loading	---	---	---	---
CO2 App ML Con (kgmole/m3)	7.528e-003	---	2.588e-003	7.780e-003
CO2 App WT Con (kgmol/kg)	9.359e-006	---	2.639e-006	9.782e-006

* Specified by user.

Material Stream: 13 (continued)

Fluid Package: Basis-1
Property Package: Peng-Robinson

PROPERTIES

	Overall	Vapour Phase	Liquid Phase	Liquid Phase
Phase Fraction [Act. Vol. Basis]	0.0000	0.0000	4.854e-002	0.9515
Mass Exergy (kJ/kg)	0.4067	---	---	---
Viscosity Index	12.47	---	---	---
Ideal Gas Cp/Cv	1.034	1.169	1.008	1.035
Ideal Gas Cp (kJ/kgmole-C)	255.1	57.49	1043	243.6
Mass Ideal Gas Cp (kJ/kg-C)	1.545	1.752	1.543	1.545
Bubble Point Pressure (psig)	19.63	---	---	---

COMPOSITION

Overall Phase

Vapour Fraction 0.0000

COMPONENTS	MOLAR FLOW (kgmole/h)	MOLE FRACTION	MASS FLOW (tonne/d)	MASS FRACTION	LIQUID VOLUME FLOW (m3/h)	LIQUID VOLUME FRACTION
Methane	0.0597	0.0048	0.0230	0.0005	0.0032	0.0013
Ethane	0.1485	0.0120	0.1071	0.0022	0.0126	0.0049
Propane	0.5600	0.0453	0.5926	0.0121	0.0487	0.0191
i-Butane	0.2431	0.0197	0.3391	0.0069	0.0251	0.0099
n-Butane	0.6678	0.0540	0.9316	0.0190	0.0666	0.0261
i-Pentane	0.3044	0.0246	0.5270	0.0108	0.0352	0.0138
n-Pentane	0.4078	0.0330	0.7062	0.0144	0.0467	0.0184
n-Hexane	1.0054	0.0813	2.0795	0.0424	0.1308	0.0514
Nitrogen	0.0003	0.0000	0.0002	0.0000	0.0000	0.0000
CO2	0.0191	0.0015	0.0202	0.0004	0.0010	0.0004
H2S	0.0000	0.0000	0.0000	0.0000	0.0000	0.0000
H2O	0.0009	0.0001	0.0004	0.0000	0.0000	0.0000
NBP[1]95*	0.1198	0.0097	0.1952	0.0040	0.0120	0.0047
NBP[1]121*	0.1792	0.0145	0.3133	0.0064	0.0190	0.0074
NBP[1]147*	0.2767	0.0224	0.5325	0.0109	0.0317	0.0124
NBP[1]171*	0.6028	0.0488	1.2685	0.0259	0.0742	0.0292
NBP[1]195*	0.8693	0.0703	1.9523	0.0398	0.1130	0.0444
NBP[1]222*	0.7005	0.0567	1.6919	0.0345	0.0967	0.0380
NBP[1]248*	0.6123	0.0495	1.5901	0.0325	0.0898	0.0353
NBP[1]273*	0.5089	0.0412	1.4133	0.0288	0.0789	0.0310
NBP[1]299*	0.4056	0.0328	1.2012	0.0245	0.0663	0.0261
NBP[1]325*	0.2974	0.0241	0.9355	0.0191	0.0511	0.0201
NBP[1]351*	0.2431	0.0197	0.8128	0.0166	0.0440	0.0173
NBP[1]377*	0.2234	0.0181	0.7968	0.0163	0.0427	0.0168
NBP[1]402*	0.2055	0.0166	0.7814	0.0159	0.0414	0.0163
NBP[1]428*	0.1957	0.0158	0.7942	0.0162	0.0417	0.0164
NBP[1]454*	0.1954	0.0158	0.8472	0.0173	0.0441	0.0173
NBP[1]480*	0.1981	0.0160	0.9177	0.0187	0.0472	0.0186
NBP[1]505*	0.1920	0.0155	0.9481	0.0194	0.0484	0.0190
NBP[1]531*	0.1852	0.0150	0.9739	0.0199	0.0492	0.0193
NBP[1]557*	0.1784	0.0144	0.9978	0.0204	0.0500	0.0196
NBP[1]582*	0.1706	0.0138	1.0132	0.0207	0.0503	0.0198
NBP[1]608*	0.1643	0.0133	1.0351	0.0211	0.0510	0.0200
NBP[1]634*	0.1611	0.0130	1.0753	0.0219	0.0526	0.0206
NBP[1]659*	0.1586	0.0128	1.1194	0.0228	0.0543	0.0213
NBP[1]685*	0.1641	0.0133	1.2227	0.0250	0.0588	0.0231
NBP[1]711*	0.1715	0.0139	1.3445	0.0274	0.0642	0.0252
NBP[1]736*	0.1697	0.0137	1.3915	0.0284	0.0659	0.0259
NBP[1]762*	0.1653	0.0134	1.4214	0.0290	0.0669	0.0263
NBP[1]788*	0.1585	0.0128	1.4424	0.0294	0.0674	0.0265
NBP[1]825*	0.2655	0.0215	2.5963	0.0530	0.1201	0.0472
NBP[1]873*	0.1830	0.0148	1.9404	0.0396	0.0887	0.0349
NBP[1]926*	0.1437	0.0116	1.6472	0.0336	0.0744	0.0292
NBP[1]978*	0.1474	0.0119	1.8524	0.0378	0.0825	0.0324

* Specified by user.

Material Stream: 13 (continued)

Fluid Package: Basis-1
Property Package: Peng-Robinson

COMPOSITION

Overall Phase (continued)

Vapour Fraction 0.0000

COMPONENTS	MOLAR FLOW (kgmole/h)	MOLE FRACTION	MASS FLOW (tonne/d)	MASS FRACTION	LIQUID VOLUME FLOW (m3/h)	LIQUID VOLUME FRACTION
NBP[1]1021*	0.0728	0.0059	0.9655	0.0197	0.0426	0.0167
NBP[1]1075*	0.0449	0.0036	0.6310	0.0129	0.0276	0.0108
NBP[1]1123*	0.0417	0.0034	0.6267	0.0128	0.0271	0.0107
NBP[1]1173*	0.0300	0.0024	0.4772	0.0097	0.0205	0.0080
NBP[1]1250*	0.0393	0.0032	0.6767	0.0138	0.0287	0.0113
NBP[1]1339*	0.0364	0.0029	0.6999	0.0143	0.0291	0.0114
NBP[1]1432*	0.0257	0.0021	0.5397	0.0110	0.0221	0.0087
NBP[1]1528*	0.0180	0.0015	0.4082	0.0083	0.0165	0.0065
NBP[1]1637*	0.0127	0.0010	0.3047	0.0062	0.0122	0.0048
NBP[1]1732*	0.0101	0.0008	0.2565	0.0052	0.0101	0.0040
NBP[1]1819*	0.0007	0.0001	0.0194	0.0004	0.0008	0.0003
NBP[1]1913*	0.0000	0.0000	0.0000	0.0000	0.0000	0.0000
Total	12.3617	1.0000	48.9981	1.0000	2.5459	1.0000

Vapour Phase

Phase Fraction 0.0000

COMPONENTS	MOLAR FLOW (kgmole/h)	MOLE FRACTION	MASS FLOW (tonne/d)	MASS FRACTION	LIQUID VOLUME FLOW (m3/h)	LIQUID VOLUME FRACTION
Methane	0.0000	0.4139	0.0000	0.2023	0.0000	0.3004
Ethane	0.0000	0.1898	0.0000	0.1739	0.0000	0.2173
Propane	0.0000	0.1978	0.0000	0.2658	0.0000	0.2332
i-Butane	0.0000	0.0329	0.0000	0.0583	0.0000	0.0461
n-Butane	0.0000	0.0648	0.0000	0.1147	0.0000	0.0874
i-Pentane	0.0000	0.0114	0.0000	0.0250	0.0000	0.0178
n-Pentane	0.0000	0.0114	0.0000	0.0251	0.0000	0.0177
n-Hexane	0.0000	0.0084	0.0000	0.0220	0.0000	0.0147
Nitrogen	0.0000	0.0050	0.0000	0.0043	0.0000	0.0024
CO2	0.0000	0.0432	0.0000	0.0580	0.0000	0.0312
H2S	0.0000	0.0000	0.0000	0.0000	0.0000	0.0000
H2O	0.0000	0.0021	0.0000	0.0011	0.0000	0.0005
NBP[1]95*	0.0000	0.0035	0.0000	0.0073	0.0000	0.0048
NBP[1]121*	0.0000	0.0032	0.0000	0.0071	0.0000	0.0046
NBP[1]147*	0.0000	0.0029	0.0000	0.0071	0.0000	0.0045
NBP[1]171*	0.0000	0.0038	0.0000	0.0103	0.0000	0.0064
NBP[1]195*	0.0000	0.0033	0.0000	0.0094	0.0000	0.0058
NBP[1]222*	0.0000	0.0014	0.0000	0.0043	0.0000	0.0027
NBP[1]248*	0.0000	0.0007	0.0000	0.0022	0.0000	0.0013
NBP[1]273*	0.0000	0.0003	0.0000	0.0010	0.0000	0.0006
NBP[1]299*	0.0000	0.0001	0.0000	0.0005	0.0000	0.0003
NBP[1]325*	0.0000	0.0000	0.0000	0.0002	0.0000	0.0001
NBP[1]351*	0.0000	0.0000	0.0000	0.0001	0.0000	0.0000
NBP[1]377*	0.0000	0.0000	0.0000	0.0000	0.0000	0.0000
NBP[1]402*	0.0000	0.0000	0.0000	0.0000	0.0000	0.0000
NBP[1]428*	0.0000	0.0000	0.0000	0.0000	0.0000	0.0000
NBP[1]454*	0.0000	0.0000	0.0000	0.0000	0.0000	0.0000
NBP[1]480*	0.0000	0.0000	0.0000	0.0000	0.0000	0.0000
NBP[1]505*	0.0000	0.0000	0.0000	0.0000	0.0000	0.0000
NBP[1]531*	0.0000	0.0000	0.0000	0.0000	0.0000	0.0000
NBP[1]557*	0.0000	0.0000	0.0000	0.0000	0.0000	0.0000
NBP[1]582*	0.0000	0.0000	0.0000	0.0000	0.0000	0.0000
NBP[1]608*	0.0000	0.0000	0.0000	0.0000	0.0000	0.0000
NBP[1]634*	0.0000	0.0000	0.0000	0.0000	0.0000	0.0000
NBP[1]659*	0.0000	0.0000	0.0000	0.0000	0.0000	0.0000
NBP[1]685*	0.0000	0.0000	0.0000	0.0000	0.0000	0.0000
NBP[1]711*	0.0000	0.0000	0.0000	0.0000	0.0000	0.0000

* Specified by user.

Material Stream: 13 (continued)

Fluid Package: Basis-1
Property Package: Peng-Robinson

COMPOSITION

Vapour Phase (continued)

Phase Fraction 0.0000

COMPONENTS	MOLAR FLOW (kgmole/h)	MOLE FRACTION	MASS FLOW (tonne/d)	MASS FRACTION	LIQUID VOLUME FLOW (m3/h)	LIQUID VOLUME FRACTION
NBP[1]736*	0.0000	0.0000	0.0000	0.0000	0.0000	0.0000
NBP[1]762*	0.0000	0.0000	0.0000	0.0000	0.0000	0.0000
NBP[1]788*	0.0000	0.0000	0.0000	0.0000	0.0000	0.0000
NBP[1]825*	0.0000	0.0000	0.0000	0.0000	0.0000	0.0000
NBP[1]873*	0.0000	0.0000	0.0000	0.0000	0.0000	0.0000
NBP[1]926*	0.0000	0.0000	0.0000	0.0000	0.0000	0.0000
NBP[1]978*	0.0000	0.0000	0.0000	0.0000	0.0000	0.0000
NBP[1]1021*	0.0000	0.0000	0.0000	0.0000	0.0000	0.0000
NBP[1]1075*	0.0000	0.0000	0.0000	0.0000	0.0000	0.0000
NBP[1]1123*	0.0000	0.0000	0.0000	0.0000	0.0000	0.0000
NBP[1]1173*	0.0000	0.0000	0.0000	0.0000	0.0000	0.0000
NBP[1]1250*	0.0000	0.0000	0.0000	0.0000	0.0000	0.0000
NBP[1]1339*	0.0000	0.0000	0.0000	0.0000	0.0000	0.0000
NBP[1]1432*	0.0000	0.0000	0.0000	0.0000	0.0000	0.0000
NBP[1]1528*	0.0000	0.0000	0.0000	0.0000	0.0000	0.0000
NBP[1]1637*	0.0000	0.0000	0.0000	0.0000	0.0000	0.0000
NBP[1]1732*	0.0000	0.0000	0.0000	0.0000	0.0000	0.0000
NBP[1]1819*	0.0000	0.0000	0.0000	0.0000	0.0000	0.0000
NBP[1]1913*	0.0000	0.0000	0.0000	0.0000	0.0000	0.0000
Total	0.0000	1.0000	0.0000	1.0000	0.0000	1.0000

Liquid Phase

Phase Fraction 1.446e-002

COMPONENTS	MOLAR FLOW (kgmole/h)	MOLE FRACTION	MASS FLOW (tonne/d)	MASS FRACTION	LIQUID VOLUME FLOW (m3/h)	LIQUID VOLUME FRACTION
Methane	0.0010	0.0055	0.0004	0.0001	0.0001	0.0004
Ethane	0.0015	0.0086	0.0011	0.0004	0.0001	0.0011
Propane	0.0044	0.0246	0.0047	0.0016	0.0004	0.0032
i-Butane	0.0017	0.0093	0.0023	0.0008	0.0002	0.0014
n-Butane	0.0041	0.0228	0.0057	0.0020	0.0004	0.0033
i-Pentane	0.0016	0.0092	0.0028	0.0010	0.0002	0.0016
n-Pentane	0.0020	0.0112	0.0035	0.0012	0.0002	0.0019
n-Hexane	0.0041	0.0232	0.0086	0.0030	0.0005	0.0045
Nitrogen	0.0000	0.0000	0.0000	0.0000	0.0000	0.0000
CO2	0.0003	0.0018	0.0003	0.0001	0.0000	0.0001
H2S	0.0000	0.0000	0.0000	0.0000	0.0000	0.0000
H2O	0.0000	0.0001	0.0000	0.0000	0.0000	0.0000
NBP[1]95*	0.0006	0.0032	0.0009	0.0003	0.0001	0.0005
NBP[1]121*	0.0008	0.0044	0.0014	0.0005	0.0001	0.0007
NBP[1]147*	0.0011	0.0061	0.0021	0.0007	0.0001	0.0010
NBP[1]171*	0.0022	0.0122	0.0046	0.0016	0.0003	0.0022
NBP[1]195*	0.0029	0.0162	0.0065	0.0022	0.0004	0.0031
NBP[1]222*	0.0022	0.0120	0.0052	0.0018	0.0003	0.0025
NBP[1]248*	0.0017	0.0097	0.0045	0.0016	0.0003	0.0021
NBP[1]273*	0.0013	0.0075	0.0037	0.0013	0.0002	0.0017
NBP[1]299*	0.0010	0.0056	0.0030	0.0010	0.0002	0.0013
NBP[1]325*	0.0007	0.0038	0.0021	0.0007	0.0001	0.0010
NBP[1]351*	0.0005	0.0029	0.0017	0.0006	0.0001	0.0008
NBP[1]377*	0.0004	0.0025	0.0016	0.0005	0.0001	0.0007
NBP[1]402*	0.0004	0.0021	0.0015	0.0005	0.0001	0.0006
NBP[1]428*	0.0003	0.0019	0.0014	0.0005	0.0001	0.0006
NBP[1]454*	0.0003	0.0018	0.0014	0.0005	0.0001	0.0006
NBP[1]480*	0.0003	0.0017	0.0014	0.0005	0.0001	0.0006
NBP[1]505*	0.0003	0.0015	0.0014	0.0005	0.0001	0.0006
NBP[1]531*	0.0003	0.0014	0.0013	0.0005	0.0001	0.0006

* Specified by user.

Material Stream: 13 (continued)

Fluid Package: Basis-1
Property Package: Peng-Robinson

COMPOSITION

Liquid Phase (continued)

Phase Fraction 1.446e-002

COMPONENTS	MOLAR FLOW (kgmole/h)	MOLE FRACTION	MASS FLOW (tonne/d)	MASS FRACTION	LIQUID VOLUME FLOW (m3/h)	LIQUID VOLUME FRACTION
NBP[1]557*	0.0002	0.0013	0.0013	0.0004	0.0001	0.0005
NBP[1]582*	0.0002	0.0012	0.0013	0.0004	0.0001	0.0005
NBP[1]608*	0.0002	0.0011	0.0012	0.0004	0.0001	0.0005
NBP[1]634*	0.0002	0.0010	0.0012	0.0004	0.0001	0.0005
NBP[1]659*	0.0002	0.0010	0.0013	0.0004	0.0001	0.0005
NBP[1]685*	0.0002	0.0010	0.0013	0.0005	0.0001	0.0005
NBP[1]711*	0.0002	0.0010	0.0015	0.0005	0.0001	0.0006
NBP[1]736*	0.0002	0.0010	0.0015	0.0005	0.0001	0.0006
NBP[1]762*	0.0002	0.0010	0.0016	0.0006	0.0001	0.0006
NBP[1]788*	0.0002	0.0011	0.0017	0.0006	0.0001	0.0007
NBP[1]825*	0.0003	0.0020	0.0034	0.0012	0.0002	0.0013
NBP[1]873*	0.0003	0.0017	0.0032	0.0011	0.0001	0.0012
NBP[1]926*	0.0003	0.0019	0.0040	0.0014	0.0002	0.0015
NBP[1]978*	0.0005	0.0029	0.0066	0.0023	0.0003	0.0024
NBP[1]1021*	0.0005	0.0025	0.0060	0.0021	0.0003	0.0022
NBP[1]1075*	0.0007	0.0039	0.0099	0.0034	0.0004	0.0036
NBP[1]1123*	0.0016	0.0090	0.0241	0.0083	0.0010	0.0086
NBP[1]1173*	0.0039	0.0221	0.0628	0.0217	0.0027	0.0223
NBP[1]1250*	0.0272	0.1524	0.4689	0.1617	0.0199	0.1642
NBP[1]1339*	0.0360	0.2015	0.6929	0.2390	0.0288	0.2384
NBP[1]1432*	0.0257	0.1436	0.5397	0.1862	0.0221	0.1829
NBP[1]1528*	0.0180	0.1008	0.4082	0.1408	0.0165	0.1365
NBP[1]1637*	0.0127	0.0708	0.3047	0.1051	0.0122	0.1006
NBP[1]1732*	0.0101	0.0567	0.2565	0.0885	0.0101	0.0838
NBP[1]1819*	0.0007	0.0041	0.0194	0.0067	0.0008	0.0063
NBP[1]1913*	0.0000	0.0000	0.0000	0.0000	0.0000	0.0000
Total	0.1787	1.0000	2.8993	1.0000	0.1210	1.0000

Liquid Phase

Phase Fraction 0.9855

COMPONENTS	MOLAR FLOW (kgmole/h)	MOLE FRACTION	MASS FLOW (tonne/d)	MASS FRACTION	LIQUID VOLUME FLOW (m3/h)	LIQUID VOLUME FRACTION
Methane	0.0587	0.0048	0.0226	0.0005	0.0031	0.0013
Ethane	0.1469	0.0121	0.1060	0.0023	0.0124	0.0051
Propane	0.5556	0.0456	0.5880	0.0128	0.0484	0.0199
i-Butane	0.2414	0.0198	0.3368	0.0073	0.0250	0.0103
n-Butane	0.6638	0.0545	0.9259	0.0201	0.0662	0.0273
i-Pentane	0.3027	0.0248	0.5242	0.0114	0.0350	0.0144
n-Pentane	0.4058	0.0333	0.7027	0.0152	0.0465	0.0192
n-Hexane	1.0013	0.0822	2.0709	0.0449	0.1302	0.0537
Nitrogen	0.0002	0.0000	0.0002	0.0000	0.0000	0.0000
CO2	0.0188	0.0015	0.0198	0.0004	0.0010	0.0004
H2S	0.0000	0.0000	0.0000	0.0000	0.0000	0.0000
H2O	0.0009	0.0001	0.0004	0.0000	0.0000	0.0000
NBP[1]95*	0.1192	0.0098	0.1943	0.0042	0.0119	0.0049
NBP[1]121*	0.1784	0.0146	0.3120	0.0068	0.0189	0.0078
NBP[1]147*	0.2756	0.0226	0.5304	0.0115	0.0315	0.0130
NBP[1]171*	0.6006	0.0493	1.2639	0.0274	0.0740	0.0305
NBP[1]195*	0.8664	0.0711	1.9458	0.0422	0.1126	0.0464
NBP[1]222*	0.6983	0.0573	1.6867	0.0366	0.0964	0.0398
NBP[1]248*	0.6105	0.0501	1.5856	0.0344	0.0895	0.0369
NBP[1]273*	0.5075	0.0417	1.4096	0.0306	0.0787	0.0325
NBP[1]299*	0.4046	0.0332	1.1982	0.0260	0.0662	0.0273
NBP[1]325*	0.2967	0.0244	0.9333	0.0202	0.0510	0.0210
NBP[1]351*	0.2425	0.0199	0.8111	0.0176	0.0439	0.0181

* Specified by user.

Material Stream: 13 (continued)

Fluid Package: Basis-1
Property Package: Peng-Robinson

COMPOSITION

Liquid Phase (continued)

Phase Fraction 0.9855

COMPONENTS	MOLAR FLOW (kgmole/h)	MOLE FRACTION	MASS FLOW (tonne/d)	MASS FRACTION	LIQUID VOLUME FLOW (m3/h)	LIQUID VOLUME FRACTION
NBP[1]377*	0.2230	0.0183	0.7952	0.0172	0.0426	0.0176
NBP[1]402*	0.2051	0.0168	0.7799	0.0169	0.0414	0.0171
NBP[1]428*	0.1954	0.0160	0.7928	0.0172	0.0416	0.0172
NBP[1]454*	0.1951	0.0160	0.8459	0.0183	0.0440	0.0181
NBP[1]480*	0.1978	0.0162	0.9163	0.0199	0.0472	0.0195
NBP[1]505*	0.1917	0.0157	0.9468	0.0205	0.0483	0.0199
NBP[1]531*	0.1850	0.0152	0.9726	0.0211	0.0492	0.0203
NBP[1]557*	0.1782	0.0146	0.9965	0.0216	0.0499	0.0206
NBP[1]582*	0.1704	0.0140	1.0119	0.0220	0.0503	0.0207
NBP[1]608*	0.1641	0.0135	1.0338	0.0224	0.0509	0.0210
NBP[1]634*	0.1609	0.0132	1.0741	0.0233	0.0525	0.0216
NBP[1]659*	0.1584	0.0130	1.1182	0.0243	0.0542	0.0224
NBP[1]685*	0.1639	0.0135	1.2214	0.0265	0.0588	0.0242
NBP[1]711*	0.1714	0.0141	1.3430	0.0291	0.0641	0.0264
NBP[1]736*	0.1696	0.0139	1.3900	0.0302	0.0659	0.0272
NBP[1]762*	0.1651	0.0136	1.4198	0.0308	0.0668	0.0275
NBP[1]788*	0.1583	0.0130	1.4407	0.0313	0.0673	0.0278
NBP[1]825*	0.2651	0.0218	2.5929	0.0562	0.1200	0.0495
NBP[1]873*	0.1827	0.0150	1.9372	0.0420	0.0886	0.0365
NBP[1]926*	0.1434	0.0118	1.6432	0.0356	0.0743	0.0306
NBP[1]978*	0.1468	0.0121	1.8459	0.0400	0.0822	0.0339
NBP[1]1021*	0.0724	0.0059	0.9595	0.0208	0.0424	0.0175
NBP[1]1075*	0.0442	0.0036	0.6211	0.0135	0.0272	0.0112
NBP[1]1123*	0.0401	0.0033	0.6026	0.0131	0.0261	0.0108
NBP[1]1173*	0.0261	0.0021	0.4144	0.0090	0.0178	0.0073
NBP[1]1250*	0.0121	0.0010	0.2078	0.0045	0.0088	0.0036
NBP[1]1339*	0.0004	0.0000	0.0071	0.0002	0.0003	0.0001
NBP[1]1432*	0.0000	0.0000	0.0000	0.0000	0.0000	0.0000
NBP[1]1528*	0.0000	0.0000	0.0000	0.0000	0.0000	0.0000
NBP[1]1637*	0.0000	0.0000	0.0000	0.0000	0.0000	0.0000
NBP[1]1732*	0.0000	0.0000	0.0000	0.0000	0.0000	0.0000
NBP[1]1819*	0.0000	0.0000	0.0000	0.0000	0.0000	0.0000
NBP[1]1913*	0.0000	0.0000	0.0000	0.0000	0.0000	0.0000
Total	12.1830	1.0000	46.0988	1.0000	2.4249	1.0000

Material Stream: FLASH-GAS

Fluid Package: Basis-1
Property Package: Peng-Robinson

CONDITIONS

		Overall
Vapour / Phase Fraction		---
Temperature:	(F)	---
Pressure:	(psig)	450.0
Molar Flow	(MMSCFD)	0.1359
Mass Flow	(tonne/d)	6.156 *
Std Ideal Liq Vol Flow	(barrel/day)	80.89
Molar Enthalpy	(kJ/kgmole)	---
Molar Entropy	(kJ/kgmole-C)	---
Heat Flow	(MMBtu/hr)	---
Liq Vol Flow @Std Cond	(barrel/day)	87.30 *

PROPERTIES

	Overall
Molecular Weight	37.88

Licensed to: PETROCHEMICAL ENGINEERIN
* Specified by user.

Material Stream: FLASH-GAS (continued)

Fluid Package: Basis-1
Property Package: Peng-Robinson

PROPERTIES

		Overall				
Molar Density	(kgmole/m3)	---				
Mass Density	(kg/m3)	---				
Act. Volume Flow	(barrel/day)	---				
Mass Enthalpy	(kJ/kg)	---				
Mass Entropy	(kJ/kg-C)	---				
Heat Capacity	(kJ/kgmole-C)	---				
Mass Heat Capacity	(kJ/kg-C)	---				
LHV Molar Basis (Std)	(Btu/SCF)	---				
LHV Mass Basis (Std)	(kJ/kg)	---				
Phase Fraction [Vol. Basis]		0.0000				
Phase Fraction [Mass Basis]		0.0000				
Partial Pressure of CO2	(psig)	-14.70				
Cost Based on Flow	(Cost/s)	0.0000				
Act. Gas Flow	(ACT_m3/h)	---				
Avg. Liq. Density	(kgmole/m3)	12.64				
Specific Heat	(kJ/kgmole-C)	---				
Std. Gas Flow	(STD_m3/h)	160.1				
Std. Ideal Liq. Mass Density	(kg/m3)	478.7				
Act. Liq. Flow	(barrel/day)	---				
Z Factor		---				
Watson K		14.89				
User Property		---				
Partial Pressure of H2S	(psig)	-14.70				
Cp/(Cp - R)		---				
Cp/Cv		---				
Heat of Vap.	(kJ/kgmole)	---				
Kinematic Viscosity	(cSt)	---				
Liq. Mass Density (Std. Cond)	(kg/m3)	443.5				
Liq. Vol. Flow (Std. Cond)	(barrel/day)	87.30				
Liquid Fraction		---				
Molar Volume	(m3/kgmole)	---				
Mass Heat of Vap.	(kJ/kg)	---				
Phase Fraction [Molar Basis]		---				
Surface Tension	(dyne/cm)	---				
Thermal Conductivity	(W/m-K)	---				
Viscosity	(cP)	---				
Cv (Semi-Ideal)	(kJ/kgmole-C)	---				
Mass Cv (Semi-Ideal)	(kJ/kg-C)	---				
Cv	(kJ/kgmole-C)	---				
Mass Cv	(kJ/kg-C)	---				
Cv (Ent. Method)	(kJ/kgmole-C)	---				
Mass Cv (Ent. Method)	(kJ/kg-C)	---				
Cp/Cv (Ent. Method)		---				
Reid VP at 37.8 C	(psig)	---				
True VP at 37.8 C	(psig)	---				
Liq. Vol. Flow - Sum(Std. Cond)	(barrel/day)	0.0000				
HHV Molar Basis (Std)	(Btu/SCF)	---				
HHV Mass Basis (Std)	(kJ/kg)	---				
CO2 Loading		---				
CO2 App ML Con	(kgmole/m3)	---				
CO2 App WT Con	(kgmol/kg)	1.012e-003				
Phase Fraction [Act. Vol. Basis]		0.0000				
Mass Exergy	(kJ/kg)	9.741e+006				
Viscosity Index		---				
Ideal Gas Cp/Cv		1.000				
Ideal Gas Cp	(kJ/kgmole-C)	6.915e+007				
Mass Ideal Gas Cp	(kJ/kg-C)	1.825e+006				

Licensed to: PETROCHEMICAL ENGINEERIN
* Specified by user.

Material Stream: FLASH-GAS (continued)

Fluid Package: Basis-1
Property Package: Peng-Robinson

PROPERTIES

	Overall
Bubble Point Pressure (psig)	---

COMPOSITION

Overall Phase

Vapour Fraction ---

COMPONENTS	MOLAR FLOW (kgmole/h)	MOLE FRACTION	MASS FLOW (tonne/d)	MASS FRACTION	LIQUID VOLUME FLOW (m3/h)	LIQUID VOLUME FRACTION
Methane	2.2576 *	0.3334 *	0.8692 *	0.1412 *	0.1210 *	0.2258 *
Ethane	1.1838 *	0.1748 *	0.8543 *	0.1388 *	0.1001 *	0.1868 *
Propane	1.4351 *	0.2120 *	1.5188 *	0.2467 *	0.1249 *	0.2331 *
i-Butane	0.2831 *	0.0418 *	0.3950 *	0.0642 *	0.0293 *	0.0547 *
n-Butane	0.5947 *	0.0878 *	0.8295 *	0.1348 *	0.0593 *	0.1106 *
i-Pentane	0.1287 *	0.0190 *	0.2228 *	0.0362 *	0.0149 *	0.0278 *
n-Pentane	0.1372 *	0.0203 *	0.2376 *	0.0386 *	0.0157 *	0.0293 *
n-Hexane	0.1223 *	0.0181 *	0.2530 *	0.0411 *	0.0159 *	0.0297 *
Nitrogen	0.0260 *	0.0038 *	0.0175 *	0.0028 *	0.0009 *	0.0017 *
CO2	0.2597 *	0.0384 *	0.2743 *	0.0446 *	0.0138 *	0.0258 *
H2S	0.0000 *	0.0000 *	0.0000 *	0.0000 *	0.0000 *	0.0000 *
H2O	0.0116 *	0.0017 *	0.0050 *	0.0008 *	0.0002 *	0.0004 *
NBP[1]95*	0.0492 *	0.0073 *	0.0802 *	0.0130 *	0.0049 *	0.0092 *
NBP[1]121*	0.0494 *	0.0073 *	0.0863 *	0.0140 *	0.0052 *	0.0097 *
NBP[1]147*	0.0493 *	0.0073 *	0.0948 *	0.0154 *	0.0056 *	0.0105 *
NBP[1]171*	0.0691 *	0.0102 *	0.1455 *	0.0236 *	0.0085 *	0.0159 *
NBP[1]195*	0.0624 *	0.0092 *	0.1401 *	0.0228 *	0.0081 *	0.0151 *
NBP[1]222*	0.0278 *	0.0041 *	0.0672 *	0.0109 *	0.0038 *	0.0072 *
NBP[1]248*	0.0135 *	0.0020 *	0.0350 *	0.0057 *	0.0020 *	0.0037 *
NBP[1]273*	0.0061 *	0.0009 *	0.0169 *	0.0027 *	0.0009 *	0.0018 *
NBP[1]299*	0.0026 *	0.0004 *	0.0076 *	0.0012 *	0.0004 *	0.0008 *
NBP[1]325*	0.0010 *	0.0001 *	0.0030 *	0.0005 *	0.0002 *	0.0003 *
NBP[1]351*	0.0004 *	0.0001 *	0.0013 *	0.0002 *	0.0001 *	0.0001 *
NBP[1]377*	0.0002 *	0.0000 *	0.0006 *	0.0001 *	0.0000 *	0.0001 *
NBP[1]402*	0.0001 *	0.0000 *	0.0003 *	0.0000 *	0.0000 *	0.0000 *
NBP[1]428*	0.0000 *	0.0000 *	0.0001 *	0.0000 *	0.0000 *	0.0000 *
NBP[1]454*	0.0000 *	0.0000 *	0.0001 *	0.0000 *	0.0000 *	0.0000 *
NBP[1]480*	0.0000 *	0.0000 *	0.0000 *	0.0000 *	0.0000 *	0.0000 *
NBP[1]505*	0.0000 *	0.0000 *	0.0000 *	0.0000 *	0.0000 *	0.0000 *
NBP[1]531*	0.0000 *	0.0000 *	0.0000 *	0.0000 *	0.0000 *	0.0000 *
NBP[1]557*	0.0000 *	0.0000 *	0.0000 *	0.0000 *	0.0000 *	0.0000 *
NBP[1]582*	0.0000 *	0.0000 *	0.0000 *	0.0000 *	0.0000 *	0.0000 *
NBP[1]608*	0.0000 *	0.0000 *	0.0000 *	0.0000 *	0.0000 *	0.0000 *
NBP[1]634*	0.0000 *	0.0000 *	0.0000 *	0.0000 *	0.0000 *	0.0000 *
NBP[1]659*	0.0000 *	0.0000 *	0.0000 *	0.0000 *	0.0000 *	0.0000 *
NBP[1]685*	0.0000 *	0.0000 *	0.0000 *	0.0000 *	0.0000 *	0.0000 *
NBP[1]711*	0.0000 *	0.0000 *	0.0000 *	0.0000 *	0.0000 *	0.0000 *
NBP[1]736*	0.0000 *	0.0000 *	0.0000 *	0.0000 *	0.0000 *	0.0000 *
NBP[1]762*	0.0000 *	0.0000 *	0.0000 *	0.0000 *	0.0000 *	0.0000 *
NBP[1]788*	0.0000 *	0.0000 *	0.0000 *	0.0000 *	0.0000 *	0.0000 *
NBP[1]825*	0.0000 *	0.0000 *	0.0000 *	0.0000 *	0.0000 *	0.0000 *
NBP[1]873*	0.0000 *	0.0000 *	0.0000 *	0.0000 *	0.0000 *	0.0000 *
NBP[1]926*	0.0000 *	0.0000 *	0.0000 *	0.0000 *	0.0000 *	0.0000 *
NBP[1]978*	0.0000 *	0.0000 *	0.0000 *	0.0000 *	0.0000 *	0.0000 *
NBP[1]1021*	0.0000 *	0.0000 *	0.0000 *	0.0000 *	0.0000 *	0.0000 *
NBP[1]1075*	0.0000 *	0.0000 *	0.0000 *	0.0000 *	0.0000 *	0.0000 *
NBP[1]1123*	0.0000 *	0.0000 *	0.0000 *	0.0000 *	0.0000 *	0.0000 *
NBP[1]1173*	0.0000 *	0.0000 *	0.0000 *	0.0000 *	0.0000 *	0.0000 *
NBP[1]1250*	0.0000 *	0.0000 *	0.0000 *	0.0000 *	0.0000 *	0.0000 *
NBP[1]1339*	0.0000 *	0.0000 *	0.0000 *	0.0000 *	0.0000 *	0.0000 *

Licensed to: PETROCHEMICAL ENGINEERIN
* Specified by user.

Material Stream: FLASH-GAS (continued)

Fluid Package: Basis-1
Property Package: Peng-Robinson

COMPOSITION

Overall Phase (continued)

Vapour Fraction ---

COMPONENTS	MOLAR FLOW (kgmole/h)	MOLE FRACTION	MASS FLOW (tonne/d)	MASS FRACTION	LIQUID VOLUME FLOW (m3/h)	LIQUID VOLUME FRACTION
NBP[1]1432*	0.0000 *	0.0000 *	0.0000 *	0.0000 *	0.0000 *	0.0000 *
NBP[1]1528*	0.0000 *	0.0000 *	0.0000 *	0.0000 *	0.0000 *	0.0000 *
NBP[1]1637*	0.0000 *	0.0000 *	0.0000 *	0.0000 *	0.0000 *	0.0000 *
NBP[1]1732*	0.0000 *	0.0000 *	0.0000 *	0.0000 *	0.0000 *	0.0000 *
NBP[1]1819*	0.0000 *	0.0000 *	0.0000 *	0.0000 *	0.0000 *	0.0000 *
NBP[1]1913*	0.0000 *	0.0000 *	0.0000 *	0.0000 *	0.0000 *	0.0000 *
Total	6.7707	1.0000	6.1561	1.0000	0.5358	1.0000

Material Stream: Gas-PRD

Fluid Package: Basis-1
Property Package: Peng-Robinson

CONDITIONS

		Overall
Vapour / Phase Fraction		---
Temperature:	(F)	---
Pressure:	(psig)	450.0 *
Molar Flow	(MMSCFD)	5.400 *
Mass Flow	(tonne/d)	139.4
Std Ideal Liq Vol Flow	(barrel/day)	2425
Molar Enthalpy	(kJ/kgmole)	---
Molar Entropy	(kJ/kgmole-C)	---
Heat Flow	(MMBtu/hr)	---
Liq Vol Flow @Std Cond	(barrel/day)	9.561e+005 *

PROPERTIES

		Overall
Molecular Weight		21.60
Molar Density	(kgmole/m3)	---
Mass Density	(kg/m3)	---
Act. Volume Flow	(barrel/day)	---
Mass Enthalpy	(kJ/kg)	---
Mass Entropy	(kJ/kg-C)	---
Heat Capacity	(kJ/kgmole-C)	---
Mass Heat Capacity	(kJ/kg-C)	---
LHV Molar Basis (Std)	(Btu/SCF)	1078
LHV Mass Basis (Std)	(kJ/kg)	4.406e+004
Phase Fraction [Vol. Basis]		0.0000
Phase Fraction [Mass Basis]		0.0000
Partial Pressure of CO2	(psig)	-14.70
Cost Based on Flow	(Cost/s)	0.0000
Act. Gas Flow	(ACT_m3/h)	---
Avg. Liq. Density	(kgmole/m3)	16.75
Specific Heat	(kJ/kgmole-C)	---
Std. Gas Flow	(STD_m3/h)	6359
Std. Ideal Liq. Mass Density	(kg/m3)	361.7
Act. Liq. Flow	(barrel/day)	---
Z Factor		---
Watson K		17.22
User Property		---
Partial Pressure of H2S	(psig)	-14.70
Cp/(Cp - R)		---
Cp/Cv		---
Heat of Vap.	(kJ/kgmole)	---
Kinematic Viscosity	(cSt)	---

* Specified by user.

Material Stream: Gas-PRD (continued)

Fluid Package: Basis-1
Property Package: Peng-Robinson

PROPERTIES

	Overall				
Liq. Mass Density (Std. Cond) (kg/m3)	0.9172				
Liq. Vol. Flow (Std. Cond) (barrel/day)	9.561e+005				
Liquid Fraction	---				
Molar Volume (m3/kgmole)	---				
Mass Heat of Vap. (kJ/kg)	---				
Phase Fraction [Molar Basis]	---				
Surface Tension (dyne/cm)	---				
Thermal Conductivity (W/m-K)	---				
Viscosity (cP)	---				
Cv (Semi-Ideal) (kJ/kgmole-C)	---				
Mass Cv (Semi-Ideal) (kJ/kg-C)	---				
Cv (kJ/kgmole-C)	---				
Mass Cv (kJ/kg-C)	---				
Cv (Ent. Method) (kJ/kgmole-C)	---				
Mass Cv (Ent. Method) (kJ/kg-C)	---				
Cp/Cv (Ent. Method)	---				
Reid VP at 37.8 C (psig)	---				
True VP at 37.8 C (psig)	---				
Liq. Vol. Flow - Sum(Std. Cond) (barrel/day)	0.0000				
HHV Molar Basis (Std) (Btu/SCF)	1181				
HHV Mass Basis (Std) (kJ/kg)	4.824e+004				
CO2 Loading	---				
CO2 App ML Con (kgmole/m3)	---				
CO2 App WT Con (kgmol/kg)	1.576e-003				
Phase Fraction [Act. Vol. Basis]	0.0000				
Mass Exergy (kJ/kg)	9.743e+006				
Viscosity Index	---				
Ideal Gas Cp/Cv	1.000				
Ideal Gas Cp (kJ/kgmole-C)	8.446e+007				
Mass Ideal Gas Cp (kJ/kg-C)	3.911e+006				
Bubble Point Pressure (psig)	---				

COMPOSITION

Overall Phase

Vapour Fraction ---

COMPONENTS	MOLAR FLOW (kgmole/h)	MOLE FRACTION	MASS FLOW (tonne/d)	MASS FRACTION	LIQUID VOLUME FLOW (m3/h)	LIQUID VOLUME FRACTION
Methane	204.7864 *	0.7614 *	78.8488 *	0.5656 *	10.9734 *	0.6832 *
Ethane	27.6169 *	0.1027 *	19.9305 *	0.1430 *	2.3348 *	0.1454 *
Propane	13.8326 *	0.0514 *	14.6395 *	0.1050 *	1.2039 *	0.0750 *
i-Butane	1.7456 *	0.0065 *	2.4350 *	0.0175 *	0.1805 *	0.0112 *
n-Butane	3.3566 *	0.0125 *	4.6824 *	0.0336 *	0.3345 *	0.0208 *
i-Pentane	0.7208 *	0.0027 *	1.2482 *	0.0090 *	0.0834 *	0.0052 *
n-Pentane	0.8230 *	0.0031 *	1.4252 *	0.0102 *	0.0943 *	0.0059 *
n-Hexane	1.3475 *	0.0050 *	2.7870 *	0.0200 *	0.1752 *	0.0109 *
Nitrogen	5.5729 *	0.0207 *	3.7467 *	0.0269 *	0.1936 *	0.0121 *
CO2	9.1554 *	0.0340 *	9.6702 *	0.0694 *	0.4882 *	0.0304 *
H2S	0.0005 *	0.0000 *	0.0004 *	0.0000 *	0.0000 *	0.0000 *
H2O	0.0000 *	0.0000 *	0.0000 *	0.0000 *	0.0000 *	0.0000 *
NBP[1]95*	0.0000 *	0.0000 *	0.0000 *	0.0000 *	0.0000 *	0.0000 *
NBP[1]121*	0.0000 *	0.0000 *	0.0000 *	0.0000 *	0.0000 *	0.0000 *
NBP[1]147*	0.0000 *	0.0000 *	0.0000 *	0.0000 *	0.0000 *	0.0000 *
NBP[1]171*	0.0000 *	0.0000 *	0.0000 *	0.0000 *	0.0000 *	0.0000 *
NBP[1]195*	0.0000 *	0.0000 *	0.0000 *	0.0000 *	0.0000 *	0.0000 *
NBP[1]222*	0.0000 *	0.0000 *	0.0000 *	0.0000 *	0.0000 *	0.0000 *
NBP[1]248*	0.0000 *	0.0000 *	0.0000 *	0.0000 *	0.0000 *	0.0000 *
NBP[1]273*	0.0000 *	0.0000 *	0.0000 *	0.0000 *	0.0000 *	0.0000 *

* Specified by user.

Material Stream: Gas-PRD (continued)

Fluid Package: Basis-1
Property Package: Peng-Robinson

COMPOSITION

Overall Phase (continued)

Vapour Fraction ---

COMPONENTS	MOLAR FLOW (kgmole/h)	MOLE FRACTION	MASS FLOW (tonne/d)	MASS FRACTION	LIQUID VOLUME FLOW (m3/h)	LIQUID VOLUME FRACTION
NBP[1]299*	0.0000 *	0.0000 *	0.0000 *	0.0000 *	0.0000 *	0.0000 *
NBP[1]325*	0.0000 *	0.0000 *	0.0000 *	0.0000 *	0.0000 *	0.0000 *
NBP[1]351*	0.0000 *	0.0000 *	0.0000 *	0.0000 *	0.0000 *	0.0000 *
NBP[1]377*	0.0000 *	0.0000 *	0.0000 *	0.0000 *	0.0000 *	0.0000 *
NBP[1]402*	0.0000 *	0.0000 *	0.0000 *	0.0000 *	0.0000 *	0.0000 *
NBP[1]428*	0.0000 *	0.0000 *	0.0000 *	0.0000 *	0.0000 *	0.0000 *
NBP[1]454*	0.0000 *	0.0000 *	0.0000 *	0.0000 *	0.0000 *	0.0000 *
NBP[1]480*	0.0000 *	0.0000 *	0.0000 *	0.0000 *	0.0000 *	0.0000 *
NBP[1]505*	0.0000 *	0.0000 *	0.0000 *	0.0000 *	0.0000 *	0.0000 *
NBP[1]531*	0.0000 *	0.0000 *	0.0000 *	0.0000 *	0.0000 *	0.0000 *
NBP[1]557*	0.0000 *	0.0000 *	0.0000 *	0.0000 *	0.0000 *	0.0000 *
NBP[1]582*	0.0000 *	0.0000 *	0.0000 *	0.0000 *	0.0000 *	0.0000 *
NBP[1]608*	0.0000 *	0.0000 *	0.0000 *	0.0000 *	0.0000 *	0.0000 *
NBP[1]634*	0.0000 *	0.0000 *	0.0000 *	0.0000 *	0.0000 *	0.0000 *
NBP[1]659*	0.0000 *	0.0000 *	0.0000 *	0.0000 *	0.0000 *	0.0000 *
NBP[1]685*	0.0000 *	0.0000 *	0.0000 *	0.0000 *	0.0000 *	0.0000 *
NBP[1]711*	0.0000 *	0.0000 *	0.0000 *	0.0000 *	0.0000 *	0.0000 *
NBP[1]736*	0.0000 *	0.0000 *	0.0000 *	0.0000 *	0.0000 *	0.0000 *
NBP[1]762*	0.0000 *	0.0000 *	0.0000 *	0.0000 *	0.0000 *	0.0000 *
NBP[1]788*	0.0000 *	0.0000 *	0.0000 *	0.0000 *	0.0000 *	0.0000 *
NBP[1]825*	0.0000 *	0.0000 *	0.0000 *	0.0000 *	0.0000 *	0.0000 *
NBP[1]873*	0.0000 *	0.0000 *	0.0000 *	0.0000 *	0.0000 *	0.0000 *
NBP[1]926*	0.0000 *	0.0000 *	0.0000 *	0.0000 *	0.0000 *	0.0000 *
NBP[1]978*	0.0000 *	0.0000 *	0.0000 *	0.0000 *	0.0000 *	0.0000 *
NBP[1]1021*	0.0000 *	0.0000 *	0.0000 *	0.0000 *	0.0000 *	0.0000 *
NBP[1]1075*	0.0000 *	0.0000 *	0.0000 *	0.0000 *	0.0000 *	0.0000 *
NBP[1]1123*	0.0000 *	0.0000 *	0.0000 *	0.0000 *	0.0000 *	0.0000 *
NBP[1]1173*	0.0000 *	0.0000 *	0.0000 *	0.0000 *	0.0000 *	0.0000 *
NBP[1]1250*	0.0000 *	0.0000 *	0.0000 *	0.0000 *	0.0000 *	0.0000 *
NBP[1]1339*	0.0000 *	0.0000 *	0.0000 *	0.0000 *	0.0000 *	0.0000 *
NBP[1]1432*	0.0000 *	0.0000 *	0.0000 *	0.0000 *	0.0000 *	0.0000 *
NBP[1]1528*	0.0000 *	0.0000 *	0.0000 *	0.0000 *	0.0000 *	0.0000 *
NBP[1]1637*	0.0000 *	0.0000 *	0.0000 *	0.0000 *	0.0000 *	0.0000 *
NBP[1]1732*	0.0000 *	0.0000 *	0.0000 *	0.0000 *	0.0000 *	0.0000 *
NBP[1]1819*	0.0000 *	0.0000 *	0.0000 *	0.0000 *	0.0000 *	0.0000 *
NBP[1]1913*	0.0000 *	0.0000 *	0.0000 *	0.0000 *	0.0000 *	0.0000 *
Total	268.9582	1.0000	139.4139	1.0000	16.0619	1.0000

Material Stream: Pandhi

Fluid Package: Basis-1
Property Package: Peng-Robinson

CONDITIONS

		Overall	Vapour Phase	Liquid Phase	Aqueous Phase
Vapour / Phase Fraction		0.6833	0.6833	0.0455	0.2712
Temperature:	(F)	85.00 *	85.00	85.00	85.00
Pressure:	(psig)	450.0 *	450.0	450.0	450.0
Molar Flow	(MMSCFD)	7.874	5.380	0.3586	2.135
Mass Flow	(tonne/d)	237.5	137.5	54.03	46.00
Std Ideal Liq Vol Flow	(barrel/day)	3142	2402	450.0	290.0
Molar Enthalpy	(kJ/kgmole)	-1.516e+005	-8.928e+004	-2.868e+005	-2.859e+005
Molar Entropy	(kJ/kgmole-C)	133.6	159.2	218.5	54.86
Heat Flow	(MMBtu/hr)	-56.34	-22.68	-4.856	-28.81
Liq Vol Flow @Std Cond	(barrel/day)	2.954e+005 *	9.526e+005	434.8	285.1

* Specified by user.

Material Stream: Pandhi (continued)

Fluid Package: Basis-1
Property Package: Peng-Robinson

PROPERTIES

	Overall	Vapour Phase	Liquid Phase	Aqueous Phase
Molecular Weight	25.24	21.38	126.0	18.03
Molar Density (kgmole/m3)	2.032	1.424	6.091	55.76
Mass Density (kg/m3)	51.28	30.45	767.6	1005
Act. Volume Flow (barrel/day)	2.914e+004	2.841e+004	442.7	287.9
Mass Enthalpy (kJ/kg)	-6006	-4175	-2276	-1.586e+004
Mass Entropy (kJ/kg-C)	5.293	7.444	1.734	3.043
Heat Capacity (kJ/kgmole-C)	64.84	47.20	253.3	77.64
Mass Heat Capacity (kJ/kg-C)	2.569	2.207	2.010	4.307
LHV Molar Basis (Std) (Btu/SCF)	---	---	---	1.835e-004
LHV Mass Basis (Std) (kJ/kg)	---	---	---	8.987e-003
Phase Fraction [Vol. Basis]	0.7645	0.7645	0.1432	9.229e-002
Phase Fraction [Mass Basis]	0.5789	0.5789	0.2274	0.1937
Partial Pressure of CO2 (psig)	1.138	---	---	---
Cost Based on Flow (Cost/s)	0.0000	0.0000	0.0000	0.0000
Act. Gas Flow (ACT_m3/h)	188.2	188.2	---	---
Avg. Liq. Density (kgmole/m3)	18.84	16.84	5.992	55.35
Specific Heat (kJ/kgmole-C)	64.84	47.20	253.3	77.64
Std. Gas Flow (STD_m3/h)	9272	6336	422.3	2514
Std. Ideal Liq. Mass Density (kg/m3)	475.5	360.1	755.2	997.8
Act. Liq. Flow (barrel/day)	730.6	---	442.7	287.9
Z Factor	---	0.8944	0.2091	2.284e-002
Watson K	15.58	17.28	11.99	8.497
User Property	---	---	---	---
Partial Pressure of H2S (psig)	-14.70	---	---	---
Cp/(Cp - R)	1.147	1.214	1.034	1.120
Cp/Cv	1.164	1.389	1.034	1.149
Heat of Vap. (kJ/kgmole)	6.864e+004	---	---	---
Kinematic Viscosity (cSt)	---	0.3953	11.77	0.8027
Liq. Mass Density (Std. Cond) (kg/m3)	5.058	0.9080	781.4	1015
Liq. Vol. Flow (Std. Cond) (barrel/day)	2.954e+005	9.526e+005	434.8	285.1
Liquid Fraction	0.3167	0.0000	1.000	1.000
Molar Volume (m3/kgmole)	0.4922	0.7023	0.1642	1.793e-002
Mass Heat of Vap. (kJ/kg)	2720	---	---	---
Phase Fraction [Molar Basis]	0.6833	0.6833	0.0455	0.2712
Surface Tension (dyne/cm)	---	---	15.90	71.30
Thermal Conductivity (W/m-K)	---	3.307e-002	0.1005	0.6175
Viscosity (cP)	---	1.204e-002	9.037	0.8068
Cv (Semi-Ideal) (kJ/kgmole-C)	56.53	38.88	245.0	69.33
Mass Cv (Semi-Ideal) (kJ/kg-C)	2.240	1.818	1.944	3.846
Cv (kJ/kgmole-C)	55.70	33.97	245.0	67.55
Mass Cv (kJ/kg-C)	2.207	1.589	1.944	3.748
Cv (Ent. Method) (kJ/kgmole-C)	---	-3703	---	67.05
Mass Cv (Ent. Method) (kJ/kg-C)	---	-173.2	---	3.720
Cp/Cv (Ent. Method)	---	-1.275e-002	---	1.158
Reid VP at 37.8 C (psig)	3319	---	98.95	---
True VP at 37.8 C (psig)	6318	4184	480.8	17.45
Liq. Vol. Flow - Sum(Std. Cond) (barrel/day)	9.533e+005	9.526e+005	434.8	285.1
HHV Molar Basis (Std) (Btu/SCF)	---	---	---	46.45
HHV Mass Basis (Std) (kJ/kg)	---	---	---	2274
CO2 Loading	---	---	---	---
CO2 App ML Con (kgmole/m3)	---	---	8.249e-002	2.230e-002
CO2 App WT Con (kgmol/kg)	---	---	1.075e-004	2.219e-005
Phase Fraction [Act. Vol. Basis]	0.9749	0.9749	1.519e-002	9.880e-003
Mass Exergy (kJ/kg)	234.0	---	---	---
Viscosity Index	-12.15	---	---	---
Ideal Gas Cp/Cv	1.217	1.249	1.043	1.329
Ideal Gas Cp (kJ/kgmole-C)	46.72	41.73	199.6	33.60

* Specified by user.

Material Stream: Pandhi (continued)

Fluid Package: Basis-1
Property Package: Peng-Robinson

PROPERTIES

	Overall	Vapour Phase	Liquid Phase	Aqueous Phase
Mass Ideal Gas Cp (kJ/kg-C)	1.851	1.951	1.584	1.864
Bubble Point Pressure (psig)	6241	---	---	---

COMPOSITION

Overall Phase

Vapour Fraction 0.6833

COMPONENTS	MOLAR FLOW (kgmole/h)	MOLE FRACTION	MASS FLOW (tonne/d)	MASS FRACTION	LIQUID VOLUME FLOW (m3/h)	LIQUID VOLUME FRACTION
Methane	207.0440	0.5280	79.7181	0.3356	11.0944	0.5330
Ethane	28.8006	0.0734	20.7848	0.0875	2.4348	0.1170
Propane	15.2677	0.0389	16.1583	0.0680	1.3288	0.0638
i-Butane	2.0287	0.0052	2.8300	0.0119	0.2098	0.0101
n-Butane	3.9513	0.0101	5.5120	0.0232	0.3938	0.0189
i-Pentane	0.8495	0.0022	1.4710	0.0062	0.0983	0.0047
n-Pentane	0.9602	0.0024	1.6627	0.0070	0.1100	0.0053
n-Hexane	1.4698	0.0037	3.0399	0.0128	0.1911	0.0092
Nitrogen	5.5989	0.0143	3.7642	0.0158	0.1945	0.0093
CO2	9.4151	0.0240	9.9445	0.0419	0.5020	0.0241
H2S	0.0006	0.0000	0.0005	0.0000	0.0000	0.0000
H2O	106.6990	0.2721	46.1326	0.1942	1.9261	0.0925
NBP[1]95*	0.2883	0.0007	0.4699	0.0020	0.0288	0.0014
NBP[1]121*	0.3381	0.0009	0.5912	0.0025	0.0358	0.0017
NBP[1]147*	0.4314	0.0011	0.8304	0.0035	0.0494	0.0024
NBP[1]171*	0.8224	0.0021	1.7306	0.0073	0.1013	0.0049
NBP[1]195*	1.0758	0.0027	2.4160	0.0102	0.1398	0.0067
NBP[1]222*	0.8003	0.0020	1.9331	0.0081	0.1105	0.0053
NBP[1]248*	0.6657	0.0017	1.7287	0.0073	0.0976	0.0047
NBP[1]273*	0.5358	0.0014	1.4881	0.0063	0.0831	0.0040
NBP[1]299*	0.4185	0.0011	1.2393	0.0052	0.0684	0.0033
NBP[1]325*	0.3029	0.0008	0.9528	0.0040	0.0521	0.0025
NBP[1]351*	0.2456	0.0006	0.8214	0.0035	0.0445	0.0021
NBP[1]377*	0.2247	0.0006	0.8014	0.0034	0.0429	0.0021
NBP[1]402*	0.2061	0.0005	0.7838	0.0033	0.0416	0.0020
NBP[1]428*	0.1961	0.0005	0.7956	0.0033	0.0418	0.0020
NBP[1]454*	0.1956	0.0005	0.8480	0.0036	0.0441	0.0021
NBP[1]480*	0.1982	0.0005	0.9182	0.0039	0.0473	0.0023
NBP[1]505*	0.1920	0.0005	0.9484	0.0040	0.0484	0.0023
NBP[1]531*	0.1852	0.0005	0.9740	0.0041	0.0492	0.0024
NBP[1]557*	0.1784	0.0005	0.9978	0.0042	0.0500	0.0024
NBP[1]582*	0.1706	0.0004	1.0132	0.0043	0.0503	0.0024
NBP[1]608*	0.1643	0.0004	1.0351	0.0044	0.0510	0.0025
NBP[1]634*	0.1611	0.0004	1.0753	0.0045	0.0526	0.0025
NBP[1]659*	0.1586	0.0004	1.1194	0.0047	0.0543	0.0026
NBP[1]685*	0.1641	0.0004	1.2227	0.0051	0.0588	0.0028
NBP[1]711*	0.1715	0.0004	1.3445	0.0057	0.0642	0.0031
NBP[1]736*	0.1697	0.0004	1.3915	0.0059	0.0659	0.0032
NBP[1]762*	0.1653	0.0004	1.4214	0.0060	0.0669	0.0032
NBP[1]788*	0.1585	0.0004	1.4424	0.0061	0.0674	0.0032
NBP[1]825*	0.2655	0.0007	2.5963	0.0109	0.1201	0.0058
NBP[1]873*	0.1830	0.0005	1.9404	0.0082	0.0887	0.0043
NBP[1]926*	0.1437	0.0004	1.6472	0.0069	0.0744	0.0036
NBP[1]978*	0.1474	0.0004	1.8524	0.0078	0.0825	0.0040
NBP[1]1021*	0.0728	0.0002	0.9655	0.0041	0.0426	0.0020
NBP[1]1075*	0.0449	0.0001	0.6310	0.0027	0.0276	0.0013
NBP[1]1123*	0.0417	0.0001	0.6267	0.0026	0.0271	0.0013
NBP[1]1173*	0.0300	0.0001	0.4772	0.0020	0.0205	0.0010
NBP[1]1250*	0.0393	0.0001	0.6767	0.0028	0.0287	0.0014

Licensed to: PETROCHEMICAL ENGINEERIN
* Specified by user.

Material Stream: Pandhi (continued)

Fluid Package: Basis-1
Property Package: Peng-Robinson

COMPOSITION

Overall Phase (continued)

Vapour Fraction 0.6833

COMPONENTS	MOLAR FLOW (kgmole/h)	MOLE FRACTION	MASS FLOW (tonne/d)	MASS FRACTION	LIQUID VOLUME FLOW (m3/h)	LIQUID VOLUME FRACTION
NBP[1]1339*	0.0364	0.0001	0.6999	0.0029	0.0291	0.0014
NBP[1]1432*	0.0257	0.0001	0.5397	0.0023	0.0221	0.0011
NBP[1]1528*	0.0180	0.0000	0.4082	0.0017	0.0165	0.0008
NBP[1]1637*	0.0127	0.0000	0.3047	0.0013	0.0122	0.0006
NBP[1]1732*	0.0101	0.0000	0.2565	0.0011	0.0101	0.0005
NBP[1]1819*	0.0097	0.0000	0.2590	0.0011	0.0101	0.0005
NBP[1]1913*	0.0112	0.0000	0.3148	0.0013	0.0121	0.0006
Total	392.1623	1.0000	237.5489	1.0000	20.8162	1.0000

Vapour Phase

Phase Fraction 0.6833

COMPONENTS	MOLAR FLOW (kgmole/h)	MOLE FRACTION	MASS FLOW (tonne/d)	MASS FRACTION	LIQUID VOLUME FLOW (m3/h)	LIQUID VOLUME FRACTION
Methane	204.9954	0.7650	78.9293	0.5739	10.9846	0.6902
Ethane	27.6428	0.1032	19.9492	0.1451	2.3370	0.1468
Propane	13.5786	0.0507	14.3706	0.1045	1.1818	0.0743
i-Butane	1.5846	0.0059	2.2105	0.0161	0.1639	0.0103
n-Butane	2.8799	0.0107	4.0174	0.0292	0.2870	0.0180
i-Pentane	0.4627	0.0017	0.8013	0.0058	0.0536	0.0034
n-Pentane	0.4645	0.0017	0.8044	0.0058	0.0532	0.0033
n-Hexane	0.3692	0.0014	0.7636	0.0056	0.0480	0.0030
Nitrogen	5.5749	0.0208	3.7480	0.0273	0.1937	0.0122
CO2	9.1306	0.0341	9.6441	0.0701	0.4869	0.0306
H2S	0.0005	0.0000	0.0004	0.0000	0.0000	0.0000
H2O	0.3934	0.0015	0.1701	0.0012	0.0071	0.0004
NBP[1]95*	0.1423	0.0005	0.2320	0.0017	0.0142	0.0009
NBP[1]121*	0.1317	0.0005	0.2302	0.0017	0.0139	0.0009
NBP[1]147*	0.1253	0.0005	0.2411	0.0018	0.0143	0.0009
NBP[1]171*	0.1732	0.0006	0.3645	0.0027	0.0213	0.0013
NBP[1]195*	0.1580	0.0006	0.3548	0.0026	0.0205	0.0013
NBP[1]222*	0.0733	0.0003	0.1771	0.0013	0.0101	0.0006
NBP[1]248*	0.0376	0.0001	0.0977	0.0007	0.0055	0.0003
NBP[1]273*	0.0182	0.0001	0.0505	0.0004	0.0028	0.0002
NBP[1]299*	0.0083	0.0000	0.0246	0.0002	0.0014	0.0001
NBP[1]325*	0.0034	0.0000	0.0106	0.0001	0.0006	0.0000
NBP[1]351*	0.0015	0.0000	0.0050	0.0000	0.0003	0.0000
NBP[1]377*	0.0007	0.0000	0.0026	0.0000	0.0001	0.0000
NBP[1]402*	0.0003	0.0000	0.0013	0.0000	0.0001	0.0000
NBP[1]428*	0.0002	0.0000	0.0007	0.0000	0.0000	0.0000
NBP[1]454*	0.0001	0.0000	0.0004	0.0000	0.0000	0.0000
NBP[1]480*	0.0000	0.0000	0.0002	0.0000	0.0000	0.0000
NBP[1]505*	0.0000	0.0000	0.0001	0.0000	0.0000	0.0000
NBP[1]531*	0.0000	0.0000	0.0000	0.0000	0.0000	0.0000
NBP[1]557*	0.0000	0.0000	0.0000	0.0000	0.0000	0.0000
NBP[1]582*	0.0000	0.0000	0.0000	0.0000	0.0000	0.0000
NBP[1]608*	0.0000	0.0000	0.0000	0.0000	0.0000	0.0000
NBP[1]634*	0.0000	0.0000	0.0000	0.0000	0.0000	0.0000
NBP[1]659*	0.0000	0.0000	0.0000	0.0000	0.0000	0.0000
NBP[1]685*	0.0000	0.0000	0.0000	0.0000	0.0000	0.0000
NBP[1]711*	0.0000	0.0000	0.0000	0.0000	0.0000	0.0000
NBP[1]736*	0.0000	0.0000	0.0000	0.0000	0.0000	0.0000
NBP[1]762*	0.0000	0.0000	0.0000	0.0000	0.0000	0.0000
NBP[1]788*	0.0000	0.0000	0.0000	0.0000	0.0000	0.0000
NBP[1]825*	0.0000	0.0000	0.0000	0.0000	0.0000	0.0000
NBP[1]873*	0.0000	0.0000	0.0000	0.0000	0.0000	0.0000

* Specified by user.

Material Stream: Pandhi (continued)

Fluid Package: Basis-1
Property Package: Peng-Robinson

COMPOSITION

Vapour Phase (continued)

Phase Fraction 0.6833

COMPONENTS	MOLAR FLOW (kgmole/h)	MOLE FRACTION	MASS FLOW (tonne/d)	MASS FRACTION	LIQUID VOLUME FLOW (m3/h)	LIQUID VOLUME FRACTION
NBP[1]926*	0.0000	0.0000	0.0000	0.0000	0.0000	0.0000
NBP[1]978*	0.0000	0.0000	0.0000	0.0000	0.0000	0.0000
NBP[1]1021*	0.0000	0.0000	0.0000	0.0000	0.0000	0.0000
NBP[1]1075*	0.0000	0.0000	0.0000	0.0000	0.0000	0.0000
NBP[1]1123*	0.0000	0.0000	0.0000	0.0000	0.0000	0.0000
NBP[1]1173*	0.0000	0.0000	0.0000	0.0000	0.0000	0.0000
NBP[1]1250*	0.0000	0.0000	0.0000	0.0000	0.0000	0.0000
NBP[1]1339*	0.0000	0.0000	0.0000	0.0000	0.0000	0.0000
NBP[1]1432*	0.0000	0.0000	0.0000	0.0000	0.0000	0.0000
NBP[1]1528*	0.0000	0.0000	0.0000	0.0000	0.0000	0.0000
NBP[1]1637*	0.0000	0.0000	0.0000	0.0000	0.0000	0.0000
NBP[1]1732*	0.0000	0.0000	0.0000	0.0000	0.0000	0.0000
NBP[1]1819*	0.0001	0.0000	0.0033	0.0000	0.0001	0.0000
NBP[1]1913*	0.0112	0.0000	0.3148	0.0023	0.0121	0.0008
Total	267.9625	1.0000	137.5201	1.0000	15.9142	1.0000

Liquid Phase

Phase Fraction 4.555e-002

COMPONENTS	MOLAR FLOW (kgmole/h)	MOLE FRACTION	MASS FLOW (tonne/d)	MASS FRACTION	LIQUID VOLUME FLOW (m3/h)	LIQUID VOLUME FRACTION
Methane	2.0486	0.1147	0.7888	0.0146	0.1098	0.0368
Ethane	1.1578	0.0648	0.8356	0.0155	0.0979	0.0328
Propane	1.6892	0.0946	1.7877	0.0331	0.1470	0.0493
i-Butane	0.4441	0.0249	0.6195	0.0115	0.0459	0.0154
n-Butane	1.0714	0.0600	1.4946	0.0277	0.1068	0.0358
i-Pentane	0.3868	0.0217	0.6697	0.0124	0.0448	0.0150
n-Pentane	0.4957	0.0278	0.8584	0.0159	0.0568	0.0191
n-Hexane	1.1006	0.0616	2.2764	0.0421	0.1431	0.0480
Nitrogen	0.0232	0.0013	0.0156	0.0003	0.0008	0.0003
CO2	0.2419	0.0135	0.2555	0.0047	0.0129	0.0043
H2S	0.0000	0.0000	0.0000	0.0000	0.0000	0.0000
H2O	0.0108	0.0006	0.0047	0.0001	0.0002	0.0001
NBP[1]95*	0.1460	0.0082	0.2380	0.0044	0.0146	0.0049
NBP[1]121*	0.2065	0.0116	0.3610	0.0067	0.0218	0.0073
NBP[1]147*	0.3062	0.0171	0.5893	0.0109	0.0350	0.0118
NBP[1]171*	0.6492	0.0363	1.3661	0.0253	0.0800	0.0268
NBP[1]195*	0.9178	0.0514	2.0612	0.0382	0.1193	0.0400
NBP[1]222*	0.7270	0.0407	1.7560	0.0325	0.1004	0.0337
NBP[1]248*	0.6280	0.0352	1.6311	0.0302	0.0921	0.0309
NBP[1]273*	0.5176	0.0290	1.4376	0.0266	0.0803	0.0269
NBP[1]299*	0.4102	0.0230	1.2147	0.0225	0.0671	0.0225
NBP[1]325*	0.2995	0.0168	0.9422	0.0174	0.0515	0.0173
NBP[1]351*	0.2441	0.0137	0.8164	0.0151	0.0442	0.0148
NBP[1]377*	0.2240	0.0125	0.7988	0.0148	0.0428	0.0144
NBP[1]402*	0.2058	0.0115	0.7825	0.0145	0.0415	0.0139
NBP[1]428*	0.1959	0.0110	0.7949	0.0147	0.0417	0.0140
NBP[1]454*	0.1955	0.0109	0.8477	0.0157	0.0441	0.0148
NBP[1]480*	0.1981	0.0111	0.9180	0.0170	0.0473	0.0159
NBP[1]505*	0.1920	0.0107	0.9483	0.0176	0.0484	0.0162
NBP[1]531*	0.1852	0.0104	0.9740	0.0180	0.0492	0.0165
NBP[1]557*	0.1784	0.0100	0.9978	0.0185	0.0500	0.0168
NBP[1]582*	0.1706	0.0095	1.0132	0.0188	0.0503	0.0169
NBP[1]608*	0.1643	0.0092	1.0351	0.0192	0.0510	0.0171
NBP[1]634*	0.1611	0.0090	1.0753	0.0199	0.0526	0.0176
NBP[1]659*	0.1586	0.0089	1.1194	0.0207	0.0543	0.0182

* Specified by user.

Material Stream: Pandhi (continued)

Fluid Package: Basis-1
Property Package: Peng-Robinson

COMPOSITION

Liquid Phase (continued)

Phase Fraction 4.555e-002

COMPONENTS	MOLAR FLOW (kgmole/h)	MOLE FRACTION	MASS FLOW (tonne/d)	MASS FRACTION	LIQUID VOLUME FLOW (m3/h)	LIQUID VOLUME FRACTION
NBP[1]685*	0.1641	0.0092	1.2227	0.0226	0.0588	0.0197
NBP[1]711*	0.1715	0.0096	1.3445	0.0249	0.0642	0.0215
NBP[1]736*	0.1697	0.0095	1.3915	0.0258	0.0659	0.0221
NBP[1]762*	0.1653	0.0093	1.4214	0.0263	0.0669	0.0224
NBP[1]788*	0.1585	0.0089	1.4424	0.0267	0.0674	0.0226
NBP[1]825*	0.2655	0.0149	2.5963	0.0481	0.1201	0.0403
NBP[1]873*	0.1830	0.0102	1.9404	0.0359	0.0887	0.0298
NBP[1]926*	0.1437	0.0080	1.6472	0.0305	0.0744	0.0250
NBP[1]978*	0.1474	0.0082	1.8524	0.0343	0.0825	0.0277
NBP[1]1021*	0.0728	0.0041	0.9655	0.0179	0.0426	0.0143
NBP[1]1075*	0.0449	0.0025	0.6310	0.0117	0.0276	0.0093
NBP[1]1123*	0.0417	0.0023	0.6267	0.0116	0.0271	0.0091
NBP[1]1173*	0.0300	0.0017	0.4772	0.0088	0.0205	0.0069
NBP[1]1250*	0.0393	0.0022	0.6767	0.0125	0.0287	0.0096
NBP[1]1339*	0.0364	0.0020	0.6999	0.0130	0.0291	0.0098
NBP[1]1432*	0.0257	0.0014	0.5397	0.0100	0.0221	0.0074
NBP[1]1528*	0.0180	0.0010	0.4082	0.0076	0.0165	0.0055
NBP[1]1637*	0.0127	0.0007	0.3047	0.0056	0.0122	0.0041
NBP[1]1732*	0.0101	0.0006	0.2565	0.0047	0.0101	0.0034
NBP[1]1819*	0.0096	0.0005	0.2557	0.0047	0.0100	0.0033
NBP[1]1913*	0.0000	0.0000	0.0000	0.0000	0.0000	0.0000
Total	17.8617	1.0000	54.0255	1.0000	2.9809	1.0000

Aqueous Phase

Phase Fraction 0.2712

COMPONENTS	MOLAR FLOW (kgmole/h)	MOLE FRACTION	MASS FLOW (tonne/d)	MASS FRACTION	LIQUID VOLUME FLOW (m3/h)	LIQUID VOLUME FRACTION
Methane	0.0000	0.0000	0.0000	0.0000	0.0000	0.0000
Ethane	0.0000	0.0000	0.0000	0.0000	0.0000	0.0000
Propane	0.0000	0.0000	0.0000	0.0000	0.0000	0.0000
i-Butane	0.0000	0.0000	0.0000	0.0000	0.0000	0.0000
n-Butane	0.0000	0.0000	0.0000	0.0000	0.0000	0.0000
i-Pentane	0.0000	0.0000	0.0000	0.0000	0.0000	0.0000
n-Pentane	0.0000	0.0000	0.0000	0.0000	0.0000	0.0000
n-Hexane	0.0000	0.0000	0.0000	0.0000	0.0000	0.0000
Nitrogen	0.0008	0.0000	0.0006	0.0000	0.0000	0.0000
CO2	0.0425	0.0004	0.0449	0.0010	0.0023	0.0012
H2S	0.0000	0.0000	0.0000	0.0000	0.0000	0.0000
H2O	106.2948	0.9996	45.9579	0.9990	1.9188	0.9988
NBP[1]95*	0.0000	0.0000	0.0000	0.0000	0.0000	0.0000
NBP[1]121*	0.0000	0.0000	0.0000	0.0000	0.0000	0.0000
NBP[1]147*	0.0000	0.0000	0.0000	0.0000	0.0000	0.0000
NBP[1]171*	0.0000	0.0000	0.0000	0.0000	0.0000	0.0000
NBP[1]195*	0.0000	0.0000	0.0000	0.0000	0.0000	0.0000
NBP[1]222*	0.0000	0.0000	0.0000	0.0000	0.0000	0.0000
NBP[1]248*	0.0000	0.0000	0.0000	0.0000	0.0000	0.0000
NBP[1]273*	0.0000	0.0000	0.0000	0.0000	0.0000	0.0000
NBP[1]299*	0.0000	0.0000	0.0000	0.0000	0.0000	0.0000
NBP[1]325*	0.0000	0.0000	0.0000	0.0000	0.0000	0.0000
NBP[1]351*	0.0000	0.0000	0.0000	0.0000	0.0000	0.0000
NBP[1]377*	0.0000	0.0000	0.0000	0.0000	0.0000	0.0000
NBP[1]402*	0.0000	0.0000	0.0000	0.0000	0.0000	0.0000
NBP[1]428*	0.0000	0.0000	0.0000	0.0000	0.0000	0.0000
NBP[1]454*	0.0000	0.0000	0.0000	0.0000	0.0000	0.0000
NBP[1]480*	0.0000	0.0000	0.0000	0.0000	0.0000	0.0000

* Specified by user.

Material Stream: Pandhi (continued)

Fluid Package: Basis-1
Property Package: Peng-Robinson

COMPOSITION

Aqueous Phase (continued)

Phase Fraction 0.2712

COMPONENTS	MOLAR FLOW (kgmole/h)	MOLE FRACTION	MASS FLOW (tonne/d)	MASS FRACTION	LIQUID VOLUME FLOW (m3/h)	LIQUID VOLUME FRACTION
NBP[1]505*	0.0000	0.0000	0.0000	0.0000	0.0000	0.0000
NBP[1]531*	0.0000	0.0000	0.0000	0.0000	0.0000	0.0000
NBP[1]557*	0.0000	0.0000	0.0000	0.0000	0.0000	0.0000
NBP[1]582*	0.0000	0.0000	0.0000	0.0000	0.0000	0.0000
NBP[1]608*	0.0000	0.0000	0.0000	0.0000	0.0000	0.0000
NBP[1]634*	0.0000	0.0000	0.0000	0.0000	0.0000	0.0000
NBP[1]659*	0.0000	0.0000	0.0000	0.0000	0.0000	0.0000
NBP[1]685*	0.0000	0.0000	0.0000	0.0000	0.0000	0.0000
NBP[1]711*	0.0000	0.0000	0.0000	0.0000	0.0000	0.0000
NBP[1]736*	0.0000	0.0000	0.0000	0.0000	0.0000	0.0000
NBP[1]762*	0.0000	0.0000	0.0000	0.0000	0.0000	0.0000
NBP[1]788*	0.0000	0.0000	0.0000	0.0000	0.0000	0.0000
NBP[1]825*	0.0000	0.0000	0.0000	0.0000	0.0000	0.0000
NBP[1]873*	0.0000	0.0000	0.0000	0.0000	0.0000	0.0000
NBP[1]926*	0.0000	0.0000	0.0000	0.0000	0.0000	0.0000
NBP[1]978*	0.0000	0.0000	0.0000	0.0000	0.0000	0.0000
NBP[1]1021*	0.0000	0.0000	0.0000	0.0000	0.0000	0.0000
NBP[1]1075*	0.0000	0.0000	0.0000	0.0000	0.0000	0.0000
NBP[1]1123*	0.0000	0.0000	0.0000	0.0000	0.0000	0.0000
NBP[1]1173*	0.0000	0.0000	0.0000	0.0000	0.0000	0.0000
NBP[1]1250*	0.0000	0.0000	0.0000	0.0000	0.0000	0.0000
NBP[1]1339*	0.0000	0.0000	0.0000	0.0000	0.0000	0.0000
NBP[1]1432*	0.0000	0.0000	0.0000	0.0000	0.0000	0.0000
NBP[1]1528*	0.0000	0.0000	0.0000	0.0000	0.0000	0.0000
NBP[1]1637*	0.0000	0.0000	0.0000	0.0000	0.0000	0.0000
NBP[1]1732*	0.0000	0.0000	0.0000	0.0000	0.0000	0.0000
NBP[1]1819*	0.0000	0.0000	0.0000	0.0000	0.0000	0.0000
NBP[1]1913*	0.0000	0.0000	0.0000	0.0000	0.0000	0.0000
Total	106.3381	1.0000	46.0033	1.0000	1.9211	1.0000

Material Stream: PANDHI oil

Fluid Package: Basis-1
Property Package: Peng-Robinson

CONDITIONS

		Overall
Vapour / Phase Fraction		---
Temperature:	(F)	---
Pressure:	(psig)	450.0 *
Molar Flow	(MMSCFD)	0.1957
Mass Flow	(tonne/d)	45.85
Std Ideal Liq Vol Flow	(barrel/day)	346.1
Molar Enthalpy	(kJ/kgmole)	---
Molar Entropy	(kJ/kgmole-C)	---
Heat Flow	(MMBtu/hr)	---
Liq Vol Flow @Std Cond	(barrel/day)	346.1 *

PROPERTIES

		Overall
Molecular Weight		196.0
Molar Density	(kgmole/m3)	---
Mass Density	(kg/m3)	---
Act. Volume Flow	(barrel/day)	---
Mass Enthalpy	(kJ/kg)	---
Mass Entropy	(kJ/kg-C)	---

* Specified by user.

Material Stream: PANDHI oil (continued)

Fluid Package: Basis-1
Property Package: Peng-Robinson

PROPERTIES

		Overall				
Heat Capacity	(kJ/kgmole-C)	---				
Mass Heat Capacity	(kJ/kg-C)	---				
LHV Molar Basis (Std)	(Btu/SCF)	---				
LHV Mass Basis (Std)	(kJ/kg)	---				
Phase Fraction [Vol. Basis]		0.0000				
Phase Fraction [Mass Basis]		0.0000				
Partial Pressure of CO2	(psig)	-14.70				
Cost Based on Flow	(Cost/s)	0.0000				
Act. Gas Flow	(ACT_m3/h)	---				
Avg. Liq. Density	(kgmole/m3)	4.251				
Specific Heat	(kJ/kgmole-C)	---				
Std. Gas Flow	(STD_m3/h)	230.4				
Std. Ideal Liq. Mass Density	(kg/m3)	833.3				
Act. Liq. Flow	(barrel/day)	---				
Z Factor		---				
Watson K		11.77				
User Property		---				
Partial Pressure of H2S	(psig)	-14.70				
Cp/(Cp - R)		---				
Cp/Cv		---				
Heat of Vap.	(kJ/kgmole)	---				
Kinematic Viscosity	(cSt)	---				
Liq. Mass Density (Std. Cond)	(kg/m3)	833.3				
Liq. Vol. Flow (Std. Cond)	(barrel/day)	346.1				
Liquid Fraction		---				
Molar Volume	(m3/kgmole)	---				
Mass Heat of Vap.	(kJ/kg)	---				
Phase Fraction [Molar Basis]		---				
Surface Tension	(dyne/cm)	---				
Thermal Conductivity	(W/m-K)	---				
Viscosity	(cP)	---				
Cv (Semi-Ideal)	(kJ/kgmole-C)	---				
Mass Cv (Semi-Ideal)	(kJ/kg-C)	---				
Cv	(kJ/kgmole-C)	---				
Mass Cv	(kJ/kg-C)	---				
Cv (Ent. Method)	(kJ/kgmole-C)	---				
Mass Cv (Ent. Method)	(kJ/kg-C)	---				
Cp/Cv (Ent. Method)		---				
Reid VP at 37.8 C	(psig)	---				
True VP at 37.8 C	(psig)	---				
Liq. Vol. Flow - Sum(Std. Cond)	(barrel/day)	0.0000				
HHV Molar Basis (Std)	(Btu/SCF)	---				
HHV Mass Basis (Std)	(kJ/kg)	---				
CO2 Loading		---				
CO2 App ML Con	(kgmole/m3)	---				
CO2 App WT Con	(kgmol/kg)	0.0000				
Phase Fraction [Act. Vol. Basis]		0.0000				
Mass Exergy	(kJ/kg)	9.739e+006				
Viscosity Index		---				
Ideal Gas Cp/Cv		1.000				
Ideal Gas Cp	(kJ/kgmole-C)	-5.304e+005				
Mass Ideal Gas Cp	(kJ/kg-C)	-2706				
Bubble Point Pressure	(psig)	---				

* Specified by user.

Material Stream: PANDHI oil (continued)

Fluid Package: Basis-1
Property Package: Peng-Robinson

COMPOSITION

Overall Phase

Vapour Fraction ---

COMPONENTS	MOLAR FLOW (kgmole/h)	MOLE FRACTION	MASS FLOW (tonne/d)	MASS FRACTION	LIQUID VOLUME FLOW (m3/h)	LIQUID VOLUME FRACTION
Methane	0.0000 *	0.0000 *	0.0000 *	0.0000 *	0.0000 *	0.0000 *
Ethane	0.0000 *	0.0000 *	0.0000 *	0.0000 *	0.0000 *	0.0000 *
Propane	0.0000 *	0.0000 *	0.0000 *	0.0000 *	0.0000 *	0.0000 *
i-Butane	0.0000 *	0.0000 *	0.0000 *	0.0000 *	0.0000 *	0.0000 *
n-Butane	0.0000 *	0.0000 *	0.0000 *	0.0000 *	0.0000 *	0.0000 *
i-Pentane	0.0000 *	0.0000 *	0.0000 *	0.0000 *	0.0000 *	0.0000 *
n-Pentane	0.0000 *	0.0000 *	0.0000 *	0.0000 *	0.0000 *	0.0000 *
n-Hexane	0.0000 *	0.0000 *	0.0000 *	0.0000 *	0.0000 *	0.0000 *
Nitrogen	0.0000 *	0.0000 *	0.0000 *	0.0000 *	0.0000 *	0.0000 *
CO2	0.0000 *	0.0000 *	0.0000 *	0.0000 *	0.0000 *	0.0000 *
H2S	0.0000 *	0.0000 *	0.0000 *	0.0000 *	0.0000 *	0.0000 *
H2O	0.0000 *	0.0000 *	0.0000 *	0.0000 *	0.0000 *	0.0000 *
NBP[1]95*	0.2390 *	0.0245 *	0.3897 *	0.0085 *	0.0239 *	0.0104 *
NBP[1]121*	0.2888 *	0.0296 *	0.5049 *	0.0110 *	0.0305 *	0.0133 *
NBP[1]147*	0.3822 *	0.0392 *	0.7356 *	0.0160 *	0.0437 *	0.0191 *
NBP[1]171*	0.7533 *	0.0773 *	1.5851 *	0.0346 *	0.0928 *	0.0405 *
NBP[1]195*	1.0134 *	0.1040 *	2.2759 *	0.0496 *	0.1317 *	0.0574 *
NBP[1]222*	0.7725 *	0.0793 *	1.8658 *	0.0407 *	0.1066 *	0.0465 *
NBP[1]248*	0.6522 *	0.0669 *	1.6937 *	0.0369 *	0.0956 *	0.0417 *
NBP[1]273*	0.5297 *	0.0544 *	1.4712 *	0.0321 *	0.0821 *	0.0358 *
NBP[1]299*	0.4159 *	0.0427 *	1.2317 *	0.0269 *	0.0680 *	0.0297 *
NBP[1]325*	0.3019 *	0.0310 *	0.9498 *	0.0207 *	0.0519 *	0.0227 *
NBP[1]351*	0.2452 *	0.0252 *	0.8201 *	0.0179 *	0.0444 *	0.0194 *
NBP[1]377*	0.2246 *	0.0230 *	0.8008 *	0.0175 *	0.0429 *	0.0187 *
NBP[1]402*	0.2060 *	0.0211 *	0.7836 *	0.0171 *	0.0416 *	0.0181 *
NBP[1]428*	0.1960 *	0.0201 *	0.7954 *	0.0173 *	0.0418 *	0.0182 *
NBP[1]454*	0.1956 *	0.0201 *	0.8479 *	0.0185 *	0.0441 *	0.0192 *
NBP[1]480*	0.1982 *	0.0203 *	0.9181 *	0.0200 *	0.0473 *	0.0206 *
NBP[1]505*	0.1920 *	0.0197 *	0.9484 *	0.0207 *	0.0484 *	0.0211 *
NBP[1]531*	0.1852 *	0.0190 *	0.9740 *	0.0212 *	0.0492 *	0.0215 *
NBP[1]557*	0.1784 *	0.0183 *	0.9978 *	0.0218 *	0.0500 *	0.0218 *
NBP[1]582*	0.1706 *	0.0175 *	1.0132 *	0.0221 *	0.0503 *	0.0220 *
NBP[1]608*	0.1643 *	0.0169 *	1.0351 *	0.0226 *	0.0510 *	0.0222 *
NBP[1]634*	0.1611 *	0.0165 *	1.0753 *	0.0235 *	0.0526 *	0.0229 *
NBP[1]659*	0.1586 *	0.0163 *	1.1194 *	0.0244 *	0.0543 *	0.0237 *
NBP[1]685*	0.1641 *	0.0168 *	1.2227 *	0.0267 *	0.0588 *	0.0257 *
NBP[1]711*	0.1715 *	0.0176 *	1.3445 *	0.0293 *	0.0642 *	0.0280 *
NBP[1]736*	0.1697 *	0.0174 *	1.3915 *	0.0303 *	0.0659 *	0.0288 *
NBP[1]762*	0.1653 *	0.0170 *	1.4214 *	0.0310 *	0.0669 *	0.0292 *
NBP[1]788*	0.1585 *	0.0163 *	1.4424 *	0.0315 *	0.0674 *	0.0294 *
NBP[1]825*	0.2655 *	0.0272 *	2.5963 *	0.0566 *	0.1201 *	0.0524 *
NBP[1]873*	0.1830 *	0.0188 *	1.9404 *	0.0423 *	0.0887 *	0.0387 *
NBP[1]926*	0.1437 *	0.0147 *	1.6472 *	0.0359 *	0.0744 *	0.0325 *
NBP[1]978*	0.1474 *	0.0151 *	1.8524 *	0.0404 *	0.0825 *	0.0360 *
NBP[1]1021*	0.0728 *	0.0075 *	0.9655 *	0.0211 *	0.0426 *	0.0186 *
NBP[1]1075*	0.0449 *	0.0046 *	0.6310 *	0.0138 *	0.0276 *	0.0120 *
NBP[1]1123*	0.0417 *	0.0043 *	0.6267 *	0.0137 *	0.0271 *	0.0118 *
NBP[1]1173*	0.0300 *	0.0031 *	0.4772 *	0.0104 *	0.0205 *	0.0089 *
NBP[1]1250*	0.0393 *	0.0040 *	0.6767 *	0.0148 *	0.0287 *	0.0125 *
NBP[1]1339*	0.0364 *	0.0037 *	0.6999 *	0.0153 *	0.0291 *	0.0127 *
NBP[1]1432*	0.0257 *	0.0026 *	0.5397 *	0.0118 *	0.0221 *	0.0097 *
NBP[1]1528*	0.0180 *	0.0018 *	0.4082 *	0.0089 *	0.0165 *	0.0072 *
NBP[1]1637*	0.0127 *	0.0013 *	0.3047 *	0.0066 *	0.0122 *	0.0053 *
NBP[1]1732*	0.0101 *	0.0010 *	0.2565 *	0.0056 *	0.0101 *	0.0044 *

Licensed to: PETROCHEMICAL ENGINEERIN
* Specified by user.

Material Stream: PANDHI oil (continued)

Fluid Package: Basis-1
Property Package: Peng-Robinson

COMPOSITION

Overall Phase (continued)

Vapour Fraction ---

COMPONENTS	MOLAR FLOW (kgmole/h)	MOLE FRACTION	MASS FLOW (tonne/d)	MASS FRACTION	LIQUID VOLUME FLOW (m3/h)	LIQUID VOLUME FRACTION
NBP[1]1819*	0.0097 *	0.0010 *	0.2590 *	0.0056 *	0.0101 *	0.0044 *
NBP[1]1913*	0.0112 *	0.0011 *	0.3148 *	0.0069 *	0.0121 *	0.0053 *
Total	9.7460	1.0000	45.8513	1.0000	2.2926	1.0000

Material Stream: Pandhi-C

Fluid Package: Basis-1
Property Package: Peng-Robinson

CONDITIONS

	Overall	Vapour Phase	Liquid Phase	Aqueous Phase
Vapour / Phase Fraction	0.0000	0.0000	1.0000	0.0000
Temperature: (F)	84.79	84.79	84.79	84.79
Pressure: (psig)	445.0	445.0	445.0	445.0
Molar Flow (MMSCFD)	0.3574	0.0000	0.3574	0.0000
Mass Flow (tonne/d)	53.98	0.0000	53.98	0.0000
Std Ideal Liq Vol Flow (barrel/day)	449.3	0.0000	449.3	0.0000
Molar Enthalpy (kJ/kgmole)	-2.875e+005	-8.928e+004	-2.875e+005	-2.859e+005
Molar Entropy (kJ/kgmole-C)	218.7	159.3	218.7	54.83
Heat Flow (MMBtu/hr)	-4.850	0.0000	-4.850	0.0000
Liq Vol Flow @Std Cond (barrel/day)	434.3 *	0.0000	434.3	0.0000

PROPERTIES

	Overall	Vapour Phase	Liquid Phase	Aqueous Phase
Molecular Weight	126.4	21.39	126.4	18.03
Molar Density (kgmole/m3)	6.079	1.408	6.079	55.76
Mass Density (kg/m3)	768.1	30.10	768.1	1005
Act. Volume Flow (barrel/day)	442.0	0.0000	442.0	0.0000
Mass Enthalpy (kJ/kg)	-2275	-4175	-2275	-1.586e+004
Mass Entropy (kJ/kg-C)	1.731	7.448	1.731	3.042
Heat Capacity (kJ/kgmole-C)	253.8	47.13	253.8	77.64
Mass Heat Capacity (kJ/kg-C)	2.009	2.204	2.009	4.307
LHV Molar Basis (Std) (Btu/SCF)	---	---	---	1.809e-004
LHV Mass Basis (Std) (kJ/kg)	---	---	---	8.858e-003
Phase Fraction [Vol. Basis]	---	---	1.000	---
Phase Fraction [Mass Basis]	0.0000	0.0000	1.000	0.0000
Partial Pressure of CO2 (psig)	-14.70	---	---	---
Cost Based on Flow (Cost/s)	0.0000	0.0000	0.0000	0.0000
Act. Gas Flow (ACT_m3/h)	---	---	---	---
Avg. Liq. Density (kgmole/m3)	5.980	16.84	5.980	55.35
Specific Heat (kJ/kgmole-C)	253.8	47.13	253.8	77.64
Std. Gas Flow (STD_m3/h)	420.9	0.0000	420.9	0.0000
Std. Ideal Liq. Mass Density (kg/m3)	755.6	360.1	755.6	997.8
Act. Liq. Flow (barrel/day)	442.0	---	442.0	0.0000
Z Factor	---	0.8953	0.2073	2.260e-002
Watson K	11.99	17.28	11.99	8.497
User Property	---	---	---	---
Partial Pressure of H2S (psig)	-14.70	---	---	---
Cp/(Cp - R)	1.034	1.214	1.034	1.120
Cp/Cv	1.034	1.388	1.034	1.149
Heat of Vap. (kJ/kgmole)	2.556e+005	---	---	---
Kinematic Viscosity (cSt)	12.25	0.3993	12.25	0.8047
Liq. Mass Density (Std. Cond) (kg/m3)	781.8	0.9081	781.8	1015
Liq. Vol. Flow (Std. Cond) (barrel/day)	434.3	0.0000	434.3	0.0000
Liquid Fraction	1.000	0.0000	1.000	1.000
Molar Volume (m3/kgmole)	0.1645	0.7104	0.1645	1.793e-002

* Specified by user.

Material Stream: Pandhi-C (continued)

Fluid Package: Basis-1
Property Package: Peng-Robinson

PROPERTIES

	Overall	Vapour Phase	Liquid Phase	Aqueous Phase
Mass Heat of Vap. (kJ/kg)	2023	---	---	---
Phase Fraction [Molar Basis]	0.0000	0.0000	1.0000	0.0000
Surface Tension (dyne/cm)	15.96	---	15.96	71.32
Thermal Conductivity (W/m-K)	0.1006	3.302e-002	0.1006	0.6173
Viscosity (cP)	9.409	1.202e-002	9.409	0.8089
Cv (Semi-Ideal) (kJ/kgmole-C)	245.5	38.81	245.5	69.33
Mass Cv (Semi-Ideal) (kJ/kg-C)	1.943	1.815	1.943	3.846
Cv (kJ/kgmole-C)	245.5	33.96	245.5	67.56
Mass Cv (kJ/kg-C)	1.943	1.588	1.943	3.748
Cv (Ent. Method) (kJ/kgmole-C)	---	-3697	---	66.88
Mass Cv (Ent. Method) (kJ/kg-C)	---	-172.9	---	3.711
Cp/Cv (Ent. Method)	---	-1.275e-002	---	1.161
Reid VP at 37.8 C (psig)	97.87	---	97.87	---
True VP at 37.8 C (psig)	475.9	3607	475.9	17.11
Liq. Vol. Flow - Sum(Std. Ctl) (barrel/day)	434.3	0.0000	434.3	0.0000
HHV Molar Basis (Std) (Btu/SCF)	---	---	---	46.45
HHV Mass Basis (Std) (kJ/kg)	---	---	---	2274
CO2 Loading	---	---	---	---
CO2 App ML Con (kgmole/m3)	8.172e-002	---	8.172e-002	---
CO2 App WT Con (kgmol/kg)	1.064e-004	---	1.064e-004	---
Phase Fraction [Act. Vol. Basis]	0.0000	0.0000	1.000	0.0000
Mass Exergy (kJ/kg)	19.83	---	---	---
Viscosity Index	24.69	---	---	---
Ideal Gas Cp/Cv	1.043	1.249	1.043	1.329
Ideal Gas Cp (kJ/kgmole-C)	200.0	41.72	200.0	33.60
Mass Ideal Gas Cp (kJ/kg-C)	1.583	1.951	1.583	1.864
Bubble Point Pressure (psig)	445.0	---	---	---

COMPOSITION

Overall Phase

Vapour Fraction 0.0000

COMPONENTS	MOLAR FLOW (kgmole/h)	MOLE FRACTION	MASS FLOW (tonne/d)	MASS FRACTION	LIQUID VOLUME FLOW (m3/h)	LIQUID VOLUME FRACTION
Methane	2.0221	0.1136	0.7786	0.0144	0.1084	0.0364
Ethane	1.1465	0.0644	0.8274	0.0153	0.0969	0.0326
Propane	1.6775	0.0942	1.7753	0.0329	0.1460	0.0490
i-Butane	0.4420	0.0248	0.6166	0.0114	0.0457	0.0154
n-Butane	1.0672	0.0600	1.4887	0.0276	0.1064	0.0357
i-Pentane	0.3860	0.0217	0.6684	0.0124	0.0447	0.0150
n-Pentane	0.4950	0.0278	0.8571	0.0159	0.0567	0.0191
n-Hexane	1.1004	0.0618	2.2760	0.0422	0.1431	0.0481
Nitrogen	0.0228	0.0013	0.0153	0.0003	0.0008	0.0003
CO2	0.2393	0.0134	0.2527	0.0047	0.0128	0.0043
H2S	0.0000	0.0000	0.0000	0.0000	0.0000	0.0000
H2O	0.0107	0.0006	0.0046	0.0001	0.0002	0.0001
NBP[1]95*	0.1457	0.0082	0.2376	0.0044	0.0146	0.0049
NBP[1]121*	0.2063	0.0116	0.3606	0.0067	0.0218	0.0073
NBP[1]147*	0.3061	0.0172	0.5891	0.0109	0.0350	0.0118
NBP[1]171*	0.6492	0.0365	1.3660	0.0253	0.0800	0.0269
NBP[1]195*	0.9179	0.0516	2.0614	0.0382	0.1193	0.0401
NBP[1]222*	0.7271	0.0408	1.7563	0.0325	0.1004	0.0337
NBP[1]248*	0.6282	0.0353	1.6313	0.0302	0.0921	0.0309
NBP[1]273*	0.5177	0.0291	1.4378	0.0266	0.0803	0.0270
NBP[1]299*	0.4103	0.0230	1.2148	0.0225	0.0671	0.0225
NBP[1]325*	0.2995	0.0168	0.9422	0.0175	0.0515	0.0173
NBP[1]351*	0.2442	0.0137	0.8165	0.0151	0.0442	0.0148
NBP[1]377*	0.2240	0.0126	0.7989	0.0148	0.0428	0.0144

* Specified by user.

Material Stream: Pandhi-C (continued)

Fluid Package: Basis-1
Property Package: Peng-Robinson

COMPOSITION

Overall Phase (continued)

Vapour Fraction 0.0000

COMPONENTS	MOLAR FLOW (kgmole/h)	MOLE FRACTION	MASS FLOW (tonne/d)	MASS FRACTION	LIQUID VOLUME FLOW (m3/h)	LIQUID VOLUME FRACTION
NBP[1]402*	0.2058	0.0116	0.7826	0.0145	0.0415	0.0139
NBP[1]428*	0.1959	0.0110	0.7949	0.0147	0.0417	0.0140
NBP[1]454*	0.1955	0.0110	0.8477	0.0157	0.0441	0.0148
NBP[1]480*	0.1981	0.0111	0.9180	0.0170	0.0473	0.0159
NBP[1]505*	0.1920	0.0108	0.9483	0.0176	0.0484	0.0162
NBP[1]531*	0.1852	0.0104	0.9740	0.0180	0.0492	0.0165
NBP[1]557*	0.1784	0.0100	0.9978	0.0185	0.0500	0.0168
NBP[1]582*	0.1706	0.0096	1.0132	0.0188	0.0503	0.0169
NBP[1]608*	0.1643	0.0092	1.0351	0.0192	0.0510	0.0171
NBP[1]634*	0.1611	0.0090	1.0753	0.0199	0.0526	0.0177
NBP[1]659*	0.1586	0.0089	1.1194	0.0207	0.0543	0.0182
NBP[1]685*	0.1641	0.0092	1.2227	0.0227	0.0588	0.0198
NBP[1]711*	0.1715	0.0096	1.3445	0.0249	0.0642	0.0216
NBP[1]736*	0.1697	0.0095	1.3915	0.0258	0.0659	0.0221
NBP[1]762*	0.1653	0.0093	1.4214	0.0263	0.0669	0.0225
NBP[1]788*	0.1585	0.0089	1.4424	0.0267	0.0674	0.0226
NBP[1]825*	0.2655	0.0149	2.5963	0.0481	0.1201	0.0404
NBP[1]873*	0.1830	0.0103	1.9404	0.0359	0.0887	0.0298
NBP[1]926*	0.1437	0.0081	1.6472	0.0305	0.0744	0.0250
NBP[1]978*	0.1474	0.0083	1.8524	0.0343	0.0825	0.0277
NBP[1]1021*	0.0728	0.0041	0.9655	0.0179	0.0426	0.0143
NBP[1]1075*	0.0449	0.0025	0.6310	0.0117	0.0276	0.0093
NBP[1]1123*	0.0417	0.0023	0.6267	0.0116	0.0271	0.0091
NBP[1]1173*	0.0300	0.0017	0.4772	0.0088	0.0205	0.0069
NBP[1]1250*	0.0393	0.0022	0.6767	0.0125	0.0287	0.0096
NBP[1]1339*	0.0364	0.0020	0.6999	0.0130	0.0291	0.0098
NBP[1]1432*	0.0257	0.0014	0.5397	0.0100	0.0221	0.0074
NBP[1]1528*	0.0180	0.0010	0.4082	0.0076	0.0165	0.0055
NBP[1]1637*	0.0127	0.0007	0.3047	0.0056	0.0122	0.0041
NBP[1]1732*	0.0101	0.0006	0.2565	0.0048	0.0101	0.0034
NBP[1]1819*	0.0096	0.0005	0.2561	0.0047	0.0100	0.0034
NBP[1]1913*	0.0000	0.0000	0.0000	0.0000	0.0000	0.0000
Total	17.8012	1.0000	53.9808	1.0000	2.9766	1.0000

Vapour Phase

Phase Fraction 0.0000

COMPONENTS	MOLAR FLOW (kgmole/h)	MOLE FRACTION	MASS FLOW (tonne/d)	MASS FRACTION	LIQUID VOLUME FLOW (m3/h)	LIQUID VOLUME FRACTION
Methane	0.0000	0.7649	0.0000	0.5738	0.0000	0.6901
Ethane	0.0000	0.1032	0.0000	0.1451	0.0000	0.1469
Propane	0.0000	0.0507	0.0000	0.1046	0.0000	0.0743
i-Butane	0.0000	0.0059	0.0000	0.0161	0.0000	0.0103
n-Butane	0.0000	0.0108	0.0000	0.0292	0.0000	0.0181
i-Pentane	0.0000	0.0017	0.0000	0.0058	0.0000	0.0034
n-Pentane	0.0000	0.0017	0.0000	0.0059	0.0000	0.0033
n-Hexane	0.0000	0.0014	0.0000	0.0056	0.0000	0.0030
Nitrogen	0.0000	0.0208	0.0000	0.0272	0.0000	0.0122
CO2	0.0000	0.0341	0.0000	0.0701	0.0000	0.0306
H2S	0.0000	0.0000	0.0000	0.0000	0.0000	0.0000
H2O	0.0000	0.0015	0.0000	0.0012	0.0000	0.0004
NBP[1]95*	0.0000	0.0005	0.0000	0.0017	0.0000	0.0009
NBP[1]121*	0.0000	0.0005	0.0000	0.0017	0.0000	0.0009
NBP[1]147*	0.0000	0.0005	0.0000	0.0018	0.0000	0.0009
NBP[1]171*	0.0000	0.0006	0.0000	0.0027	0.0000	0.0013
NBP[1]195*	0.0000	0.0006	0.0000	0.0026	0.0000	0.0013

* Specified by user.

Material Stream: Pandhi-C (continued)

Fluid Package: Basis-1
Property Package: Peng-Robinson

COMPOSITION

Vapour Phase (continued)

Phase Fraction 0.0000

COMPONENTS	MOLAR FLOW (kgmole/h)	MOLE FRACTION	MASS FLOW (tonne/d)	MASS FRACTION	LIQUID VOLUME FLOW (m3/h)	LIQUID VOLUME FRACTION
NBP[1]222*	0.0000	0.0003	0.0000	0.0013	0.0000	0.0006
NBP[1]248*	0.0000	0.0001	0.0000	0.0007	0.0000	0.0003
NBP[1]273*	0.0000	0.0001	0.0000	0.0004	0.0000	0.0002
NBP[1]299*	0.0000	0.0000	0.0000	0.0002	0.0000	0.0001
NBP[1]325*	0.0000	0.0000	0.0000	0.0001	0.0000	0.0000
NBP[1]351*	0.0000	0.0000	0.0000	0.0000	0.0000	0.0000
NBP[1]377*	0.0000	0.0000	0.0000	0.0000	0.0000	0.0000
NBP[1]402*	0.0000	0.0000	0.0000	0.0000	0.0000	0.0000
NBP[1]428*	0.0000	0.0000	0.0000	0.0000	0.0000	0.0000
NBP[1]454*	0.0000	0.0000	0.0000	0.0000	0.0000	0.0000
NBP[1]480*	0.0000	0.0000	0.0000	0.0000	0.0000	0.0000
NBP[1]505*	0.0000	0.0000	0.0000	0.0000	0.0000	0.0000
NBP[1]531*	0.0000	0.0000	0.0000	0.0000	0.0000	0.0000
NBP[1]557*	0.0000	0.0000	0.0000	0.0000	0.0000	0.0000
NBP[1]582*	0.0000	0.0000	0.0000	0.0000	0.0000	0.0000
NBP[1]608*	0.0000	0.0000	0.0000	0.0000	0.0000	0.0000
NBP[1]634*	0.0000	0.0000	0.0000	0.0000	0.0000	0.0000
NBP[1]659*	0.0000	0.0000	0.0000	0.0000	0.0000	0.0000
NBP[1]685*	0.0000	0.0000	0.0000	0.0000	0.0000	0.0000
NBP[1]711*	0.0000	0.0000	0.0000	0.0000	0.0000	0.0000
NBP[1]736*	0.0000	0.0000	0.0000	0.0000	0.0000	0.0000
NBP[1]762*	0.0000	0.0000	0.0000	0.0000	0.0000	0.0000
NBP[1]788*	0.0000	0.0000	0.0000	0.0000	0.0000	0.0000
NBP[1]825*	0.0000	0.0000	0.0000	0.0000	0.0000	0.0000
NBP[1]873*	0.0000	0.0000	0.0000	0.0000	0.0000	0.0000
NBP[1]926*	0.0000	0.0000	0.0000	0.0000	0.0000	0.0000
NBP[1]978*	0.0000	0.0000	0.0000	0.0000	0.0000	0.0000
NBP[1]1021*	0.0000	0.0000	0.0000	0.0000	0.0000	0.0000
NBP[1]1075*	0.0000	0.0000	0.0000	0.0000	0.0000	0.0000
NBP[1]1123*	0.0000	0.0000	0.0000	0.0000	0.0000	0.0000
NBP[1]1173*	0.0000	0.0000	0.0000	0.0000	0.0000	0.0000
NBP[1]1250*	0.0000	0.0000	0.0000	0.0000	0.0000	0.0000
NBP[1]1339*	0.0000	0.0000	0.0000	0.0000	0.0000	0.0000
NBP[1]1432*	0.0000	0.0000	0.0000	0.0000	0.0000	0.0000
NBP[1]1528*	0.0000	0.0000	0.0000	0.0000	0.0000	0.0000
NBP[1]1637*	0.0000	0.0000	0.0000	0.0000	0.0000	0.0000
NBP[1]1732*	0.0000	0.0000	0.0000	0.0000	0.0000	0.0000
NBP[1]1819*	0.0000	0.0000	0.0000	0.0000	0.0000	0.0000
NBP[1]1913*	0.0000	0.0000	0.0000	0.0023	0.0000	0.0008
Total	0.0000	1.0000	0.0000	1.0000	0.0000	1.0000

Liquid Phase

Phase Fraction 1.000

COMPONENTS	MOLAR FLOW (kgmole/h)	MOLE FRACTION	MASS FLOW (tonne/d)	MASS FRACTION	LIQUID VOLUME FLOW (m3/h)	LIQUID VOLUME FRACTION
Methane	2.0221	0.1136	0.7786	0.0144	0.1084	0.0364
Ethane	1.1465	0.0644	0.8274	0.0153	0.0969	0.0326
Propane	1.6775	0.0942	1.7753	0.0329	0.1460	0.0490
i-Butane	0.4420	0.0248	0.6166	0.0114	0.0457	0.0154
n-Butane	1.0672	0.0600	1.4887	0.0276	0.1064	0.0357
i-Pentane	0.3860	0.0217	0.6684	0.0124	0.0447	0.0150
n-Pentane	0.4950	0.0278	0.8571	0.0159	0.0567	0.0191
n-Hexane	1.1004	0.0618	2.2760	0.0422	0.1431	0.0481
Nitrogen	0.0228	0.0013	0.0153	0.0003	0.0008	0.0003
CO2	0.2393	0.0134	0.2527	0.0047	0.0128	0.0043

* Specified by user.

Material Stream: Pandhi-C (continued)

Fluid Package: Basis-1
Property Package: Peng-Robinson

COMPOSITION

Liquid Phase (continued)

Phase Fraction 1.000

COMPONENTS	MOLAR FLOW (kgmole/h)	MOLE FRACTION	MASS FLOW (tonne/d)	MASS FRACTION	LIQUID VOLUME FLOW (m3/h)	LIQUID VOLUME FRACTION
H2S	0.0000	0.0000	0.0000	0.0000	0.0000	0.0000
H2O	0.0107	0.0006	0.0046	0.0001	0.0002	0.0001
NBP[1]95*	0.1457	0.0082	0.2376	0.0044	0.0146	0.0049
NBP[1]121*	0.2063	0.0116	0.3606	0.0067	0.0218	0.0073
NBP[1]147*	0.3061	0.0172	0.5891	0.0109	0.0350	0.0118
NBP[1]171*	0.6492	0.0365	1.3660	0.0253	0.0800	0.0269
NBP[1]195*	0.9179	0.0516	2.0614	0.0382	0.1193	0.0401
NBP[1]222*	0.7271	0.0408	1.7563	0.0325	0.1004	0.0337
NBP[1]248*	0.6282	0.0353	1.6313	0.0302	0.0921	0.0309
NBP[1]273*	0.5177	0.0291	1.4378	0.0266	0.0803	0.0270
NBP[1]299*	0.4103	0.0230	1.2148	0.0225	0.0671	0.0225
NBP[1]325*	0.2995	0.0168	0.9422	0.0175	0.0515	0.0173
NBP[1]351*	0.2442	0.0137	0.8165	0.0151	0.0442	0.0148
NBP[1]377*	0.2240	0.0126	0.7989	0.0148	0.0428	0.0144
NBP[1]402*	0.2058	0.0116	0.7826	0.0145	0.0415	0.0139
NBP[1]428*	0.1959	0.0110	0.7949	0.0147	0.0417	0.0140
NBP[1]454*	0.1955	0.0110	0.8477	0.0157	0.0441	0.0148
NBP[1]480*	0.1981	0.0111	0.9180	0.0170	0.0473	0.0159
NBP[1]505*	0.1920	0.0108	0.9483	0.0176	0.0484	0.0162
NBP[1]531*	0.1852	0.0104	0.9740	0.0180	0.0492	0.0165
NBP[1]557*	0.1784	0.0100	0.9978	0.0185	0.0500	0.0168
NBP[1]582*	0.1706	0.0096	1.0132	0.0188	0.0503	0.0169
NBP[1]608*	0.1643	0.0092	1.0351	0.0192	0.0510	0.0171
NBP[1]634*	0.1611	0.0090	1.0753	0.0199	0.0526	0.0177
NBP[1]659*	0.1586	0.0089	1.1194	0.0207	0.0543	0.0182
NBP[1]685*	0.1641	0.0092	1.2227	0.0227	0.0588	0.0198
NBP[1]711*	0.1715	0.0096	1.3445	0.0249	0.0642	0.0216
NBP[1]736*	0.1697	0.0095	1.3915	0.0258	0.0659	0.0221
NBP[1]762*	0.1653	0.0093	1.4214	0.0263	0.0669	0.0225
NBP[1]788*	0.1585	0.0089	1.4424	0.0267	0.0674	0.0226
NBP[1]825*	0.2655	0.0149	2.5963	0.0481	0.1201	0.0404
NBP[1]873*	0.1830	0.0103	1.9404	0.0359	0.0887	0.0298
NBP[1]926*	0.1437	0.0081	1.6472	0.0305	0.0744	0.0250
NBP[1]978*	0.1474	0.0083	1.8524	0.0343	0.0825	0.0277
NBP[1]1021*	0.0728	0.0041	0.9655	0.0179	0.0426	0.0143
NBP[1]1075*	0.0449	0.0025	0.6310	0.0117	0.0276	0.0093
NBP[1]1123*	0.0417	0.0023	0.6267	0.0116	0.0271	0.0091
NBP[1]1173*	0.0300	0.0017	0.4772	0.0088	0.0205	0.0069
NBP[1]1250*	0.0393	0.0022	0.6767	0.0125	0.0287	0.0096
NBP[1]1339*	0.0364	0.0020	0.6999	0.0130	0.0291	0.0098
NBP[1]1432*	0.0257	0.0014	0.5397	0.0100	0.0221	0.0074
NBP[1]1528*	0.0180	0.0010	0.4082	0.0076	0.0165	0.0055
NBP[1]1637*	0.0127	0.0007	0.3047	0.0056	0.0122	0.0041
NBP[1]1732*	0.0101	0.0006	0.2565	0.0048	0.0101	0.0034
NBP[1]1819*	0.0096	0.0005	0.2561	0.0047	0.0100	0.0034
NBP[1]1913*	0.0000	0.0000	0.0000	0.0000	0.0000	0.0000
Total	17.8012	1.0000	53.9808	1.0000	2.9766	1.0000

Aqueous Phase

Phase Fraction 0.0000

COMPONENTS	MOLAR FLOW (kgmole/h)	MOLE FRACTION	MASS FLOW (tonne/d)	MASS FRACTION	LIQUID VOLUME FLOW (m3/h)	LIQUID VOLUME FRACTION
Methane	0.0000	0.0000	0.0000	0.0000	0.0000	0.0000
Ethane	0.0000	0.0000	0.0000	0.0000	0.0000	0.0000
Propane	0.0000	0.0000	0.0000	0.0000	0.0000	0.0000

* Specified by user.

Material Stream: Pandhi-C (continued)

Fluid Package: Basis-1
Property Package: Peng-Robinson

COMPOSITION

Aqueous Phase (continued)

Phase Fraction 0.0000

COMPONENTS	MOLAR FLOW (kgmole/h)	MOLE FRACTION	MASS FLOW (tonne/d)	MASS FRACTION	LIQUID VOLUME FLOW (m3/h)	LIQUID VOLUME FRACTION
i-Butane	0.0000	0.0000	0.0000	0.0000	0.0000	0.0000
n-Butane	0.0000	0.0000	0.0000	0.0000	0.0000	0.0000
i-Pentane	0.0000	0.0000	0.0000	0.0000	0.0000	0.0000
n-Pentane	0.0000	0.0000	0.0000	0.0000	0.0000	0.0000
n-Hexane	0.0000	0.0000	0.0000	0.0000	0.0000	0.0000
Nitrogen	0.0000	0.0000	0.0000	0.0000	0.0000	0.0000
CO2	0.0000	0.0004	0.0000	0.0010	0.0000	0.0012
H2S	0.0000	0.0000	0.0000	0.0000	0.0000	0.0000
H2O	0.0000	0.9996	0.0000	0.9990	0.0000	0.9988
NBP[1]95*	0.0000	0.0000	0.0000	0.0000	0.0000	0.0000
NBP[1]121*	0.0000	0.0000	0.0000	0.0000	0.0000	0.0000
NBP[1]147*	0.0000	0.0000	0.0000	0.0000	0.0000	0.0000
NBP[1]171*	0.0000	0.0000	0.0000	0.0000	0.0000	0.0000
NBP[1]195*	0.0000	0.0000	0.0000	0.0000	0.0000	0.0000
NBP[1]222*	0.0000	0.0000	0.0000	0.0000	0.0000	0.0000
NBP[1]248*	0.0000	0.0000	0.0000	0.0000	0.0000	0.0000
NBP[1]273*	0.0000	0.0000	0.0000	0.0000	0.0000	0.0000
NBP[1]299*	0.0000	0.0000	0.0000	0.0000	0.0000	0.0000
NBP[1]325*	0.0000	0.0000	0.0000	0.0000	0.0000	0.0000
NBP[1]351*	0.0000	0.0000	0.0000	0.0000	0.0000	0.0000
NBP[1]377*	0.0000	0.0000	0.0000	0.0000	0.0000	0.0000
NBP[1]402*	0.0000	0.0000	0.0000	0.0000	0.0000	0.0000
NBP[1]428*	0.0000	0.0000	0.0000	0.0000	0.0000	0.0000
NBP[1]454*	0.0000	0.0000	0.0000	0.0000	0.0000	0.0000
NBP[1]480*	0.0000	0.0000	0.0000	0.0000	0.0000	0.0000
NBP[1]505*	0.0000	0.0000	0.0000	0.0000	0.0000	0.0000
NBP[1]531*	0.0000	0.0000	0.0000	0.0000	0.0000	0.0000
NBP[1]557*	0.0000	0.0000	0.0000	0.0000	0.0000	0.0000
NBP[1]582*	0.0000	0.0000	0.0000	0.0000	0.0000	0.0000
NBP[1]608*	0.0000	0.0000	0.0000	0.0000	0.0000	0.0000
NBP[1]634*	0.0000	0.0000	0.0000	0.0000	0.0000	0.0000
NBP[1]659*	0.0000	0.0000	0.0000	0.0000	0.0000	0.0000
NBP[1]685*	0.0000	0.0000	0.0000	0.0000	0.0000	0.0000
NBP[1]711*	0.0000	0.0000	0.0000	0.0000	0.0000	0.0000
NBP[1]736*	0.0000	0.0000	0.0000	0.0000	0.0000	0.0000
NBP[1]762*	0.0000	0.0000	0.0000	0.0000	0.0000	0.0000
NBP[1]788*	0.0000	0.0000	0.0000	0.0000	0.0000	0.0000
NBP[1]825*	0.0000	0.0000	0.0000	0.0000	0.0000	0.0000
NBP[1]873*	0.0000	0.0000	0.0000	0.0000	0.0000	0.0000
NBP[1]926*	0.0000	0.0000	0.0000	0.0000	0.0000	0.0000
NBP[1]978*	0.0000	0.0000	0.0000	0.0000	0.0000	0.0000
NBP[1]1021*	0.0000	0.0000	0.0000	0.0000	0.0000	0.0000
NBP[1]1075*	0.0000	0.0000	0.0000	0.0000	0.0000	0.0000
NBP[1]1123*	0.0000	0.0000	0.0000	0.0000	0.0000	0.0000
NBP[1]1173*	0.0000	0.0000	0.0000	0.0000	0.0000	0.0000
NBP[1]1250*	0.0000	0.0000	0.0000	0.0000	0.0000	0.0000
NBP[1]1339*	0.0000	0.0000	0.0000	0.0000	0.0000	0.0000
NBP[1]1432*	0.0000	0.0000	0.0000	0.0000	0.0000	0.0000
NBP[1]1528*	0.0000	0.0000	0.0000	0.0000	0.0000	0.0000
NBP[1]1637*	0.0000	0.0000	0.0000	0.0000	0.0000	0.0000
NBP[1]1732*	0.0000	0.0000	0.0000	0.0000	0.0000	0.0000
NBP[1]1819*	0.0000	0.0000	0.0000	0.0000	0.0000	0.0000
NBP[1]1913*	0.0000	0.0000	0.0000	0.0000	0.0000	0.0000
Total	0.0000	1.0000	0.0000	1.0000	0.0000	1.0000

* Specified by user.

Material Stream: Pandhi-Cond.

Fluid Package: Basis-1
Property Package: Peng-Robinson

CONDITIONS

	Overall	Vapour Phase	Liquid Phase	Aqueous Phase
Vapour / Phase Fraction	0.0000	0.0000	1.0000	0.0000
Temperature: (F)	96.15	96.15	96.15	96.15
Pressure: (psig)	645.0	645.0	645.0	645.0
Molar Flow (MMSCFD)	0.3879	0.0000	0.3879	0.0000
Mass Flow (tonne/d)	54.48	0.0000	54.48	0.0000
Std Ideal Liq Vol Flow (barrel/day)	461.8	0.0000	461.8	0.0000
Molar Enthalpy (kJ/kgmole)	-2.700e+005	-8.942e+004	-2.700e+005	-2.854e+005
Molar Entropy (kJ/kgmole-C)	216.0	156.4	216.0	56.42
Heat Flow (MMBtu/hr)	-4.943	0.0000	-4.943	0.0000
Liq Vol Flow @Std Cond (barrel/day)	444.2 *	0.0000	444.2	0.0000

PROPERTIES

	Overall	Vapour Phase	Liquid Phase	Aqueous Phase
Molecular Weight	117.5	21.43	117.5	18.03
Molar Density (kgmole/m3)	6.391	2.054	6.391	55.52
Mass Density (kg/m3)	750.9	44.03	750.9	1001
Act. Volume Flow (barrel/day)	456.3	0.0000	456.3	0.0000
Mass Enthalpy (kJ/kg)	-2298	-4173	-2298	-1.583e+004
Mass Entropy (kJ/kg-C)	1.838	7.301	1.838	3.130
Heat Capacity (kJ/kgmole-C)	241.4	50.16	241.4	77.63
Mass Heat Capacity (kJ/kg-C)	2.055	2.341	2.055	4.306
LHV Molar Basis (Std) (Btu/SCF)	---	---	---	3.285e-004
LHV Mass Basis (Std) (kJ/kg)	---	---	---	1.609e-002
Phase Fraction [Vol. Basis]	---	---	1.000	---
Phase Fraction [Mass Basis]	0.0000	0.0000	1.000	0.0000
Partial Pressure of CO2 (psig)	-14.70	---	---	---
Cost Based on Flow (Cost/s)	0.0000	0.0000	0.0000	0.0000
Act. Gas Flow (ACT_m3/h)	---	---	---	---
Avg. Liq. Density (kgmole/m3)	6.314	16.83	6.314	55.35
Specific Heat (kJ/kgmole-C)	241.4	50.16	241.4	77.63
Std. Gas Flow (STD_m3/h)	456.8	0.0000	456.8	0.0000
Std. Ideal Liq. Mass Density (kg/m3)	741.9	360.7	741.9	997.7
Act. Liq. Flow (barrel/day)	456.3	---	456.3	0.0000
Z Factor	---	0.8623	0.2772	3.191e-002
Watson K	12.04	17.25	12.04	8.495
User Property	---	---	---	---
Partial Pressure of H2S (psig)	-14.70	---	---	---
Cp/(Cp - R)	1.036	1.199	1.036	1.120
Cp/Cv	1.238	1.448	1.238	1.152
Heat of Vap. (kJ/kgmole)	2.157e+005	---	---	---
Kinematic Viscosity (cSt)	6.133	0.2860	6.133	0.7087
Liq. Mass Density (Std. Cond) (kg/m3)	771.3	0.9099	771.3	1015
Liq. Vol. Flow (Std. Cond) (barrel/day)	444.2	0.0000	444.2	0.0000
Liquid Fraction	1.000	0.0000	1.000	1.000
Molar Volume (m3/kgmole)	0.1565	0.4867	0.1565	1.801e-002
Mass Heat of Vap. (kJ/kg)	1836	---	---	---
Phase Fraction [Molar Basis]	0.0000	0.0000	1.0000	0.0000
Surface Tension (dyne/cm)	14.21	---	14.21	70.22
Thermal Conductivity (W/m-K)	9.629e-002	3.531e-002	9.629e-002	0.6259
Viscosity (cP)	4.605	1.259e-002	4.605	0.7094
Cv (Semi-Ideal) (kJ/kgmole-C)	233.1	41.85	233.1	69.31
Mass Cv (Semi-Ideal) (kJ/kg-C)	1.984	1.953	1.984	3.845
Cv (kJ/kgmole-C)	195.0	34.66	195.0	67.36
Mass Cv (kJ/kg-C)	1.660	1.617	1.660	3.736
Cv (Ent. Method) (kJ/kgmole-C)	---	---	---	66.70
Mass Cv (Ent. Method) (kJ/kg-C)	---	---	---	3.700
Cp/Cv (Ent. Method)	---	---	---	1.164

* Specified by user.

Material Stream: Pandhi-Cond. (continued)

Fluid Package: Basis-1
Property Package: Peng-Robinson

PROPERTIES

	Overall	Vapour Phase	Liquid Phase	Aqueous Phase
Reid VP at 37.8 C (psig)	134.3	---	134.3	---
True VP at 37.8 C (psig)	655.3	3720	655.3	32.98
Liq. Vol. Flow - Sum(Std. Cond) (barrel/day)	444.2	0.0000	444.2	0.0000
HHV Molar Basis (Std) (Btu/SCF)	---	---	---	46.44
HHV Mass Basis (Std) (kJ/kg)	---	---	---	2274
CO2 Loading	---	---	---	---
CO2 App ML Con (kgmole/m3)	0.1058	---	0.1058	---
CO2 App WT Con (kgmol/kg)	1.409e-004	---	1.409e-004	---
Phase Fraction [Act. Vol. Basis]	0.0000	0.0000	1.000	0.0000
Mass Exergy (kJ/kg)	27.74	---	---	---
Viscosity Index	20.58	---	---	---
Ideal Gas Cp/Cv	1.046	1.246	1.046	1.328
Ideal Gas Cp (kJ/kgmole-C)	190.0	42.18	190.0	33.64
Mass Ideal Gas Cp (kJ/kg-C)	1.617	1.968	1.617	1.866
Bubble Point Pressure (psig)	644.9	---	---	---

COMPOSITION

Overall Phase

Vapour Fraction 0.0000

COMPONENTS	MOLAR FLOW (kgmole/h)	MOLE FRACTION	MASS FLOW (tonne/d)	MASS FRACTION	LIQUID VOLUME FLOW (m3/h)	LIQUID VOLUME FRACTION
Methane	2.9394	0.1522	1.1318	0.0208	0.1575	0.0515
Ethane	1.4689	0.0760	1.0601	0.0195	0.1242	0.0406
Propane	1.9360	0.1002	2.0489	0.0376	0.1685	0.0551
i-Butane	0.4722	0.0244	0.6587	0.0121	0.0488	0.0160
n-Butane	1.1183	0.0579	1.5600	0.0286	0.1115	0.0364
i-Pentane	0.3834	0.0198	0.6638	0.0122	0.0444	0.0145
n-Pentane	0.4871	0.0252	0.8435	0.0155	0.0558	0.0182
n-Hexane	1.0636	0.0551	2.1999	0.0404	0.1383	0.0452
Nitrogen	0.0353	0.0018	0.0237	0.0004	0.0012	0.0004
CO2	0.3198	0.0166	0.3377	0.0062	0.0171	0.0056
H2S	0.0000	0.0000	0.0000	0.0000	0.0000	0.0000
H2O	0.0154	0.0008	0.0066	0.0001	0.0003	0.0001
NBP[1]95*	0.1443	0.0075	0.2353	0.0043	0.0144	0.0047
NBP[1]121*	0.2015	0.0104	0.3522	0.0065	0.0213	0.0070
NBP[1]147*	0.2970	0.0154	0.5717	0.0105	0.0340	0.0111
NBP[1]171*	0.6296	0.0326	1.3247	0.0243	0.0775	0.0253
NBP[1]195*	0.8923	0.0462	2.0039	0.0368	0.1159	0.0379
NBP[1]222*	0.7104	0.0368	1.7157	0.0315	0.0981	0.0321
NBP[1]248*	0.6169	0.0319	1.6022	0.0294	0.0905	0.0296
NBP[1]273*	0.5109	0.0264	1.4190	0.0260	0.0792	0.0259
NBP[1]299*	0.4065	0.0210	1.2037	0.0221	0.0665	0.0217
NBP[1]325*	0.2977	0.0154	0.9365	0.0172	0.0512	0.0167
NBP[1]351*	0.2432	0.0126	0.8133	0.0149	0.0440	0.0144
NBP[1]377*	0.2235	0.0116	0.7969	0.0146	0.0427	0.0140
NBP[1]402*	0.2055	0.0106	0.7814	0.0143	0.0414	0.0135
NBP[1]428*	0.1958	0.0101	0.7942	0.0146	0.0417	0.0136
NBP[1]454*	0.1954	0.0101	0.8473	0.0156	0.0441	0.0144
NBP[1]480*	0.1981	0.0103	0.9177	0.0168	0.0473	0.0154
NBP[1]505*	0.1920	0.0099	0.9482	0.0174	0.0484	0.0158
NBP[1]531*	0.1852	0.0096	0.9739	0.0179	0.0492	0.0161
NBP[1]557*	0.1784	0.0092	0.9978	0.0183	0.0500	0.0163
NBP[1]582*	0.1706	0.0088	1.0132	0.0186	0.0503	0.0165
NBP[1]608*	0.1643	0.0085	1.0351	0.0190	0.0510	0.0167
NBP[1]634*	0.1611	0.0083	1.0753	0.0197	0.0526	0.0172
NBP[1]659*	0.1586	0.0082	1.1194	0.0205	0.0543	0.0177
NBP[1]685*	0.1641	0.0085	1.2227	0.0224	0.0588	0.0192

* Specified by user.

Material Stream: Pandhi-Cond. (continued)

Fluid Package: Basis-1
Property Package: Peng-Robinson

COMPOSITION

Overall Phase (continued)

Vapour Fraction 0.0000

COMPONENTS	MOLAR FLOW (kgmole/h)	MOLE FRACTION	MASS FLOW (tonne/d)	MASS FRACTION	LIQUID VOLUME FLOW (m3/h)	LIQUID VOLUME FRACTION
NBP[1]711*	0.1715	0.0089	1.3445	0.0247	0.0642	0.0210
NBP[1]736*	0.1697	0.0088	1.3915	0.0255	0.0659	0.0215
NBP[1]762*	0.1653	0.0086	1.4214	0.0261	0.0669	0.0219
NBP[1]788*	0.1585	0.0082	1.4424	0.0265	0.0674	0.0220
NBP[1]825*	0.2655	0.0137	2.5963	0.0477	0.1201	0.0393
NBP[1]873*	0.1830	0.0095	1.9404	0.0356	0.0887	0.0290
NBP[1]926*	0.1437	0.0074	1.6472	0.0302	0.0744	0.0243
NBP[1]978*	0.1474	0.0076	1.8524	0.0340	0.0825	0.0270
NBP[1]1021*	0.0728	0.0038	0.9655	0.0177	0.0426	0.0139
NBP[1]1075*	0.0449	0.0023	0.6310	0.0116	0.0276	0.0090
NBP[1]1123*	0.0417	0.0022	0.6267	0.0115	0.0271	0.0089
NBP[1]1173*	0.0300	0.0016	0.4772	0.0088	0.0205	0.0067
NBP[1]1250*	0.0393	0.0020	0.6767	0.0124	0.0287	0.0094
NBP[1]1339*	0.0364	0.0019	0.6999	0.0128	0.0291	0.0095
NBP[1]1432*	0.0257	0.0013	0.5397	0.0099	0.0221	0.0072
NBP[1]1528*	0.0180	0.0009	0.4082	0.0075	0.0165	0.0054
NBP[1]1637*	0.0127	0.0007	0.3047	0.0056	0.0122	0.0040
NBP[1]1732*	0.0101	0.0005	0.2565	0.0047	0.0101	0.0033
NBP[1]1819*	0.0007	0.0000	0.0194	0.0004	0.0008	0.0002
NBP[1]1913*	0.0000	0.0000	0.0000	0.0000	0.0000	0.0000
Total	19.3189	1.0000	54.4778	1.0000	3.0595	1.0000

Vapour Phase

Phase Fraction 0.0000

COMPONENTS	MOLAR FLOW (kgmole/h)	MOLE FRACTION	MASS FLOW (tonne/d)	MASS FRACTION	LIQUID VOLUME FLOW (m3/h)	LIQUID VOLUME FRACTION
Methane	0.0000	0.7658	0.0000	0.5733	0.0000	0.6906
Ethane	0.0000	0.1025	0.0000	0.1439	0.0000	0.1459
Propane	0.0000	0.0500	0.0000	0.1029	0.0000	0.0733
i-Butane	0.0000	0.0058	0.0000	0.0158	0.0000	0.0102
n-Butane	0.0000	0.0106	0.0000	0.0288	0.0000	0.0178
i-Pentane	0.0000	0.0017	0.0000	0.0059	0.0000	0.0034
n-Pentane	0.0000	0.0018	0.0000	0.0060	0.0000	0.0034
n-Hexane	0.0000	0.0015	0.0000	0.0061	0.0000	0.0033
Nitrogen	0.0000	0.0209	0.0000	0.0273	0.0000	0.0122
CO2	0.0000	0.0339	0.0000	0.0697	0.0000	0.0305
H2S	0.0000	0.0000	0.0000	0.0000	0.0000	0.0000
H2O	0.0000	0.0016	0.0000	0.0013	0.0000	0.0005
NBP[1]95*	0.0000	0.0005	0.0000	0.0017	0.0000	0.0009
NBP[1]121*	0.0000	0.0005	0.0000	0.0017	0.0000	0.0009
NBP[1]147*	0.0000	0.0005	0.0000	0.0019	0.0000	0.0010
NBP[1]171*	0.0000	0.0007	0.0000	0.0030	0.0000	0.0015
NBP[1]195*	0.0000	0.0007	0.0000	0.0030	0.0000	0.0015
NBP[1]222*	0.0000	0.0003	0.0000	0.0016	0.0000	0.0008
NBP[1]248*	0.0000	0.0002	0.0000	0.0009	0.0000	0.0005
NBP[1]273*	0.0000	0.0001	0.0000	0.0005	0.0000	0.0002
NBP[1]299*	0.0000	0.0000	0.0000	0.0003	0.0000	0.0001
NBP[1]325*	0.0000	0.0000	0.0000	0.0001	0.0000	0.0001
NBP[1]351*	0.0000	0.0000	0.0000	0.0001	0.0000	0.0000
NBP[1]377*	0.0000	0.0000	0.0000	0.0000	0.0000	0.0000
NBP[1]402*	0.0000	0.0000	0.0000	0.0000	0.0000	0.0000
NBP[1]428*	0.0000	0.0000	0.0000	0.0000	0.0000	0.0000
NBP[1]454*	0.0000	0.0000	0.0000	0.0000	0.0000	0.0000
NBP[1]480*	0.0000	0.0000	0.0000	0.0000	0.0000	0.0000
NBP[1]505*	0.0000	0.0000	0.0000	0.0000	0.0000	0.0000

* Specified by user.

Material Stream: Pandhi-Cond. (continued)

Fluid Package: Basis-1
Property Package: Peng-Robinson

COMPOSITION

Vapour Phase (continued)

Phase Fraction 0.0000

COMPONENTS	MOLAR FLOW (kgmole/h)	MOLE FRACTION	MASS FLOW (tonne/d)	MASS FRACTION	LIQUID VOLUME FLOW (m3/h)	LIQUID VOLUME FRACTION
NBP[1]531*	0.0000	0.0000	0.0000	0.0000	0.0000	0.0000
NBP[1]557*	0.0000	0.0000	0.0000	0.0000	0.0000	0.0000
NBP[1]582*	0.0000	0.0000	0.0000	0.0000	0.0000	0.0000
NBP[1]608*	0.0000	0.0000	0.0000	0.0000	0.0000	0.0000
NBP[1]634*	0.0000	0.0000	0.0000	0.0000	0.0000	0.0000
NBP[1]659*	0.0000	0.0000	0.0000	0.0000	0.0000	0.0000
NBP[1]685*	0.0000	0.0000	0.0000	0.0000	0.0000	0.0000
NBP[1]711*	0.0000	0.0000	0.0000	0.0000	0.0000	0.0000
NBP[1]736*	0.0000	0.0000	0.0000	0.0000	0.0000	0.0000
NBP[1]762*	0.0000	0.0000	0.0000	0.0000	0.0000	0.0000
NBP[1]788*	0.0000	0.0000	0.0000	0.0000	0.0000	0.0000
NBP[1]825*	0.0000	0.0000	0.0000	0.0000	0.0000	0.0000
NBP[1]873*	0.0000	0.0000	0.0000	0.0000	0.0000	0.0000
NBP[1]926*	0.0000	0.0000	0.0000	0.0000	0.0000	0.0000
NBP[1]978*	0.0000	0.0000	0.0000	0.0000	0.0000	0.0000
NBP[1]1021*	0.0000	0.0000	0.0000	0.0000	0.0000	0.0000
NBP[1]1075*	0.0000	0.0000	0.0000	0.0000	0.0000	0.0000
NBP[1]1123*	0.0000	0.0000	0.0000	0.0000	0.0000	0.0000
NBP[1]1173*	0.0000	0.0000	0.0000	0.0000	0.0000	0.0000
NBP[1]1250*	0.0000	0.0000	0.0000	0.0000	0.0000	0.0000
NBP[1]1339*	0.0000	0.0000	0.0000	0.0000	0.0000	0.0000
NBP[1]1432*	0.0000	0.0000	0.0000	0.0000	0.0000	0.0000
NBP[1]1528*	0.0000	0.0000	0.0000	0.0000	0.0000	0.0000
NBP[1]1637*	0.0000	0.0000	0.0000	0.0000	0.0000	0.0000
NBP[1]1732*	0.0000	0.0000	0.0000	0.0000	0.0000	0.0000
NBP[1]1819*	0.0000	0.0000	0.0000	0.0017	0.0000	0.0006
NBP[1]1913*	0.0000	0.0000	0.0000	0.0023	0.0000	0.0008
Total	0.0000	1.0000	0.0000	1.0000	0.0000	1.0000

Liquid Phase

Phase Fraction 1.000

COMPONENTS	MOLAR FLOW (kgmole/h)	MOLE FRACTION	MASS FLOW (tonne/d)	MASS FRACTION	LIQUID VOLUME FLOW (m3/h)	LIQUID VOLUME FRACTION
Methane	2.9394	0.1522	1.1318	0.0208	0.1575	0.0515
Ethane	1.4689	0.0760	1.0601	0.0195	0.1242	0.0406
Propane	1.9360	0.1002	2.0489	0.0376	0.1685	0.0551
i-Butane	0.4722	0.0244	0.6587	0.0121	0.0488	0.0160
n-Butane	1.1183	0.0579	1.5600	0.0286	0.1115	0.0364
i-Pentane	0.3834	0.0198	0.6638	0.0122	0.0444	0.0145
n-Pentane	0.4871	0.0252	0.8435	0.0155	0.0558	0.0182
n-Hexane	1.0636	0.0551	2.1999	0.0404	0.1383	0.0452
Nitrogen	0.0353	0.0018	0.0237	0.0004	0.0012	0.0004
CO2	0.3198	0.0166	0.3377	0.0062	0.0171	0.0056
H2S	0.0000	0.0000	0.0000	0.0000	0.0000	0.0000
H2O	0.0154	0.0008	0.0066	0.0001	0.0003	0.0001
NBP[1]95*	0.1443	0.0075	0.2353	0.0043	0.0144	0.0047
NBP[1]121*	0.2015	0.0104	0.3522	0.0065	0.0213	0.0070
NBP[1]147*	0.2970	0.0154	0.5717	0.0105	0.0340	0.0111
NBP[1]171*	0.6296	0.0326	1.3247	0.0243	0.0775	0.0253
NBP[1]195*	0.8923	0.0462	2.0039	0.0368	0.1159	0.0379
NBP[1]222*	0.7104	0.0368	1.7157	0.0315	0.0981	0.0321
NBP[1]248*	0.6169	0.0319	1.6022	0.0294	0.0905	0.0296
NBP[1]273*	0.5109	0.0264	1.4190	0.0260	0.0792	0.0259
NBP[1]299*	0.4065	0.0210	1.2037	0.0221	0.0665	0.0217
NBP[1]325*	0.2977	0.0154	0.9365	0.0172	0.0512	0.0167

Licensed to: PETROCHEMICAL ENGINEERIN
* Specified by user.

Material Stream: Pandhi-Cond. (continued)

Fluid Package: Basis-1
Property Package: Peng-Robinson

COMPOSITION

Liquid Phase (continued)

Phase Fraction 1.000

COMPONENTS	MOLAR FLOW (kgmole/h)	MOLE FRACTION	MASS FLOW (tonne/d)	MASS FRACTION	LIQUID VOLUME FLOW (m3/h)	LIQUID VOLUME FRACTION
NBP[1]351*	0.2432	0.0126	0.8133	0.0149	0.0440	0.0144
NBP[1]377*	0.2235	0.0116	0.7969	0.0146	0.0427	0.0140
NBP[1]402*	0.2055	0.0106	0.7814	0.0143	0.0414	0.0135
NBP[1]428*	0.1958	0.0101	0.7942	0.0146	0.0417	0.0136
NBP[1]454*	0.1954	0.0101	0.8473	0.0156	0.0441	0.0144
NBP[1]480*	0.1981	0.0103	0.9177	0.0168	0.0473	0.0154
NBP[1]505*	0.1920	0.0099	0.9482	0.0174	0.0484	0.0158
NBP[1]531*	0.1852	0.0096	0.9739	0.0179	0.0492	0.0161
NBP[1]557*	0.1784	0.0092	0.9978	0.0183	0.0500	0.0163
NBP[1]582*	0.1706	0.0088	1.0132	0.0186	0.0503	0.0165
NBP[1]608*	0.1643	0.0085	1.0351	0.0190	0.0510	0.0167
NBP[1]634*	0.1611	0.0083	1.0753	0.0197	0.0526	0.0172
NBP[1]659*	0.1586	0.0082	1.1194	0.0205	0.0543	0.0177
NBP[1]685*	0.1641	0.0085	1.2227	0.0224	0.0588	0.0192
NBP[1]711*	0.1715	0.0089	1.3445	0.0247	0.0642	0.0210
NBP[1]736*	0.1697	0.0088	1.3915	0.0255	0.0659	0.0215
NBP[1]762*	0.1653	0.0086	1.4214	0.0261	0.0669	0.0219
NBP[1]788*	0.1585	0.0082	1.4424	0.0265	0.0674	0.0220
NBP[1]825*	0.2655	0.0137	2.5963	0.0477	0.1201	0.0393
NBP[1]873*	0.1830	0.0095	1.9404	0.0356	0.0887	0.0290
NBP[1]926*	0.1437	0.0074	1.6472	0.0302	0.0744	0.0243
NBP[1]978*	0.1474	0.0076	1.8524	0.0340	0.0825	0.0270
NBP[1]1021*	0.0728	0.0038	0.9655	0.0177	0.0426	0.0139
NBP[1]1075*	0.0449	0.0023	0.6310	0.0116	0.0276	0.0090
NBP[1]1123*	0.0417	0.0022	0.6267	0.0115	0.0271	0.0089
NBP[1]1173*	0.0300	0.0016	0.4772	0.0088	0.0205	0.0067
NBP[1]1250*	0.0393	0.0020	0.6767	0.0124	0.0287	0.0094
NBP[1]1339*	0.0364	0.0019	0.6999	0.0128	0.0291	0.0095
NBP[1]1432*	0.0257	0.0013	0.5397	0.0099	0.0221	0.0072
NBP[1]1528*	0.0180	0.0009	0.4082	0.0075	0.0165	0.0054
NBP[1]1637*	0.0127	0.0007	0.3047	0.0056	0.0122	0.0040
NBP[1]1732*	0.0101	0.0005	0.2565	0.0047	0.0101	0.0033
NBP[1]1819*	0.0007	0.0000	0.0194	0.0004	0.0008	0.0002
NBP[1]1913*	0.0000	0.0000	0.0000	0.0000	0.0000	0.0000
Total	19.3189	1.0000	54.4778	1.0000	3.0595	1.0000

Aqueous Phase

Phase Fraction 0.0000

COMPONENTS	MOLAR FLOW (kgmole/h)	MOLE FRACTION	MASS FLOW (tonne/d)	MASS FRACTION	LIQUID VOLUME FLOW (m3/h)	LIQUID VOLUME FRACTION
Methane	0.0000	0.0000	0.0000	0.0000	0.0000	0.0000
Ethane	0.0000	0.0000	0.0000	0.0000	0.0000	0.0000
Propane	0.0000	0.0000	0.0000	0.0000	0.0000	0.0000
i-Butane	0.0000	0.0000	0.0000	0.0000	0.0000	0.0000
n-Butane	0.0000	0.0000	0.0000	0.0000	0.0000	0.0000
i-Pentane	0.0000	0.0000	0.0000	0.0000	0.0000	0.0000
n-Pentane	0.0000	0.0000	0.0000	0.0000	0.0000	0.0000
n-Hexane	0.0000	0.0000	0.0000	0.0000	0.0000	0.0000
Nitrogen	0.0000	0.0000	0.0000	0.0000	0.0000	0.0000
CO2	0.0000	0.0005	0.0000	0.0011	0.0000	0.0014
H2S	0.0000	0.0000	0.0000	0.0000	0.0000	0.0000
H2O	0.0000	0.9995	0.0000	0.9988	0.0000	0.9986
NBP[1]95*	0.0000	0.0000	0.0000	0.0000	0.0000	0.0000
NBP[1]121*	0.0000	0.0000	0.0000	0.0000	0.0000	0.0000
NBP[1]147*	0.0000	0.0000	0.0000	0.0000	0.0000	0.0000

* Specified by user.

Material Stream: Pandhi-Cond. (continued)

Fluid Package: Basis-1
Property Package: Peng-Robinson

COMPOSITION

Aqueous Phase (continued)

Phase Fraction 0.0000

COMPONENTS	MOLAR FLOW (kgmole/h)	MOLE FRACTION	MASS FLOW (tonne/d)	MASS FRACTION	LIQUID VOLUME FLOW (m3/h)	LIQUID VOLUME FRACTION
NBP[1]171*	0.0000	0.0000	0.0000	0.0000	0.0000	0.0000
NBP[1]195*	0.0000	0.0000	0.0000	0.0000	0.0000	0.0000
NBP[1]222*	0.0000	0.0000	0.0000	0.0000	0.0000	0.0000
NBP[1]248*	0.0000	0.0000	0.0000	0.0000	0.0000	0.0000
NBP[1]273*	0.0000	0.0000	0.0000	0.0000	0.0000	0.0000
NBP[1]299*	0.0000	0.0000	0.0000	0.0000	0.0000	0.0000
NBP[1]325*	0.0000	0.0000	0.0000	0.0000	0.0000	0.0000
NBP[1]351*	0.0000	0.0000	0.0000	0.0000	0.0000	0.0000
NBP[1]377*	0.0000	0.0000	0.0000	0.0000	0.0000	0.0000
NBP[1]402*	0.0000	0.0000	0.0000	0.0000	0.0000	0.0000
NBP[1]428*	0.0000	0.0000	0.0000	0.0000	0.0000	0.0000
NBP[1]454*	0.0000	0.0000	0.0000	0.0000	0.0000	0.0000
NBP[1]480*	0.0000	0.0000	0.0000	0.0000	0.0000	0.0000
NBP[1]505*	0.0000	0.0000	0.0000	0.0000	0.0000	0.0000
NBP[1]531*	0.0000	0.0000	0.0000	0.0000	0.0000	0.0000
NBP[1]557*	0.0000	0.0000	0.0000	0.0000	0.0000	0.0000
NBP[1]582*	0.0000	0.0000	0.0000	0.0000	0.0000	0.0000
NBP[1]608*	0.0000	0.0000	0.0000	0.0000	0.0000	0.0000
NBP[1]634*	0.0000	0.0000	0.0000	0.0000	0.0000	0.0000
NBP[1]659*	0.0000	0.0000	0.0000	0.0000	0.0000	0.0000
NBP[1]685*	0.0000	0.0000	0.0000	0.0000	0.0000	0.0000
NBP[1]711*	0.0000	0.0000	0.0000	0.0000	0.0000	0.0000
NBP[1]736*	0.0000	0.0000	0.0000	0.0000	0.0000	0.0000
NBP[1]762*	0.0000	0.0000	0.0000	0.0000	0.0000	0.0000
NBP[1]788*	0.0000	0.0000	0.0000	0.0000	0.0000	0.0000
NBP[1]825*	0.0000	0.0000	0.0000	0.0000	0.0000	0.0000
NBP[1]873*	0.0000	0.0000	0.0000	0.0000	0.0000	0.0000
NBP[1]926*	0.0000	0.0000	0.0000	0.0000	0.0000	0.0000
NBP[1]978*	0.0000	0.0000	0.0000	0.0000	0.0000	0.0000
NBP[1]1021*	0.0000	0.0000	0.0000	0.0000	0.0000	0.0000
NBP[1]1075*	0.0000	0.0000	0.0000	0.0000	0.0000	0.0000
NBP[1]1123*	0.0000	0.0000	0.0000	0.0000	0.0000	0.0000
NBP[1]1173*	0.0000	0.0000	0.0000	0.0000	0.0000	0.0000
NBP[1]1250*	0.0000	0.0000	0.0000	0.0000	0.0000	0.0000
NBP[1]1339*	0.0000	0.0000	0.0000	0.0000	0.0000	0.0000
NBP[1]1432*	0.0000	0.0000	0.0000	0.0000	0.0000	0.0000
NBP[1]1528*	0.0000	0.0000	0.0000	0.0000	0.0000	0.0000
NBP[1]1637*	0.0000	0.0000	0.0000	0.0000	0.0000	0.0000
NBP[1]1732*	0.0000	0.0000	0.0000	0.0000	0.0000	0.0000
NBP[1]1819*	0.0000	0.0000	0.0000	0.0000	0.0000	0.0000
NBP[1]1913*	0.0000	0.0000	0.0000	0.0000	0.0000	0.0000
Total	0.0000	1.0000	0.0000	1.0000	0.0000	1.0000

Material Stream: Pandhi-Gas

Fluid Package: Basis-1
Property Package: Peng-Robinson

CONDITIONS

		Overall	Vapour Phase	Liquid Phase	Aqueous Phase
Vapour / Phase Fraction		1.0000	1.0000	0.0000	0.0000
Temperature:	(F)	84.79	84.79	84.79	84.79
Pressure:	(psig)	445.0	445.0	445.0	445.0
Molar Flow	(MMSCFD)	5.381	5.381	0.0000	0.0000
Mass Flow	(tonne/d)	137.6	137.6	0.0000	0.0000
Std Ideal Liq Vol Flow	(barrel/day)	2403	2403	0.0000	0.0000

* Specified by user.

Material Stream: Pandhi-Gas (continued)

Fluid Package: Basis-1
Property Package: Peng-Robinson

CONDITIONS

	Overall	Vapour Phase	Liquid Phase	Aqueous Phase
Molar Enthalpy (kJ/kgmole)	-8.928e+004	-8.928e+004	-2.875e+005	-2.859e+005
Molar Entropy (kJ/kgmole-C)	159.3	159.3	218.7	54.83
Heat Flow (MMBtu/hr)	-22.68	-22.68	0.0000	0.0000
Liq Vol Flow @Std Cond (barrel/day)	9.528e+005 *	9.528e+005	0.0000	0.0000

PROPERTIES

	Overall	Vapour Phase	Liquid Phase	Aqueous Phase
Molecular Weight	21.39	21.39	126.4	18.03
Molar Density (kgmole/m3)	1.408	1.408	6.079	55.76
Mass Density (kg/m3)	30.10	30.10	768.1	1005
Act. Volume Flow (barrel/day)	2.874e+004	2.874e+004	0.0000	0.0000
Mass Enthalpy (kJ/kg)	-4175	-4175	-2275	-1.586e+004
Mass Entropy (kJ/kg-C)	7.448	7.448	1.731	3.042
Heat Capacity (kJ/kgmole-C)	47.13	47.13	253.8	77.64
Mass Heat Capacity (kJ/kg-C)	2.204	2.204	2.009	4.307
LHV Molar Basis (Std) (Btu/SCF)	---	---	---	1.809e-004
LHV Mass Basis (Std) (kJ/kg)	---	---	---	8.858e-003
Phase Fraction [Vol. Basis]	1.000	1.000	---	---
Phase Fraction [Mass Basis]	1.000	1.000	0.0000	0.0000
Partial Pressure of CO2 (psig)	0.9692	---	---	---
Cost Based on Flow (Cost/s)	0.0000	0.0000	0.0000	0.0000
Act. Gas Flow (ACT_m3/h)	190.4	190.4	---	---
Avg. Liq. Density (kgmole/m3)	16.84	16.84	5.980	55.35
Specific Heat (kJ/kgmole-C)	47.13	47.13	253.8	77.64
Std. Gas Flow (STD_m3/h)	6337	6337	0.0000	0.0000
Std. Ideal Liq. Mass Density (kg/m3)	360.1	360.1	755.6	997.8
Act. Liq. Flow (barrel/day)	0.0000	---	---	0.0000
Z Factor	---	0.8953	0.2073	2.260e-002
Watson K	17.28	17.28	11.99	8.497
User Property	---	---	---	---
Partial Pressure of H2S (psig)	-14.70	---	---	---
Cp/(Cp - R)	1.214	1.214	1.034	1.120
Cp/Cv	1.388	1.388	1.034	1.149
Heat of Vap. (kJ/kgmole)	1.879e+004	---	---	---
Kinematic Viscosity (cSt)	0.3993	0.3993	12.25	0.8047
Liq. Mass Density (Std. Cond) (kg/m3)	0.9081	0.9081	781.8	1015
Liq. Vol. Flow (Std. Cond) (barrel/day)	9.528e+005	9.528e+005	0.0000	0.0000
Liquid Fraction	0.0000	0.0000	1.000	1.000
Molar Volume (m3/kgmole)	0.7104	0.7104	0.1645	1.793e-002
Mass Heat of Vap. (kJ/kg)	878.6	---	---	---
Phase Fraction [Molar Basis]	1.0000	1.0000	0.0000	0.0000
Surface Tension (dyne/cm)	---	---	15.96	71.32
Thermal Conductivity (W/m-K)	3.302e-002	3.302e-002	0.1006	0.6173
Viscosity (cP)	1.202e-002	1.202e-002	9.409	0.8089
Cv (Semi-Ideal) (kJ/kgmole-C)	38.81	38.81	245.5	69.33
Mass Cv (Semi-Ideal) (kJ/kg-C)	1.815	1.815	1.943	3.846
Cv (kJ/kgmole-C)	33.96	33.96	245.5	67.56
Mass Cv (kJ/kg-C)	1.588	1.588	1.943	3.748
Cv (Ent. Method) (kJ/kgmole-C)	-508.4	-3697	---	66.88
Mass Cv (Ent. Method) (kJ/kg-C)	-23.77	-172.9	---	3.711
Cp/Cv (Ent. Method)	-9.270e-002	-1.275e-002	---	1.161
Reid VP at 37.8 C (psig)	---	---	97.87	---
True VP at 37.8 C (psig)	3607	3607	475.9	17.11
Liq. Vol. Flow - Sum(Std. Cond) (barrel/day)	9.528e+005	9.528e+005	0.0000	0.0000
HHV Molar Basis (Std) (Btu/SCF)	---	---	---	46.45
HHV Mass Basis (Std) (kJ/kg)	---	---	---	2274
CO2 Loading	---	---	---	---

* Specified by user.

Material Stream: Pandhi-Gas (continued)

Fluid Package: Basis-1
Property Package: Peng-Robinson

PROPERTIES

	Overall	Vapour Phase	Liquid Phase	Aqueous Phase
CO2 App ML Con (kgmole/m3)	---	---	---	---
CO2 App WT Con (kgmol/kg)	---	---	---	---
Phase Fraction [Act. Vol. Basis]	1.000	1.000	0.0000	0.0000
Mass Exergy (kJ/kg)	387.1	---	---	---
Viscosity Index	-58.95	---	---	---
Ideal Gas Cp/Cv	1.249	1.249	1.043	1.329
Ideal Gas Cp (kJ/kgmole-C)	41.72	41.72	200.0	33.60
Mass Ideal Gas Cp (kJ/kg-C)	1.951	1.951	1.583	1.864
Bubble Point Pressure (psig)	4658	---	---	---

COMPOSITION

Overall Phase

Vapour Fraction 1.0000

COMPONENTS	MOLAR FLOW (kgmole/h)	MOLE FRACTION	MASS FLOW (tonne/d)	MASS FRACTION	LIQUID VOLUME FLOW (m3/h)	LIQUID VOLUME FRACTION
Methane	205.0219	0.7649	78.9395	0.5738	10.9860	0.6901
Ethane	27.6541	0.1032	19.9573	0.1451	2.3379	0.1469
Propane	13.5902	0.0507	14.3829	0.1046	1.1828	0.0743
i-Butane	1.5866	0.0059	2.2133	0.0161	0.1641	0.0103
n-Butane	2.8841	0.0108	4.0233	0.0292	0.2874	0.0181
i-Pentane	0.4635	0.0017	0.8025	0.0058	0.0536	0.0034
n-Pentane	0.4652	0.0017	0.8056	0.0059	0.0533	0.0033
n-Hexane	0.3694	0.0014	0.7639	0.0056	0.0480	0.0030
Nitrogen	5.5752	0.0208	3.7483	0.0272	0.1937	0.0122
CO2	9.1335	0.0341	9.6471	0.0701	0.4870	0.0306
H2S	0.0005	0.0000	0.0004	0.0000	0.0000	0.0000
H2O	0.3945	0.0015	0.1706	0.0012	0.0071	0.0004
NBP[1]95*	0.1425	0.0005	0.2323	0.0017	0.0142	0.0009
NBP[1]121*	0.1318	0.0005	0.2305	0.0017	0.0139	0.0009
NBP[1]147*	0.1254	0.0005	0.2414	0.0018	0.0144	0.0009
NBP[1]171*	0.1733	0.0006	0.3646	0.0027	0.0213	0.0013
NBP[1]195*	0.1579	0.0006	0.3546	0.0026	0.0205	0.0013
NBP[1]222*	0.0732	0.0003	0.1768	0.0013	0.0101	0.0006
NBP[1]248*	0.0375	0.0001	0.0974	0.0007	0.0055	0.0003
NBP[1]273*	0.0181	0.0001	0.0503	0.0004	0.0028	0.0002
NBP[1]299*	0.0083	0.0000	0.0245	0.0002	0.0014	0.0001
NBP[1]325*	0.0033	0.0000	0.0105	0.0001	0.0006	0.0000
NBP[1]351*	0.0015	0.0000	0.0050	0.0000	0.0003	0.0000
NBP[1]377*	0.0007	0.0000	0.0025	0.0000	0.0001	0.0000
NBP[1]402*	0.0003	0.0000	0.0013	0.0000	0.0001	0.0000
NBP[1]428*	0.0002	0.0000	0.0007	0.0000	0.0000	0.0000
NBP[1]454*	0.0001	0.0000	0.0003	0.0000	0.0000	0.0000
NBP[1]480*	0.0000	0.0000	0.0002	0.0000	0.0000	0.0000
NBP[1]505*	0.0000	0.0000	0.0001	0.0000	0.0000	0.0000
NBP[1]531*	0.0000	0.0000	0.0000	0.0000	0.0000	0.0000
NBP[1]557*	0.0000	0.0000	0.0000	0.0000	0.0000	0.0000
NBP[1]582*	0.0000	0.0000	0.0000	0.0000	0.0000	0.0000
NBP[1]608*	0.0000	0.0000	0.0000	0.0000	0.0000	0.0000
NBP[1]634*	0.0000	0.0000	0.0000	0.0000	0.0000	0.0000
NBP[1]659*	0.0000	0.0000	0.0000	0.0000	0.0000	0.0000
NBP[1]685*	0.0000	0.0000	0.0000	0.0000	0.0000	0.0000
NBP[1]711*	0.0000	0.0000	0.0000	0.0000	0.0000	0.0000
NBP[1]736*	0.0000	0.0000	0.0000	0.0000	0.0000	0.0000
NBP[1]762*	0.0000	0.0000	0.0000	0.0000	0.0000	0.0000
NBP[1]788*	0.0000	0.0000	0.0000	0.0000	0.0000	0.0000
NBP[1]825*	0.0000	0.0000	0.0000	0.0000	0.0000	0.0000
NBP[1]873*	0.0000	0.0000	0.0000	0.0000	0.0000	0.0000

* Specified by user.

Material Stream: Pandhi-Gas (continued)

Fluid Package: Basis-1
Property Package: Peng-Robinson

COMPOSITION

Overall Phase (continued)

Vapour Fraction 1.0000

COMPONENTS	MOLAR FLOW (kgmole/h)	MOLE FRACTION	MASS FLOW (tonne/d)	MASS FRACTION	LIQUID VOLUME FLOW (m3/h)	LIQUID VOLUME FRACTION
NBP[1]926*	0.0000	0.0000	0.0000	0.0000	0.0000	0.0000
NBP[1]978*	0.0000	0.0000	0.0000	0.0000	0.0000	0.0000
NBP[1]1021*	0.0000	0.0000	0.0000	0.0000	0.0000	0.0000
NBP[1]1075*	0.0000	0.0000	0.0000	0.0000	0.0000	0.0000
NBP[1]1123*	0.0000	0.0000	0.0000	0.0000	0.0000	0.0000
NBP[1]1173*	0.0000	0.0000	0.0000	0.0000	0.0000	0.0000
NBP[1]1250*	0.0000	0.0000	0.0000	0.0000	0.0000	0.0000
NBP[1]1339*	0.0000	0.0000	0.0000	0.0000	0.0000	0.0000
NBP[1]1432*	0.0000	0.0000	0.0000	0.0000	0.0000	0.0000
NBP[1]1528*	0.0000	0.0000	0.0000	0.0000	0.0000	0.0000
NBP[1]1637*	0.0000	0.0000	0.0000	0.0000	0.0000	0.0000
NBP[1]1732*	0.0000	0.0000	0.0000	0.0000	0.0000	0.0000
NBP[1]1819*	0.0001	0.0000	0.0029	0.0000	0.0001	0.0000
NBP[1]1913*	0.0112	0.0000	0.3148	0.0023	0.0121	0.0008
Total	268.0242	1.0000	137.5655	1.0000	15.9186	1.0000

Vapour Phase

Phase Fraction 1.000

COMPONENTS	MOLAR FLOW (kgmole/h)	MOLE FRACTION	MASS FLOW (tonne/d)	MASS FRACTION	LIQUID VOLUME FLOW (m3/h)	LIQUID VOLUME FRACTION
Methane	205.0219	0.7649	78.9395	0.5738	10.9860	0.6901
Ethane	27.6541	0.1032	19.9573	0.1451	2.3379	0.1469
Propane	13.5902	0.0507	14.3829	0.1046	1.1828	0.0743
i-Butane	1.5866	0.0059	2.2133	0.0161	0.1641	0.0103
n-Butane	2.8841	0.0108	4.0233	0.0292	0.2874	0.0181
i-Pentane	0.4635	0.0017	0.8025	0.0058	0.0536	0.0034
n-Pentane	0.4652	0.0017	0.8056	0.0059	0.0533	0.0033
n-Hexane	0.3694	0.0014	0.7639	0.0056	0.0480	0.0030
Nitrogen	5.5752	0.0208	3.7483	0.0272	0.1937	0.0122
CO2	9.1335	0.0341	9.6471	0.0701	0.4870	0.0306
H2S	0.0005	0.0000	0.0004	0.0000	0.0000	0.0000
H2O	0.3945	0.0015	0.1706	0.0012	0.0071	0.0004
NBP[1]95*	0.1425	0.0005	0.2323	0.0017	0.0142	0.0009
NBP[1]121*	0.1318	0.0005	0.2305	0.0017	0.0139	0.0009
NBP[1]147*	0.1254	0.0005	0.2414	0.0018	0.0144	0.0009
NBP[1]171*	0.1733	0.0006	0.3646	0.0027	0.0213	0.0013
NBP[1]195*	0.1579	0.0006	0.3546	0.0026	0.0205	0.0013
NBP[1]222*	0.0732	0.0003	0.1768	0.0013	0.0101	0.0006
NBP[1]248*	0.0375	0.0001	0.0974	0.0007	0.0055	0.0003
NBP[1]273*	0.0181	0.0001	0.0503	0.0004	0.0028	0.0002
NBP[1]299*	0.0083	0.0000	0.0245	0.0002	0.0014	0.0001
NBP[1]325*	0.0033	0.0000	0.0105	0.0001	0.0006	0.0000
NBP[1]351*	0.0015	0.0000	0.0050	0.0000	0.0003	0.0000
NBP[1]377*	0.0007	0.0000	0.0025	0.0000	0.0001	0.0000
NBP[1]402*	0.0003	0.0000	0.0013	0.0000	0.0001	0.0000
NBP[1]428*	0.0002	0.0000	0.0007	0.0000	0.0000	0.0000
NBP[1]454*	0.0001	0.0000	0.0003	0.0000	0.0000	0.0000
NBP[1]480*	0.0000	0.0000	0.0002	0.0000	0.0000	0.0000
NBP[1]505*	0.0000	0.0000	0.0001	0.0000	0.0000	0.0000
NBP[1]531*	0.0000	0.0000	0.0000	0.0000	0.0000	0.0000
NBP[1]557*	0.0000	0.0000	0.0000	0.0000	0.0000	0.0000
NBP[1]582*	0.0000	0.0000	0.0000	0.0000	0.0000	0.0000
NBP[1]608*	0.0000	0.0000	0.0000	0.0000	0.0000	0.0000
NBP[1]634*	0.0000	0.0000	0.0000	0.0000	0.0000	0.0000
NBP[1]659*	0.0000	0.0000	0.0000	0.0000	0.0000	0.0000

* Specified by user.

Material Stream: Pandhi-Gas (continued)

Fluid Package: Basis-1
Property Package: Peng-Robinson

COMPOSITION

Vapour Phase (continued)

Phase Fraction 1.000

COMPONENTS	MOLAR FLOW (kgmole/h)	MOLE FRACTION	MASS FLOW (tonne/d)	MASS FRACTION	LIQUID VOLUME FLOW (m3/h)	LIQUID VOLUME FRACTION
NBP[1]685*	0.0000	0.0000	0.0000	0.0000	0.0000	0.0000
NBP[1]711*	0.0000	0.0000	0.0000	0.0000	0.0000	0.0000
NBP[1]736*	0.0000	0.0000	0.0000	0.0000	0.0000	0.0000
NBP[1]762*	0.0000	0.0000	0.0000	0.0000	0.0000	0.0000
NBP[1]788*	0.0000	0.0000	0.0000	0.0000	0.0000	0.0000
NBP[1]825*	0.0000	0.0000	0.0000	0.0000	0.0000	0.0000
NBP[1]873*	0.0000	0.0000	0.0000	0.0000	0.0000	0.0000
NBP[1]926*	0.0000	0.0000	0.0000	0.0000	0.0000	0.0000
NBP[1]978*	0.0000	0.0000	0.0000	0.0000	0.0000	0.0000
NBP[1]1021*	0.0000	0.0000	0.0000	0.0000	0.0000	0.0000
NBP[1]1075*	0.0000	0.0000	0.0000	0.0000	0.0000	0.0000
NBP[1]1123*	0.0000	0.0000	0.0000	0.0000	0.0000	0.0000
NBP[1]1173*	0.0000	0.0000	0.0000	0.0000	0.0000	0.0000
NBP[1]1250*	0.0000	0.0000	0.0000	0.0000	0.0000	0.0000
NBP[1]1339*	0.0000	0.0000	0.0000	0.0000	0.0000	0.0000
NBP[1]1432*	0.0000	0.0000	0.0000	0.0000	0.0000	0.0000
NBP[1]1528*	0.0000	0.0000	0.0000	0.0000	0.0000	0.0000
NBP[1]1637*	0.0000	0.0000	0.0000	0.0000	0.0000	0.0000
NBP[1]1732*	0.0000	0.0000	0.0000	0.0000	0.0000	0.0000
NBP[1]1819*	0.0001	0.0000	0.0029	0.0000	0.0001	0.0000
NBP[1]1913*	0.0112	0.0000	0.3148	0.0023	0.0121	0.0008
Total	268.0242	1.0000	137.5655	1.0000	15.9186	1.0000

Liquid Phase

Phase Fraction 0.0000

COMPONENTS	MOLAR FLOW (kgmole/h)	MOLE FRACTION	MASS FLOW (tonne/d)	MASS FRACTION	LIQUID VOLUME FLOW (m3/h)	LIQUID VOLUME FRACTION
Methane	0.0000	0.1136	0.0000	0.0144	0.0000	0.0364
Ethane	0.0000	0.0644	0.0000	0.0153	0.0000	0.0326
Propane	0.0000	0.0942	0.0000	0.0329	0.0000	0.0490
i-Butane	0.0000	0.0248	0.0000	0.0114	0.0000	0.0154
n-Butane	0.0000	0.0600	0.0000	0.0276	0.0000	0.0357
i-Pentane	0.0000	0.0217	0.0000	0.0124	0.0000	0.0150
n-Pentane	0.0000	0.0278	0.0000	0.0159	0.0000	0.0191
n-Hexane	0.0000	0.0618	0.0000	0.0422	0.0000	0.0481
Nitrogen	0.0000	0.0013	0.0000	0.0003	0.0000	0.0003
CO2	0.0000	0.0134	0.0000	0.0047	0.0000	0.0043
H2S	0.0000	0.0000	0.0000	0.0000	0.0000	0.0000
H2O	0.0000	0.0006	0.0000	0.0001	0.0000	0.0001
NBP[1]95*	0.0000	0.0082	0.0000	0.0044	0.0000	0.0049
NBP[1]121*	0.0000	0.0116	0.0000	0.0067	0.0000	0.0073
NBP[1]147*	0.0000	0.0172	0.0000	0.0109	0.0000	0.0118
NBP[1]171*	0.0000	0.0365	0.0000	0.0253	0.0000	0.0269
NBP[1]195*	0.0000	0.0516	0.0000	0.0382	0.0000	0.0401
NBP[1]222*	0.0000	0.0408	0.0000	0.0325	0.0000	0.0337
NBP[1]248*	0.0000	0.0353	0.0000	0.0302	0.0000	0.0309
NBP[1]273*	0.0000	0.0291	0.0000	0.0266	0.0000	0.0270
NBP[1]299*	0.0000	0.0230	0.0000	0.0225	0.0000	0.0225
NBP[1]325*	0.0000	0.0168	0.0000	0.0175	0.0000	0.0173
NBP[1]351*	0.0000	0.0137	0.0000	0.0151	0.0000	0.0148
NBP[1]377*	0.0000	0.0126	0.0000	0.0148	0.0000	0.0144
NBP[1]402*	0.0000	0.0116	0.0000	0.0145	0.0000	0.0139
NBP[1]428*	0.0000	0.0110	0.0000	0.0147	0.0000	0.0140
NBP[1]454*	0.0000	0.0110	0.0000	0.0157	0.0000	0.0148
NBP[1]480*	0.0000	0.0111	0.0000	0.0170	0.0000	0.0159

* Specified by user.

Material Stream: Pandhi-Gas (continued)

Fluid Package: Basis-1
Property Package: Peng-Robinson

COMPOSITION

Liquid Phase (continued)

Phase Fraction 0.0000

COMPONENTS	MOLAR FLOW (kgmole/h)	MOLE FRACTION	MASS FLOW (tonne/d)	MASS FRACTION	LIQUID VOLUME FLOW (m3/h)	LIQUID VOLUME FRACTION
NBP[1]505*	0.0000	0.0108	0.0000	0.0176	0.0000	0.0162
NBP[1]531*	0.0000	0.0104	0.0000	0.0180	0.0000	0.0165
NBP[1]557*	0.0000	0.0100	0.0000	0.0185	0.0000	0.0168
NBP[1]582*	0.0000	0.0096	0.0000	0.0188	0.0000	0.0169
NBP[1]608*	0.0000	0.0092	0.0000	0.0192	0.0000	0.0171
NBP[1]634*	0.0000	0.0090	0.0000	0.0199	0.0000	0.0177
NBP[1]659*	0.0000	0.0089	0.0000	0.0207	0.0000	0.0182
NBP[1]685*	0.0000	0.0092	0.0000	0.0227	0.0000	0.0198
NBP[1]711*	0.0000	0.0096	0.0000	0.0249	0.0000	0.0216
NBP[1]736*	0.0000	0.0095	0.0000	0.0258	0.0000	0.0221
NBP[1]762*	0.0000	0.0093	0.0000	0.0263	0.0000	0.0225
NBP[1]788*	0.0000	0.0089	0.0000	0.0267	0.0000	0.0226
NBP[1]825*	0.0000	0.0149	0.0000	0.0481	0.0000	0.0404
NBP[1]873*	0.0000	0.0103	0.0000	0.0359	0.0000	0.0298
NBP[1]926*	0.0000	0.0081	0.0000	0.0305	0.0000	0.0250
NBP[1]978*	0.0000	0.0083	0.0000	0.0343	0.0000	0.0277
NBP[1]1021*	0.0000	0.0041	0.0000	0.0179	0.0000	0.0143
NBP[1]1075*	0.0000	0.0025	0.0000	0.0117	0.0000	0.0093
NBP[1]1123*	0.0000	0.0023	0.0000	0.0116	0.0000	0.0091
NBP[1]1173*	0.0000	0.0017	0.0000	0.0088	0.0000	0.0069
NBP[1]1250*	0.0000	0.0022	0.0000	0.0125	0.0000	0.0096
NBP[1]1339*	0.0000	0.0020	0.0000	0.0130	0.0000	0.0098
NBP[1]1432*	0.0000	0.0014	0.0000	0.0100	0.0000	0.0074
NBP[1]1528*	0.0000	0.0010	0.0000	0.0076	0.0000	0.0055
NBP[1]1637*	0.0000	0.0007	0.0000	0.0056	0.0000	0.0041
NBP[1]1732*	0.0000	0.0006	0.0000	0.0048	0.0000	0.0034
NBP[1]1819*	0.0000	0.0005	0.0000	0.0047	0.0000	0.0034
NBP[1]1913*	0.0000	0.0000	0.0000	0.0000	0.0000	0.0000
Total	0.0000	1.0000	0.0000	1.0000	0.0000	1.0000

Aqueous Phase

Phase Fraction 0.0000

COMPONENTS	MOLAR FLOW (kgmole/h)	MOLE FRACTION	MASS FLOW (tonne/d)	MASS FRACTION	LIQUID VOLUME FLOW (m3/h)	LIQUID VOLUME FRACTION
Methane	0.0000	0.0000	0.0000	0.0000	0.0000	0.0000
Ethane	0.0000	0.0000	0.0000	0.0000	0.0000	0.0000
Propane	0.0000	0.0000	0.0000	0.0000	0.0000	0.0000
i-Butane	0.0000	0.0000	0.0000	0.0000	0.0000	0.0000
n-Butane	0.0000	0.0000	0.0000	0.0000	0.0000	0.0000
i-Pentane	0.0000	0.0000	0.0000	0.0000	0.0000	0.0000
n-Pentane	0.0000	0.0000	0.0000	0.0000	0.0000	0.0000
n-Hexane	0.0000	0.0000	0.0000	0.0000	0.0000	0.0000
Nitrogen	0.0000	0.0000	0.0000	0.0000	0.0000	0.0000
CO2	0.0000	0.0004	0.0000	0.0010	0.0000	0.0012
H2S	0.0000	0.0000	0.0000	0.0000	0.0000	0.0000
H2O	0.0000	0.9996	0.0000	0.9990	0.0000	0.9988
NBP[1]95*	0.0000	0.0000	0.0000	0.0000	0.0000	0.0000
NBP[1]121*	0.0000	0.0000	0.0000	0.0000	0.0000	0.0000
NBP[1]147*	0.0000	0.0000	0.0000	0.0000	0.0000	0.0000
NBP[1]171*	0.0000	0.0000	0.0000	0.0000	0.0000	0.0000
NBP[1]195*	0.0000	0.0000	0.0000	0.0000	0.0000	0.0000
NBP[1]222*	0.0000	0.0000	0.0000	0.0000	0.0000	0.0000
NBP[1]248*	0.0000	0.0000	0.0000	0.0000	0.0000	0.0000
NBP[1]273*	0.0000	0.0000	0.0000	0.0000	0.0000	0.0000
NBP[1]299*	0.0000	0.0000	0.0000	0.0000	0.0000	0.0000

* Specified by user.

Material Stream: Pandhi-Gas (continued)

Fluid Package: Basis-1
Property Package: Peng-Robinson

COMPOSITION

Aqueous Phase (continued)

Phase Fraction 0.0000

COMPONENTS	MOLAR FLOW (kgmole/h)	MOLE FRACTION	MASS FLOW (tonne/d)	MASS FRACTION	LIQUID VOLUME FLOW (m3/h)	LIQUID VOLUME FRACTION
NBP[1]325*	0.0000	0.0000	0.0000	0.0000	0.0000	0.0000
NBP[1]351*	0.0000	0.0000	0.0000	0.0000	0.0000	0.0000
NBP[1]377*	0.0000	0.0000	0.0000	0.0000	0.0000	0.0000
NBP[1]402*	0.0000	0.0000	0.0000	0.0000	0.0000	0.0000
NBP[1]428*	0.0000	0.0000	0.0000	0.0000	0.0000	0.0000
NBP[1]454*	0.0000	0.0000	0.0000	0.0000	0.0000	0.0000
NBP[1]480*	0.0000	0.0000	0.0000	0.0000	0.0000	0.0000
NBP[1]505*	0.0000	0.0000	0.0000	0.0000	0.0000	0.0000
NBP[1]531*	0.0000	0.0000	0.0000	0.0000	0.0000	0.0000
NBP[1]557*	0.0000	0.0000	0.0000	0.0000	0.0000	0.0000
NBP[1]582*	0.0000	0.0000	0.0000	0.0000	0.0000	0.0000
NBP[1]608*	0.0000	0.0000	0.0000	0.0000	0.0000	0.0000
NBP[1]634*	0.0000	0.0000	0.0000	0.0000	0.0000	0.0000
NBP[1]659*	0.0000	0.0000	0.0000	0.0000	0.0000	0.0000
NBP[1]685*	0.0000	0.0000	0.0000	0.0000	0.0000	0.0000
NBP[1]711*	0.0000	0.0000	0.0000	0.0000	0.0000	0.0000
NBP[1]736*	0.0000	0.0000	0.0000	0.0000	0.0000	0.0000
NBP[1]762*	0.0000	0.0000	0.0000	0.0000	0.0000	0.0000
NBP[1]788*	0.0000	0.0000	0.0000	0.0000	0.0000	0.0000
NBP[1]825*	0.0000	0.0000	0.0000	0.0000	0.0000	0.0000
NBP[1]873*	0.0000	0.0000	0.0000	0.0000	0.0000	0.0000
NBP[1]926*	0.0000	0.0000	0.0000	0.0000	0.0000	0.0000
NBP[1]978*	0.0000	0.0000	0.0000	0.0000	0.0000	0.0000
NBP[1]1021*	0.0000	0.0000	0.0000	0.0000	0.0000	0.0000
NBP[1]1075*	0.0000	0.0000	0.0000	0.0000	0.0000	0.0000
NBP[1]1123*	0.0000	0.0000	0.0000	0.0000	0.0000	0.0000
NBP[1]1173*	0.0000	0.0000	0.0000	0.0000	0.0000	0.0000
NBP[1]1250*	0.0000	0.0000	0.0000	0.0000	0.0000	0.0000
NBP[1]1339*	0.0000	0.0000	0.0000	0.0000	0.0000	0.0000
NBP[1]1432*	0.0000	0.0000	0.0000	0.0000	0.0000	0.0000
NBP[1]1528*	0.0000	0.0000	0.0000	0.0000	0.0000	0.0000
NBP[1]1637*	0.0000	0.0000	0.0000	0.0000	0.0000	0.0000
NBP[1]1732*	0.0000	0.0000	0.0000	0.0000	0.0000	0.0000
NBP[1]1819*	0.0000	0.0000	0.0000	0.0000	0.0000	0.0000
NBP[1]1913*	0.0000	0.0000	0.0000	0.0000	0.0000	0.0000
Total	0.0000	1.0000	0.0000	1.0000	0.0000	1.0000

Material Stream: Pandhi-W

Fluid Package: Basis-1
Property Package: Peng-Robinson

CONDITIONS

		Overall	Vapour Phase	Liquid Phase	Aqueous Phase
Vapour / Phase Fraction		0.0000	0.0000	0.0000	1.0000
Temperature:	(F)	84.79	84.79	84.79	84.79
Pressure:	(psig)	445.0	445.0	445.0	445.0
Molar Flow	(MMSCFD)	2.135	0.0000	0.0000	2.135
Mass Flow	(tonne/d)	46.00	0.0000	0.0000	46.00
Std Ideal Liq Vol Flow	(barrel/day)	290.0	0.0000	0.0000	290.0
Molar Enthalpy	(kJ/kgmole)	-2.859e+005	-8.928e+004	-2.875e+005	-2.859e+005
Molar Entropy	(kJ/kgmole-C)	54.83	159.3	218.7	54.83
Heat Flow	(MMBtu/hr)	-28.81	0.0000	0.0000	-28.81
Liq Vol Flow @Std Cond	(barrel/day)	285.1 *	0.0000	0.0000	285.1

* Specified by user.

Material Stream: Pandhi-W (continued)

Fluid Package: Basis-1
Property Package: Peng-Robinson

PROPERTIES

	Overall	Vapour Phase	Liquid Phase	Aqueous Phase
Molecular Weight	18.03	21.39	126.4	18.03
Molar Density (kgmole/m3)	55.76	1.408	6.079	55.76
Mass Density (kg/m3)	1005	30.10	768.1	1005
Act. Volume Flow (barrel/day)	287.9	0.0000	0.0000	287.9
Mass Enthalpy (kJ/kg)	-1.586e+004	-4175	-2275	-1.586e+004
Mass Entropy (kJ/kg-C)	3.042	7.448	1.731	3.042
Heat Capacity (kJ/kgmole-C)	77.64	47.13	253.8	77.64
Mass Heat Capacity (kJ/kg-C)	4.307	2.204	2.009	4.307
LHV Molar Basis (Std) (Btu/SCF)	1.809e-004	---	---	1.809e-004
LHV Mass Basis (Std) (kJ/kg)	8.858e-003	---	---	8.858e-003
Phase Fraction [Vol. Basis]	---	---	---	1.000
Phase Fraction [Mass Basis]	0.0000	0.0000	0.0000	1.000
Partial Pressure of CO2 (psig)	-14.70	---	---	---
Cost Based on Flow (Cost/s)	0.0000	0.0000	0.0000	0.0000
Act. Gas Flow (ACT_m3/h)	---	---	---	---
Avg. Liq. Density (kgmole/m3)	55.35	16.84	5.980	55.35
Specific Heat (kJ/kgmole-C)	77.64	47.13	253.8	77.64
Std. Gas Flow (STD_m3/h)	2514	0.0000	0.0000	2514
Std. Ideal Liq. Mass Density (kg/m3)	997.8	360.1	755.6	997.8
Act. Liq. Flow (barrel/day)	287.9	---	---	287.9
Z Factor	---	0.8953	0.2073	2.260e-002
Watson K	8.497	17.28	11.99	8.497
User Property	---	---	---	---
Partial Pressure of H2S (psig)	-14.70	---	---	---
Cp/(Cp - R)	1.120	1.214	1.034	1.120
Cp/Cv	1.149	1.388	1.034	1.149
Heat of Vap. (kJ/kgmole)	3.304e+004	---	---	---
Kinematic Viscosity (cSt)	0.8047	0.3993	12.25	0.8047
Liq. Mass Density (Std. Cond) (kg/m3)	1015	0.9081	781.8	1015
Liq. Vol. Flow (Std. Cond) (barrel/day)	285.1	0.0000	0.0000	285.1
Liquid Fraction	1.000	0.0000	1.000	1.000
Molar Volume (m3/kgmole)	1.793e-002	0.7104	0.1645	1.793e-002
Mass Heat of Vap. (kJ/kg)	1833	---	---	---
Phase Fraction [Molar Basis]	0.0000	0.0000	0.0000	1.0000
Surface Tension (dyne/cm)	71.32	---	15.96	71.32
Thermal Conductivity (W/m-K)	0.6173	3.302e-002	0.1006	0.6173
Viscosity (cP)	0.8089	1.202e-002	9.409	0.8089
Cv (Semi-Ideal) (kJ/kgmole-C)	69.33	38.81	245.5	69.33
Mass Cv (Semi-Ideal) (kJ/kg-C)	3.846	1.815	1.943	3.846
Cv (kJ/kgmole-C)	67.56	33.96	245.5	67.56
Mass Cv (kJ/kg-C)	3.748	1.588	1.943	3.748
Cv (Ent. Method) (kJ/kgmole-C)	66.88	-3697	---	66.88
Mass Cv (Ent. Method) (kJ/kg-C)	3.711	-172.9	---	3.711
Cp/Cv (Ent. Method)	1.161	-1.275e-002	---	1.161
Reid VP at 37.8 C (psig)	---	---	97.87	---
True VP at 37.8 C (psig)	17.11	3607	475.9	17.11
Liq. Vol. Flow - Sum(Std. Cond) (barrel/day)	285.1	0.0000	0.0000	285.1
HHV Molar Basis (Std) (Btu/SCF)	46.45	---	---	46.45
HHV Mass Basis (Std) (kJ/kg)	2274	---	---	2274
CO2 Loading	---	---	---	---
CO2 App ML Con (kgmole/m3)	2.216e-002	---	---	2.216e-002
CO2 App WT Con (kgmol/kg)	2.204e-005	---	---	2.204e-005
Phase Fraction [Act. Vol. Basis]	0.0000	0.0000	0.0000	1.000
Mass Exergy (kJ/kg)	3.750	---	---	---
Viscosity Index	9.106e-002	---	---	---
Ideal Gas Cp/Cv	1.329	1.249	1.043	1.329
Ideal Gas Cp (kJ/kgmole-C)	33.60	41.72	200.0	33.60

* Specified by user.

Material Stream: Pandhi-W (continued)

Fluid Package: Basis-1
Property Package: Peng-Robinson

PROPERTIES

	Overall	Vapour Phase	Liquid Phase	Aqueous Phase
Mass Ideal Gas Cp (kJ/kg-C)	1.864	1.951	1.583	1.864
Bubble Point Pressure (psig)	12.46	---	---	---

COMPOSITION

Overall Phase

Vapour Fraction 0.0000

COMPONENTS	MOLAR FLOW (kgmole/h)	MOLE FRACTION	MASS FLOW (tonne/d)	MASS FRACTION	LIQUID VOLUME FLOW (m3/h)	LIQUID VOLUME FRACTION
Methane	0.0000	0.0000	0.0000	0.0000	0.0000	0.0000
Ethane	0.0000	0.0000	0.0000	0.0000	0.0000	0.0000
Propane	0.0000	0.0000	0.0000	0.0000	0.0000	0.0000
i-Butane	0.0000	0.0000	0.0000	0.0000	0.0000	0.0000
n-Butane	0.0000	0.0000	0.0000	0.0000	0.0000	0.0000
i-Pentane	0.0000	0.0000	0.0000	0.0000	0.0000	0.0000
n-Pentane	0.0000	0.0000	0.0000	0.0000	0.0000	0.0000
n-Hexane	0.0000	0.0000	0.0000	0.0000	0.0000	0.0000
Nitrogen	0.0008	0.0000	0.0006	0.0000	0.0000	0.0000
CO2	0.0423	0.0004	0.0446	0.0010	0.0023	0.0012
H2S	0.0000	0.0000	0.0000	0.0000	0.0000	0.0000
H2O	106.2938	0.9996	45.9575	0.9990	1.9188	0.9988
NBP[1]95*	0.0000	0.0000	0.0000	0.0000	0.0000	0.0000
NBP[1]121*	0.0000	0.0000	0.0000	0.0000	0.0000	0.0000
NBP[1]147*	0.0000	0.0000	0.0000	0.0000	0.0000	0.0000
NBP[1]171*	0.0000	0.0000	0.0000	0.0000	0.0000	0.0000
NBP[1]195*	0.0000	0.0000	0.0000	0.0000	0.0000	0.0000
NBP[1]222*	0.0000	0.0000	0.0000	0.0000	0.0000	0.0000
NBP[1]248*	0.0000	0.0000	0.0000	0.0000	0.0000	0.0000
NBP[1]273*	0.0000	0.0000	0.0000	0.0000	0.0000	0.0000
NBP[1]299*	0.0000	0.0000	0.0000	0.0000	0.0000	0.0000
NBP[1]325*	0.0000	0.0000	0.0000	0.0000	0.0000	0.0000
NBP[1]351*	0.0000	0.0000	0.0000	0.0000	0.0000	0.0000
NBP[1]377*	0.0000	0.0000	0.0000	0.0000	0.0000	0.0000
NBP[1]402*	0.0000	0.0000	0.0000	0.0000	0.0000	0.0000
NBP[1]428*	0.0000	0.0000	0.0000	0.0000	0.0000	0.0000
NBP[1]454*	0.0000	0.0000	0.0000	0.0000	0.0000	0.0000
NBP[1]480*	0.0000	0.0000	0.0000	0.0000	0.0000	0.0000
NBP[1]505*	0.0000	0.0000	0.0000	0.0000	0.0000	0.0000
NBP[1]531*	0.0000	0.0000	0.0000	0.0000	0.0000	0.0000
NBP[1]557*	0.0000	0.0000	0.0000	0.0000	0.0000	0.0000
NBP[1]582*	0.0000	0.0000	0.0000	0.0000	0.0000	0.0000
NBP[1]608*	0.0000	0.0000	0.0000	0.0000	0.0000	0.0000
NBP[1]634*	0.0000	0.0000	0.0000	0.0000	0.0000	0.0000
NBP[1]659*	0.0000	0.0000	0.0000	0.0000	0.0000	0.0000
NBP[1]685*	0.0000	0.0000	0.0000	0.0000	0.0000	0.0000
NBP[1]711*	0.0000	0.0000	0.0000	0.0000	0.0000	0.0000
NBP[1]736*	0.0000	0.0000	0.0000	0.0000	0.0000	0.0000
NBP[1]762*	0.0000	0.0000	0.0000	0.0000	0.0000	0.0000
NBP[1]788*	0.0000	0.0000	0.0000	0.0000	0.0000	0.0000
NBP[1]825*	0.0000	0.0000	0.0000	0.0000	0.0000	0.0000
NBP[1]873*	0.0000	0.0000	0.0000	0.0000	0.0000	0.0000
NBP[1]926*	0.0000	0.0000	0.0000	0.0000	0.0000	0.0000
NBP[1]978*	0.0000	0.0000	0.0000	0.0000	0.0000	0.0000
NBP[1]1021*	0.0000	0.0000	0.0000	0.0000	0.0000	0.0000
NBP[1]1075*	0.0000	0.0000	0.0000	0.0000	0.0000	0.0000
NBP[1]1123*	0.0000	0.0000	0.0000	0.0000	0.0000	0.0000
NBP[1]1173*	0.0000	0.0000	0.0000	0.0000	0.0000	0.0000
NBP[1]1250*	0.0000	0.0000	0.0000	0.0000	0.0000	0.0000

* Specified by user.

Material Stream: Pandhi-W (continued)

Fluid Package: Basis-1
Property Package: Peng-Robinson

COMPOSITION

Overall Phase (continued)

Vapour Fraction 0.0000

COMPONENTS	MOLAR FLOW (kgmole/h)	MOLE FRACTION	MASS FLOW (tonne/d)	MASS FRACTION	LIQUID VOLUME FLOW (m3/h)	LIQUID VOLUME FRACTION
NBP[1]1339*	0.0000	0.0000	0.0000	0.0000	0.0000	0.0000
NBP[1]1432*	0.0000	0.0000	0.0000	0.0000	0.0000	0.0000
NBP[1]1528*	0.0000	0.0000	0.0000	0.0000	0.0000	0.0000
NBP[1]1637*	0.0000	0.0000	0.0000	0.0000	0.0000	0.0000
NBP[1]1732*	0.0000	0.0000	0.0000	0.0000	0.0000	0.0000
NBP[1]1819*	0.0000	0.0000	0.0000	0.0000	0.0000	0.0000
NBP[1]1913*	0.0000	0.0000	0.0000	0.0000	0.0000	0.0000
Total	106.3369	1.0000	46.0026	1.0000	1.9210	1.0000

Vapour Phase

Phase Fraction 0.0000

COMPONENTS	MOLAR FLOW (kgmole/h)	MOLE FRACTION	MASS FLOW (tonne/d)	MASS FRACTION	LIQUID VOLUME FLOW (m3/h)	LIQUID VOLUME FRACTION
Methane	0.0000	0.7649	0.0000	0.5738	0.0000	0.6901
Ethane	0.0000	0.1032	0.0000	0.1451	0.0000	0.1469
Propane	0.0000	0.0507	0.0000	0.1046	0.0000	0.0743
i-Butane	0.0000	0.0059	0.0000	0.0161	0.0000	0.0103
n-Butane	0.0000	0.0108	0.0000	0.0292	0.0000	0.0181
i-Pentane	0.0000	0.0017	0.0000	0.0058	0.0000	0.0034
n-Pentane	0.0000	0.0017	0.0000	0.0059	0.0000	0.0033
n-Hexane	0.0000	0.0014	0.0000	0.0056	0.0000	0.0030
Nitrogen	0.0000	0.0208	0.0000	0.0272	0.0000	0.0122
CO2	0.0000	0.0341	0.0000	0.0701	0.0000	0.0306
H2S	0.0000	0.0000	0.0000	0.0000	0.0000	0.0000
H2O	0.0000	0.0015	0.0000	0.0012	0.0000	0.0004
NBP[1]95*	0.0000	0.0005	0.0000	0.0017	0.0000	0.0009
NBP[1]121*	0.0000	0.0005	0.0000	0.0017	0.0000	0.0009
NBP[1]147*	0.0000	0.0005	0.0000	0.0018	0.0000	0.0009
NBP[1]171*	0.0000	0.0006	0.0000	0.0027	0.0000	0.0013
NBP[1]195*	0.0000	0.0006	0.0000	0.0026	0.0000	0.0013
NBP[1]222*	0.0000	0.0003	0.0000	0.0013	0.0000	0.0006
NBP[1]248*	0.0000	0.0001	0.0000	0.0007	0.0000	0.0003
NBP[1]273*	0.0000	0.0001	0.0000	0.0004	0.0000	0.0002
NBP[1]299*	0.0000	0.0000	0.0000	0.0002	0.0000	0.0001
NBP[1]325*	0.0000	0.0000	0.0000	0.0001	0.0000	0.0000
NBP[1]351*	0.0000	0.0000	0.0000	0.0000	0.0000	0.0000
NBP[1]377*	0.0000	0.0000	0.0000	0.0000	0.0000	0.0000
NBP[1]402*	0.0000	0.0000	0.0000	0.0000	0.0000	0.0000
NBP[1]428*	0.0000	0.0000	0.0000	0.0000	0.0000	0.0000
NBP[1]454*	0.0000	0.0000	0.0000	0.0000	0.0000	0.0000
NBP[1]480*	0.0000	0.0000	0.0000	0.0000	0.0000	0.0000
NBP[1]505*	0.0000	0.0000	0.0000	0.0000	0.0000	0.0000
NBP[1]531*	0.0000	0.0000	0.0000	0.0000	0.0000	0.0000
NBP[1]557*	0.0000	0.0000	0.0000	0.0000	0.0000	0.0000
NBP[1]582*	0.0000	0.0000	0.0000	0.0000	0.0000	0.0000
NBP[1]608*	0.0000	0.0000	0.0000	0.0000	0.0000	0.0000
NBP[1]634*	0.0000	0.0000	0.0000	0.0000	0.0000	0.0000
NBP[1]659*	0.0000	0.0000	0.0000	0.0000	0.0000	0.0000
NBP[1]685*	0.0000	0.0000	0.0000	0.0000	0.0000	0.0000
NBP[1]711*	0.0000	0.0000	0.0000	0.0000	0.0000	0.0000
NBP[1]736*	0.0000	0.0000	0.0000	0.0000	0.0000	0.0000
NBP[1]762*	0.0000	0.0000	0.0000	0.0000	0.0000	0.0000
NBP[1]788*	0.0000	0.0000	0.0000	0.0000	0.0000	0.0000
NBP[1]825*	0.0000	0.0000	0.0000	0.0000	0.0000	0.0000
NBP[1]873*	0.0000	0.0000	0.0000	0.0000	0.0000	0.0000

* Specified by user.

Material Stream: Pandhi-W (continued)

Fluid Package: Basis-1
Property Package: Peng-Robinson

COMPOSITION

Vapour Phase (continued)

Phase Fraction 0.0000

COMPONENTS	MOLAR FLOW (kgmole/h)	MOLE FRACTION	MASS FLOW (tonne/d)	MASS FRACTION	LIQUID VOLUME FLOW (m3/h)	LIQUID VOLUME FRACTION
NBP[1]926*	0.0000	0.0000	0.0000	0.0000	0.0000	0.0000
NBP[1]978*	0.0000	0.0000	0.0000	0.0000	0.0000	0.0000
NBP[1]1021*	0.0000	0.0000	0.0000	0.0000	0.0000	0.0000
NBP[1]1075*	0.0000	0.0000	0.0000	0.0000	0.0000	0.0000
NBP[1]1123*	0.0000	0.0000	0.0000	0.0000	0.0000	0.0000
NBP[1]1173*	0.0000	0.0000	0.0000	0.0000	0.0000	0.0000
NBP[1]1250*	0.0000	0.0000	0.0000	0.0000	0.0000	0.0000
NBP[1]1339*	0.0000	0.0000	0.0000	0.0000	0.0000	0.0000
NBP[1]1432*	0.0000	0.0000	0.0000	0.0000	0.0000	0.0000
NBP[1]1528*	0.0000	0.0000	0.0000	0.0000	0.0000	0.0000
NBP[1]1637*	0.0000	0.0000	0.0000	0.0000	0.0000	0.0000
NBP[1]1732*	0.0000	0.0000	0.0000	0.0000	0.0000	0.0000
NBP[1]1819*	0.0000	0.0000	0.0000	0.0000	0.0000	0.0000
NBP[1]1913*	0.0000	0.0000	0.0000	0.0023	0.0000	0.0008
Total	0.0000	1.0000	0.0000	1.0000	0.0000	1.0000

Liquid Phase

Phase Fraction 0.0000

COMPONENTS	MOLAR FLOW (kgmole/h)	MOLE FRACTION	MASS FLOW (tonne/d)	MASS FRACTION	LIQUID VOLUME FLOW (m3/h)	LIQUID VOLUME FRACTION
Methane	0.0000	0.1136	0.0000	0.0144	0.0000	0.0364
Ethane	0.0000	0.0644	0.0000	0.0153	0.0000	0.0326
Propane	0.0000	0.0942	0.0000	0.0329	0.0000	0.0490
i-Butane	0.0000	0.0248	0.0000	0.0114	0.0000	0.0154
n-Butane	0.0000	0.0600	0.0000	0.0276	0.0000	0.0357
i-Pentane	0.0000	0.0217	0.0000	0.0124	0.0000	0.0150
n-Pentane	0.0000	0.0278	0.0000	0.0159	0.0000	0.0191
n-Hexane	0.0000	0.0618	0.0000	0.0422	0.0000	0.0481
Nitrogen	0.0000	0.0013	0.0000	0.0003	0.0000	0.0003
CO2	0.0000	0.0134	0.0000	0.0047	0.0000	0.0043
H2S	0.0000	0.0000	0.0000	0.0000	0.0000	0.0000
H2O	0.0000	0.0006	0.0000	0.0001	0.0000	0.0001
NBP[1]95*	0.0000	0.0082	0.0000	0.0044	0.0000	0.0049
NBP[1]121*	0.0000	0.0116	0.0000	0.0067	0.0000	0.0073
NBP[1]147*	0.0000	0.0172	0.0000	0.0109	0.0000	0.0118
NBP[1]171*	0.0000	0.0365	0.0000	0.0253	0.0000	0.0269
NBP[1]195*	0.0000	0.0516	0.0000	0.0382	0.0000	0.0401
NBP[1]222*	0.0000	0.0408	0.0000	0.0325	0.0000	0.0337
NBP[1]248*	0.0000	0.0353	0.0000	0.0302	0.0000	0.0309
NBP[1]273*	0.0000	0.0291	0.0000	0.0266	0.0000	0.0270
NBP[1]299*	0.0000	0.0230	0.0000	0.0225	0.0000	0.0225
NBP[1]325*	0.0000	0.0168	0.0000	0.0175	0.0000	0.0173
NBP[1]351*	0.0000	0.0137	0.0000	0.0151	0.0000	0.0148
NBP[1]377*	0.0000	0.0126	0.0000	0.0148	0.0000	0.0144
NBP[1]402*	0.0000	0.0116	0.0000	0.0145	0.0000	0.0139
NBP[1]428*	0.0000	0.0110	0.0000	0.0147	0.0000	0.0140
NBP[1]454*	0.0000	0.0110	0.0000	0.0157	0.0000	0.0148
NBP[1]480*	0.0000	0.0111	0.0000	0.0170	0.0000	0.0159
NBP[1]505*	0.0000	0.0108	0.0000	0.0176	0.0000	0.0162
NBP[1]531*	0.0000	0.0104	0.0000	0.0180	0.0000	0.0165
NBP[1]557*	0.0000	0.0100	0.0000	0.0185	0.0000	0.0168
NBP[1]582*	0.0000	0.0096	0.0000	0.0188	0.0000	0.0169
NBP[1]608*	0.0000	0.0092	0.0000	0.0192	0.0000	0.0171
NBP[1]634*	0.0000	0.0090	0.0000	0.0199	0.0000	0.0177
NBP[1]659*	0.0000	0.0089	0.0000	0.0207	0.0000	0.0182

* Specified by user.

Material Stream: Pandhi-W (continued)

Fluid Package: Basis-1
Property Package: Peng-Robinson

COMPOSITION

Liquid Phase (continued)

Phase Fraction 0.0000

COMPONENTS	MOLAR FLOW (kgmole/h)	MOLE FRACTION	MASS FLOW (tonne/d)	MASS FRACTION	LIQUID VOLUME FLOW (m3/h)	LIQUID VOLUME FRACTION
NBP[1]685*	0.0000	0.0092	0.0000	0.0227	0.0000	0.0198
NBP[1]711*	0.0000	0.0096	0.0000	0.0249	0.0000	0.0216
NBP[1]736*	0.0000	0.0095	0.0000	0.0258	0.0000	0.0221
NBP[1]762*	0.0000	0.0093	0.0000	0.0263	0.0000	0.0225
NBP[1]788*	0.0000	0.0089	0.0000	0.0267	0.0000	0.0226
NBP[1]825*	0.0000	0.0149	0.0000	0.0481	0.0000	0.0404
NBP[1]873*	0.0000	0.0103	0.0000	0.0359	0.0000	0.0298
NBP[1]926*	0.0000	0.0081	0.0000	0.0305	0.0000	0.0250
NBP[1]978*	0.0000	0.0083	0.0000	0.0343	0.0000	0.0277
NBP[1]1021*	0.0000	0.0041	0.0000	0.0179	0.0000	0.0143
NBP[1]1075*	0.0000	0.0025	0.0000	0.0117	0.0000	0.0093
NBP[1]1123*	0.0000	0.0023	0.0000	0.0116	0.0000	0.0091
NBP[1]1173*	0.0000	0.0017	0.0000	0.0088	0.0000	0.0069
NBP[1]1250*	0.0000	0.0022	0.0000	0.0125	0.0000	0.0096
NBP[1]1339*	0.0000	0.0020	0.0000	0.0130	0.0000	0.0098
NBP[1]1432*	0.0000	0.0014	0.0000	0.0100	0.0000	0.0074
NBP[1]1528*	0.0000	0.0010	0.0000	0.0076	0.0000	0.0055
NBP[1]1637*	0.0000	0.0007	0.0000	0.0056	0.0000	0.0041
NBP[1]1732*	0.0000	0.0006	0.0000	0.0048	0.0000	0.0034
NBP[1]1819*	0.0000	0.0005	0.0000	0.0047	0.0000	0.0034
NBP[1]1913*	0.0000	0.0000	0.0000	0.0000	0.0000	0.0000
Total	0.0000	1.0000	0.0000	1.0000	0.0000	1.0000

Aqueous Phase

Phase Fraction 1.000

COMPONENTS	MOLAR FLOW (kgmole/h)	MOLE FRACTION	MASS FLOW (tonne/d)	MASS FRACTION	LIQUID VOLUME FLOW (m3/h)	LIQUID VOLUME FRACTION
Methane	0.0000	0.0000	0.0000	0.0000	0.0000	0.0000
Ethane	0.0000	0.0000	0.0000	0.0000	0.0000	0.0000
Propane	0.0000	0.0000	0.0000	0.0000	0.0000	0.0000
i-Butane	0.0000	0.0000	0.0000	0.0000	0.0000	0.0000
n-Butane	0.0000	0.0000	0.0000	0.0000	0.0000	0.0000
i-Pentane	0.0000	0.0000	0.0000	0.0000	0.0000	0.0000
n-Pentane	0.0000	0.0000	0.0000	0.0000	0.0000	0.0000
n-Hexane	0.0000	0.0000	0.0000	0.0000	0.0000	0.0000
Nitrogen	0.0008	0.0000	0.0006	0.0000	0.0000	0.0000
CO2	0.0423	0.0004	0.0446	0.0010	0.0023	0.0012
H2S	0.0000	0.0000	0.0000	0.0000	0.0000	0.0000
H2O	106.2938	0.9996	45.9575	0.9990	1.9188	0.9988
NBP[1]95*	0.0000	0.0000	0.0000	0.0000	0.0000	0.0000
NBP[1]121*	0.0000	0.0000	0.0000	0.0000	0.0000	0.0000
NBP[1]147*	0.0000	0.0000	0.0000	0.0000	0.0000	0.0000
NBP[1]171*	0.0000	0.0000	0.0000	0.0000	0.0000	0.0000
NBP[1]195*	0.0000	0.0000	0.0000	0.0000	0.0000	0.0000
NBP[1]222*	0.0000	0.0000	0.0000	0.0000	0.0000	0.0000
NBP[1]248*	0.0000	0.0000	0.0000	0.0000	0.0000	0.0000
NBP[1]273*	0.0000	0.0000	0.0000	0.0000	0.0000	0.0000
NBP[1]299*	0.0000	0.0000	0.0000	0.0000	0.0000	0.0000
NBP[1]325*	0.0000	0.0000	0.0000	0.0000	0.0000	0.0000
NBP[1]351*	0.0000	0.0000	0.0000	0.0000	0.0000	0.0000
NBP[1]377*	0.0000	0.0000	0.0000	0.0000	0.0000	0.0000
NBP[1]402*	0.0000	0.0000	0.0000	0.0000	0.0000	0.0000
NBP[1]428*	0.0000	0.0000	0.0000	0.0000	0.0000	0.0000
NBP[1]454*	0.0000	0.0000	0.0000	0.0000	0.0000	0.0000
NBP[1]480*	0.0000	0.0000	0.0000	0.0000	0.0000	0.0000

* Specified by user.

Material Stream: Pandhi-W (continued)

Fluid Package: Basis-1
Property Package: Peng-Robinson

COMPOSITION

Aqueous Phase (continued)

Phase Fraction 1.000

COMPONENTS	MOLAR FLOW (kgmole/h)	MOLE FRACTION	MASS FLOW (tonne/d)	MASS FRACTION	LIQUID VOLUME FLOW (m3/h)	LIQUID VOLUME FRACTION
NBP[1]505*	0.0000	0.0000	0.0000	0.0000	0.0000	0.0000
NBP[1]531*	0.0000	0.0000	0.0000	0.0000	0.0000	0.0000
NBP[1]557*	0.0000	0.0000	0.0000	0.0000	0.0000	0.0000
NBP[1]582*	0.0000	0.0000	0.0000	0.0000	0.0000	0.0000
NBP[1]608*	0.0000	0.0000	0.0000	0.0000	0.0000	0.0000
NBP[1]634*	0.0000	0.0000	0.0000	0.0000	0.0000	0.0000
NBP[1]659*	0.0000	0.0000	0.0000	0.0000	0.0000	0.0000
NBP[1]685*	0.0000	0.0000	0.0000	0.0000	0.0000	0.0000
NBP[1]711*	0.0000	0.0000	0.0000	0.0000	0.0000	0.0000
NBP[1]736*	0.0000	0.0000	0.0000	0.0000	0.0000	0.0000
NBP[1]762*	0.0000	0.0000	0.0000	0.0000	0.0000	0.0000
NBP[1]788*	0.0000	0.0000	0.0000	0.0000	0.0000	0.0000
NBP[1]825*	0.0000	0.0000	0.0000	0.0000	0.0000	0.0000
NBP[1]873*	0.0000	0.0000	0.0000	0.0000	0.0000	0.0000
NBP[1]926*	0.0000	0.0000	0.0000	0.0000	0.0000	0.0000
NBP[1]978*	0.0000	0.0000	0.0000	0.0000	0.0000	0.0000
NBP[1]1021*	0.0000	0.0000	0.0000	0.0000	0.0000	0.0000
NBP[1]1075*	0.0000	0.0000	0.0000	0.0000	0.0000	0.0000
NBP[1]1123*	0.0000	0.0000	0.0000	0.0000	0.0000	0.0000
NBP[1]1173*	0.0000	0.0000	0.0000	0.0000	0.0000	0.0000
NBP[1]1250*	0.0000	0.0000	0.0000	0.0000	0.0000	0.0000
NBP[1]1339*	0.0000	0.0000	0.0000	0.0000	0.0000	0.0000
NBP[1]1432*	0.0000	0.0000	0.0000	0.0000	0.0000	0.0000
NBP[1]1528*	0.0000	0.0000	0.0000	0.0000	0.0000	0.0000
NBP[1]1637*	0.0000	0.0000	0.0000	0.0000	0.0000	0.0000
NBP[1]1732*	0.0000	0.0000	0.0000	0.0000	0.0000	0.0000
NBP[1]1819*	0.0000	0.0000	0.0000	0.0000	0.0000	0.0000
NBP[1]1913*	0.0000	0.0000	0.0000	0.0000	0.0000	0.0000
Total	106.3369	1.0000	46.0026	1.0000	1.9210	1.0000

Material Stream: Pandhi-Water

Fluid Package: Basis-1
Property Package: Peng-Robinson

CONDITIONS

		Overall	Vapour Phase	Liquid Phase	Aqueous Phase
Vapour / Phase Fraction		0.0000	0.0000	0.0000	1.0000
Temperature:	(F)	96.15	96.15	96.15	96.15
Pressure:	(psig)	645.0	645.0	645.0	645.0
Molar Flow	(MMSCFD)	2.135	0.0000	0.0000	2.135
Mass Flow	(tonne/d)	46.00	0.0000	0.0000	46.00
Std Ideal Liq Vol Flow	(barrel/day)	290.0	0.0000	0.0000	290.0
Molar Enthalpy	(kJ/kgmole)	-2.854e+005	-8.942e+004	-2.700e+005	-2.854e+005
Molar Entropy	(kJ/kgmole-C)	56.42	156.4	216.0	56.42
Heat Flow	(MMBtu/hr)	-28.76	0.0000	0.0000	-28.76
Liq Vol Flow @Std Cond	(barrel/day)	285.1 *	0.0000	0.0000	285.1

PROPERTIES

		Overall	Vapour Phase	Liquid Phase	Aqueous Phase
Molecular Weight		18.03	21.43	117.5	18.03
Molar Density	(kgmole/m3)	55.52	2.054	6.391	55.52
Mass Density	(kg/m3)	1001	44.03	750.9	1001
Act. Volume Flow	(barrel/day)	289.1	0.0000	0.0000	289.1
Mass Enthalpy	(kJ/kg)	-1.583e+004	-4173	-2298	-1.583e+004
Mass Entropy	(kJ/kg-C)	3.130	7.301	1.838	3.130

* Specified by user.

Material Stream: Pandhi-Water (continued)

Fluid Package: Basis-1
Property Package: Peng-Robinson

PROPERTIES

	Overall	Vapour Phase	Liquid Phase	Aqueous Phase
Heat Capacity (kJ/kgmole-C)	77.63	50.16	241.4	77.63
Mass Heat Capacity (kJ/kg-C)	4.306	2.341	2.055	4.306
LHV Molar Basis (Std) (Btu/SCF)	3.285e-004	---	---	3.285e-004
LHV Mass Basis (Std) (kJ/kg)	1.609e-002	---	---	1.609e-002
Phase Fraction [Vol. Basis]	---	---	---	1.000
Phase Fraction [Mass Basis]	0.0000	0.0000	0.0000	1.000
Partial Pressure of CO2 (psig)	-14.70	---	---	---
Cost Based on Flow (Cost/s)	0.0000	0.0000	0.0000	0.0000
Act. Gas Flow (ACT_m3/h)	---	---	---	---
Avg. Liq. Density (kgmole/m3)	55.35	16.83	6.314	55.35
Specific Heat (kJ/kgmole-C)	77.63	50.16	241.4	77.63
Std. Gas Flow (STD_m3/h)	2514	0.0000	0.0000	2514
Std. Ideal Liq. Mass Density (kg/m3)	997.7	360.7	741.9	997.7
Act. Liq. Flow (barrel/day)	289.1	---	---	289.1
Z Factor	---	0.8623	0.2772	3.191e-002
Watson K	8.495	17.25	12.04	8.495
User Property	---	---	---	---
Partial Pressure of H2S (psig)	-14.70	---	---	---
Cp/(Cp - R)	1.120	1.199	1.036	1.120
Cp/Cv	1.152	1.448	1.238	1.152
Heat of Vap. (kJ/kgmole)	3.101e+004	---	---	---
Kinematic Viscosity (cSt)	0.7087	0.2860	6.133	0.7087
Liq. Mass Density (Std. Cond) (kg/m3)	1015	0.9099	771.3	1015
Liq. Vol. Flow (Std. Cond) (barrel/day)	285.1	0.0000	0.0000	285.1
Liquid Fraction	1.000	0.0000	1.000	1.000
Molar Volume (m3/kgmole)	1.801e-002	0.4867	0.1565	1.801e-002
Mass Heat of Vap. (kJ/kg)	1720	---	---	---
Phase Fraction [Molar Basis]	0.0000	0.0000	0.0000	1.0000
Surface Tension (dyne/cm)	70.22	---	14.21	70.22
Thermal Conductivity (W/m-K)	0.6259	3.531e-002	9.629e-002	0.6259
Viscosity (cP)	0.7094	1.259e-002	4.605	0.7094
Cv (Semi-Ideal) (kJ/kgmole-C)	69.31	41.85	233.1	69.31
Mass Cv (Semi-Ideal) (kJ/kg-C)	3.845	1.953	1.984	3.845
Cv (kJ/kgmole-C)	67.36	34.66	195.0	67.36
Mass Cv (kJ/kg-C)	3.736	1.617	1.660	3.736
Cv (Ent. Method) (kJ/kgmole-C)	66.70	---	---	66.70
Mass Cv (Ent. Method) (kJ/kg-C)	3.700	---	---	3.700
Cp/Cv (Ent. Method)	1.164	---	---	1.164
Reid VP at 37.8 C (psig)	---	---	134.3	---
True VP at 37.8 C (psig)	32.98	3720	655.3	32.98
Liq. Vol. Flow - Sum(Std. Cond) (barrel/day)	285.1	0.0000	0.0000	285.1
HHV Molar Basis (Std) (Btu/SCF)	46.44	---	---	46.44
HHV Mass Basis (Std) (kJ/kg)	2274	---	---	2274
CO2 Loading	---	---	---	---
CO2 App ML Con (kgmole/m3)	2.596e-002	---	---	2.596e-002
CO2 App WT Con (kgmol/kg)	2.594e-005	---	---	2.594e-005
Phase Fraction [Act. Vol. Basis]	0.0000	0.0000	0.0000	1.000
Mass Exergy (kJ/kg)	6.046	---	---	---
Viscosity Index	-1.940	---	---	---
Ideal Gas Cp/Cv	1.328	1.246	1.046	1.328
Ideal Gas Cp (kJ/kgmole-C)	33.64	42.18	190.0	33.64
Mass Ideal Gas Cp (kJ/kg-C)	1.866	1.968	1.617	1.866
Bubble Point Pressure (psig)	31.32	---	---	---

* Specified by user.

Material Stream: Pandhi-Water (continued)

Fluid Package: Basis-1
Property Package: Peng-Robinson

COMPOSITION

Overall Phase

Vapour Fraction 0.0000

COMPONENTS	MOLAR FLOW (kgmole/h)	MOLE FRACTION	MASS FLOW (tonne/d)	MASS FRACTION	LIQUID VOLUME FLOW (m3/h)	LIQUID VOLUME FRACTION
Methane	0.0000	0.0000	0.0000	0.0000	0.0000	0.0000
Ethane	0.0000	0.0000	0.0000	0.0000	0.0000	0.0000
Propane	0.0000	0.0000	0.0000	0.0000	0.0000	0.0000
i-Butane	0.0000	0.0000	0.0000	0.0000	0.0000	0.0000
n-Butane	0.0000	0.0000	0.0000	0.0000	0.0000	0.0000
i-Pentane	0.0000	0.0000	0.0000	0.0000	0.0000	0.0000
n-Pentane	0.0000	0.0000	0.0000	0.0000	0.0000	0.0000
n-Hexane	0.0000	0.0000	0.0000	0.0000	0.0000	0.0000
Nitrogen	0.0011	0.0000	0.0007	0.0000	0.0000	0.0000
CO2	0.0497	0.0005	0.0525	0.0011	0.0027	0.0014
H2S	0.0000	0.0000	0.0000	0.0000	0.0000	0.0000
H2O	106.2698	0.9995	45.9471	0.9988	1.9183	0.9986
NBP[1]95*	0.0000	0.0000	0.0000	0.0000	0.0000	0.0000
NBP[1]121*	0.0000	0.0000	0.0000	0.0000	0.0000	0.0000
NBP[1]147*	0.0000	0.0000	0.0000	0.0000	0.0000	0.0000
NBP[1]171*	0.0000	0.0000	0.0000	0.0000	0.0000	0.0000
NBP[1]195*	0.0000	0.0000	0.0000	0.0000	0.0000	0.0000
NBP[1]222*	0.0000	0.0000	0.0000	0.0000	0.0000	0.0000
NBP[1]248*	0.0000	0.0000	0.0000	0.0000	0.0000	0.0000
NBP[1]273*	0.0000	0.0000	0.0000	0.0000	0.0000	0.0000
NBP[1]299*	0.0000	0.0000	0.0000	0.0000	0.0000	0.0000
NBP[1]325*	0.0000	0.0000	0.0000	0.0000	0.0000	0.0000
NBP[1]351*	0.0000	0.0000	0.0000	0.0000	0.0000	0.0000
NBP[1]377*	0.0000	0.0000	0.0000	0.0000	0.0000	0.0000
NBP[1]402*	0.0000	0.0000	0.0000	0.0000	0.0000	0.0000
NBP[1]428*	0.0000	0.0000	0.0000	0.0000	0.0000	0.0000
NBP[1]454*	0.0000	0.0000	0.0000	0.0000	0.0000	0.0000
NBP[1]480*	0.0000	0.0000	0.0000	0.0000	0.0000	0.0000
NBP[1]505*	0.0000	0.0000	0.0000	0.0000	0.0000	0.0000
NBP[1]531*	0.0000	0.0000	0.0000	0.0000	0.0000	0.0000
NBP[1]557*	0.0000	0.0000	0.0000	0.0000	0.0000	0.0000
NBP[1]582*	0.0000	0.0000	0.0000	0.0000	0.0000	0.0000
NBP[1]608*	0.0000	0.0000	0.0000	0.0000	0.0000	0.0000
NBP[1]634*	0.0000	0.0000	0.0000	0.0000	0.0000	0.0000
NBP[1]659*	0.0000	0.0000	0.0000	0.0000	0.0000	0.0000
NBP[1]685*	0.0000	0.0000	0.0000	0.0000	0.0000	0.0000
NBP[1]711*	0.0000	0.0000	0.0000	0.0000	0.0000	0.0000
NBP[1]736*	0.0000	0.0000	0.0000	0.0000	0.0000	0.0000
NBP[1]762*	0.0000	0.0000	0.0000	0.0000	0.0000	0.0000
NBP[1]788*	0.0000	0.0000	0.0000	0.0000	0.0000	0.0000
NBP[1]825*	0.0000	0.0000	0.0000	0.0000	0.0000	0.0000
NBP[1]873*	0.0000	0.0000	0.0000	0.0000	0.0000	0.0000
NBP[1]926*	0.0000	0.0000	0.0000	0.0000	0.0000	0.0000
NBP[1]978*	0.0000	0.0000	0.0000	0.0000	0.0000	0.0000
NBP[1]1021*	0.0000	0.0000	0.0000	0.0000	0.0000	0.0000
NBP[1]1075*	0.0000	0.0000	0.0000	0.0000	0.0000	0.0000
NBP[1]1123*	0.0000	0.0000	0.0000	0.0000	0.0000	0.0000
NBP[1]1173*	0.0000	0.0000	0.0000	0.0000	0.0000	0.0000
NBP[1]1250*	0.0000	0.0000	0.0000	0.0000	0.0000	0.0000
NBP[1]1339*	0.0000	0.0000	0.0000	0.0000	0.0000	0.0000
NBP[1]1432*	0.0000	0.0000	0.0000	0.0000	0.0000	0.0000
NBP[1]1528*	0.0000	0.0000	0.0000	0.0000	0.0000	0.0000
NBP[1]1637*	0.0000	0.0000	0.0000	0.0000	0.0000	0.0000
NBP[1]1732*	0.0000	0.0000	0.0000	0.0000	0.0000	0.0000

* Specified by user.

Material Stream: Pandhi-Water (continued)

Fluid Package: Basis-1
Property Package: Peng-Robinson

COMPOSITION

Overall Phase (continued)

Vapour Fraction 0.0000

COMPONENTS	MOLAR FLOW (kgmole/h)	MOLE FRACTION	MASS FLOW (tonne/d)	MASS FRACTION	LIQUID VOLUME FLOW (m3/h)	LIQUID VOLUME FRACTION
NBP[1]1819*	0.0000	0.0000	0.0000	0.0000	0.0000	0.0000
NBP[1]1913*	0.0000	0.0000	0.0000	0.0000	0.0000	0.0000
Total	106.3207	1.0000	46.0003	1.0000	1.9210	1.0000

Vapour Phase

Phase Fraction 0.0000

COMPONENTS	MOLAR FLOW (kgmole/h)	MOLE FRACTION	MASS FLOW (tonne/d)	MASS FRACTION	LIQUID VOLUME FLOW (m3/h)	LIQUID VOLUME FRACTION
Methane	0.0000	0.7658	0.0000	0.5733	0.0000	0.6906
Ethane	0.0000	0.1025	0.0000	0.1439	0.0000	0.1459
Propane	0.0000	0.0500	0.0000	0.1029	0.0000	0.0733
i-Butane	0.0000	0.0058	0.0000	0.0158	0.0000	0.0102
n-Butane	0.0000	0.0106	0.0000	0.0288	0.0000	0.0178
i-Pentane	0.0000	0.0017	0.0000	0.0059	0.0000	0.0034
n-Pentane	0.0000	0.0018	0.0000	0.0060	0.0000	0.0034
n-Hexane	0.0000	0.0015	0.0000	0.0061	0.0000	0.0033
Nitrogen	0.0000	0.0209	0.0000	0.0273	0.0000	0.0122
CO2	0.0000	0.0339	0.0000	0.0697	0.0000	0.0305
H2S	0.0000	0.0000	0.0000	0.0000	0.0000	0.0000
H2O	0.0000	0.0016	0.0000	0.0013	0.0000	0.0005
NBP[1]95*	0.0000	0.0005	0.0000	0.0017	0.0000	0.0009
NBP[1]121*	0.0000	0.0005	0.0000	0.0017	0.0000	0.0009
NBP[1]147*	0.0000	0.0005	0.0000	0.0019	0.0000	0.0010
NBP[1]171*	0.0000	0.0007	0.0000	0.0030	0.0000	0.0015
NBP[1]195*	0.0000	0.0007	0.0000	0.0030	0.0000	0.0015
NBP[1]222*	0.0000	0.0003	0.0000	0.0016	0.0000	0.0008
NBP[1]248*	0.0000	0.0002	0.0000	0.0009	0.0000	0.0005
NBP[1]273*	0.0000	0.0001	0.0000	0.0005	0.0000	0.0002
NBP[1]299*	0.0000	0.0000	0.0000	0.0003	0.0000	0.0001
NBP[1]325*	0.0000	0.0000	0.0000	0.0001	0.0000	0.0001
NBP[1]351*	0.0000	0.0000	0.0000	0.0001	0.0000	0.0000
NBP[1]377*	0.0000	0.0000	0.0000	0.0000	0.0000	0.0000
NBP[1]402*	0.0000	0.0000	0.0000	0.0000	0.0000	0.0000
NBP[1]428*	0.0000	0.0000	0.0000	0.0000	0.0000	0.0000
NBP[1]454*	0.0000	0.0000	0.0000	0.0000	0.0000	0.0000
NBP[1]480*	0.0000	0.0000	0.0000	0.0000	0.0000	0.0000
NBP[1]505*	0.0000	0.0000	0.0000	0.0000	0.0000	0.0000
NBP[1]531*	0.0000	0.0000	0.0000	0.0000	0.0000	0.0000
NBP[1]557*	0.0000	0.0000	0.0000	0.0000	0.0000	0.0000
NBP[1]582*	0.0000	0.0000	0.0000	0.0000	0.0000	0.0000
NBP[1]608*	0.0000	0.0000	0.0000	0.0000	0.0000	0.0000
NBP[1]634*	0.0000	0.0000	0.0000	0.0000	0.0000	0.0000
NBP[1]659*	0.0000	0.0000	0.0000	0.0000	0.0000	0.0000
NBP[1]685*	0.0000	0.0000	0.0000	0.0000	0.0000	0.0000
NBP[1]711*	0.0000	0.0000	0.0000	0.0000	0.0000	0.0000
NBP[1]736*	0.0000	0.0000	0.0000	0.0000	0.0000	0.0000
NBP[1]762*	0.0000	0.0000	0.0000	0.0000	0.0000	0.0000
NBP[1]788*	0.0000	0.0000	0.0000	0.0000	0.0000	0.0000
NBP[1]825*	0.0000	0.0000	0.0000	0.0000	0.0000	0.0000
NBP[1]873*	0.0000	0.0000	0.0000	0.0000	0.0000	0.0000
NBP[1]926*	0.0000	0.0000	0.0000	0.0000	0.0000	0.0000
NBP[1]978*	0.0000	0.0000	0.0000	0.0000	0.0000	0.0000
NBP[1]1021*	0.0000	0.0000	0.0000	0.0000	0.0000	0.0000
NBP[1]1075*	0.0000	0.0000	0.0000	0.0000	0.0000	0.0000
NBP[1]1123*	0.0000	0.0000	0.0000	0.0000	0.0000	0.0000

* Specified by user.

Material Stream: Pandhi-Water (continued)

Fluid Package: Basis-1
Property Package: Peng-Robinson

COMPOSITION

Vapour Phase (continued)

Phase Fraction 0.0000

COMPONENTS	MOLAR FLOW (kgmole/h)	MOLE FRACTION	MASS FLOW (tonne/d)	MASS FRACTION	LIQUID VOLUME FLOW (m3/h)	LIQUID VOLUME FRACTION
NBP[1]1173*	0.0000	0.0000	0.0000	0.0000	0.0000	0.0000
NBP[1]1250*	0.0000	0.0000	0.0000	0.0000	0.0000	0.0000
NBP[1]1339*	0.0000	0.0000	0.0000	0.0000	0.0000	0.0000
NBP[1]1432*	0.0000	0.0000	0.0000	0.0000	0.0000	0.0000
NBP[1]1528*	0.0000	0.0000	0.0000	0.0000	0.0000	0.0000
NBP[1]1637*	0.0000	0.0000	0.0000	0.0000	0.0000	0.0000
NBP[1]1732*	0.0000	0.0000	0.0000	0.0000	0.0000	0.0000
NBP[1]1819*	0.0000	0.0000	0.0000	0.0017	0.0000	0.0006
NBP[1]1913*	0.0000	0.0000	0.0000	0.0023	0.0000	0.0008
Total	0.0000	1.0000	0.0000	1.0000	0.0000	1.0000

Liquid Phase

Phase Fraction 0.0000

COMPONENTS	MOLAR FLOW (kgmole/h)	MOLE FRACTION	MASS FLOW (tonne/d)	MASS FRACTION	LIQUID VOLUME FLOW (m3/h)	LIQUID VOLUME FRACTION
Methane	0.0000	0.1522	0.0000	0.0208	0.0000	0.0515
Ethane	0.0000	0.0760	0.0000	0.0195	0.0000	0.0406
Propane	0.0000	0.1002	0.0000	0.0376	0.0000	0.0551
i-Butane	0.0000	0.0244	0.0000	0.0121	0.0000	0.0160
n-Butane	0.0000	0.0579	0.0000	0.0286	0.0000	0.0364
i-Pentane	0.0000	0.0198	0.0000	0.0122	0.0000	0.0145
n-Pentane	0.0000	0.0252	0.0000	0.0155	0.0000	0.0182
n-Hexane	0.0000	0.0551	0.0000	0.0404	0.0000	0.0452
Nitrogen	0.0000	0.0018	0.0000	0.0004	0.0000	0.0004
CO2	0.0000	0.0166	0.0000	0.0062	0.0000	0.0056
H2S	0.0000	0.0000	0.0000	0.0000	0.0000	0.0000
H2O	0.0000	0.0008	0.0000	0.0001	0.0000	0.0001
NBP[1]95*	0.0000	0.0075	0.0000	0.0043	0.0000	0.0047
NBP[1]121*	0.0000	0.0104	0.0000	0.0065	0.0000	0.0070
NBP[1]147*	0.0000	0.0154	0.0000	0.0105	0.0000	0.0111
NBP[1]171*	0.0000	0.0326	0.0000	0.0243	0.0000	0.0253
NBP[1]195*	0.0000	0.0462	0.0000	0.0368	0.0000	0.0379
NBP[1]222*	0.0000	0.0368	0.0000	0.0315	0.0000	0.0321
NBP[1]248*	0.0000	0.0319	0.0000	0.0294	0.0000	0.0296
NBP[1]273*	0.0000	0.0264	0.0000	0.0260	0.0000	0.0259
NBP[1]299*	0.0000	0.0210	0.0000	0.0221	0.0000	0.0217
NBP[1]325*	0.0000	0.0154	0.0000	0.0172	0.0000	0.0167
NBP[1]351*	0.0000	0.0126	0.0000	0.0149	0.0000	0.0144
NBP[1]377*	0.0000	0.0116	0.0000	0.0146	0.0000	0.0140
NBP[1]402*	0.0000	0.0106	0.0000	0.0143	0.0000	0.0135
NBP[1]428*	0.0000	0.0101	0.0000	0.0146	0.0000	0.0136
NBP[1]454*	0.0000	0.0101	0.0000	0.0156	0.0000	0.0144
NBP[1]480*	0.0000	0.0103	0.0000	0.0168	0.0000	0.0154
NBP[1]505*	0.0000	0.0099	0.0000	0.0174	0.0000	0.0158
NBP[1]531*	0.0000	0.0096	0.0000	0.0179	0.0000	0.0161
NBP[1]557*	0.0000	0.0092	0.0000	0.0183	0.0000	0.0163
NBP[1]582*	0.0000	0.0088	0.0000	0.0186	0.0000	0.0165
NBP[1]608*	0.0000	0.0085	0.0000	0.0190	0.0000	0.0167
NBP[1]634*	0.0000	0.0083	0.0000	0.0197	0.0000	0.0172
NBP[1]659*	0.0000	0.0082	0.0000	0.0205	0.0000	0.0177
NBP[1]685*	0.0000	0.0085	0.0000	0.0224	0.0000	0.0192
NBP[1]711*	0.0000	0.0089	0.0000	0.0247	0.0000	0.0210
NBP[1]736*	0.0000	0.0088	0.0000	0.0255	0.0000	0.0215
NBP[1]762*	0.0000	0.0086	0.0000	0.0261	0.0000	0.0219
NBP[1]788*	0.0000	0.0082	0.0000	0.0265	0.0000	0.0220

* Specified by user.

Material Stream: Pandhi-Water (continued)

Fluid Package: Basis-1
Property Package: Peng-Robinson

COMPOSITION

Liquid Phase (continued)

Phase Fraction 0.0000

COMPONENTS	MOLAR FLOW (kgmole/h)	MOLE FRACTION	MASS FLOW (tonne/d)	MASS FRACTION	LIQUID VOLUME FLOW (m3/h)	LIQUID VOLUME FRACTION
NBP[1]825*	0.0000	0.0137	0.0000	0.0477	0.0000	0.0393
NBP[1]873*	0.0000	0.0095	0.0000	0.0356	0.0000	0.0290
NBP[1]926*	0.0000	0.0074	0.0000	0.0302	0.0000	0.0243
NBP[1]978*	0.0000	0.0076	0.0000	0.0340	0.0000	0.0270
NBP[1]1021*	0.0000	0.0038	0.0000	0.0177	0.0000	0.0139
NBP[1]1075*	0.0000	0.0023	0.0000	0.0116	0.0000	0.0090
NBP[1]1123*	0.0000	0.0022	0.0000	0.0115	0.0000	0.0089
NBP[1]1173*	0.0000	0.0016	0.0000	0.0088	0.0000	0.0067
NBP[1]1250*	0.0000	0.0020	0.0000	0.0124	0.0000	0.0094
NBP[1]1339*	0.0000	0.0019	0.0000	0.0128	0.0000	0.0095
NBP[1]1432*	0.0000	0.0013	0.0000	0.0099	0.0000	0.0072
NBP[1]1528*	0.0000	0.0009	0.0000	0.0075	0.0000	0.0054
NBP[1]1637*	0.0000	0.0007	0.0000	0.0056	0.0000	0.0040
NBP[1]1732*	0.0000	0.0005	0.0000	0.0047	0.0000	0.0033
NBP[1]1819*	0.0000	0.0000	0.0000	0.0004	0.0000	0.0002
NBP[1]1913*	0.0000	0.0000	0.0000	0.0000	0.0000	0.0000
Total	0.0000	1.0000	0.0000	1.0000	0.0000	1.0000

Aqueous Phase

Phase Fraction 1.000

COMPONENTS	MOLAR FLOW (kgmole/h)	MOLE FRACTION	MASS FLOW (tonne/d)	MASS FRACTION	LIQUID VOLUME FLOW (m3/h)	LIQUID VOLUME FRACTION
Methane	0.0000	0.0000	0.0000	0.0000	0.0000	0.0000
Ethane	0.0000	0.0000	0.0000	0.0000	0.0000	0.0000
Propane	0.0000	0.0000	0.0000	0.0000	0.0000	0.0000
i-Butane	0.0000	0.0000	0.0000	0.0000	0.0000	0.0000
n-Butane	0.0000	0.0000	0.0000	0.0000	0.0000	0.0000
i-Pentane	0.0000	0.0000	0.0000	0.0000	0.0000	0.0000
n-Pentane	0.0000	0.0000	0.0000	0.0000	0.0000	0.0000
n-Hexane	0.0000	0.0000	0.0000	0.0000	0.0000	0.0000
Nitrogen	0.0011	0.0000	0.0007	0.0000	0.0000	0.0000
CO2	0.0497	0.0005	0.0525	0.0011	0.0027	0.0014
H2S	0.0000	0.0000	0.0000	0.0000	0.0000	0.0000
H2O	106.2698	0.9995	45.9471	0.9988	1.9183	0.9986
NBP[1]95*	0.0000	0.0000	0.0000	0.0000	0.0000	0.0000
NBP[1]121*	0.0000	0.0000	0.0000	0.0000	0.0000	0.0000
NBP[1]147*	0.0000	0.0000	0.0000	0.0000	0.0000	0.0000
NBP[1]171*	0.0000	0.0000	0.0000	0.0000	0.0000	0.0000
NBP[1]195*	0.0000	0.0000	0.0000	0.0000	0.0000	0.0000
NBP[1]222*	0.0000	0.0000	0.0000	0.0000	0.0000	0.0000
NBP[1]248*	0.0000	0.0000	0.0000	0.0000	0.0000	0.0000
NBP[1]273*	0.0000	0.0000	0.0000	0.0000	0.0000	0.0000
NBP[1]299*	0.0000	0.0000	0.0000	0.0000	0.0000	0.0000
NBP[1]325*	0.0000	0.0000	0.0000	0.0000	0.0000	0.0000
NBP[1]351*	0.0000	0.0000	0.0000	0.0000	0.0000	0.0000
NBP[1]377*	0.0000	0.0000	0.0000	0.0000	0.0000	0.0000
NBP[1]402*	0.0000	0.0000	0.0000	0.0000	0.0000	0.0000
NBP[1]428*	0.0000	0.0000	0.0000	0.0000	0.0000	0.0000
NBP[1]454*	0.0000	0.0000	0.0000	0.0000	0.0000	0.0000
NBP[1]480*	0.0000	0.0000	0.0000	0.0000	0.0000	0.0000
NBP[1]505*	0.0000	0.0000	0.0000	0.0000	0.0000	0.0000
NBP[1]531*	0.0000	0.0000	0.0000	0.0000	0.0000	0.0000
NBP[1]557*	0.0000	0.0000	0.0000	0.0000	0.0000	0.0000
NBP[1]582*	0.0000	0.0000	0.0000	0.0000	0.0000	0.0000
NBP[1]608*	0.0000	0.0000	0.0000	0.0000	0.0000	0.0000

* Specified by user.

Material Stream: Pandhi-Water (continued)

Fluid Package: Basis-1
Property Package: Peng-Robinson

COMPOSITION

Aqueous Phase (continued)

Phase Fraction 1.000

COMPONENTS	MOLAR FLOW (kgmole/h)	MOLE FRACTION	MASS FLOW (tonne/d)	MASS FRACTION	LIQUID VOLUME FLOW (m3/h)	LIQUID VOLUME FRACTION
NBP[1]634*	0.0000	0.0000	0.0000	0.0000	0.0000	0.0000
NBP[1]659*	0.0000	0.0000	0.0000	0.0000	0.0000	0.0000
NBP[1]685*	0.0000	0.0000	0.0000	0.0000	0.0000	0.0000
NBP[1]711*	0.0000	0.0000	0.0000	0.0000	0.0000	0.0000
NBP[1]736*	0.0000	0.0000	0.0000	0.0000	0.0000	0.0000
NBP[1]762*	0.0000	0.0000	0.0000	0.0000	0.0000	0.0000
NBP[1]788*	0.0000	0.0000	0.0000	0.0000	0.0000	0.0000
NBP[1]825*	0.0000	0.0000	0.0000	0.0000	0.0000	0.0000
NBP[1]873*	0.0000	0.0000	0.0000	0.0000	0.0000	0.0000
NBP[1]926*	0.0000	0.0000	0.0000	0.0000	0.0000	0.0000
NBP[1]978*	0.0000	0.0000	0.0000	0.0000	0.0000	0.0000
NBP[1]1021*	0.0000	0.0000	0.0000	0.0000	0.0000	0.0000
NBP[1]1075*	0.0000	0.0000	0.0000	0.0000	0.0000	0.0000
NBP[1]1123*	0.0000	0.0000	0.0000	0.0000	0.0000	0.0000
NBP[1]1173*	0.0000	0.0000	0.0000	0.0000	0.0000	0.0000
NBP[1]1250*	0.0000	0.0000	0.0000	0.0000	0.0000	0.0000
NBP[1]1339*	0.0000	0.0000	0.0000	0.0000	0.0000	0.0000
NBP[1]1432*	0.0000	0.0000	0.0000	0.0000	0.0000	0.0000
NBP[1]1528*	0.0000	0.0000	0.0000	0.0000	0.0000	0.0000
NBP[1]1637*	0.0000	0.0000	0.0000	0.0000	0.0000	0.0000
NBP[1]1732*	0.0000	0.0000	0.0000	0.0000	0.0000	0.0000
NBP[1]1819*	0.0000	0.0000	0.0000	0.0000	0.0000	0.0000
NBP[1]1913*	0.0000	0.0000	0.0000	0.0000	0.0000	0.0000
Total	106.3207	1.0000	46.0003	1.0000	1.9210	1.0000

Material Stream: permeate

Fluid Package: Basis-1
Property Package: Peng-Robinson

CONDITIONS

		Overall	Vapour Phase
Vapour / Phase Fraction		1.0000	1.0000
Temperature:	(F)	100.0 *	100.0
Pressure:	(psig)	20.00 *	20.00
Molar Flow	(MMSCFD)	2.810 *	2.810
Mass Flow	(tonne/d)	76.19	76.19
Std Ideal Liq Vol Flow	(barrel/day)	1140	1140
Molar Enthalpy	(kJ/kgmole)	-1.319e+005	-1.319e+005
Molar Entropy	(kJ/kgmole-C)	181.4	181.4
Heat Flow	(MMBtu/hr)	-17.50	-17.50
Liq Vol Flow @Std Cond	(barrel/day)	4.980e+005 *	4.980e+005

PROPERTIES

		Overall	Vapour Phase
Molecular Weight		22.68	22.68
Molar Density	(kgmole/m3)	9.306e-002	9.306e-002
Mass Density	(kg/m3)	2.111	2.111
Act. Volume Flow	(barrel/day)	2.270e+005	2.270e+005
Mass Enthalpy	(kJ/kg)	-5817	-5817
Mass Entropy	(kJ/kg-C)	7.998	7.998
Heat Capacity	(kJ/kgmole-C)	37.74	37.74
Mass Heat Capacity	(kJ/kg-C)	1.664	1.664
LHV Molar Basis (Std)	(Btu/SCF)	727.1	727.1
LHV Mass Basis (Std)	(kJ/kg)	2.829e+004	2.829e+004
Phase Fraction [Vol. Basis]		1.000	1.000

* Specified by user.

Material Stream: permeate (continued)

Fluid Package: Basis-1
Property Package: Peng-Robinson

PROPERTIES

	Overall	Vapour Phase			
Phase Fraction [Mass Basis]	1.000	1.000			
Partial Pressure of CO2 (psig)	-8.100	---			
Cost Based on Flow (Cost/s)	0.0000	0.0000			
Act. Gas Flow (ACT_m3/h)	1504	1504			
Avg. Liq. Density (kgmole/m3)	18.53	18.53			
Specific Heat (kJ/kgmole-C)	37.74	37.74			
Std. Gas Flow (STD_m3/h)	3309	3309			
Std. Ideal Liq. Mass Density (kg/m3)	420.3	420.3			
Act. Liq. Flow (barrel/day)	---	---			
Z Factor	0.9944	0.9944			
Watson K	14.59	14.59			
User Property	---	---			
Partial Pressure of H2S (psig)	-14.70	---			
Cp/(Cp - R)	1.283	1.283			
Cp/Cv	1.292	1.292			
Heat of Vap. (kJ/kgmole)	1.372e+004	---			
Kinematic Viscosity (cSt)	5.993	5.993			
Liq. Mass Density (Std. Cond) (kg/m3)	0.9622	0.9622			
Liq. Vol. Flow (Std. Cond) (barrel/day)	4.980e+005	4.980e+005			
Liquid Fraction	0.0000	0.0000			
Molar Volume (m3/kgmole)	10.75	10.75			
Mass Heat of Vap. (kJ/kg)	604.9	---			
Phase Fraction [Molar Basis]	1.0000	1.0000			
Surface Tension (dyne/cm)	---	---			
Thermal Conductivity (W/m-K)	3.032e-002	3.032e-002			
Viscosity (cP)	1.265e-002	1.265e-002			
Cv (Semi-Ideal) (kJ/kgmole-C)	29.43	29.43			
Mass Cv (Semi-Ideal) (kJ/kg-C)	1.297	1.297			
Cv (kJ/kgmole-C)	29.20	29.20			
Mass Cv (kJ/kg-C)	1.288	1.288			
Cv (Ent. Method) (kJ/kgmole-C)	---	---			
Mass Cv (Ent. Method) (kJ/kg-C)	---	---			
Cp/Cv (Ent. Method)	---	---			
Reid VP at 37.8 C (psig)	---	---			
True VP at 37.8 C (psig)	---	---			
Liq. Vol. Flow - Sum(Std. Cond) (barrel/day)	4.980e+005	4.980e+005			
HHV Molar Basis (Std) (Btu/SCF)	800.0	800.0			
HHV Mass Basis (Std) (kJ/kg)	3.113e+004	3.113e+004			
CO2 Loading	---	---			
CO2 App ML Con (kgmole/m3)	---	---			
CO2 App WT Con (kgmol/kg)	---	---			
Phase Fraction [Act. Vol. Basis]	1.000	1.000			
Mass Exergy (kJ/kg)	93.92	---			
Viscosity Index	-9.135	---			
Ideal Gas Cp/Cv	1.285	1.285			
Ideal Gas Cp (kJ/kgmole-C)	37.49	37.49			
Mass Ideal Gas Cp (kJ/kg-C)	1.653	1.653			
Bubble Point Pressure (psig)	---	---			

COMPOSITION

Overall Phase

Vapour Fraction 1.0000

COMPONENTS	MOLAR FLOW (kgmole/h)	MOLE FRACTION	MASS FLOW (tonne/d)	MASS FRACTION	LIQUID VOLUME FLOW (m3/h)	LIQUID VOLUME FRACTION
Methane	100.4480 *	0.7177 *	38.6754 *	0.5076 *	5.3825 *	0.7126 *
Ethane	5.2335 *	0.0374 *	3.7769 *	0.0496 *	0.4424 *	0.0586 *
Propane	0.3663 *	0.0026 *	0.3877 *	0.0051 *	0.0319 *	0.0042 *

* Specified by user.

Material Stream: permeate (continued)

Fluid Package: Basis-1
Property Package: Peng-Robinson

COMPOSITION

Overall Phase (continued)

Vapour Fraction 1.0000

COMPONENTS	MOLAR FLOW (kgmole/h)	MOLE FRACTION	MASS FLOW (tonne/d)	MASS FRACTION	LIQUID VOLUME FLOW (m3/h)	LIQUID VOLUME FRACTION
i-Butane	0.0209 *	0.0001 *	0.0292 *	0.0004 *	0.0022 *	0.0003 *
n-Butane	0.0209 *	0.0001 *	0.0292 *	0.0004 *	0.0021 *	0.0003 *
i-Pentane	0.0105 *	0.0001 *	0.0181 *	0.0002 *	0.0012 *	0.0002 *
n-Pentane	0.0000 *	0.0000 *	0.0000 *	0.0000 *	0.0000 *	0.0000 *
n-Hexane	0.2093 *	0.0015 *	0.4330 *	0.0057 *	0.0272 *	0.0036 *
Nitrogen	7.0412 *	0.0503 *	4.7339 *	0.0621 *	0.2446 *	0.0324 *
CO2	26.6072 *	0.1901 *	28.1034 *	0.3689 *	1.4188 *	0.1878 *
H2S	0.0000 *	0.0000 *	0.0000 *	0.0000 *	0.0000 *	0.0000 *
H2O	0.0000 *	0.0000 *	0.0000 *	0.0000 *	0.0000 *	0.0000 *
NBP[1]95*	0.0000 *	0.0000 *	0.0000 *	0.0000 *	0.0000 *	0.0000 *
NBP[1]121*	0.0000 *	0.0000 *	0.0000 *	0.0000 *	0.0000 *	0.0000 *
NBP[1]147*	0.0000 *	0.0000 *	0.0000 *	0.0000 *	0.0000 *	0.0000 *
NBP[1]171*	0.0000 *	0.0000 *	0.0000 *	0.0000 *	0.0000 *	0.0000 *
NBP[1]195*	0.0000 *	0.0000 *	0.0000 *	0.0000 *	0.0000 *	0.0000 *
NBP[1]222*	0.0000 *	0.0000 *	0.0000 *	0.0000 *	0.0000 *	0.0000 *
NBP[1]248*	0.0000 *	0.0000 *	0.0000 *	0.0000 *	0.0000 *	0.0000 *
NBP[1]273*	0.0000 *	0.0000 *	0.0000 *	0.0000 *	0.0000 *	0.0000 *
NBP[1]299*	0.0000 *	0.0000 *	0.0000 *	0.0000 *	0.0000 *	0.0000 *
NBP[1]325*	0.0000 *	0.0000 *	0.0000 *	0.0000 *	0.0000 *	0.0000 *
NBP[1]351*	0.0000 *	0.0000 *	0.0000 *	0.0000 *	0.0000 *	0.0000 *
NBP[1]377*	0.0000 *	0.0000 *	0.0000 *	0.0000 *	0.0000 *	0.0000 *
NBP[1]402*	0.0000 *	0.0000 *	0.0000 *	0.0000 *	0.0000 *	0.0000 *
NBP[1]428*	0.0000 *	0.0000 *	0.0000 *	0.0000 *	0.0000 *	0.0000 *
NBP[1]454*	0.0000 *	0.0000 *	0.0000 *	0.0000 *	0.0000 *	0.0000 *
NBP[1]480*	0.0000 *	0.0000 *	0.0000 *	0.0000 *	0.0000 *	0.0000 *
NBP[1]505*	0.0000 *	0.0000 *	0.0000 *	0.0000 *	0.0000 *	0.0000 *
NBP[1]531*	0.0000 *	0.0000 *	0.0000 *	0.0000 *	0.0000 *	0.0000 *
NBP[1]557*	0.0000 *	0.0000 *	0.0000 *	0.0000 *	0.0000 *	0.0000 *
NBP[1]582*	0.0000 *	0.0000 *	0.0000 *	0.0000 *	0.0000 *	0.0000 *
NBP[1]608*	0.0000 *	0.0000 *	0.0000 *	0.0000 *	0.0000 *	0.0000 *
NBP[1]634*	0.0000 *	0.0000 *	0.0000 *	0.0000 *	0.0000 *	0.0000 *
NBP[1]659*	0.0000 *	0.0000 *	0.0000 *	0.0000 *	0.0000 *	0.0000 *
NBP[1]685*	0.0000 *	0.0000 *	0.0000 *	0.0000 *	0.0000 *	0.0000 *
NBP[1]711*	0.0000 *	0.0000 *	0.0000 *	0.0000 *	0.0000 *	0.0000 *
NBP[1]736*	0.0000 *	0.0000 *	0.0000 *	0.0000 *	0.0000 *	0.0000 *
NBP[1]762*	0.0000 *	0.0000 *	0.0000 *	0.0000 *	0.0000 *	0.0000 *
NBP[1]788*	0.0000 *	0.0000 *	0.0000 *	0.0000 *	0.0000 *	0.0000 *
NBP[1]825*	0.0000 *	0.0000 *	0.0000 *	0.0000 *	0.0000 *	0.0000 *
NBP[1]873*	0.0000 *	0.0000 *	0.0000 *	0.0000 *	0.0000 *	0.0000 *
NBP[1]926*	0.0000 *	0.0000 *	0.0000 *	0.0000 *	0.0000 *	0.0000 *
NBP[1]978*	0.0000 *	0.0000 *	0.0000 *	0.0000 *	0.0000 *	0.0000 *
NBP[1]1021*	0.0000 *	0.0000 *	0.0000 *	0.0000 *	0.0000 *	0.0000 *
NBP[1]1075*	0.0000 *	0.0000 *	0.0000 *	0.0000 *	0.0000 *	0.0000 *
NBP[1]1123*	0.0000 *	0.0000 *	0.0000 *	0.0000 *	0.0000 *	0.0000 *
NBP[1]1173*	0.0000 *	0.0000 *	0.0000 *	0.0000 *	0.0000 *	0.0000 *
NBP[1]1250*	0.0000 *	0.0000 *	0.0000 *	0.0000 *	0.0000 *	0.0000 *
NBP[1]1339*	0.0000 *	0.0000 *	0.0000 *	0.0000 *	0.0000 *	0.0000 *
NBP[1]1432*	0.0000 *	0.0000 *	0.0000 *	0.0000 *	0.0000 *	0.0000 *
NBP[1]1528*	0.0000 *	0.0000 *	0.0000 *	0.0000 *	0.0000 *	0.0000 *
NBP[1]1637*	0.0000 *	0.0000 *	0.0000 *	0.0000 *	0.0000 *	0.0000 *
NBP[1]1732*	0.0000 *	0.0000 *	0.0000 *	0.0000 *	0.0000 *	0.0000 *
NBP[1]1819*	0.0000 *	0.0000 *	0.0000 *	0.0000 *	0.0000 *	0.0000 *
NBP[1]1913*	0.0000 *	0.0000 *	0.0000 *	0.0000 *	0.0000 *	0.0000 *
Total	139.9579	1.0000	76.1868	1.0000	7.5529	1.0000

Licensed to: PETROCHEMICAL ENGINEERIN
* Specified by user.

Material Stream: permeate (continued)

Fluid Package: Basis-1
Property Package: Peng-Robinson

COMPOSITION

Vapour Phase

Phase Fraction 1.000

COMPONENTS	MOLAR FLOW (kgmole/h)	MOLE FRACTION	MASS FLOW (tonne/d)	MASS FRACTION	LIQUID VOLUME FLOW (m3/h)	LIQUID VOLUME FRACTION
Methane	100.4480	0.7177	38.6754	0.5076	5.3825	0.7126
Ethane	5.2335	0.0374	3.7769	0.0496	0.4424	0.0586
Propane	0.3663	0.0026	0.3877	0.0051	0.0319	0.0042
i-Butane	0.0209	0.0001	0.0292	0.0004	0.0022	0.0003
n-Butane	0.0209	0.0001	0.0292	0.0004	0.0021	0.0003
i-Pentane	0.0105	0.0001	0.0181	0.0002	0.0012	0.0002
n-Pentane	0.0000	0.0000	0.0000	0.0000	0.0000	0.0000
n-Hexane	0.2093	0.0015	0.4330	0.0057	0.0272	0.0036
Nitrogen	7.0412	0.0503	4.7339	0.0621	0.2446	0.0324
CO2	26.6072	0.1901	28.1034	0.3689	1.4188	0.1878
H2S	0.0000	0.0000	0.0000	0.0000	0.0000	0.0000
H2O	0.0000	0.0000	0.0000	0.0000	0.0000	0.0000
NBP[1]95*	0.0000	0.0000	0.0000	0.0000	0.0000	0.0000
NBP[1]121*	0.0000	0.0000	0.0000	0.0000	0.0000	0.0000
NBP[1]147*	0.0000	0.0000	0.0000	0.0000	0.0000	0.0000
NBP[1]171*	0.0000	0.0000	0.0000	0.0000	0.0000	0.0000
NBP[1]195*	0.0000	0.0000	0.0000	0.0000	0.0000	0.0000
NBP[1]222*	0.0000	0.0000	0.0000	0.0000	0.0000	0.0000
NBP[1]248*	0.0000	0.0000	0.0000	0.0000	0.0000	0.0000
NBP[1]273*	0.0000	0.0000	0.0000	0.0000	0.0000	0.0000
NBP[1]299*	0.0000	0.0000	0.0000	0.0000	0.0000	0.0000
NBP[1]325*	0.0000	0.0000	0.0000	0.0000	0.0000	0.0000
NBP[1]351*	0.0000	0.0000	0.0000	0.0000	0.0000	0.0000
NBP[1]377*	0.0000	0.0000	0.0000	0.0000	0.0000	0.0000
NBP[1]402*	0.0000	0.0000	0.0000	0.0000	0.0000	0.0000
NBP[1]428*	0.0000	0.0000	0.0000	0.0000	0.0000	0.0000
NBP[1]454*	0.0000	0.0000	0.0000	0.0000	0.0000	0.0000
NBP[1]480*	0.0000	0.0000	0.0000	0.0000	0.0000	0.0000
NBP[1]505*	0.0000	0.0000	0.0000	0.0000	0.0000	0.0000
NBP[1]531*	0.0000	0.0000	0.0000	0.0000	0.0000	0.0000
NBP[1]557*	0.0000	0.0000	0.0000	0.0000	0.0000	0.0000
NBP[1]582*	0.0000	0.0000	0.0000	0.0000	0.0000	0.0000
NBP[1]608*	0.0000	0.0000	0.0000	0.0000	0.0000	0.0000
NBP[1]634*	0.0000	0.0000	0.0000	0.0000	0.0000	0.0000
NBP[1]659*	0.0000	0.0000	0.0000	0.0000	0.0000	0.0000
NBP[1]685*	0.0000	0.0000	0.0000	0.0000	0.0000	0.0000
NBP[1]711*	0.0000	0.0000	0.0000	0.0000	0.0000	0.0000
NBP[1]736*	0.0000	0.0000	0.0000	0.0000	0.0000	0.0000
NBP[1]762*	0.0000	0.0000	0.0000	0.0000	0.0000	0.0000
NBP[1]788*	0.0000	0.0000	0.0000	0.0000	0.0000	0.0000
NBP[1]825*	0.0000	0.0000	0.0000	0.0000	0.0000	0.0000
NBP[1]873*	0.0000	0.0000	0.0000	0.0000	0.0000	0.0000
NBP[1]926*	0.0000	0.0000	0.0000	0.0000	0.0000	0.0000
NBP[1]978*	0.0000	0.0000	0.0000	0.0000	0.0000	0.0000
NBP[1]1021*	0.0000	0.0000	0.0000	0.0000	0.0000	0.0000
NBP[1]1075*	0.0000	0.0000	0.0000	0.0000	0.0000	0.0000
NBP[1]1123*	0.0000	0.0000	0.0000	0.0000	0.0000	0.0000
NBP[1]1173*	0.0000	0.0000	0.0000	0.0000	0.0000	0.0000
NBP[1]1250*	0.0000	0.0000	0.0000	0.0000	0.0000	0.0000
NBP[1]1339*	0.0000	0.0000	0.0000	0.0000	0.0000	0.0000
NBP[1]1432*	0.0000	0.0000	0.0000	0.0000	0.0000	0.0000
NBP[1]1528*	0.0000	0.0000	0.0000	0.0000	0.0000	0.0000
NBP[1]1637*	0.0000	0.0000	0.0000	0.0000	0.0000	0.0000
NBP[1]1732*	0.0000	0.0000	0.0000	0.0000	0.0000	0.0000

* Specified by user.

Material Stream: permeate (continued)

Fluid Package: Basis-1
Property Package: Peng-Robinson

COMPOSITION

Vapour Phase (continued)

Phase Fraction 1.000

COMPONENTS	MOLAR FLOW (kgmole/h)	MOLE FRACTION	MASS FLOW (tonne/d)	MASS FRACTION	LIQUID VOLUME FLOW (m3/h)	LIQUID VOLUME FRACTION
NBP[1]1819*	0.0000	0.0000	0.0000	0.0000	0.0000	0.0000
NBP[1]1913*	0.0000	0.0000	0.0000	0.0000	0.0000	0.0000
Total	139.9579	1.0000	76.1868	1.0000	7.5529	1.0000

Material Stream: Sep gas

Fluid Package: Basis-1
Property Package: Peng-Robinson

CONDITIONS

		Overall	Vapour Phase	Liquid Phase	Aqueous Phase
Vapour / Phase Fraction		0.9999	0.9999	0.0001	0.0000
Temperature:	(F)	96.39	96.39	96.39	96.39
Pressure:	(psig)	640.0	640.0	640.0	640.0
Molar Flow	(MMSCFD)	5.351	5.350	6.380e-004	0.0000
Mass Flow	(tonne/d)	137.1	136.5	0.5633	0.0000
Std Ideal Liq Vol Flow	(barrel/day)	2390	2387	3.365	0.0000
Molar Enthalpy	(kJ/kgmole)	-8.942e+004	-8.924e+004	-1.595e+006	-2.854e+005
Molar Entropy	(kJ/kgmole-C)	156.5	156.4	1741	56.45
Heat Flow	(MMBtu/hr)	-22.59	-22.54	-4.803e-002	0.0000
Liq Vol Flow @Std Cond	(barrel/day)	9.475e+005 *	9.474e+005	3.525	0.0000

PROPERTIES

		Overall	Vapour Phase	Liquid Phase	Aqueous Phase
Molecular Weight		21.43	21.34	738.6	18.03
Molar Density	(kgmole/m3)	2.033	2.033	1.344	46.81
Mass Density	(kg/m3)	43.56	43.39	992.7	843.9
Act. Volume Flow	(barrel/day)	1.979e+004	1.979e+004	3.569	0.0000
Mass Enthalpy	(kJ/kg)	-4173	-4181	-2159	-1.583e+004
Mass Entropy	(kJ/kg-C)	7.305	7.325	2.358	3.131
Heat Capacity	(kJ/kgmole-C)	50.02	49.85	1441	77.63
Mass Heat Capacity	(kJ/kg-C)	2.334	2.336	1.951	4.306
LHV Molar Basis (Std)	(Btu/SCF)	---	---	---	3.328e-004
LHV Mass Basis (Std)	(kJ/kg)	---	---	---	1.629e-002
Phase Fraction [Vol. Basis]		0.9986	0.9986	1.407e-003	---
Phase Fraction [Mass Basis]		0.9959	0.9959	4.110e-003	0.0000
Partial Pressure of CO2	(psig)	7.525	---	---	---
Cost Based on Flow	(Cost/s)	0.0000	0.0000	0.0000	0.0000
Act. Gas Flow	(ACT_m3/h)	131.1	131.1	---	---
Avg. Liq. Density	(kgmole/m3)	16.83	16.85	1.426	55.35
Specific Heat	(kJ/kgmole-C)	50.02	49.85	1441	77.63
Std. Gas Flow	(STD_m3/h)	6302	6301	0.7514	0.0000
Std. Ideal Liq. Mass Density	(kg/m3)	360.7	359.7	1053	997.7
Act. Liq. Flow	(barrel/day)	3.569	---	3.569	0.0000
Z Factor		---	0.8645	1.308	3.754e-002
Watson K		17.25	17.29	11.74	8.495
User Property		---	---	---	---
Partial Pressure of H2S	(psig)	-14.69	---	---	---
Cp/(Cp - R)		1.199	1.200	1.006	1.120
Cp/Cv		1.442	1.444	1.006	1.153
Heat of Vap.	(kJ/kgmole)	1.800e+004	---	---	---
Kinematic Viscosity	(cSt)	---	0.2980	1.041e+004	0.8383
Liq. Mass Density (Std. Cond)	(kg/m3)	0.9099	0.9063	1005	1015
Liq. Vol. Flow (Std. Cond)	(barrel/day)	9.475e+005	9.474e+005	3.525	0.0000
Liquid Fraction		1.192e-004	0.0000	1.000	1.000
Molar Volume	(m3/kgmole)	0.4919	0.4919	0.7441	2.136e-002

* Specified by user.

Material Stream: Sep gas (continued)

Fluid Package: Basis-1
Property Package: Peng-Robinson

PROPERTIES

		Overall	Vapour Phase	Liquid Phase	Aqueous Phase
Mass Heat of Vap.	(kJ/kg)	839.8	---	---	---
Phase Fraction [Molar Basis]		0.9999	0.9999	0.0001	0.0000
Surface Tension	(dyne/cm)	16.04	---	16.04	70.20
Thermal Conductivity	(W/m-K)	---	3.528e-002	0.1207	0.6261
Viscosity	(cP)	---	1.293e-002	1.033e+004	0.7074
Cv (Semi-Ideal)	(kJ/kgmole-C)	41.70	41.54	1433	69.31
Mass Cv (Semi-Ideal)	(kJ/kg-C)	1.946	1.946	1.940	3.845
Cv	(kJ/kgmole-C)	34.68	34.51	1433	67.35
Mass Cv	(kJ/kg-C)	1.618	1.617	1.940	3.736
Cv (Ent. Method)	(kJ/kgmole-C)	---	---	---	---
Mass Cv (Ent. Method)	(kJ/kg-C)	---	---	---	---
Cp/Cv (Ent. Method)		---	---	---	---
Reid VP at 37.8 C	(psig)	---	---	27.20	---
True VP at 37.8 C	(psig)	3720	---	644.6	33.47
Liq. Vol. Flow - Sum(Std. Cond)	(barrel/day)	9.474e+005	9.474e+005	3.525	0.0000
HHV Molar Basis (Std)	(Btu/SCF)	---	---	---	46.44
HHV Mass Basis (Std)	(kJ/kg)	---	---	---	2274
CO2 Loading		---	---	---	---
CO2 App ML Con	(kgmole/m3)	---	---	2.656e-002	---
CO2 App WT Con	(kgmol/kg)	---	---	2.675e-005	---
Phase Fraction [Act. Vol. Basis]		0.9998	0.9998	1.804e-004	0.0000
Mass Exergy	(kJ/kg)	422.0	---	---	---
Viscosity Index		---	---	---	---
Ideal Gas Cp/Cv		1.245	1.246	1.007	1.328
Ideal Gas Cp	(kJ/kgmole-C)	42.19	42.05	1195	33.64
Mass Ideal Gas Cp	(kJ/kg-C)	1.969	1.970	1.618	1.866
Bubble Point Pressure	(psig)	3687	---	---	---

COMPOSITION

Overall Phase

Vapour Fraction 0.9999

COMPONENTS	MOLAR FLOW (kgmole/h)	MOLE FRACTION	MASS FLOW (tonne/d)	MASS FRACTION	LIQUID VOLUME FLOW (m3/h)	LIQUID VOLUME FRACTION
Methane	204.1046	0.7658	78.5863	0.5733	10.9369	0.6906
Ethane	27.3317	0.1025	19.7247	0.1439	2.3107	0.1459
Propane	13.3317	0.0500	14.1093	0.1029	1.1603	0.0733
i-Butane	1.5565	0.0058	2.1713	0.0158	0.1610	0.0102
n-Butane	2.8330	0.0106	3.9519	0.0288	0.2823	0.0178
i-Pentane	0.4661	0.0017	0.8072	0.0059	0.0539	0.0034
n-Pentane	0.4731	0.0018	0.8192	0.0060	0.0542	0.0034
n-Hexane	0.4062	0.0015	0.8401	0.0061	0.0528	0.0033
Nitrogen	5.5625	0.0209	3.7397	0.0273	0.1932	0.0122
CO2	9.0456	0.0339	9.5543	0.0697	0.4823	0.0305
H2S	0.0005	0.0000	0.0004	0.0000	0.0000	0.0000
H2O	0.4138	0.0016	0.1789	0.0013	0.0075	0.0005
NBP[1]95*	0.1440	0.0005	0.2347	0.0017	0.0144	0.0009
NBP[1]121*	0.1367	0.0005	0.2389	0.0017	0.0145	0.0009
NBP[1]147*	0.1344	0.0005	0.2588	0.0019	0.0154	0.0010
NBP[1]171*	0.1929	0.0007	0.4059	0.0030	0.0238	0.0015
NBP[1]195*	0.1835	0.0007	0.4121	0.0030	0.0238	0.0015
NBP[1]222*	0.0900	0.0003	0.2174	0.0016	0.0124	0.0008
NBP[1]248*	0.0487	0.0002	0.1265	0.0009	0.0071	0.0005
NBP[1]273*	0.0249	0.0001	0.0691	0.0005	0.0039	0.0002
NBP[1]299*	0.0120	0.0000	0.0356	0.0003	0.0020	0.0001
NBP[1]325*	0.0052	0.0000	0.0163	0.0001	0.0009	0.0001
NBP[1]351*	0.0024	0.0000	0.0081	0.0001	0.0004	0.0000
NBP[1]377*	0.0012	0.0000	0.0044	0.0000	0.0002	0.0000

* Specified by user.

Material Stream: Sep gas (continued)

Fluid Package: Basis-1
Property Package: Peng-Robinson

COMPOSITION

Overall Phase (continued)

Vapour Fraction 0.9999

COMPONENTS	MOLAR FLOW (kgmole/h)	MOLE FRACTION	MASS FLOW (tonne/d)	MASS FRACTION	LIQUID VOLUME FLOW (m3/h)	LIQUID VOLUME FRACTION
NBP[1]402*	0.0006	0.0000	0.0024	0.0000	0.0001	0.0000
NBP[1]428*	0.0003	0.0000	0.0013	0.0000	0.0001	0.0000
NBP[1]454*	0.0002	0.0000	0.0007	0.0000	0.0000	0.0000
NBP[1]480*	0.0001	0.0000	0.0004	0.0000	0.0000	0.0000
NBP[1]505*	0.0000	0.0000	0.0002	0.0000	0.0000	0.0000
NBP[1]531*	0.0000	0.0000	0.0001	0.0000	0.0000	0.0000
NBP[1]557*	0.0000	0.0000	0.0001	0.0000	0.0000	0.0000
NBP[1]582*	0.0000	0.0000	0.0000	0.0000	0.0000	0.0000
NBP[1]608*	0.0000	0.0000	0.0000	0.0000	0.0000	0.0000
NBP[1]634*	0.0000	0.0000	0.0000	0.0000	0.0000	0.0000
NBP[1]659*	0.0000	0.0000	0.0000	0.0000	0.0000	0.0000
NBP[1]685*	0.0000	0.0000	0.0000	0.0000	0.0000	0.0000
NBP[1]711*	0.0000	0.0000	0.0000	0.0000	0.0000	0.0000
NBP[1]736*	0.0000	0.0000	0.0000	0.0000	0.0000	0.0000
NBP[1]762*	0.0000	0.0000	0.0000	0.0000	0.0000	0.0000
NBP[1]788*	0.0000	0.0000	0.0000	0.0000	0.0000	0.0000
NBP[1]825*	0.0000	0.0000	0.0000	0.0000	0.0000	0.0000
NBP[1]873*	0.0000	0.0000	0.0000	0.0000	0.0000	0.0000
NBP[1]926*	0.0000	0.0000	0.0000	0.0000	0.0000	0.0000
NBP[1]978*	0.0000	0.0000	0.0000	0.0000	0.0000	0.0000
NBP[1]1021*	0.0000	0.0000	0.0000	0.0000	0.0000	0.0000
NBP[1]1075*	0.0000	0.0000	0.0000	0.0000	0.0000	0.0000
NBP[1]1123*	0.0000	0.0000	0.0000	0.0000	0.0000	0.0000
NBP[1]1173*	0.0000	0.0000	0.0000	0.0000	0.0000	0.0000
NBP[1]1250*	0.0000	0.0000	0.0000	0.0000	0.0000	0.0000
NBP[1]1339*	0.0000	0.0000	0.0000	0.0000	0.0000	0.0000
NBP[1]1432*	0.0000	0.0000	0.0000	0.0000	0.0000	0.0000
NBP[1]1528*	0.0000	0.0000	0.0000	0.0000	0.0000	0.0000
NBP[1]1637*	0.0000	0.0000	0.0000	0.0000	0.0000	0.0000
NBP[1]1732*	0.0000	0.0000	0.0000	0.0000	0.0000	0.0000
NBP[1]1819*	0.0090	0.0000	0.2396	0.0017	0.0094	0.0006
NBP[1]1913*	0.0112	0.0000	0.3148	0.0023	0.0121	0.0008
Total	266.5227	1.0000	137.0708	1.0000	15.8357	1.0000

Vapour Phase

Phase Fraction 0.9999

COMPONENTS	MOLAR FLOW (kgmole/h)	MOLE FRACTION	MASS FLOW (tonne/d)	MASS FRACTION	LIQUID VOLUME FLOW (m3/h)	LIQUID VOLUME FRACTION
Methane	204.0984	0.7659	78.5839	0.5757	10.9365	0.6916
Ethane	27.3302	0.1026	19.7236	0.1445	2.3105	0.1461
Propane	13.3305	0.0500	14.1080	0.1033	1.1602	0.0734
i-Butane	1.5563	0.0058	2.1710	0.0159	0.1610	0.0102
n-Butane	2.8325	0.0106	3.9513	0.0289	0.2823	0.0179
i-Pentane	0.4660	0.0017	0.8070	0.0059	0.0539	0.0034
n-Pentane	0.4730	0.0018	0.8190	0.0060	0.0542	0.0034
n-Hexane	0.4060	0.0015	0.8397	0.0062	0.0528	0.0033
Nitrogen	5.5624	0.0209	3.7396	0.0274	0.1932	0.0122
CO2	9.0450	0.0339	9.5536	0.0700	0.4823	0.0305
H2S	0.0005	0.0000	0.0004	0.0000	0.0000	0.0000
H2O	0.4137	0.0016	0.1789	0.0013	0.0075	0.0005
NBP[1]95*	0.1439	0.0005	0.2346	0.0017	0.0144	0.0009
NBP[1]121*	0.1366	0.0005	0.2389	0.0017	0.0144	0.0009
NBP[1]147*	0.1344	0.0005	0.2586	0.0019	0.0154	0.0010
NBP[1]171*	0.1928	0.0007	0.4057	0.0030	0.0237	0.0015
NBP[1]195*	0.1834	0.0007	0.4118	0.0030	0.0238	0.0015

* Specified by user.

Material Stream: Sep gas (continued)

Fluid Package: Basis-1
Property Package: Peng-Robinson

COMPOSITION

Vapour Phase (continued)

Phase Fraction 0.9999

COMPONENTS	MOLAR FLOW (kgmole/h)	MOLE FRACTION	MASS FLOW (tonne/d)	MASS FRACTION	LIQUID VOLUME FLOW (m3/h)	LIQUID VOLUME FRACTION
NBP[1]222*	0.0899	0.0003	0.2172	0.0016	0.0124	0.0008
NBP[1]248*	0.0487	0.0002	0.1264	0.0009	0.0071	0.0005
NBP[1]273*	0.0248	0.0001	0.0690	0.0005	0.0039	0.0002
NBP[1]299*	0.0120	0.0000	0.0355	0.0003	0.0020	0.0001
NBP[1]325*	0.0052	0.0000	0.0162	0.0001	0.0009	0.0001
NBP[1]351*	0.0024	0.0000	0.0081	0.0001	0.0004	0.0000
NBP[1]377*	0.0012	0.0000	0.0044	0.0000	0.0002	0.0000
NBP[1]402*	0.0006	0.0000	0.0024	0.0000	0.0001	0.0000
NBP[1]428*	0.0003	0.0000	0.0013	0.0000	0.0001	0.0000
NBP[1]454*	0.0002	0.0000	0.0007	0.0000	0.0000	0.0000
NBP[1]480*	0.0001	0.0000	0.0004	0.0000	0.0000	0.0000
NBP[1]505*	0.0000	0.0000	0.0002	0.0000	0.0000	0.0000
NBP[1]531*	0.0000	0.0000	0.0001	0.0000	0.0000	0.0000
NBP[1]557*	0.0000	0.0000	0.0000	0.0000	0.0000	0.0000
NBP[1]582*	0.0000	0.0000	0.0000	0.0000	0.0000	0.0000
NBP[1]608*	0.0000	0.0000	0.0000	0.0000	0.0000	0.0000
NBP[1]634*	0.0000	0.0000	0.0000	0.0000	0.0000	0.0000
NBP[1]659*	0.0000	0.0000	0.0000	0.0000	0.0000	0.0000
NBP[1]685*	0.0000	0.0000	0.0000	0.0000	0.0000	0.0000
NBP[1]711*	0.0000	0.0000	0.0000	0.0000	0.0000	0.0000
NBP[1]736*	0.0000	0.0000	0.0000	0.0000	0.0000	0.0000
NBP[1]762*	0.0000	0.0000	0.0000	0.0000	0.0000	0.0000
NBP[1]788*	0.0000	0.0000	0.0000	0.0000	0.0000	0.0000
NBP[1]825*	0.0000	0.0000	0.0000	0.0000	0.0000	0.0000
NBP[1]873*	0.0000	0.0000	0.0000	0.0000	0.0000	0.0000
NBP[1]926*	0.0000	0.0000	0.0000	0.0000	0.0000	0.0000
NBP[1]978*	0.0000	0.0000	0.0000	0.0000	0.0000	0.0000
NBP[1]1021*	0.0000	0.0000	0.0000	0.0000	0.0000	0.0000
NBP[1]1075*	0.0000	0.0000	0.0000	0.0000	0.0000	0.0000
NBP[1]1123*	0.0000	0.0000	0.0000	0.0000	0.0000	0.0000
NBP[1]1173*	0.0000	0.0000	0.0000	0.0000	0.0000	0.0000
NBP[1]1250*	0.0000	0.0000	0.0000	0.0000	0.0000	0.0000
NBP[1]1339*	0.0000	0.0000	0.0000	0.0000	0.0000	0.0000
NBP[1]1432*	0.0000	0.0000	0.0000	0.0000	0.0000	0.0000
NBP[1]1528*	0.0000	0.0000	0.0000	0.0000	0.0000	0.0000
NBP[1]1637*	0.0000	0.0000	0.0000	0.0000	0.0000	0.0000
NBP[1]1732*	0.0000	0.0000	0.0000	0.0000	0.0000	0.0000
NBP[1]1819*	0.0000	0.0000	0.0000	0.0000	0.0000	0.0000
NBP[1]1913*	0.0000	0.0000	0.0000	0.0000	0.0000	0.0000
Total	266.4909	1.0000	136.5074	1.0000	15.8134	1.0000

Liquid Phase

Phase Fraction 1.192e-004

COMPONENTS	MOLAR FLOW (kgmole/h)	MOLE FRACTION	MASS FLOW (tonne/d)	MASS FRACTION	LIQUID VOLUME FLOW (m3/h)	LIQUID VOLUME FRACTION
Methane	0.0062	0.1955	0.0024	0.0042	0.0003	0.0149
Ethane	0.0015	0.0480	0.0011	0.0020	0.0001	0.0058
Propane	0.0013	0.0394	0.0013	0.0024	0.0001	0.0049
i-Butane	0.0002	0.0072	0.0003	0.0006	0.0000	0.0011
n-Butane	0.0005	0.0145	0.0006	0.0011	0.0000	0.0021
i-Pentane	0.0001	0.0038	0.0002	0.0004	0.0000	0.0006
n-Pentane	0.0001	0.0042	0.0002	0.0004	0.0000	0.0007
n-Hexane	0.0002	0.0064	0.0004	0.0008	0.0000	0.0012
Nitrogen	0.0002	0.0048	0.0001	0.0002	0.0000	0.0002
CO2	0.0006	0.0198	0.0007	0.0012	0.0000	0.0015

* Specified by user.

Material Stream: Sep gas (continued)

Fluid Package: Basis-1
Property Package: Peng-Robinson

COMPOSITION

Liquid Phase (continued)

Phase Fraction 1.192e-004

COMPONENTS	MOLAR FLOW (kgmole/h)	MOLE FRACTION	MASS FLOW (tonne/d)	MASS FRACTION	LIQUID VOLUME FLOW (m3/h)	LIQUID VOLUME FRACTION
H2S	0.0000	0.0000	0.0000	0.0000	0.0000	0.0000
H2O	0.0000	0.0008	0.0000	0.0000	0.0000	0.0000
NBP[1]95*	0.0000	0.0012	0.0001	0.0001	0.0000	0.0002
NBP[1]121*	0.0000	0.0015	0.0001	0.0001	0.0000	0.0002
NBP[1]147*	0.0001	0.0018	0.0001	0.0002	0.0000	0.0003
NBP[1]171*	0.0001	0.0032	0.0002	0.0004	0.0000	0.0006
NBP[1]195*	0.0001	0.0039	0.0003	0.0005	0.0000	0.0007
NBP[1]222*	0.0001	0.0026	0.0002	0.0004	0.0000	0.0005
NBP[1]248*	0.0001	0.0019	0.0002	0.0003	0.0000	0.0004
NBP[1]273*	0.0000	0.0013	0.0001	0.0002	0.0000	0.0003
NBP[1]299*	0.0000	0.0009	0.0001	0.0001	0.0000	0.0002
NBP[1]325*	0.0000	0.0005	0.0001	0.0001	0.0000	0.0001
NBP[1]351*	0.0000	0.0004	0.0000	0.0001	0.0000	0.0001
NBP[1]377*	0.0000	0.0003	0.0000	0.0001	0.0000	0.0001
NBP[1]402*	0.0000	0.0002	0.0000	0.0000	0.0000	0.0001
NBP[1]428*	0.0000	0.0002	0.0000	0.0000	0.0000	0.0001
NBP[1]454*	0.0000	0.0001	0.0000	0.0000	0.0000	0.0000
NBP[1]480*	0.0000	0.0001	0.0000	0.0000	0.0000	0.0000
NBP[1]505*	0.0000	0.0001	0.0000	0.0000	0.0000	0.0000
NBP[1]531*	0.0000	0.0001	0.0000	0.0000	0.0000	0.0000
NBP[1]557*	0.0000	0.0000	0.0000	0.0000	0.0000	0.0000
NBP[1]582*	0.0000	0.0000	0.0000	0.0000	0.0000	0.0000
NBP[1]608*	0.0000	0.0000	0.0000	0.0000	0.0000	0.0000
NBP[1]634*	0.0000	0.0000	0.0000	0.0000	0.0000	0.0000
NBP[1]659*	0.0000	0.0000	0.0000	0.0000	0.0000	0.0000
NBP[1]685*	0.0000	0.0000	0.0000	0.0000	0.0000	0.0000
NBP[1]711*	0.0000	0.0000	0.0000	0.0000	0.0000	0.0000
NBP[1]736*	0.0000	0.0000	0.0000	0.0000	0.0000	0.0000
NBP[1]762*	0.0000	0.0000	0.0000	0.0000	0.0000	0.0000
NBP[1]788*	0.0000	0.0000	0.0000	0.0000	0.0000	0.0000
NBP[1]825*	0.0000	0.0000	0.0000	0.0000	0.0000	0.0000
NBP[1]873*	0.0000	0.0000	0.0000	0.0000	0.0000	0.0000
NBP[1]926*	0.0000	0.0000	0.0000	0.0000	0.0000	0.0000
NBP[1]978*	0.0000	0.0000	0.0000	0.0000	0.0000	0.0000
NBP[1]1021*	0.0000	0.0000	0.0000	0.0000	0.0000	0.0000
NBP[1]1075*	0.0000	0.0000	0.0000	0.0000	0.0000	0.0000
NBP[1]1123*	0.0000	0.0000	0.0000	0.0000	0.0000	0.0000
NBP[1]1173*	0.0000	0.0000	0.0000	0.0000	0.0000	0.0000
NBP[1]1250*	0.0000	0.0000	0.0000	0.0000	0.0000	0.0000
NBP[1]1339*	0.0000	0.0000	0.0000	0.0000	0.0000	0.0000
NBP[1]1432*	0.0000	0.0000	0.0000	0.0000	0.0000	0.0000
NBP[1]1528*	0.0000	0.0000	0.0000	0.0000	0.0000	0.0000
NBP[1]1637*	0.0000	0.0000	0.0000	0.0000	0.0000	0.0000
NBP[1]1732*	0.0000	0.0000	0.0000	0.0000	0.0000	0.0000
NBP[1]1819*	0.0090	0.2833	0.2396	0.4253	0.0094	0.4198
NBP[1]1913*	0.0112	0.3517	0.3148	0.5588	0.0121	0.5432
Total	0.0318	1.0000	0.5633	1.0000	0.0223	1.0000

Aqueous Phase

Phase Fraction 0.0000

COMPONENTS	MOLAR FLOW (kgmole/h)	MOLE FRACTION	MASS FLOW (tonne/d)	MASS FRACTION	LIQUID VOLUME FLOW (m3/h)	LIQUID VOLUME FRACTION
Methane	0.0000	0.0000	0.0000	0.0000	0.0000	0.0000
Ethane	0.0000	0.0000	0.0000	0.0000	0.0000	0.0000
Propane	0.0000	0.0000	0.0000	0.0000	0.0000	0.0000

* Specified by user.

Material Stream: Sep gas (continued)

Fluid Package: Basis-1
Property Package: Peng-Robinson

COMPOSITION

Aqueous Phase (continued)

Phase Fraction 0.0000

COMPONENTS	MOLAR FLOW (kgmole/h)	MOLE FRACTION	MASS FLOW (tonne/d)	MASS FRACTION	LIQUID VOLUME FLOW (m3/h)	LIQUID VOLUME FRACTION
i-Butane	0.0000	0.0000	0.0000	0.0000	0.0000	0.0000
n-Butane	0.0000	0.0000	0.0000	0.0000	0.0000	0.0000
i-Pentane	0.0000	0.0000	0.0000	0.0000	0.0000	0.0000
n-Pentane	0.0000	0.0000	0.0000	0.0000	0.0000	0.0000
n-Hexane	0.0000	0.0000	0.0000	0.0000	0.0000	0.0000
Nitrogen	0.0000	0.0000	0.0000	0.0000	0.0000	0.0000
CO2	0.0000	0.0005	0.0000	0.0011	0.0000	0.0014
H2S	0.0000	0.0000	0.0000	0.0000	0.0000	0.0000
H2O	0.0000	0.9995	0.0000	0.9988	0.0000	0.9986
NBP[1]95*	0.0000	0.0000	0.0000	0.0000	0.0000	0.0000
NBP[1]121*	0.0000	0.0000	0.0000	0.0000	0.0000	0.0000
NBP[1]147*	0.0000	0.0000	0.0000	0.0000	0.0000	0.0000
NBP[1]171*	0.0000	0.0000	0.0000	0.0000	0.0000	0.0000
NBP[1]195*	0.0000	0.0000	0.0000	0.0000	0.0000	0.0000
NBP[1]222*	0.0000	0.0000	0.0000	0.0000	0.0000	0.0000
NBP[1]248*	0.0000	0.0000	0.0000	0.0000	0.0000	0.0000
NBP[1]273*	0.0000	0.0000	0.0000	0.0000	0.0000	0.0000
NBP[1]299*	0.0000	0.0000	0.0000	0.0000	0.0000	0.0000
NBP[1]325*	0.0000	0.0000	0.0000	0.0000	0.0000	0.0000
NBP[1]351*	0.0000	0.0000	0.0000	0.0000	0.0000	0.0000
NBP[1]377*	0.0000	0.0000	0.0000	0.0000	0.0000	0.0000
NBP[1]402*	0.0000	0.0000	0.0000	0.0000	0.0000	0.0000
NBP[1]428*	0.0000	0.0000	0.0000	0.0000	0.0000	0.0000
NBP[1]454*	0.0000	0.0000	0.0000	0.0000	0.0000	0.0000
NBP[1]480*	0.0000	0.0000	0.0000	0.0000	0.0000	0.0000
NBP[1]505*	0.0000	0.0000	0.0000	0.0000	0.0000	0.0000
NBP[1]531*	0.0000	0.0000	0.0000	0.0000	0.0000	0.0000
NBP[1]557*	0.0000	0.0000	0.0000	0.0000	0.0000	0.0000
NBP[1]582*	0.0000	0.0000	0.0000	0.0000	0.0000	0.0000
NBP[1]608*	0.0000	0.0000	0.0000	0.0000	0.0000	0.0000
NBP[1]634*	0.0000	0.0000	0.0000	0.0000	0.0000	0.0000
NBP[1]659*	0.0000	0.0000	0.0000	0.0000	0.0000	0.0000
NBP[1]685*	0.0000	0.0000	0.0000	0.0000	0.0000	0.0000
NBP[1]711*	0.0000	0.0000	0.0000	0.0000	0.0000	0.0000
NBP[1]736*	0.0000	0.0000	0.0000	0.0000	0.0000	0.0000
NBP[1]762*	0.0000	0.0000	0.0000	0.0000	0.0000	0.0000
NBP[1]788*	0.0000	0.0000	0.0000	0.0000	0.0000	0.0000
NBP[1]825*	0.0000	0.0000	0.0000	0.0000	0.0000	0.0000
NBP[1]873*	0.0000	0.0000	0.0000	0.0000	0.0000	0.0000
NBP[1]926*	0.0000	0.0000	0.0000	0.0000	0.0000	0.0000
NBP[1]978*	0.0000	0.0000	0.0000	0.0000	0.0000	0.0000
NBP[1]1021*	0.0000	0.0000	0.0000	0.0000	0.0000	0.0000
NBP[1]1075*	0.0000	0.0000	0.0000	0.0000	0.0000	0.0000
NBP[1]1123*	0.0000	0.0000	0.0000	0.0000	0.0000	0.0000
NBP[1]1173*	0.0000	0.0000	0.0000	0.0000	0.0000	0.0000
NBP[1]1250*	0.0000	0.0000	0.0000	0.0000	0.0000	0.0000
NBP[1]1339*	0.0000	0.0000	0.0000	0.0000	0.0000	0.0000
NBP[1]1432*	0.0000	0.0000	0.0000	0.0000	0.0000	0.0000
NBP[1]1528*	0.0000	0.0000	0.0000	0.0000	0.0000	0.0000
NBP[1]1637*	0.0000	0.0000	0.0000	0.0000	0.0000	0.0000
NBP[1]1732*	0.0000	0.0000	0.0000	0.0000	0.0000	0.0000
NBP[1]1819*	0.0000	0.0000	0.0000	0.0000	0.0000	0.0000
NBP[1]1913*	0.0000	0.0000	0.0000	0.0000	0.0000	0.0000
Total	0.0000	1.0000	0.0000	1.0000	0.0000	1.0000

* Specified by user.

Material Stream: Water-PRD

Fluid Package: Basis-1
Property Package: Peng-Robinson

CONDITIONS

	Overall
Vapour / Phase Fraction	---
Temperature: (F)	---
Pressure: (psig)	450.0 *
Molar Flow (MMSCFD)	2.142
Mass Flow (tonne/d)	46.13
Std Ideal Liq Vol Flow (barrel/day)	290.7
Molar Enthalpy (kJ/kgmole)	---
Molar Entropy (kJ/kgmole-C)	---
Heat Flow (MMBtu/hr)	---
Liq Vol Flow @Std Cond (barrel/day)	285.9 *

PROPERTIES

	Overall
Molecular Weight	18.02
Molar Density (kgmole/m3)	---
Mass Density (kg/m3)	---
Act. Volume Flow (barrel/day)	---
Mass Enthalpy (kJ/kg)	---
Mass Entropy (kJ/kg-C)	---
Heat Capacity (kJ/kgmole-C)	---
Mass Heat Capacity (kJ/kg-C)	---
LHV Molar Basis (Std) (Btu/SCF)	0.0000
LHV Mass Basis (Std) (kJ/kg)	0.0000
Phase Fraction [Vol. Basis]	0.0000
Phase Fraction [Mass Basis]	0.0000
Partial Pressure of CO2 (psig)	-14.70
Cost Based on Flow (Cost/s)	0.0000
Act. Gas Flow (ACT_m3/h)	---
Avg. Liq. Density (kgmole/m3)	55.40
Specific Heat (kJ/kgmole-C)	---
Std. Gas Flow (STD_m3/h)	2523
Std. Ideal Liq. Mass Density (kg/m3)	998.0
Act. Liq. Flow (barrel/day)	---
Z Factor	---
Watson K	---
User Property	---
Partial Pressure of H2S (psig)	-14.70
Cp/(Cp - R)	---
Cp/Cv	---
Heat of Vap. (kJ/kgmole)	---
Kinematic Viscosity (cSt)	---
Liq. Mass Density (Std. Cond) (kg/m3)	1015
Liq. Vol. Flow (Std. Cond) (barrel/day)	285.9
Liquid Fraction	---
Molar Volume (m3/kgmole)	---
Mass Heat of Vap. (kJ/kg)	---
Phase Fraction [Molar Basis]	---
Surface Tension (dyne/cm)	---
Thermal Conductivity (W/m-K)	---
Viscosity (cP)	---
Cv (Semi-Ideal) (kJ/kgmole-C)	---
Mass Cv (Semi-Ideal) (kJ/kg-C)	---
Cv (kJ/kgmole-C)	---
Mass Cv (kJ/kg-C)	---
Cv (Ent. Method) (kJ/kgmole-C)	---
Mass Cv (Ent. Method) (kJ/kg-C)	---
Cp/Cv (Ent. Method)	---

* Specified by user.

Material Stream: Water-PRD (continued)

Fluid Package: Basis-1
Property Package: Peng-Robinson

PROPERTIES

		Overall				
Reid VP at 37.8 C	(psig)	---				
True VP at 37.8 C	(psig)	---				
Liq. Vol. Flow - Sum(Std. Cond)	(barrel/day)	0.0000				
HHV Molar Basis (Std)	(Btu/SCF)	46.46				
HHV Mass Basis (Std)	(kJ/kg)	2276				
CO2 Loading		---				
CO2 App ML Con	(kgmole/m3)	---				
CO2 App WT Con	(kgmol/kg)	0.0000				
Phase Fraction [Act. Vol. Basis]		0.0000				
Mass Exergy	(kJ/kg)	9.753e+006				
Viscosity Index		---				
Ideal Gas Cp/Cv		1.000				
Ideal Gas Cp	(kJ/kgmole-C)	1.170e+007				
Mass Ideal Gas Cp	(kJ/kg-C)	6.496e+005				
Bubble Point Pressure	(psig)	---				

COMPOSITION

Overall Phase

Vapour Fraction ---

COMPONENTS	MOLAR FLOW (kgmole/h)	MOLE FRACTION	MASS FLOW (tonne/d)	MASS FRACTION	LIQUID VOLUME FLOW (m3/h)	LIQUID VOLUME FRACTION
Methane	0.0000 *	0.0000 *	0.0000 *	0.0000 *	0.0000 *	0.0000 *
Ethane	0.0000 *	0.0000 *	0.0000 *	0.0000 *	0.0000 *	0.0000 *
Propane	0.0000 *	0.0000 *	0.0000 *	0.0000 *	0.0000 *	0.0000 *
i-Butane	0.0000 *	0.0000 *	0.0000 *	0.0000 *	0.0000 *	0.0000 *
n-Butane	0.0000 *	0.0000 *	0.0000 *	0.0000 *	0.0000 *	0.0000 *
i-Pentane	0.0000 *	0.0000 *	0.0000 *	0.0000 *	0.0000 *	0.0000 *
n-Pentane	0.0000 *	0.0000 *	0.0000 *	0.0000 *	0.0000 *	0.0000 *
n-Hexane	0.0000 *	0.0000 *	0.0000 *	0.0000 *	0.0000 *	0.0000 *
Nitrogen	0.0000 *	0.0000 *	0.0000 *	0.0000 *	0.0000 *	0.0000 *
CO2	0.0000 *	0.0000 *	0.0000 *	0.0000 *	0.0000 *	0.0000 *
H2S	0.0000 *	0.0000 *	0.0000 *	0.0000 *	0.0000 *	0.0000 *
H2O	106.6873 *	1.0000 *	46.1276 *	1.0000 *	1.9259 *	1.0000 *
NBP[1]95*	0.0000 *	0.0000 *	0.0000 *	0.0000 *	0.0000 *	0.0000 *
NBP[1]121*	0.0000 *	0.0000 *	0.0000 *	0.0000 *	0.0000 *	0.0000 *
NBP[1]147*	0.0000 *	0.0000 *	0.0000 *	0.0000 *	0.0000 *	0.0000 *
NBP[1]171*	0.0000 *	0.0000 *	0.0000 *	0.0000 *	0.0000 *	0.0000 *
NBP[1]195*	0.0000 *	0.0000 *	0.0000 *	0.0000 *	0.0000 *	0.0000 *
NBP[1]222*	0.0000 *	0.0000 *	0.0000 *	0.0000 *	0.0000 *	0.0000 *
NBP[1]248*	0.0000 *	0.0000 *	0.0000 *	0.0000 *	0.0000 *	0.0000 *
NBP[1]273*	0.0000 *	0.0000 *	0.0000 *	0.0000 *	0.0000 *	0.0000 *
NBP[1]299*	0.0000 *	0.0000 *	0.0000 *	0.0000 *	0.0000 *	0.0000 *
NBP[1]325*	0.0000 *	0.0000 *	0.0000 *	0.0000 *	0.0000 *	0.0000 *
NBP[1]351*	0.0000 *	0.0000 *	0.0000 *	0.0000 *	0.0000 *	0.0000 *
NBP[1]377*	0.0000 *	0.0000 *	0.0000 *	0.0000 *	0.0000 *	0.0000 *
NBP[1]402*	0.0000 *	0.0000 *	0.0000 *	0.0000 *	0.0000 *	0.0000 *
NBP[1]428*	0.0000 *	0.0000 *	0.0000 *	0.0000 *	0.0000 *	0.0000 *
NBP[1]454*	0.0000 *	0.0000 *	0.0000 *	0.0000 *	0.0000 *	0.0000 *
NBP[1]480*	0.0000 *	0.0000 *	0.0000 *	0.0000 *	0.0000 *	0.0000 *
NBP[1]505*	0.0000 *	0.0000 *	0.0000 *	0.0000 *	0.0000 *	0.0000 *
NBP[1]531*	0.0000 *	0.0000 *	0.0000 *	0.0000 *	0.0000 *	0.0000 *
NBP[1]557*	0.0000 *	0.0000 *	0.0000 *	0.0000 *	0.0000 *	0.0000 *
NBP[1]582*	0.0000 *	0.0000 *	0.0000 *	0.0000 *	0.0000 *	0.0000 *
NBP[1]608*	0.0000 *	0.0000 *	0.0000 *	0.0000 *	0.0000 *	0.0000 *
NBP[1]634*	0.0000 *	0.0000 *	0.0000 *	0.0000 *	0.0000 *	0.0000 *
NBP[1]659*	0.0000 *	0.0000 *	0.0000 *	0.0000 *	0.0000 *	0.0000 *
NBP[1]685*	0.0000 *	0.0000 *	0.0000 *	0.0000 *	0.0000 *	0.0000 *

Licensed to: PETROCHEMICAL ENGINEERIN
* Specified by user.

Material Stream: Water-PRD (continued)

Fluid Package: Basis-1
Property Package: Peng-Robinson

COMPOSITION

Overall Phase (continued)

Vapour Fraction ---

COMPONENTS	MOLAR FLOW (kgmole/h)	MOLE FRACTION	MASS FLOW (tonne/d)	MASS FRACTION	LIQUID VOLUME FLOW (m3/h)	LIQUID VOLUME FRACTION
NBP[1]711*	0.0000 *	0.0000 *	0.0000 *	0.0000 *	0.0000 *	0.0000 *
NBP[1]736*	0.0000 *	0.0000 *	0.0000 *	0.0000 *	0.0000 *	0.0000 *
NBP[1]762*	0.0000 *	0.0000 *	0.0000 *	0.0000 *	0.0000 *	0.0000 *
NBP[1]788*	0.0000 *	0.0000 *	0.0000 *	0.0000 *	0.0000 *	0.0000 *
NBP[1]825*	0.0000 *	0.0000 *	0.0000 *	0.0000 *	0.0000 *	0.0000 *
NBP[1]873*	0.0000 *	0.0000 *	0.0000 *	0.0000 *	0.0000 *	0.0000 *
NBP[1]926*	0.0000 *	0.0000 *	0.0000 *	0.0000 *	0.0000 *	0.0000 *
NBP[1]978*	0.0000 *	0.0000 *	0.0000 *	0.0000 *	0.0000 *	0.0000 *
NBP[1]1021*	0.0000 *	0.0000 *	0.0000 *	0.0000 *	0.0000 *	0.0000 *
NBP[1]1075*	0.0000 *	0.0000 *	0.0000 *	0.0000 *	0.0000 *	0.0000 *
NBP[1]1123*	0.0000 *	0.0000 *	0.0000 *	0.0000 *	0.0000 *	0.0000 *
NBP[1]1173*	0.0000 *	0.0000 *	0.0000 *	0.0000 *	0.0000 *	0.0000 *
NBP[1]1250*	0.0000 *	0.0000 *	0.0000 *	0.0000 *	0.0000 *	0.0000 *
NBP[1]1339*	0.0000 *	0.0000 *	0.0000 *	0.0000 *	0.0000 *	0.0000 *
NBP[1]1432*	0.0000 *	0.0000 *	0.0000 *	0.0000 *	0.0000 *	0.0000 *
NBP[1]1528*	0.0000 *	0.0000 *	0.0000 *	0.0000 *	0.0000 *	0.0000 *
NBP[1]1637*	0.0000 *	0.0000 *	0.0000 *	0.0000 *	0.0000 *	0.0000 *
NBP[1]1732*	0.0000 *	0.0000 *	0.0000 *	0.0000 *	0.0000 *	0.0000 *
NBP[1]1819*	0.0000 *	0.0000 *	0.0000 *	0.0000 *	0.0000 *	0.0000 *
NBP[1]1913*	0.0000 *	0.0000 *	0.0000 *	0.0000 *	0.0000 *	0.0000 *
Total	106.6873	1.0000	46.1276	1.0000	1.9259	1.0000

* Specified by user.

ANNEXURE-C

HP Separation @ 1240 psig with existing line heater

Case-2A

Pandhi		
Temperature	85.00	F
Pressure	450.0	psig
Molar Flow	7.874	MMSCFD
Phase - Molar Flow (Vapour Phase)	5.380	MMSCFD
Phase - Liq Vol Flow (Liquid Phase)	450.0	barrel/day
Phase - Liq Vol Flow (Aqueous Phase)	290.0	barrel/day

SPRDSHT-1-		
FEED LPG CONTENT	24.50	tonne/d

SPRDSHT-2		
SEPARATOR GAS LPG CONTENT	21.08	tonne/d

permeate		
Temperature	100.0	F
Pressure	20.00	psig
Molar Flow	2.810	MMSCFD
HHV Molar Basis (Std)	800.0	Btu/SCF

12		
Temperature	109.7	F
Pressure	20.00	psig
Molar Flow	0.1896	MMSCFD

8		
Temperature	135.0	F
Pressure	1240	psig
Molar Flow	7.874	MMSCFD

Q-100		
Heat Flow	0.5362	MMBtu/hr

SPRDSHT-13		
COMBINED GAS HHV	869.0	Btu/SCF

Pandhi-Cond.		
Actual Liquid Flow	442.7	barrel/day

SPRDSHT-3		
SEPARATOR CONDENSATE LPG CONTENT	3.418	tonne/d

SPRDSHT-4		
FLASH GAS LPG CONTENT	2.673	tonne/d

11		
Actual Liquid Flow	339.8	barrel/day

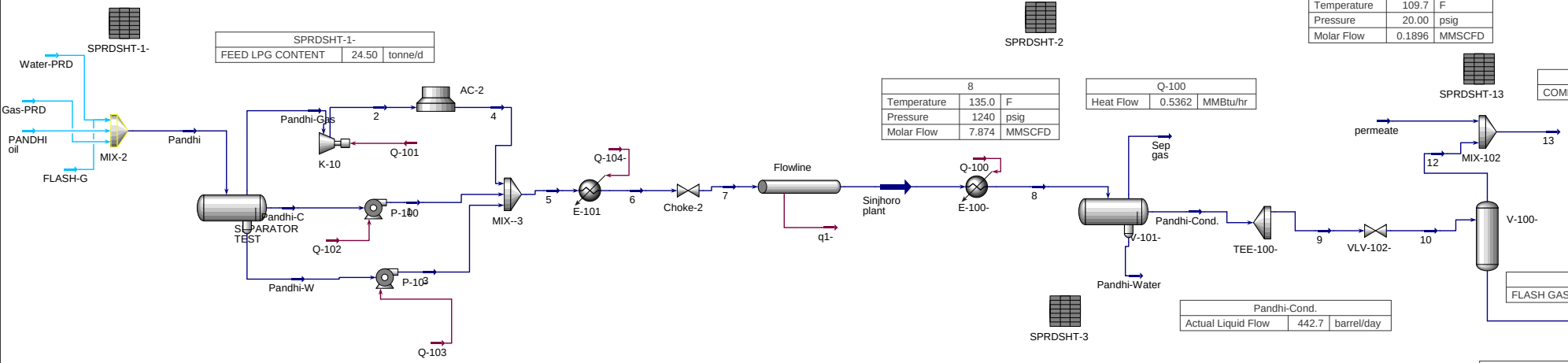

Petrochemical Engineering Consultants
Karachi, Pakistan

Case Name:	CASE-2A.hsc
Unit Set:	NewUser5e
Date/Time:	Fri Mar 20 18:20:59 2020

Material Stream: 1

Fluid Package: Basis-1
Property Package: Peng-Robinson

CONDITIONS

	Overall	Liquid Phase	Liquid Phase		
Vapour / Phase Fraction	0.0000	0.0170	0.9830		
Temperature: (F)	95.88	95.88	95.88		
Pressure: (psig)	2090 *	2090	2090		
Molar Flow (MMSCFD)	0.3574	6.079e-003	0.3513		
Mass Flow (tonne/d)	53.98	3.654	50.33		
Std Ideal Liq Vol Flow (barrel/day)	449.3	23.56	425.8		
Molar Enthalpy (kJ/kgmole)	-2.850e+005	-1.060e+006	-2.716e+005		
Molar Entropy (kJ/kgmole-C)	220.4	1098	205.3		
Heat Flow (MMBtu/hr)	-4.808	-0.3044	-4.504		
Liq Vol Flow @Std Cond (barrel/day)	434.3 *	23.73	410.6		

PROPERTIES

	Overall	Liquid Phase	Liquid Phase		
Molecular Weight	126.4	502.8	119.8		
Molar Density (kgmole/m3)	6.147	1.922	6.390		
Mass Density (kg/m3)	776.7	966.5	765.7		
Act. Volume Flow (barrel/day)	437.2	23.78	413.4		
Mass Enthalpy (kJ/kg)	-2255	-2109	-2266		
Mass Entropy (kJ/kg-C)	1.745	2.183	1.713		
Heat Capacity (kJ/kgmole-C)	255.7	961.1	243.5		
Mass Heat Capacity (kJ/kg-C)	2.024	1.911	2.032		
LHV Molar Basis (Std) (Btu/SCF)	---	---	---		
LHV Mass Basis (Std) (kJ/kg)	---	---	---		
Phase Fraction [Vol. Basis]	0.0000	5.243e-002	0.9476		
Phase Fraction [Mass Basis]	0.0000	6.769e-002	0.9323		
Partial Pressure of CO2 (psig)	-14.70	---	---		
Cost Based on Flow (Cost/s)	0.0000	0.0000	0.0000		
Act. Gas Flow (ACT_m3/h)	---	---	---		
Avg. Liq. Density (kgmole/m3)	5.980	1.940	6.204		
Specific Heat (kJ/kgmole-C)	255.7	961.1	243.5		
Std. Gas Flow (STD_m3/h)	420.9	7.159	413.7		
Std. Ideal Liq. Mass Density (kg/m3)	755.6	975.6	743.5		
Act. Liq. Flow (barrel/day)	437.2	23.78	413.4		
Z Factor	---	2.942	0.8850		
Watson K	11.99	11.67	12.06		
User Property	---	---	---		
Partial Pressure of H2S (psig)	-14.70	---	---		
Cp/(Cp - R)	1.034	1.009	1.035		
Cp/Cv	1.202	1.103	1.210		
Heat of Vap. (kJ/kgmole)	---	---	---		
Kinematic Viscosity (cSt)	1.244	537.4	1.048		
Liq. Mass Density (Std. Cond) (kg/m3)	781.8	968.5	771.0		
Liq. Vol. Flow (Std. Cond) (barrel/day)	434.3	23.73	410.6		
Liquid Fraction	1.000	1.000	1.000		
Molar Volume (m3/kgmole)	0.1627	0.5203	0.1565		
Mass Heat of Vap. (kJ/kg)	---	---	---		
Phase Fraction [Molar Basis]	0.0000	0.0170	0.9830		
Surface Tension (dyne/cm)	---	20.30	15.38		
Thermal Conductivity (W/m-K)	9.974e-002	0.1174	9.881e-002		
Viscosity (cP)	1.244	519.4	0.8029		
Cv (Semi-Ideal) (kJ/kgmole-C)	247.4	952.7	---		
Mass Cv (Semi-Ideal) (kJ/kg-C)	1.958	1.895	---		
Cv (kJ/kgmole-C)	212.7	871.2	---		
Mass Cv (kJ/kg-C)	1.683	1.733	---		
Cv (Ent. Method) (kJ/kgmole-C)	---	---	---		
Mass Cv (Ent. Method) (kJ/kg-C)	---	---	---		
Cp/Cv (Ent. Method)	---	---	---		

Licensed to: PETROCHEMICAL ENGINEERIN
* Specified by user.

Material Stream: 1 (continued)

Fluid Package: Basis-1
Property Package: Peng-Robinson

PROPERTIES

		Overall	Liquid Phase	Liquid Phase		
Reid VP at 37.8 C	(psig)	97.87	26.74	100.9		
True VP at 37.8 C	(psig)	475.9	449.8	497.6		
Liq. Vol. Flow - Sum(Std. Cond)	(barrel/day)	23.73	23.73	0.0000		
HHV Molar Basis (Std)	(Btu/SCF)	---	---	---		
HHV Mass Basis (Std)	(kJ/kg)	---	---	---		
CO2 Loading		---	---	---		
CO2 App ML Con	(kgmole/m3)	8.263e-002	2.756e-002	8.580e-002		
CO2 App WT Con	(kgmol/kg)	1.064e-004	2.851e-005	1.120e-004		
Phase Fraction [Act. Vol. Basis]		0.0000	5.440e-002	0.9456		
Mass Exergy	(kJ/kg)	35.50	---	---		
Viscosity Index		32.55	---	---		
Ideal Gas Cp/Cv		1.043	1.010	1.045		
Ideal Gas Cp	(kJ/kgmole-C)	203.6	802.7	193.3		
Mass Ideal Gas Cp	(kJ/kg-C)	1.612	1.596	1.613		
Bubble Point Pressure	(psig)	467.5	---	---		

COMPOSITION

Overall Phase

Vapour Fraction 0.0000

COMPONENTS	MOLAR FLOW (kgmole/h)	MOLE FRACTION	MASS FLOW (tonne/d)	MASS FRACTION	LIQUID VOLUME FLOW (m3/h)	LIQUID VOLUME FRACTION
Methane	2.0221	0.1136	0.7786	0.0144	0.1084	0.0364
Ethane	1.1465	0.0644	0.8274	0.0153	0.0969	0.0326
Propane	1.6775	0.0942	1.7753	0.0329	0.1460	0.0490
i-Butane	0.4420	0.0248	0.6166	0.0114	0.0457	0.0154
n-Butane	1.0672	0.0600	1.4887	0.0276	0.1064	0.0357
i-Pentane	0.3860	0.0217	0.6684	0.0124	0.0447	0.0150
n-Pentane	0.4950	0.0278	0.8571	0.0159	0.0567	0.0191
n-Hexane	1.1004	0.0618	2.2760	0.0422	0.1431	0.0481
Nitrogen	0.0228	0.0013	0.0153	0.0003	0.0008	0.0003
CO2	0.2393	0.0134	0.2527	0.0047	0.0128	0.0043
H2S	0.0000	0.0000	0.0000	0.0000	0.0000	0.0000
H2O	0.0107	0.0006	0.0046	0.0001	0.0002	0.0001
NBP[1]95*	0.1457	0.0082	0.2376	0.0044	0.0146	0.0049
NBP[1]121*	0.2063	0.0116	0.3606	0.0067	0.0218	0.0073
NBP[1]147*	0.3061	0.0172	0.5891	0.0109	0.0350	0.0118
NBP[1]171*	0.6492	0.0365	1.3660	0.0253	0.0800	0.0269
NBP[1]195*	0.9179	0.0516	2.0614	0.0382	0.1193	0.0401
NBP[1]222*	0.7271	0.0408	1.7563	0.0325	0.1004	0.0337
NBP[1]248*	0.6282	0.0353	1.6313	0.0302	0.0921	0.0309
NBP[1]273*	0.5177	0.0291	1.4378	0.0266	0.0803	0.0270
NBP[1]299*	0.4103	0.0230	1.2148	0.0225	0.0671	0.0225
NBP[1]325*	0.2995	0.0168	0.9422	0.0175	0.0515	0.0173
NBP[1]351*	0.2442	0.0137	0.8165	0.0151	0.0442	0.0148
NBP[1]377*	0.2240	0.0126	0.7989	0.0148	0.0428	0.0144
NBP[1]402*	0.2058	0.0116	0.7826	0.0145	0.0415	0.0139
NBP[1]428*	0.1959	0.0110	0.7949	0.0147	0.0417	0.0140
NBP[1]454*	0.1955	0.0110	0.8477	0.0157	0.0441	0.0148
NBP[1]480*	0.1981	0.0111	0.9180	0.0170	0.0473	0.0159
NBP[1]505*	0.1920	0.0108	0.9483	0.0176	0.0484	0.0162
NBP[1]531*	0.1852	0.0104	0.9740	0.0180	0.0492	0.0165
NBP[1]557*	0.1784	0.0100	0.9978	0.0185	0.0500	0.0168
NBP[1]582*	0.1706	0.0096	1.0132	0.0188	0.0503	0.0169
NBP[1]608*	0.1643	0.0092	1.0351	0.0192	0.0510	0.0171
NBP[1]634*	0.1611	0.0090	1.0753	0.0199	0.0526	0.0177
NBP[1]659*	0.1586	0.0089	1.1194	0.0207	0.0543	0.0182
NBP[1]685*	0.1641	0.0092	1.2227	0.0227	0.0588	0.0198

* Specified by user.

Material Stream: 1 (continued)

Fluid Package: Basis-1
Property Package: Peng-Robinson

COMPOSITION

Overall Phase (continued)

Vapour Fraction 0.0000

COMPONENTS	MOLAR FLOW (kgmole/h)	MOLE FRACTION	MASS FLOW (tonne/d)	MASS FRACTION	LIQUID VOLUME FLOW (m3/h)	LIQUID VOLUME FRACTION
NBP[1]711*	0.1715	0.0096	1.3445	0.0249	0.0642	0.0216
NBP[1]736*	0.1697	0.0095	1.3915	0.0258	0.0659	0.0221
NBP[1]762*	0.1653	0.0093	1.4214	0.0263	0.0669	0.0225
NBP[1]788*	0.1585	0.0089	1.4424	0.0267	0.0674	0.0226
NBP[1]825*	0.2655	0.0149	2.5963	0.0481	0.1201	0.0404
NBP[1]873*	0.1830	0.0103	1.9404	0.0359	0.0887	0.0298
NBP[1]926*	0.1437	0.0081	1.6472	0.0305	0.0744	0.0250
NBP[1]978*	0.1474	0.0083	1.8524	0.0343	0.0825	0.0277
NBP[1]1021*	0.0728	0.0041	0.9655	0.0179	0.0426	0.0143
NBP[1]1075*	0.0449	0.0025	0.6310	0.0117	0.0276	0.0093
NBP[1]1123*	0.0417	0.0023	0.6267	0.0116	0.0271	0.0091
NBP[1]1173*	0.0300	0.0017	0.4772	0.0088	0.0205	0.0069
NBP[1]1250*	0.0393	0.0022	0.6767	0.0125	0.0287	0.0096
NBP[1]1339*	0.0364	0.0020	0.6999	0.0130	0.0291	0.0098
NBP[1]1432*	0.0257	0.0014	0.5397	0.0100	0.0221	0.0074
NBP[1]1528*	0.0180	0.0010	0.4082	0.0076	0.0165	0.0055
NBP[1]1637*	0.0127	0.0007	0.3047	0.0056	0.0122	0.0041
NBP[1]1732*	0.0101	0.0006	0.2565	0.0048	0.0101	0.0034
NBP[1]1819*	0.0096	0.0005	0.2561	0.0047	0.0100	0.0034
NBP[1]1913*	0.0000	0.0000	0.0000	0.0000	0.0000	0.0000
Total	17.8012	1.0000	53.9808	1.0000	2.9766	1.0000

Liquid Phase

Phase Fraction 1.701e-002

COMPONENTS	MOLAR FLOW (kgmole/h)	MOLE FRACTION	MASS FLOW (tonne/d)	MASS FRACTION	LIQUID VOLUME FLOW (m3/h)	LIQUID VOLUME FRACTION
Methane	0.0348	0.1150	0.0134	0.0037	0.0019	0.0120
Ethane	0.0134	0.0442	0.0097	0.0026	0.0011	0.0073
Propane	0.0157	0.0517	0.0166	0.0045	0.0014	0.0087
i-Butane	0.0037	0.0124	0.0052	0.0014	0.0004	0.0025
n-Butane	0.0082	0.0271	0.0114	0.0031	0.0008	0.0052
i-Pentane	0.0027	0.0090	0.0047	0.0013	0.0003	0.0020
n-Pentane	0.0033	0.0108	0.0057	0.0015	0.0004	0.0024
n-Hexane	0.0064	0.0212	0.0133	0.0036	0.0008	0.0054
Nitrogen	0.0006	0.0021	0.0004	0.0001	0.0000	0.0001
CO2	0.0043	0.0143	0.0046	0.0013	0.0002	0.0015
H2S	0.0000	0.0000	0.0000	0.0000	0.0000	0.0000
H2O	0.0002	0.0006	0.0001	0.0000	0.0000	0.0000
NBP[1]95*	0.0009	0.0031	0.0015	0.0004	0.0001	0.0006
NBP[1]121*	0.0012	0.0041	0.0022	0.0006	0.0001	0.0008
NBP[1]147*	0.0017	0.0057	0.0033	0.0009	0.0002	0.0013
NBP[1]171*	0.0034	0.0113	0.0072	0.0020	0.0004	0.0027
NBP[1]195*	0.0046	0.0151	0.0103	0.0028	0.0006	0.0038
NBP[1]222*	0.0034	0.0114	0.0083	0.0023	0.0005	0.0030
NBP[1]248*	0.0028	0.0094	0.0074	0.0020	0.0004	0.0027
NBP[1]273*	0.0022	0.0074	0.0062	0.0017	0.0003	0.0022
NBP[1]299*	0.0017	0.0056	0.0050	0.0014	0.0003	0.0018
NBP[1]325*	0.0012	0.0040	0.0038	0.0010	0.0002	0.0013
NBP[1]351*	0.0009	0.0031	0.0032	0.0009	0.0002	0.0011
NBP[1]377*	0.0008	0.0028	0.0030	0.0008	0.0002	0.0010
NBP[1]402*	0.0007	0.0025	0.0028	0.0008	0.0002	0.0010
NBP[1]428*	0.0007	0.0023	0.0028	0.0008	0.0001	0.0009
NBP[1]454*	0.0007	0.0022	0.0029	0.0008	0.0002	0.0010
NBP[1]480*	0.0007	0.0022	0.0031	0.0008	0.0002	0.0010
NBP[1]505*	0.0006	0.0021	0.0031	0.0009	0.0002	0.0010

* Specified by user.

Material Stream: 1 (continued)

Fluid Package: Basis-1
Property Package: Peng-Robinson

COMPOSITION

Liquid Phase (continued)

Phase Fraction 1.701e-002

COMPONENTS	MOLAR FLOW (kgmole/h)	MOLE FRACTION	MASS FLOW (tonne/d)	MASS FRACTION	LIQUID VOLUME FLOW (m3/h)	LIQUID VOLUME FRACTION
NBP[1]531*	0.0006	0.0020	0.0032	0.0009	0.0002	0.0010
NBP[1]557*	0.0006	0.0019	0.0032	0.0009	0.0002	0.0010
NBP[1]582*	0.0006	0.0018	0.0033	0.0009	0.0002	0.0010
NBP[1]608*	0.0005	0.0018	0.0034	0.0009	0.0002	0.0011
NBP[1]634*	0.0005	0.0018	0.0036	0.0010	0.0002	0.0011
NBP[1]659*	0.0005	0.0018	0.0038	0.0010	0.0002	0.0012
NBP[1]685*	0.0006	0.0019	0.0043	0.0012	0.0002	0.0013
NBP[1]711*	0.0006	0.0020	0.0049	0.0013	0.0002	0.0015
NBP[1]736*	0.0006	0.0021	0.0053	0.0015	0.0003	0.0016
NBP[1]762*	0.0007	0.0022	0.0058	0.0016	0.0003	0.0018
NBP[1]788*	0.0007	0.0023	0.0065	0.0018	0.0003	0.0019
NBP[1]825*	0.0014	0.0046	0.0137	0.0037	0.0006	0.0041
NBP[1]873*	0.0013	0.0043	0.0137	0.0037	0.0006	0.0040
NBP[1]926*	0.0015	0.0051	0.0177	0.0048	0.0008	0.0051
NBP[1]978*	0.0024	0.0080	0.0303	0.0083	0.0014	0.0087
NBP[1]1021*	0.0021	0.0068	0.0273	0.0075	0.0012	0.0077
NBP[1]1075*	0.0030	0.0098	0.0418	0.0114	0.0018	0.0117
NBP[1]1123*	0.0060	0.0198	0.0902	0.0247	0.0039	0.0250
NBP[1]1173*	0.0108	0.0355	0.1711	0.0468	0.0073	0.0470
NBP[1]1250*	0.0337	0.1112	0.5795	0.1586	0.0246	0.1574
NBP[1]1339*	0.0361	0.1194	0.6954	0.1903	0.0290	0.1855
NBP[1]1432*	0.0257	0.0848	0.5397	0.1477	0.0221	0.1418
NBP[1]1528*	0.0180	0.0595	0.4082	0.1117	0.0165	0.1059
NBP[1]1637*	0.0127	0.0418	0.3047	0.0834	0.0122	0.0780
NBP[1]1732*	0.0101	0.0334	0.2565	0.0702	0.0101	0.0650
NBP[1]1819*	0.0096	0.0318	0.2561	0.0701	0.0100	0.0641
NBP[1]1913*	0.0000	0.0000	0.0000	0.0000	0.0000	0.0000
Total	0.3028	1.0000	3.6542	1.0000	0.1561	1.0000

Liquid Phase

Phase Fraction 0.9830

COMPONENTS	MOLAR FLOW (kgmole/h)	MOLE FRACTION	MASS FLOW (tonne/d)	MASS FRACTION	LIQUID VOLUME FLOW (m3/h)	LIQUID VOLUME FRACTION
Methane	1.9873	0.1136	0.7652	0.0152	0.1065	0.0378
Ethane	1.1332	0.0648	0.8178	0.0162	0.0958	0.0340
Propane	1.6618	0.0950	1.7588	0.0349	0.1446	0.0513
i-Butane	0.4383	0.0250	0.6114	0.0121	0.0453	0.0161
n-Butane	1.0590	0.0605	1.4773	0.0294	0.1055	0.0374
i-Pentane	0.3833	0.0219	0.6637	0.0132	0.0444	0.0157
n-Pentane	0.4917	0.0281	0.8515	0.0169	0.0563	0.0200
n-Hexane	1.0940	0.0625	2.2627	0.0450	0.1423	0.0504
Nitrogen	0.0222	0.0013	0.0149	0.0003	0.0008	0.0003
CO2	0.2349	0.0134	0.2482	0.0049	0.0125	0.0044
H2S	0.0000	0.0000	0.0000	0.0000	0.0000	0.0000
H2O	0.0105	0.0006	0.0045	0.0001	0.0002	0.0001
NBP[1]95*	0.1448	0.0083	0.2360	0.0047	0.0145	0.0051
NBP[1]121*	0.2050	0.0117	0.3585	0.0071	0.0217	0.0077
NBP[1]147*	0.3043	0.0174	0.5858	0.0116	0.0348	0.0123
NBP[1]171*	0.6458	0.0369	1.3588	0.0270	0.0795	0.0282
NBP[1]195*	0.9133	0.0522	2.0511	0.0408	0.1187	0.0421
NBP[1]222*	0.7237	0.0414	1.7480	0.0347	0.0999	0.0354
NBP[1]248*	0.6253	0.0357	1.6240	0.0323	0.0917	0.0325
NBP[1]273*	0.5155	0.0295	1.4316	0.0284	0.0799	0.0283
NBP[1]299*	0.4085	0.0233	1.2098	0.0240	0.0668	0.0237
NBP[1]325*	0.2983	0.0170	0.9385	0.0186	0.0513	0.0182

* Specified by user.

Material Stream: 1 (continued)

Fluid Package: Basis-1
Property Package: Peng-Robinson

COMPOSITION

Liquid Phase (continued)

Phase Fraction 0.9830

COMPONENTS	MOLAR FLOW (kgmole/h)	MOLE FRACTION	MASS FLOW (tonne/d)	MASS FRACTION	LIQUID VOLUME FLOW (m3/h)	LIQUID VOLUME FRACTION
NBP[1]351*	0.2432	0.0139	0.8133	0.0162	0.0440	0.0156
NBP[1]377*	0.2232	0.0128	0.7959	0.0158	0.0426	0.0151
NBP[1]402*	0.2050	0.0117	0.7797	0.0155	0.0414	0.0147
NBP[1]428*	0.1952	0.0112	0.7921	0.0157	0.0416	0.0147
NBP[1]454*	0.1948	0.0111	0.8447	0.0168	0.0439	0.0156
NBP[1]480*	0.1975	0.0113	0.9149	0.0182	0.0471	0.0167
NBP[1]505*	0.1913	0.0109	0.9451	0.0188	0.0482	0.0171
NBP[1]531*	0.1846	0.0106	0.9708	0.0193	0.0491	0.0174
NBP[1]557*	0.1778	0.0102	0.9946	0.0198	0.0498	0.0177
NBP[1]582*	0.1700	0.0097	1.0099	0.0201	0.0502	0.0178
NBP[1]608*	0.1637	0.0094	1.0317	0.0205	0.0508	0.0180
NBP[1]634*	0.1606	0.0092	1.0718	0.0213	0.0524	0.0186
NBP[1]659*	0.1581	0.0090	1.1156	0.0222	0.0541	0.0192
NBP[1]685*	0.1635	0.0093	1.2185	0.0242	0.0586	0.0208
NBP[1]711*	0.1709	0.0098	1.3396	0.0266	0.0639	0.0227
NBP[1]736*	0.1691	0.0097	1.3862	0.0275	0.0657	0.0233
NBP[1]762*	0.1646	0.0094	1.4156	0.0281	0.0666	0.0236
NBP[1]788*	0.1578	0.0090	1.4359	0.0285	0.0671	0.0238
NBP[1]825*	0.2641	0.0151	2.5826	0.0513	0.1195	0.0424
NBP[1]873*	0.1817	0.0104	1.9267	0.0383	0.0881	0.0312
NBP[1]926*	0.1422	0.0081	1.6295	0.0324	0.0736	0.0261
NBP[1]978*	0.1449	0.0083	1.8221	0.0362	0.0811	0.0288
NBP[1]1021*	0.0708	0.0040	0.9382	0.0186	0.0414	0.0147
NBP[1]1075*	0.0419	0.0024	0.5892	0.0117	0.0258	0.0091
NBP[1]1123*	0.0357	0.0020	0.5365	0.0107	0.0232	0.0082
NBP[1]1173*	0.0192	0.0011	0.3061	0.0061	0.0131	0.0047
NBP[1]1250*	0.0056	0.0003	0.0972	0.0019	0.0041	0.0015
NBP[1]1339*	0.0002	0.0000	0.0045	0.0001	0.0002	0.0001
NBP[1]1432*	0.0000	0.0000	0.0000	0.0000	0.0000	0.0000
NBP[1]1528*	0.0000	0.0000	0.0000	0.0000	0.0000	0.0000
NBP[1]1637*	0.0000	0.0000	0.0000	0.0000	0.0000	0.0000
NBP[1]1732*	0.0000	0.0000	0.0000	0.0000	0.0000	0.0000
NBP[1]1819*	0.0000	0.0000	0.0000	0.0000	0.0000	0.0000
NBP[1]1913*	0.0000	0.0000	0.0000	0.0000	0.0000	0.0000
Total	17.4984	1.0000	50.3266	1.0000	2.8205	1.0000

Material Stream: 2

Fluid Package: Basis-1
Property Package: Peng-Robinson

CONDITIONS

		Overall	Vapour Phase	Liquid Phase		
Vapour / Phase Fraction		0.9999	0.9999	0.0001		
Temperature:	(F)	329.4	329.4	329.4		
Pressure:	(psig)	2095 *	2095	2095		
Molar Flow	(MMSCFD)	5.381	5.381	5.240e-004		
Mass Flow	(tonne/d)	137.6	137.2	0.3260		
Std Ideal Liq Vol Flow	(barrel/day)	2403	2401	1.982		
Molar Enthalpy	(kJ/kgmole)	-8.389e+004	-8.380e+004	-9.628e+005		
Molar Entropy	(kJ/kgmole-C)	162.4	162.3	1655		
Heat Flow	(MMBtu/hr)	-21.31	-21.29	-2.382e-002		
Liq Vol Flow @Std Cond	(barrel/day)	9.528e+005 *	9.528e+005	2.085		

* Specified by user.

Material Stream: 2 (continued)

Fluid Package: Basis-1
Property Package: Peng-Robinson

PROPERTIES

	Overall	Vapour Phase	Liquid Phase
Molecular Weight	21.39	21.34	520.4
Molar Density (kgmole/m3)	4.261	4.261	1.702
Mass Density (kg/m3)	91.12	90.93	885.8
Act. Volume Flow (barrel/day)	9496	9493	2.315
Mass Enthalpy (kJ/kg)	-3923	-3928	-1850
Mass Entropy (kJ/kg-C)	7.595	7.606	3.180
Heat Capacity (kJ/kgmole-C)	59.17	59.05	1275
Mass Heat Capacity (kJ/kg-C)	2.767	2.768	2.450
LHV Molar Basis (Std) (Btu/SCF)	---	---	---
LHV Mass Basis (Std) (kJ/kg)	---	---	---
Phase Fraction [Vol. Basis]	0.9992	0.9992	8.248e-004
Phase Fraction [Mass Basis]	0.9976	0.9976	2.370e-003
Partial Pressure of CO2 (psig)	57.20	---	---
Cost Based on Flow (Cost/s)	0.0000	0.0000	0.0000
Act. Gas Flow (ACT_m3/h)	62.89	62.89	---
Avg. Liq. Density (kgmole/m3)	16.84	16.85	1.988
Specific Heat (kJ/kgmole-C)	59.17	59.05	1275
Std. Gas Flow (STD_m3/h)	6337	6337	0.6171
Std. Ideal Liq. Mass Density (kg/m3)	360.1	359.5	1034
Act. Liq. Flow (barrel/day)	2.315	---	2.315
Z Factor	---	0.9365	2.344
Watson K	17.28	17.29	11.39
User Property	---	---	---
Partial Pressure of H2S (psig)	-14.69	---	---
Cp/(Cp - R)	1.163	1.164	1.007
Cp/Cv	1.348	1.349	1.099
Heat of Vap. (kJ/kgmole)	1.606e+004	---	---
Kinematic Viscosity (cSt)	---	0.2123	19.72
Liq. Mass Density (Std. Cond) (kg/m3)	0.9081	0.9060	983.5
Liq. Vol. Flow (Std. Cond) (barrel/day)	9.528e+005	9.528e+005	2.085
Liquid Fraction	9.738e-005	0.0000	1.000
Molar Volume (m3/kgmole)	0.2347	0.2347	0.5875
Mass Heat of Vap. (kJ/kg)	751.0	---	---
Phase Fraction [Molar Basis]	0.9999	0.9999	0.0001
Surface Tension (dyne/cm)	8.567	---	8.567
Thermal Conductivity (W/m-K)	---	5.953e-002	8.973e-002
Viscosity (cP)	---	1.930e-002	17.47
Cv (Semi-Ideal) (kJ/kgmole-C)	50.86	50.74	1266
Mass Cv (Semi-Ideal) (kJ/kg-C)	2.378	2.378	2.434
Cv (kJ/kgmole-C)	43.89	43.77	1160
Mass Cv (kJ/kg-C)	2.052	2.051	2.230
Cv (Ent. Method) (kJ/kgmole-C)	43.91	43.79	1194
Mass Cv (Ent. Method) (kJ/kg-C)	2.053	2.052	2.295
Cp/Cv (Ent. Method)	1.348	1.349	1.068
Reid VP at 37.8 C (psig)	---	---	85.65
True VP at 37.8 C (psig)	3607	---	1991
Liq. Vol. Flow - Sum(Std. Cond) (barrel/day)	9.528e+005	9.528e+005	2.085
HHV Molar Basis (Std) (Btu/SCF)	---	---	---
HHV Mass Basis (Std) (kJ/kg)	---	---	---
CO2 Loading	---	---	---
CO2 App ML Con (kgmole/m3)	---	---	4.386e-002
CO2 App WT Con (kgmol/kg)	---	---	4.951e-005
Phase Fraction [Act. Vol. Basis]	0.9998	0.9998	2.438e-004
Mass Exergy (kJ/kg)	595.2	---	---
Viscosity Index	---	---	---
Ideal Gas Cp/Cv	1.195	1.196	1.007
Ideal Gas Cp (kJ/kgmole-C)	50.90	50.80	1127

* Specified by user.

Material Stream: 2 (continued)

Fluid Package: Basis-1
Property Package: Peng-Robinson

PROPERTIES

	Overall	Vapour Phase	Liquid Phase		
Mass Ideal Gas Cp (kJ/kg-C)	2.380	2.381	2.166		
Bubble Point Pressure (psig)	4369	---	---		

COMPOSITION

Overall Phase

Vapour Fraction 0.9999

COMPONENTS	MOLAR FLOW (kgmole/h)	MOLE FRACTION	MASS FLOW (tonne/d)	MASS FRACTION	LIQUID VOLUME FLOW (m3/h)	LIQUID VOLUME FRACTION
Methane	205.0219	0.7649	78.9395	0.5738	10.9860	0.6901
Ethane	27.6541	0.1032	19.9573	0.1451	2.3379	0.1469
Propane	13.5902	0.0507	14.3829	0.1046	1.1828	0.0743
i-Butane	1.5866	0.0059	2.2133	0.0161	0.1641	0.0103
n-Butane	2.8841	0.0108	4.0233	0.0292	0.2874	0.0181
i-Pentane	0.4635	0.0017	0.8025	0.0058	0.0536	0.0034
n-Pentane	0.4652	0.0017	0.8056	0.0059	0.0533	0.0033
n-Hexane	0.3694	0.0014	0.7639	0.0056	0.0480	0.0030
Nitrogen	5.5752	0.0208	3.7483	0.0272	0.1937	0.0122
CO2	9.1335	0.0341	9.6471	0.0701	0.4870	0.0306
H2S	0.0005	0.0000	0.0004	0.0000	0.0000	0.0000
H2O	0.3945	0.0015	0.1706	0.0012	0.0071	0.0004
NBP[1]95*	0.1425	0.0005	0.2323	0.0017	0.0142	0.0009
NBP[1]121*	0.1318	0.0005	0.2305	0.0017	0.0139	0.0009
NBP[1]147*	0.1254	0.0005	0.2414	0.0018	0.0144	0.0009
NBP[1]171*	0.1733	0.0006	0.3646	0.0027	0.0213	0.0013
NBP[1]195*	0.1579	0.0006	0.3546	0.0026	0.0205	0.0013
NBP[1]222*	0.0732	0.0003	0.1768	0.0013	0.0101	0.0006
NBP[1]248*	0.0375	0.0001	0.0974	0.0007	0.0055	0.0003
NBP[1]273*	0.0181	0.0001	0.0503	0.0004	0.0028	0.0002
NBP[1]299*	0.0083	0.0000	0.0245	0.0002	0.0014	0.0001
NBP[1]325*	0.0033	0.0000	0.0105	0.0001	0.0006	0.0000
NBP[1]351*	0.0015	0.0000	0.0050	0.0000	0.0003	0.0000
NBP[1]377*	0.0007	0.0000	0.0025	0.0000	0.0001	0.0000
NBP[1]402*	0.0003	0.0000	0.0013	0.0000	0.0001	0.0000
NBP[1]428*	0.0002	0.0000	0.0007	0.0000	0.0000	0.0000
NBP[1]454*	0.0001	0.0000	0.0003	0.0000	0.0000	0.0000
NBP[1]480*	0.0000	0.0000	0.0002	0.0000	0.0000	0.0000
NBP[1]505*	0.0000	0.0000	0.0001	0.0000	0.0000	0.0000
NBP[1]531*	0.0000	0.0000	0.0000	0.0000	0.0000	0.0000
NBP[1]557*	0.0000	0.0000	0.0000	0.0000	0.0000	0.0000
NBP[1]582*	0.0000	0.0000	0.0000	0.0000	0.0000	0.0000
NBP[1]608*	0.0000	0.0000	0.0000	0.0000	0.0000	0.0000
NBP[1]634*	0.0000	0.0000	0.0000	0.0000	0.0000	0.0000
NBP[1]659*	0.0000	0.0000	0.0000	0.0000	0.0000	0.0000
NBP[1]685*	0.0000	0.0000	0.0000	0.0000	0.0000	0.0000
NBP[1]711*	0.0000	0.0000	0.0000	0.0000	0.0000	0.0000
NBP[1]736*	0.0000	0.0000	0.0000	0.0000	0.0000	0.0000
NBP[1]762*	0.0000	0.0000	0.0000	0.0000	0.0000	0.0000
NBP[1]788*	0.0000	0.0000	0.0000	0.0000	0.0000	0.0000
NBP[1]825*	0.0000	0.0000	0.0000	0.0000	0.0000	0.0000
NBP[1]873*	0.0000	0.0000	0.0000	0.0000	0.0000	0.0000
NBP[1]926*	0.0000	0.0000	0.0000	0.0000	0.0000	0.0000
NBP[1]978*	0.0000	0.0000	0.0000	0.0000	0.0000	0.0000
NBP[1]1021*	0.0000	0.0000	0.0000	0.0000	0.0000	0.0000
NBP[1]1075*	0.0000	0.0000	0.0000	0.0000	0.0000	0.0000
NBP[1]1123*	0.0000	0.0000	0.0000	0.0000	0.0000	0.0000
NBP[1]1173*	0.0000	0.0000	0.0000	0.0000	0.0000	0.0000
NBP[1]1250*	0.0000	0.0000	0.0000	0.0000	0.0000	0.0000

* Specified by user.

Material Stream: 2 (continued)

Fluid Package: Basis-1
Property Package: Peng-Robinson

COMPOSITION

Overall Phase (continued)

Vapour Fraction 0.9999

COMPONENTS	MOLAR FLOW (kgmole/h)	MOLE FRACTION	MASS FLOW (tonne/d)	MASS FRACTION	LIQUID VOLUME FLOW (m3/h)	LIQUID VOLUME FRACTION
NBP[1]1339*	0.0000	0.0000	0.0000	0.0000	0.0000	0.0000
NBP[1]1432*	0.0000	0.0000	0.0000	0.0000	0.0000	0.0000
NBP[1]1528*	0.0000	0.0000	0.0000	0.0000	0.0000	0.0000
NBP[1]1637*	0.0000	0.0000	0.0000	0.0000	0.0000	0.0000
NBP[1]1732*	0.0000	0.0000	0.0000	0.0000	0.0000	0.0000
NBP[1]1819*	0.0001	0.0000	0.0029	0.0000	0.0001	0.0000
NBP[1]1913*	0.0112	0.0000	0.3148	0.0023	0.0121	0.0008
Total	268.0242	1.0000	137.5655	1.0000	15.9186	1.0000

Vapour Phase

Phase Fraction 0.9999

COMPONENTS	MOLAR FLOW (kgmole/h)	MOLE FRACTION	MASS FLOW (tonne/d)	MASS FRACTION	LIQUID VOLUME FLOW (m3/h)	LIQUID VOLUME FRACTION
Methane	205.0115	0.7650	78.9355	0.5752	10.9855	0.6907
Ethane	27.6523	0.1032	19.9561	0.1454	2.3378	0.1470
Propane	13.5892	0.0507	14.3819	0.1048	1.1827	0.0744
i-Butane	1.5865	0.0059	2.2131	0.0161	0.1641	0.0103
n-Butane	2.8838	0.0108	4.0229	0.0293	0.2874	0.0181
i-Pentane	0.4634	0.0017	0.8025	0.0058	0.0536	0.0034
n-Pentane	0.4652	0.0017	0.8055	0.0059	0.0533	0.0034
n-Hexane	0.3693	0.0014	0.7638	0.0056	0.0480	0.0030
Nitrogen	5.5749	0.0208	3.7481	0.0273	0.1937	0.0122
CO2	9.1329	0.0341	9.6464	0.0703	0.4870	0.0306
H2S	0.0005	0.0000	0.0004	0.0000	0.0000	0.0000
H2O	0.3944	0.0015	0.1705	0.0012	0.0071	0.0004
NBP[1]95*	0.1425	0.0005	0.2323	0.0017	0.0142	0.0009
NBP[1]121*	0.1318	0.0005	0.2305	0.0017	0.0139	0.0009
NBP[1]147*	0.1254	0.0005	0.2413	0.0018	0.0144	0.0009
NBP[1]171*	0.1732	0.0006	0.3645	0.0027	0.0213	0.0013
NBP[1]195*	0.1579	0.0006	0.3545	0.0026	0.0205	0.0013
NBP[1]222*	0.0732	0.0003	0.1768	0.0013	0.0101	0.0006
NBP[1]248*	0.0375	0.0001	0.0974	0.0007	0.0055	0.0003
NBP[1]273*	0.0181	0.0001	0.0503	0.0004	0.0028	0.0002
NBP[1]299*	0.0083	0.0000	0.0245	0.0002	0.0014	0.0001
NBP[1]325*	0.0033	0.0000	0.0105	0.0001	0.0006	0.0000
NBP[1]351*	0.0015	0.0000	0.0050	0.0000	0.0003	0.0000
NBP[1]377*	0.0007	0.0000	0.0025	0.0000	0.0001	0.0000
NBP[1]402*	0.0003	0.0000	0.0013	0.0000	0.0001	0.0000
NBP[1]428*	0.0002	0.0000	0.0007	0.0000	0.0000	0.0000
NBP[1]454*	0.0001	0.0000	0.0003	0.0000	0.0000	0.0000
NBP[1]480*	0.0000	0.0000	0.0002	0.0000	0.0000	0.0000
NBP[1]505*	0.0000	0.0000	0.0001	0.0000	0.0000	0.0000
NBP[1]531*	0.0000	0.0000	0.0000	0.0000	0.0000	0.0000
NBP[1]557*	0.0000	0.0000	0.0000	0.0000	0.0000	0.0000
NBP[1]582*	0.0000	0.0000	0.0000	0.0000	0.0000	0.0000
NBP[1]608*	0.0000	0.0000	0.0000	0.0000	0.0000	0.0000
NBP[1]634*	0.0000	0.0000	0.0000	0.0000	0.0000	0.0000
NBP[1]659*	0.0000	0.0000	0.0000	0.0000	0.0000	0.0000
NBP[1]685*	0.0000	0.0000	0.0000	0.0000	0.0000	0.0000
NBP[1]711*	0.0000	0.0000	0.0000	0.0000	0.0000	0.0000
NBP[1]736*	0.0000	0.0000	0.0000	0.0000	0.0000	0.0000
NBP[1]762*	0.0000	0.0000	0.0000	0.0000	0.0000	0.0000
NBP[1]788*	0.0000	0.0000	0.0000	0.0000	0.0000	0.0000
NBP[1]825*	0.0000	0.0000	0.0000	0.0000	0.0000	0.0000
NBP[1]873*	0.0000	0.0000	0.0000	0.0000	0.0000	0.0000

* Specified by user.

Material Stream: 2 (continued)

Fluid Package: Basis-1
Property Package: Peng-Robinson

COMPOSITION

Vapour Phase (continued)

Phase Fraction 0.9999

COMPONENTS	MOLAR FLOW (kgmole/h)	MOLE FRACTION	MASS FLOW (tonne/d)	MASS FRACTION	LIQUID VOLUME FLOW (m3/h)	LIQUID VOLUME FRACTION
NBP[1]926*	0.0000	0.0000	0.0000	0.0000	0.0000	0.0000
NBP[1]978*	0.0000	0.0000	0.0000	0.0000	0.0000	0.0000
NBP[1]1021*	0.0000	0.0000	0.0000	0.0000	0.0000	0.0000
NBP[1]1075*	0.0000	0.0000	0.0000	0.0000	0.0000	0.0000
NBP[1]1123*	0.0000	0.0000	0.0000	0.0000	0.0000	0.0000
NBP[1]1173*	0.0000	0.0000	0.0000	0.0000	0.0000	0.0000
NBP[1]1250*	0.0000	0.0000	0.0000	0.0000	0.0000	0.0000
NBP[1]1339*	0.0000	0.0000	0.0000	0.0000	0.0000	0.0000
NBP[1]1432*	0.0000	0.0000	0.0000	0.0000	0.0000	0.0000
NBP[1]1528*	0.0000	0.0000	0.0000	0.0000	0.0000	0.0000
NBP[1]1637*	0.0000	0.0000	0.0000	0.0000	0.0000	0.0000
NBP[1]1732*	0.0000	0.0000	0.0000	0.0000	0.0000	0.0000
NBP[1]1819*	0.0000	0.0000	0.0000	0.0000	0.0000	0.0000
NBP[1]1913*	0.0000	0.0000	0.0000	0.0000	0.0000	0.0000
Total	267.9981	1.0000	137.2395	1.0000	15.9054	1.0000

Liquid Phase

Phase Fraction 9.738e-005

COMPONENTS	MOLAR FLOW (kgmole/h)	MOLE FRACTION	MASS FLOW (tonne/d)	MASS FRACTION	LIQUID VOLUME FLOW (m3/h)	LIQUID VOLUME FRACTION
Methane	0.0104	0.3997	0.0040	0.0123	0.0006	0.0426
Ethane	0.0017	0.0659	0.0012	0.0038	0.0001	0.0111
Propane	0.0010	0.0387	0.0011	0.0033	0.0001	0.0067
i-Butane	0.0001	0.0053	0.0002	0.0006	0.0000	0.0011
n-Butane	0.0003	0.0100	0.0004	0.0011	0.0000	0.0020
i-Pentane	0.0000	0.0019	0.0001	0.0003	0.0000	0.0004
n-Pentane	0.0001	0.0020	0.0001	0.0003	0.0000	0.0004
n-Hexane	0.0000	0.0019	0.0001	0.0003	0.0000	0.0005
Nitrogen	0.0003	0.0108	0.0002	0.0006	0.0000	0.0007
CO2	0.0007	0.0258	0.0007	0.0022	0.0000	0.0027
H2S	0.0000	0.0000	0.0000	0.0000	0.0000	0.0000
H2O	0.0000	0.0011	0.0000	0.0000	0.0000	0.0000
NBP[1]95*	0.0000	0.0006	0.0000	0.0001	0.0000	0.0001
NBP[1]121*	0.0000	0.0006	0.0000	0.0001	0.0000	0.0001
NBP[1]147*	0.0000	0.0006	0.0000	0.0001	0.0000	0.0001
NBP[1]171*	0.0000	0.0009	0.0001	0.0002	0.0000	0.0002
NBP[1]195*	0.0000	0.0009	0.0001	0.0002	0.0000	0.0002
NBP[1]222*	0.0000	0.0005	0.0000	0.0001	0.0000	0.0001
NBP[1]248*	0.0000	0.0003	0.0000	0.0001	0.0000	0.0001
NBP[1]273*	0.0000	0.0001	0.0000	0.0000	0.0000	0.0000
NBP[1]299*	0.0000	0.0001	0.0000	0.0000	0.0000	0.0000
NBP[1]325*	0.0000	0.0000	0.0000	0.0000	0.0000	0.0000
NBP[1]351*	0.0000	0.0000	0.0000	0.0000	0.0000	0.0000
NBP[1]377*	0.0000	0.0000	0.0000	0.0000	0.0000	0.0000
NBP[1]402*	0.0000	0.0000	0.0000	0.0000	0.0000	0.0000
NBP[1]428*	0.0000	0.0000	0.0000	0.0000	0.0000	0.0000
NBP[1]454*	0.0000	0.0000	0.0000	0.0000	0.0000	0.0000
NBP[1]480*	0.0000	0.0000	0.0000	0.0000	0.0000	0.0000
NBP[1]505*	0.0000	0.0000	0.0000	0.0000	0.0000	0.0000
NBP[1]531*	0.0000	0.0000	0.0000	0.0000	0.0000	0.0000
NBP[1]557*	0.0000	0.0000	0.0000	0.0000	0.0000	0.0000
NBP[1]582*	0.0000	0.0000	0.0000	0.0000	0.0000	0.0000
NBP[1]608*	0.0000	0.0000	0.0000	0.0000	0.0000	0.0000
NBP[1]634*	0.0000	0.0000	0.0000	0.0000	0.0000	0.0000
NBP[1]659*	0.0000	0.0000	0.0000	0.0000	0.0000	0.0000

* Specified by user.

Material Stream: 2 (continued)

Fluid Package: Basis-1
Property Package: Peng-Robinson

COMPOSITION

Liquid Phase (continued)

Phase Fraction 9.738e-005

COMPONENTS	MOLAR FLOW (kgmole/h)	MOLE FRACTION	MASS FLOW (tonne/d)	MASS FRACTION	LIQUID VOLUME FLOW (m3/h)	LIQUID VOLUME FRACTION
NBP[1]685*	0.0000	0.0000	0.0000	0.0000	0.0000	0.0000
NBP[1]711*	0.0000	0.0000	0.0000	0.0000	0.0000	0.0000
NBP[1]736*	0.0000	0.0000	0.0000	0.0000	0.0000	0.0000
NBP[1]762*	0.0000	0.0000	0.0000	0.0000	0.0000	0.0000
NBP[1]788*	0.0000	0.0000	0.0000	0.0000	0.0000	0.0000
NBP[1]825*	0.0000	0.0000	0.0000	0.0000	0.0000	0.0000
NBP[1]873*	0.0000	0.0000	0.0000	0.0000	0.0000	0.0000
NBP[1]926*	0.0000	0.0000	0.0000	0.0000	0.0000	0.0000
NBP[1]978*	0.0000	0.0000	0.0000	0.0000	0.0000	0.0000
NBP[1]1021*	0.0000	0.0000	0.0000	0.0000	0.0000	0.0000
NBP[1]1075*	0.0000	0.0000	0.0000	0.0000	0.0000	0.0000
NBP[1]1123*	0.0000	0.0000	0.0000	0.0000	0.0000	0.0000
NBP[1]1173*	0.0000	0.0000	0.0000	0.0000	0.0000	0.0000
NBP[1]1250*	0.0000	0.0000	0.0000	0.0000	0.0000	0.0000
NBP[1]1339*	0.0000	0.0000	0.0000	0.0000	0.0000	0.0000
NBP[1]1432*	0.0000	0.0000	0.0000	0.0000	0.0000	0.0000
NBP[1]1528*	0.0000	0.0000	0.0000	0.0000	0.0000	0.0000
NBP[1]1637*	0.0000	0.0000	0.0000	0.0000	0.0000	0.0000
NBP[1]1732*	0.0000	0.0000	0.0000	0.0000	0.0000	0.0000
NBP[1]1819*	0.0001	0.0041	0.0029	0.0088	0.0001	0.0085
NBP[1]1913*	0.0112	0.4282	0.3148	0.9656	0.0121	0.9220
Total	0.0261	1.0000	0.3260	1.0000	0.0131	1.0000

Material Stream: 3

Fluid Package: Basis-1
Property Package: Peng-Robinson

CONDITIONS

		Overall	Aqueous Phase
Vapour / Phase Fraction		0.0000	1.0000
Temperature:	(F)	86.60	86.60
Pressure:	(psig)	2090 *	2090
Molar Flow	(MMSCFD)	2.135	2.135
Mass Flow	(tonne/d)	46.00	46.00
Std Ideal Liq Vol Flow	(barrel/day)	290.0	290.0
Molar Enthalpy	(kJ/kgmole)	-2.856e+005	-2.856e+005
Molar Entropy	(kJ/kgmole-C)	54.92	54.92
Heat Flow	(MMBtu/hr)	-28.79	-28.79
Liq Vol Flow @Std Cond	(barrel/day)	285.1 *	285.1

PROPERTIES

		Overall	Aqueous Phase
Molecular Weight		18.03	18.03
Molar Density	(kgmole/m3)	55.91	55.91
Mass Density	(kg/m3)	1008	1008
Act. Volume Flow	(barrel/day)	287.1	287.1
Mass Enthalpy	(kJ/kg)	-1.584e+004	-1.584e+004
Mass Entropy	(kJ/kg-C)	3.047	3.047
Heat Capacity	(kJ/kgmole-C)	77.42	77.42
Mass Heat Capacity	(kJ/kg-C)	4.295	4.295
LHV Molar Basis (Std)	(Btu/SCF)	1.809e-004	1.809e-004
LHV Mass Basis (Std)	(kJ/kg)	8.858e-003	8.858e-003
Phase Fraction [Vol. Basis]		0.0000	1.000
Phase Fraction [Mass Basis]		0.0000	1.000
Partial Pressure of CO2	(psig)	-14.70	---

* Specified by user.

Material Stream: 3 (continued)

Fluid Package: Basis-1
Property Package: Peng-Robinson

PROPERTIES

	Overall	Aqueous Phase
Cost Based on Flow (Cost/s)	0.0000	0.0000
Act. Gas Flow (ACT_m3/h)	---	---
Avg. Liq. Density (kgmole/m3)	55.35	55.35
Specific Heat (kJ/kgmole-C)	77.42	77.42
Std. Gas Flow (STD_m3/h)	2514	2514
Std. Ideal Liq. Mass Density (kg/m3)	997.8	997.8
Act. Liq. Flow (barrel/day)	287.1	287.1
Z Factor	0.1029	0.1029
Watson K	8.497	8.497
User Property	---	---
Partial Pressure of H2S (psig)	-14.70	---
Cp/(Cp - R)	1.120	1.120
Cp/Cv	1.148	1.148
Heat of Vap. (kJ/kgmole)	1.881e+004	---
Kinematic Viscosity (cSt)	0.7854	0.7854
Liq. Mass Density (Std. Cond) (kg/m3)	1015	1015
Liq. Vol. Flow (Std. Cond) (barrel/day)	285.1	285.1
Liquid Fraction	1.000	1.000
Molar Volume (m3/kgmole)	1.789e-002	1.789e-002
Mass Heat of Vap. (kJ/kg)	1044	---
Phase Fraction [Molar Basis]	0.0000	1.0000
Surface Tension (dyne/cm)	71.15	71.15
Thermal Conductivity (W/m-K)	0.6187	0.6187
Viscosity (cP)	0.7916	0.7916
Cv (Semi-Ideal) (kJ/kgmole-C)	69.10	69.10
Mass Cv (Semi-Ideal) (kJ/kg-C)	3.834	3.834
Cv (kJ/kgmole-C)	67.44	67.44
Mass Cv (kJ/kg-C)	3.741	3.741
Cv (Ent. Method) (kJ/kgmole-C)	66.91	66.91
Mass Cv (Ent. Method) (kJ/kg-C)	3.712	3.712
Cp/Cv (Ent. Method)	1.157	1.157
Reid VP at 37.8 C (psig)	---	---
True VP at 37.8 C (psig)	17.11	17.11
Liq. Vol. Flow - Sum(Std. Cond) (barrel/day)	285.1	285.1
HHV Molar Basis (Std) (Btu/SCF)	46.45	46.45
HHV Mass Basis (Std) (kJ/kg)	2274	2274
CO2 Loading	---	---
CO2 App ML Con (kgmole/m3)	2.222e-002	2.222e-002
CO2 App WT Con (kgmol/kg)	2.204e-005	2.204e-005
Phase Fraction [Act. Vol. Basis]	0.0000	1.000
Mass Exergy (kJ/kg)	17.16	---
Viscosity Index	-0.2852	---
Ideal Gas Cp/Cv	1.329	1.329
Ideal Gas Cp (kJ/kgmole-C)	33.61	33.61
Mass Ideal Gas Cp (kJ/kg-C)	1.864	1.864
Bubble Point Pressure (psig)	13.01	---

COMPOSITION

Overall Phase

Vapour Fraction 0.0000

COMPONENTS	MOLAR FLOW (kgmole/h)	MOLE FRACTION	MASS FLOW (tonne/d)	MASS FRACTION	LIQUID VOLUME FLOW (m3/h)	LIQUID VOLUME FRACTION
Methane	0.0000	0.0000	0.0000	0.0000	0.0000	0.0000
Ethane	0.0000	0.0000	0.0000	0.0000	0.0000	0.0000
Propane	0.0000	0.0000	0.0000	0.0000	0.0000	0.0000
i-Butane	0.0000	0.0000	0.0000	0.0000	0.0000	0.0000
n-Butane	0.0000	0.0000	0.0000	0.0000	0.0000	0.0000

* Specified by user.

Material Stream: 3 (continued)

Fluid Package: Basis-1
Property Package: Peng-Robinson

COMPOSITION

Overall Phase (continued)

Vapour Fraction 0.0000

COMPONENTS	MOLAR FLOW (kgmole/h)	MOLE FRACTION	MASS FLOW (tonne/d)	MASS FRACTION	LIQUID VOLUME FLOW (m3/h)	LIQUID VOLUME FRACTION
i-Pentane	0.0000	0.0000	0.0000	0.0000	0.0000	0.0000
n-Pentane	0.0000	0.0000	0.0000	0.0000	0.0000	0.0000
n-Hexane	0.0000	0.0000	0.0000	0.0000	0.0000	0.0000
Nitrogen	0.0008	0.0000	0.0006	0.0000	0.0000	0.0000
CO2	0.0423	0.0004	0.0446	0.0010	0.0023	0.0012
H2S	0.0000	0.0000	0.0000	0.0000	0.0000	0.0000
H2O	106.2938	0.9996	45.9575	0.9990	1.9188	0.9988
NBP[1]95*	0.0000	0.0000	0.0000	0.0000	0.0000	0.0000
NBP[1]121*	0.0000	0.0000	0.0000	0.0000	0.0000	0.0000
NBP[1]147*	0.0000	0.0000	0.0000	0.0000	0.0000	0.0000
NBP[1]171*	0.0000	0.0000	0.0000	0.0000	0.0000	0.0000
NBP[1]195*	0.0000	0.0000	0.0000	0.0000	0.0000	0.0000
NBP[1]222*	0.0000	0.0000	0.0000	0.0000	0.0000	0.0000
NBP[1]248*	0.0000	0.0000	0.0000	0.0000	0.0000	0.0000
NBP[1]273*	0.0000	0.0000	0.0000	0.0000	0.0000	0.0000
NBP[1]299*	0.0000	0.0000	0.0000	0.0000	0.0000	0.0000
NBP[1]325*	0.0000	0.0000	0.0000	0.0000	0.0000	0.0000
NBP[1]351*	0.0000	0.0000	0.0000	0.0000	0.0000	0.0000
NBP[1]377*	0.0000	0.0000	0.0000	0.0000	0.0000	0.0000
NBP[1]402*	0.0000	0.0000	0.0000	0.0000	0.0000	0.0000
NBP[1]428*	0.0000	0.0000	0.0000	0.0000	0.0000	0.0000
NBP[1]454*	0.0000	0.0000	0.0000	0.0000	0.0000	0.0000
NBP[1]480*	0.0000	0.0000	0.0000	0.0000	0.0000	0.0000
NBP[1]505*	0.0000	0.0000	0.0000	0.0000	0.0000	0.0000
NBP[1]531*	0.0000	0.0000	0.0000	0.0000	0.0000	0.0000
NBP[1]557*	0.0000	0.0000	0.0000	0.0000	0.0000	0.0000
NBP[1]582*	0.0000	0.0000	0.0000	0.0000	0.0000	0.0000
NBP[1]608*	0.0000	0.0000	0.0000	0.0000	0.0000	0.0000
NBP[1]634*	0.0000	0.0000	0.0000	0.0000	0.0000	0.0000
NBP[1]659*	0.0000	0.0000	0.0000	0.0000	0.0000	0.0000
NBP[1]685*	0.0000	0.0000	0.0000	0.0000	0.0000	0.0000
NBP[1]711*	0.0000	0.0000	0.0000	0.0000	0.0000	0.0000
NBP[1]736*	0.0000	0.0000	0.0000	0.0000	0.0000	0.0000
NBP[1]762*	0.0000	0.0000	0.0000	0.0000	0.0000	0.0000
NBP[1]788*	0.0000	0.0000	0.0000	0.0000	0.0000	0.0000
NBP[1]825*	0.0000	0.0000	0.0000	0.0000	0.0000	0.0000
NBP[1]873*	0.0000	0.0000	0.0000	0.0000	0.0000	0.0000
NBP[1]926*	0.0000	0.0000	0.0000	0.0000	0.0000	0.0000
NBP[1]978*	0.0000	0.0000	0.0000	0.0000	0.0000	0.0000
NBP[1]1021*	0.0000	0.0000	0.0000	0.0000	0.0000	0.0000
NBP[1]1075*	0.0000	0.0000	0.0000	0.0000	0.0000	0.0000
NBP[1]1123*	0.0000	0.0000	0.0000	0.0000	0.0000	0.0000
NBP[1]1173*	0.0000	0.0000	0.0000	0.0000	0.0000	0.0000
NBP[1]1250*	0.0000	0.0000	0.0000	0.0000	0.0000	0.0000
NBP[1]1339*	0.0000	0.0000	0.0000	0.0000	0.0000	0.0000
NBP[1]1432*	0.0000	0.0000	0.0000	0.0000	0.0000	0.0000
NBP[1]1528*	0.0000	0.0000	0.0000	0.0000	0.0000	0.0000
NBP[1]1637*	0.0000	0.0000	0.0000	0.0000	0.0000	0.0000
NBP[1]1732*	0.0000	0.0000	0.0000	0.0000	0.0000	0.0000
NBP[1]1819*	0.0000	0.0000	0.0000	0.0000	0.0000	0.0000
NBP[1]1913*	0.0000	0.0000	0.0000	0.0000	0.0000	0.0000
Total	106.3369	1.0000	46.0026	1.0000	1.9210	1.0000

* Specified by user.

Material Stream: 3 (continued)

Fluid Package: Basis-1
Property Package: Peng-Robinson

COMPOSITION

Aqueous Phase

Phase Fraction 1.000

COMPONENTS	MOLAR FLOW (kgmole/h)	MOLE FRACTION	MASS FLOW (tonne/d)	MASS FRACTION	LIQUID VOLUME FLOW (m3/h)	LIQUID VOLUME FRACTION
Methane	0.0000	0.0000	0.0000	0.0000	0.0000	0.0000
Ethane	0.0000	0.0000	0.0000	0.0000	0.0000	0.0000
Propane	0.0000	0.0000	0.0000	0.0000	0.0000	0.0000
i-Butane	0.0000	0.0000	0.0000	0.0000	0.0000	0.0000
n-Butane	0.0000	0.0000	0.0000	0.0000	0.0000	0.0000
i-Pentane	0.0000	0.0000	0.0000	0.0000	0.0000	0.0000
n-Pentane	0.0000	0.0000	0.0000	0.0000	0.0000	0.0000
n-Hexane	0.0000	0.0000	0.0000	0.0000	0.0000	0.0000
Nitrogen	0.0008	0.0000	0.0006	0.0000	0.0000	0.0000
CO2	0.0423	0.0004	0.0446	0.0010	0.0023	0.0012
H2S	0.0000	0.0000	0.0000	0.0000	0.0000	0.0000
H2O	106.2938	0.9996	45.9575	0.9990	1.9188	0.9988
NBP[1]95*	0.0000	0.0000	0.0000	0.0000	0.0000	0.0000
NBP[1]121*	0.0000	0.0000	0.0000	0.0000	0.0000	0.0000
NBP[1]147*	0.0000	0.0000	0.0000	0.0000	0.0000	0.0000
NBP[1]171*	0.0000	0.0000	0.0000	0.0000	0.0000	0.0000
NBP[1]195*	0.0000	0.0000	0.0000	0.0000	0.0000	0.0000
NBP[1]222*	0.0000	0.0000	0.0000	0.0000	0.0000	0.0000
NBP[1]248*	0.0000	0.0000	0.0000	0.0000	0.0000	0.0000
NBP[1]273*	0.0000	0.0000	0.0000	0.0000	0.0000	0.0000
NBP[1]299*	0.0000	0.0000	0.0000	0.0000	0.0000	0.0000
NBP[1]325*	0.0000	0.0000	0.0000	0.0000	0.0000	0.0000
NBP[1]351*	0.0000	0.0000	0.0000	0.0000	0.0000	0.0000
NBP[1]377*	0.0000	0.0000	0.0000	0.0000	0.0000	0.0000
NBP[1]402*	0.0000	0.0000	0.0000	0.0000	0.0000	0.0000
NBP[1]428*	0.0000	0.0000	0.0000	0.0000	0.0000	0.0000
NBP[1]454*	0.0000	0.0000	0.0000	0.0000	0.0000	0.0000
NBP[1]480*	0.0000	0.0000	0.0000	0.0000	0.0000	0.0000
NBP[1]505*	0.0000	0.0000	0.0000	0.0000	0.0000	0.0000
NBP[1]531*	0.0000	0.0000	0.0000	0.0000	0.0000	0.0000
NBP[1]557*	0.0000	0.0000	0.0000	0.0000	0.0000	0.0000
NBP[1]582*	0.0000	0.0000	0.0000	0.0000	0.0000	0.0000
NBP[1]608*	0.0000	0.0000	0.0000	0.0000	0.0000	0.0000
NBP[1]634*	0.0000	0.0000	0.0000	0.0000	0.0000	0.0000
NBP[1]659*	0.0000	0.0000	0.0000	0.0000	0.0000	0.0000
NBP[1]685*	0.0000	0.0000	0.0000	0.0000	0.0000	0.0000
NBP[1]711*	0.0000	0.0000	0.0000	0.0000	0.0000	0.0000
NBP[1]736*	0.0000	0.0000	0.0000	0.0000	0.0000	0.0000
NBP[1]762*	0.0000	0.0000	0.0000	0.0000	0.0000	0.0000
NBP[1]788*	0.0000	0.0000	0.0000	0.0000	0.0000	0.0000
NBP[1]825*	0.0000	0.0000	0.0000	0.0000	0.0000	0.0000
NBP[1]873*	0.0000	0.0000	0.0000	0.0000	0.0000	0.0000
NBP[1]926*	0.0000	0.0000	0.0000	0.0000	0.0000	0.0000
NBP[1]978*	0.0000	0.0000	0.0000	0.0000	0.0000	0.0000
NBP[1]1021*	0.0000	0.0000	0.0000	0.0000	0.0000	0.0000
NBP[1]1075*	0.0000	0.0000	0.0000	0.0000	0.0000	0.0000
NBP[1]1123*	0.0000	0.0000	0.0000	0.0000	0.0000	0.0000
NBP[1]1173*	0.0000	0.0000	0.0000	0.0000	0.0000	0.0000
NBP[1]1250*	0.0000	0.0000	0.0000	0.0000	0.0000	0.0000
NBP[1]1339*	0.0000	0.0000	0.0000	0.0000	0.0000	0.0000
NBP[1]1432*	0.0000	0.0000	0.0000	0.0000	0.0000	0.0000
NBP[1]1528*	0.0000	0.0000	0.0000	0.0000	0.0000	0.0000
NBP[1]1637*	0.0000	0.0000	0.0000	0.0000	0.0000	0.0000
NBP[1]1732*	0.0000	0.0000	0.0000	0.0000	0.0000	0.0000

* Specified by user.

Material Stream: 3 (continued)

Fluid Package: Basis-1
Property Package: Peng-Robinson

COMPOSITION

Aqueous Phase (continued)

Phase Fraction 1.000

COMPONENTS	MOLAR FLOW (kgmole/h)	MOLE FRACTION	MASS FLOW (tonne/d)	MASS FRACTION	LIQUID VOLUME FLOW (m3/h)	LIQUID VOLUME FRACTION
NBP[1]1819*	0.0000	0.0000	0.0000	0.0000	0.0000	0.0000
NBP[1]1913*	0.0000	0.0000	0.0000	0.0000	0.0000	0.0000
Total	106.3369	1.0000	46.0026	1.0000	1.9210	1.0000

Material Stream: 4

Fluid Package: Basis-1
Property Package: Peng-Robinson

CONDITIONS

		Overall	Vapour Phase	Aqueous Phase		
Vapour / Phase Fraction		0.9992	0.9992	0.0008		
Temperature:	(F)	89.00 *	89.00	89.00		
Pressure:	(psig)	2090	2090	2090		
Molar Flow	(MMSCFD)	5.381	5.377	4.470e-003		
Mass Flow	(tonne/d)	137.6	137.5	9.639e-002		
Std Ideal Liq Vol Flow	(barrel/day)	2403	2402	0.6078		
Molar Enthalpy	(kJ/kgmole)	-9.218e+004	-9.202e+004	-2.856e+005		
Molar Entropy	(kJ/kgmole-C)	139.7	139.8	55.33		
Heat Flow	(MMBtu/hr)	-23.42	-23.36	-6.026e-002		
Liq Vol Flow @Std Cond	(barrel/day)	9.528e+005 *	9.521e+005	0.5972		

PROPERTIES

		Overall	Vapour Phase	Aqueous Phase		
Molecular Weight		21.39	21.39	18.04		
Molar Density	(kgmole/m3)	8.289	8.283	55.82		
Mass Density	(kg/m3)	177.3	177.2	1007		
Act. Volume Flow	(barrel/day)	4881	4880	0.6021		
Mass Enthalpy	(kJ/kg)	-4311	-4302	-1.583e+004		
Mass Entropy	(kJ/kg-C)	6.534	6.536	3.067		
Heat Capacity	(kJ/kgmole-C)	72.28	72.28	77.41		
Mass Heat Capacity	(kJ/kg-C)	3.380	3.379	4.291		
LHV Molar Basis (Std)	(Btu/SCF)	---	---	6.218e-004		
LHV Mass Basis (Std)	(kJ/kg)	---	---	3.042e-002		
Phase Fraction [Vol. Basis]		0.9997	0.9997	2.529e-004		
Phase Fraction [Mass Basis]		0.9993	0.9993	7.007e-004		
Partial Pressure of CO2	(psig)	57.08	---	---		
Cost Based on Flow	(Cost/s)	0.0000	0.0000	0.0000		
Act. Gas Flow	(ACT_m3/h)	32.33	32.33	---		
Avg. Liq. Density	(kgmole/m3)	16.84	16.83	55.29		
Specific Heat	(kJ/kgmole-C)	72.28	72.28	77.41		
Std. Gas Flow	(STD_m3/h)	6337	6332	5.264		
Std. Ideal Liq. Mass Density	(kg/m3)	360.1	359.9	997.5		
Act. Liq. Flow	(barrel/day)	0.6021	---	0.6021		
Z Factor		---	0.6913	0.1026		
Watson K		17.28	17.28	8.473		
User Property		---	---	---		
Partial Pressure of H2S	(psig)	-14.69	---	---		
Cp/(Cp - R)		1.130	1.130	1.120		
Cp/Cv		1.988	1.989	1.149		
Heat of Vap.	(kJ/kgmole)	---	---	---		
Kinematic Viscosity	(cSt)	---	0.1150	0.7977		
Liq. Mass Density (Std. Cond)	(kg/m3)	0.9081	0.9082	1015		
Liq. Vol. Flow (Std. Cond)	(barrel/day)	9.528e+005	9.521e+005	0.5972		
Liquid Fraction		8.306e-004	0.0000	1.000		
Molar Volume	(m3/kgmole)	0.1206	0.1207	1.791e-002		

* Specified by user.

Material Stream: 4 (continued)

Fluid Package: Basis-1
Property Package: Peng-Robinson

PROPERTIES

		Overall	Vapour Phase	Aqueous Phase
Mass Heat of Vap.	(kJ/kg)	---	---	---
Phase Fraction [Molar Basis]		0.9992	0.9992	0.0008
Surface Tension	(dyne/cm)	70.87	---	70.87
Thermal Conductivity	(W/m-K)	---	5.535e-002	0.6196
Viscosity	(cP)	---	2.037e-002	0.8033
Cv (Semi-Ideal)	(kJ/kgmole-C)	63.97	63.96	69.10
Mass Cv (Semi-Ideal)	(kJ/kg-C)	2.991	2.990	3.830
Cv	(kJ/kgmole-C)	36.36	36.33	67.39
Mass Cv	(kJ/kg-C)	1.700	1.699	3.735
Cv (Ent. Method)	(kJ/kgmole-C)	37.47	36.33	66.85
Mass Cv (Ent. Method)	(kJ/kg-C)	1.752	1.699	3.705
Cp/Cv (Ent. Method)		1.929	1.989	1.158
Reid VP at 37.8 C	(psig)	---	---	---
True VP at 37.8 C	(psig)	3607	---	176.8
Liq. Vol. Flow - Sum(Std. Cond)	(barrel/day)	9.521e+005	9.521e+005	0.5972
HHV Molar Basis (Std)	(Btu/SCF)	---	---	46.42
HHV Mass Basis (Std)	(kJ/kg)	---	---	2271
CO2 Loading		---	---	---
CO2 App ML Con	(kgmole/m3)	---	---	5.413e-002
CO2 App WT Con	(kgmol/kg)	---	---	5.375e-005
Phase Fraction [Act. Vol. Basis]		0.9999	0.9999	1.233e-004
Mass Exergy	(kJ/kg)	523.8	---	---
Viscosity Index		---	---	---
Ideal Gas Cp/Cv		1.248	1.248	1.329
Ideal Gas Cp	(kJ/kgmole-C)	41.87	41.87	33.62
Mass Ideal Gas Cp	(kJ/kg-C)	1.958	1.958	1.863
Bubble Point Pressure	(psig)	4590	---	---

COMPOSITION

Overall Phase

Vapour Fraction 0.9992

COMPONENTS	MOLAR FLOW (kgmole/h)	MOLE FRACTION	MASS FLOW (tonne/d)	MASS FRACTION	LIQUID VOLUME FLOW (m3/h)	LIQUID VOLUME FRACTION
Methane	205.0219	0.7649	78.9395	0.5738	10.9860	0.6901
Ethane	27.6541	0.1032	19.9573	0.1451	2.3379	0.1469
Propane	13.5902	0.0507	14.3829	0.1046	1.1828	0.0743
i-Butane	1.5866	0.0059	2.2133	0.0161	0.1641	0.0103
n-Butane	2.8841	0.0108	4.0233	0.0292	0.2874	0.0181
i-Pentane	0.4635	0.0017	0.8025	0.0058	0.0536	0.0034
n-Pentane	0.4652	0.0017	0.8056	0.0059	0.0533	0.0033
n-Hexane	0.3694	0.0014	0.7639	0.0056	0.0480	0.0030
Nitrogen	5.5752	0.0208	3.7483	0.0272	0.1937	0.0122
CO2	9.1335	0.0341	9.6471	0.0701	0.4870	0.0306
H2S	0.0005	0.0000	0.0004	0.0000	0.0000	0.0000
H2O	0.3945	0.0015	0.1706	0.0012	0.0071	0.0004
NBP[1]95*	0.1425	0.0005	0.2323	0.0017	0.0142	0.0009
NBP[1]121*	0.1318	0.0005	0.2305	0.0017	0.0139	0.0009
NBP[1]147*	0.1254	0.0005	0.2414	0.0018	0.0144	0.0009
NBP[1]171*	0.1733	0.0006	0.3646	0.0027	0.0213	0.0013
NBP[1]195*	0.1579	0.0006	0.3546	0.0026	0.0205	0.0013
NBP[1]222*	0.0732	0.0003	0.1768	0.0013	0.0101	0.0006
NBP[1]248*	0.0375	0.0001	0.0974	0.0007	0.0055	0.0003
NBP[1]273*	0.0181	0.0001	0.0503	0.0004	0.0028	0.0002
NBP[1]299*	0.0083	0.0000	0.0245	0.0002	0.0014	0.0001
NBP[1]325*	0.0033	0.0000	0.0105	0.0001	0.0006	0.0000
NBP[1]351*	0.0015	0.0000	0.0050	0.0000	0.0003	0.0000
NBP[1]377*	0.0007	0.0000	0.0025	0.0000	0.0001	0.0000

Licensed to: PETROCHEMICAL ENGINEERIN
* Specified by user.

Material Stream: 4 (continued)

Fluid Package: Basis-1
Property Package: Peng-Robinson

COMPOSITION

Overall Phase (continued)

Vapour Fraction 0.9992

COMPONENTS	MOLAR FLOW (kgmole/h)	MOLE FRACTION	MASS FLOW (tonne/d)	MASS FRACTION	LIQUID VOLUME FLOW (m3/h)	LIQUID VOLUME FRACTION
NBP[1]402*	0.0003	0.0000	0.0013	0.0000	0.0001	0.0000
NBP[1]428*	0.0002	0.0000	0.0007	0.0000	0.0000	0.0000
NBP[1]454*	0.0001	0.0000	0.0003	0.0000	0.0000	0.0000
NBP[1]480*	0.0000	0.0000	0.0002	0.0000	0.0000	0.0000
NBP[1]505*	0.0000	0.0000	0.0001	0.0000	0.0000	0.0000
NBP[1]531*	0.0000	0.0000	0.0000	0.0000	0.0000	0.0000
NBP[1]557*	0.0000	0.0000	0.0000	0.0000	0.0000	0.0000
NBP[1]582*	0.0000	0.0000	0.0000	0.0000	0.0000	0.0000
NBP[1]608*	0.0000	0.0000	0.0000	0.0000	0.0000	0.0000
NBP[1]634*	0.0000	0.0000	0.0000	0.0000	0.0000	0.0000
NBP[1]659*	0.0000	0.0000	0.0000	0.0000	0.0000	0.0000
NBP[1]685*	0.0000	0.0000	0.0000	0.0000	0.0000	0.0000
NBP[1]711*	0.0000	0.0000	0.0000	0.0000	0.0000	0.0000
NBP[1]736*	0.0000	0.0000	0.0000	0.0000	0.0000	0.0000
NBP[1]762*	0.0000	0.0000	0.0000	0.0000	0.0000	0.0000
NBP[1]788*	0.0000	0.0000	0.0000	0.0000	0.0000	0.0000
NBP[1]825*	0.0000	0.0000	0.0000	0.0000	0.0000	0.0000
NBP[1]873*	0.0000	0.0000	0.0000	0.0000	0.0000	0.0000
NBP[1]926*	0.0000	0.0000	0.0000	0.0000	0.0000	0.0000
NBP[1]978*	0.0000	0.0000	0.0000	0.0000	0.0000	0.0000
NBP[1]1021*	0.0000	0.0000	0.0000	0.0000	0.0000	0.0000
NBP[1]1075*	0.0000	0.0000	0.0000	0.0000	0.0000	0.0000
NBP[1]1123*	0.0000	0.0000	0.0000	0.0000	0.0000	0.0000
NBP[1]1173*	0.0000	0.0000	0.0000	0.0000	0.0000	0.0000
NBP[1]1250*	0.0000	0.0000	0.0000	0.0000	0.0000	0.0000
NBP[1]1339*	0.0000	0.0000	0.0000	0.0000	0.0000	0.0000
NBP[1]1432*	0.0000	0.0000	0.0000	0.0000	0.0000	0.0000
NBP[1]1528*	0.0000	0.0000	0.0000	0.0000	0.0000	0.0000
NBP[1]1637*	0.0000	0.0000	0.0000	0.0000	0.0000	0.0000
NBP[1]1732*	0.0000	0.0000	0.0000	0.0000	0.0000	0.0000
NBP[1]1819*	0.0001	0.0000	0.0029	0.0000	0.0001	0.0000
NBP[1]1913*	0.0112	0.0000	0.3148	0.0023	0.0121	0.0008
Total	268.0242	1.0000	137.5655	1.0000	15.9186	1.0000

Vapour Phase

Phase Fraction 0.9992

COMPONENTS	MOLAR FLOW (kgmole/h)	MOLE FRACTION	MASS FLOW (tonne/d)	MASS FRACTION	LIQUID VOLUME FLOW (m3/h)	LIQUID VOLUME FRACTION
Methane	205.0219	0.7656	78.9395	0.5742	10.9860	0.6903
Ethane	27.6541	0.1033	19.9573	0.1452	2.3379	0.1469
Propane	13.5902	0.0507	14.3829	0.1046	1.1828	0.0743
i-Butane	1.5866	0.0059	2.2133	0.0161	0.1641	0.0103
n-Butane	2.8841	0.0108	4.0233	0.0293	0.2874	0.0181
i-Pentane	0.4635	0.0017	0.8025	0.0058	0.0536	0.0034
n-Pentane	0.4652	0.0017	0.8056	0.0059	0.0533	0.0033
n-Hexane	0.3694	0.0014	0.7639	0.0056	0.0480	0.0030
Nitrogen	5.5752	0.0208	3.7483	0.0273	0.1937	0.0122
CO2	9.1333	0.0341	9.6469	0.0702	0.4870	0.0306
H2S	0.0005	0.0000	0.0004	0.0000	0.0000	0.0000
H2O	0.1721	0.0006	0.0744	0.0005	0.0031	0.0002
NBP[1]95*	0.1425	0.0005	0.2323	0.0017	0.0142	0.0009
NBP[1]121*	0.1318	0.0005	0.2305	0.0017	0.0139	0.0009
NBP[1]147*	0.1254	0.0005	0.2414	0.0018	0.0144	0.0009
NBP[1]171*	0.1733	0.0006	0.3646	0.0027	0.0213	0.0013
NBP[1]195*	0.1579	0.0006	0.3546	0.0026	0.0205	0.0013

* Specified by user.

Material Stream: 4 (continued)

Fluid Package: Basis-1
Property Package: Peng-Robinson

COMPOSITION

Vapour Phase (continued)

Phase Fraction 0.9992

COMPONENTS	MOLAR FLOW (kgmole/h)	MOLE FRACTION	MASS FLOW (tonne/d)	MASS FRACTION	LIQUID VOLUME FLOW (m3/h)	LIQUID VOLUME FRACTION
NBP[1]222*	0.0732	0.0003	0.1768	0.0013	0.0101	0.0006
NBP[1]248*	0.0375	0.0001	0.0974	0.0007	0.0055	0.0003
NBP[1]273*	0.0181	0.0001	0.0503	0.0004	0.0028	0.0002
NBP[1]299*	0.0083	0.0000	0.0245	0.0002	0.0014	0.0001
NBP[1]325*	0.0033	0.0000	0.0105	0.0001	0.0006	0.0000
NBP[1]351*	0.0015	0.0000	0.0050	0.0000	0.0003	0.0000
NBP[1]377*	0.0007	0.0000	0.0025	0.0000	0.0001	0.0000
NBP[1]402*	0.0003	0.0000	0.0013	0.0000	0.0001	0.0000
NBP[1]428*	0.0002	0.0000	0.0007	0.0000	0.0000	0.0000
NBP[1]454*	0.0001	0.0000	0.0003	0.0000	0.0000	0.0000
NBP[1]480*	0.0000	0.0000	0.0002	0.0000	0.0000	0.0000
NBP[1]505*	0.0000	0.0000	0.0001	0.0000	0.0000	0.0000
NBP[1]531*	0.0000	0.0000	0.0000	0.0000	0.0000	0.0000
NBP[1]557*	0.0000	0.0000	0.0000	0.0000	0.0000	0.0000
NBP[1]582*	0.0000	0.0000	0.0000	0.0000	0.0000	0.0000
NBP[1]608*	0.0000	0.0000	0.0000	0.0000	0.0000	0.0000
NBP[1]634*	0.0000	0.0000	0.0000	0.0000	0.0000	0.0000
NBP[1]659*	0.0000	0.0000	0.0000	0.0000	0.0000	0.0000
NBP[1]685*	0.0000	0.0000	0.0000	0.0000	0.0000	0.0000
NBP[1]711*	0.0000	0.0000	0.0000	0.0000	0.0000	0.0000
NBP[1]736*	0.0000	0.0000	0.0000	0.0000	0.0000	0.0000
NBP[1]762*	0.0000	0.0000	0.0000	0.0000	0.0000	0.0000
NBP[1]788*	0.0000	0.0000	0.0000	0.0000	0.0000	0.0000
NBP[1]825*	0.0000	0.0000	0.0000	0.0000	0.0000	0.0000
NBP[1]873*	0.0000	0.0000	0.0000	0.0000	0.0000	0.0000
NBP[1]926*	0.0000	0.0000	0.0000	0.0000	0.0000	0.0000
NBP[1]978*	0.0000	0.0000	0.0000	0.0000	0.0000	0.0000
NBP[1]1021*	0.0000	0.0000	0.0000	0.0000	0.0000	0.0000
NBP[1]1075*	0.0000	0.0000	0.0000	0.0000	0.0000	0.0000
NBP[1]1123*	0.0000	0.0000	0.0000	0.0000	0.0000	0.0000
NBP[1]1173*	0.0000	0.0000	0.0000	0.0000	0.0000	0.0000
NBP[1]1250*	0.0000	0.0000	0.0000	0.0000	0.0000	0.0000
NBP[1]1339*	0.0000	0.0000	0.0000	0.0000	0.0000	0.0000
NBP[1]1432*	0.0000	0.0000	0.0000	0.0000	0.0000	0.0000
NBP[1]1528*	0.0000	0.0000	0.0000	0.0000	0.0000	0.0000
NBP[1]1637*	0.0000	0.0000	0.0000	0.0000	0.0000	0.0000
NBP[1]1732*	0.0000	0.0000	0.0000	0.0000	0.0000	0.0000
NBP[1]1819*	0.0001	0.0000	0.0029	0.0000	0.0001	0.0000
NBP[1]1913*	0.0112	0.0000	0.3148	0.0023	0.0121	0.0008
Total	267.8016	1.0000	137.4691	1.0000	15.9145	1.0000

Aqueous Phase

Phase Fraction 8.306e-004

COMPONENTS	MOLAR FLOW (kgmole/h)	MOLE FRACTION	MASS FLOW (tonne/d)	MASS FRACTION	LIQUID VOLUME FLOW (m3/h)	LIQUID VOLUME FRACTION
Methane	0.0000	0.0000	0.0000	0.0000	0.0000	0.0000
Ethane	0.0000	0.0000	0.0000	0.0000	0.0000	0.0000
Propane	0.0000	0.0000	0.0000	0.0000	0.0000	0.0000
i-Butane	0.0000	0.0000	0.0000	0.0000	0.0000	0.0000
n-Butane	0.0000	0.0000	0.0000	0.0000	0.0000	0.0000
i-Pentane	0.0000	0.0000	0.0000	0.0000	0.0000	0.0000
n-Pentane	0.0000	0.0000	0.0000	0.0000	0.0000	0.0000
n-Hexane	0.0000	0.0000	0.0000	0.0000	0.0000	0.0000
Nitrogen	0.0000	0.0000	0.0000	0.0001	0.0000	0.0001
CO2	0.0002	0.0010	0.0002	0.0024	0.0000	0.0029

* Specified by user.

Material Stream: 4 (continued)

Fluid Package: Basis-1
Property Package: Peng-Robinson

COMPOSITION

Aqueous Phase (continued)

Phase Fraction 8.306e-004

COMPONENTS	MOLAR FLOW (kgmole/h)	MOLE FRACTION	MASS FLOW (tonne/d)	MASS FRACTION	LIQUID VOLUME FLOW (m3/h)	LIQUID VOLUME FRACTION
H2S	0.0000	0.0000	0.0000	0.0000	0.0000	0.0000
H2O	0.2224	0.9990	0.0962	0.9976	0.0040	0.9971
NBP[1]95*	0.0000	0.0000	0.0000	0.0000	0.0000	0.0000
NBP[1]121*	0.0000	0.0000	0.0000	0.0000	0.0000	0.0000
NBP[1]147*	0.0000	0.0000	0.0000	0.0000	0.0000	0.0000
NBP[1]171*	0.0000	0.0000	0.0000	0.0000	0.0000	0.0000
NBP[1]195*	0.0000	0.0000	0.0000	0.0000	0.0000	0.0000
NBP[1]222*	0.0000	0.0000	0.0000	0.0000	0.0000	0.0000
NBP[1]248*	0.0000	0.0000	0.0000	0.0000	0.0000	0.0000
NBP[1]273*	0.0000	0.0000	0.0000	0.0000	0.0000	0.0000
NBP[1]299*	0.0000	0.0000	0.0000	0.0000	0.0000	0.0000
NBP[1]325*	0.0000	0.0000	0.0000	0.0000	0.0000	0.0000
NBP[1]351*	0.0000	0.0000	0.0000	0.0000	0.0000	0.0000
NBP[1]377*	0.0000	0.0000	0.0000	0.0000	0.0000	0.0000
NBP[1]402*	0.0000	0.0000	0.0000	0.0000	0.0000	0.0000
NBP[1]428*	0.0000	0.0000	0.0000	0.0000	0.0000	0.0000
NBP[1]454*	0.0000	0.0000	0.0000	0.0000	0.0000	0.0000
NBP[1]480*	0.0000	0.0000	0.0000	0.0000	0.0000	0.0000
NBP[1]505*	0.0000	0.0000	0.0000	0.0000	0.0000	0.0000
NBP[1]531*	0.0000	0.0000	0.0000	0.0000	0.0000	0.0000
NBP[1]557*	0.0000	0.0000	0.0000	0.0000	0.0000	0.0000
NBP[1]582*	0.0000	0.0000	0.0000	0.0000	0.0000	0.0000
NBP[1]608*	0.0000	0.0000	0.0000	0.0000	0.0000	0.0000
NBP[1]634*	0.0000	0.0000	0.0000	0.0000	0.0000	0.0000
NBP[1]659*	0.0000	0.0000	0.0000	0.0000	0.0000	0.0000
NBP[1]685*	0.0000	0.0000	0.0000	0.0000	0.0000	0.0000
NBP[1]711*	0.0000	0.0000	0.0000	0.0000	0.0000	0.0000
NBP[1]736*	0.0000	0.0000	0.0000	0.0000	0.0000	0.0000
NBP[1]762*	0.0000	0.0000	0.0000	0.0000	0.0000	0.0000
NBP[1]788*	0.0000	0.0000	0.0000	0.0000	0.0000	0.0000
NBP[1]825*	0.0000	0.0000	0.0000	0.0000	0.0000	0.0000
NBP[1]873*	0.0000	0.0000	0.0000	0.0000	0.0000	0.0000
NBP[1]926*	0.0000	0.0000	0.0000	0.0000	0.0000	0.0000
NBP[1]978*	0.0000	0.0000	0.0000	0.0000	0.0000	0.0000
NBP[1]1021*	0.0000	0.0000	0.0000	0.0000	0.0000	0.0000
NBP[1]1075*	0.0000	0.0000	0.0000	0.0000	0.0000	0.0000
NBP[1]1123*	0.0000	0.0000	0.0000	0.0000	0.0000	0.0000
NBP[1]1173*	0.0000	0.0000	0.0000	0.0000	0.0000	0.0000
NBP[1]1250*	0.0000	0.0000	0.0000	0.0000	0.0000	0.0000
NBP[1]1339*	0.0000	0.0000	0.0000	0.0000	0.0000	0.0000
NBP[1]1432*	0.0000	0.0000	0.0000	0.0000	0.0000	0.0000
NBP[1]1528*	0.0000	0.0000	0.0000	0.0000	0.0000	0.0000
NBP[1]1637*	0.0000	0.0000	0.0000	0.0000	0.0000	0.0000
NBP[1]1732*	0.0000	0.0000	0.0000	0.0000	0.0000	0.0000
NBP[1]1819*	0.0000	0.0000	0.0000	0.0000	0.0000	0.0000
NBP[1]1913*	0.0000	0.0000	0.0000	0.0000	0.0000	0.0000
Total	0.2226	1.0000	0.0964	1.0000	0.0040	1.0000

Material Stream: 5

Fluid Package: Basis-1
Property Package: Peng-Robinson

CONDITIONS

	Overall	Vapour Phase	Liquid Phase	Aqueous Phase
Vapour / Phase Fraction	0.6644	0.6644	0.0637	0.2719

Licensed to: PETROCHEMICAL ENGINEERIN
* Specified by user.

Material Stream: 5 (continued)

Fluid Package: Basis-1
Property Package: Peng-Robinson

CONDITIONS

		Overall	Vapour Phase	Liquid Phase	Aqueous Phase
Temperature:	(F)	89.98	89.98	89.98	89.98
Pressure:	(psig)	2090	2090	2090	2090
Molar Flow	(MMSCFD)	7.874	5.231	0.5019	2.140
Mass Flow	(tonne/d)	237.5	139.1	52.25	46.16
Std Ideal Liq Vol Flow	(barrel/day)	3142	2371	479.9	291.0
Molar Enthalpy	(kJ/kgmole)	-1.534e+005	-9.314e+004	-2.178e+005	-2.855e+005
Molar Entropy	(kJ/kgmole-C)	120.5	139.7	197.5	55.46
Heat Flow	(MMBtu/hr)	-57.01	-23.00	-5.161	-28.85
Liq Vol Flow @Std Cond	(barrel/day)	2.954e+005 *	9.260e+005	461.5	286.0

PROPERTIES

		Overall	Vapour Phase	Liquid Phase	Aqueous Phase
Molecular Weight		25.24	22.25	87.09	18.04
Molar Density	(kgmole/m3)	10.98	8.487	8.041	55.80
Mass Density	(kg/m3)	277.1	188.8	700.3	1007
Act. Volume Flow	(barrel/day)	5392	4634	469.3	288.4
Mass Enthalpy	(kJ/kg)	-6077	-4186	-2501	-1.583e+004
Mass Entropy	(kJ/kg-C)	4.773	6.278	2.268	3.074
Heat Capacity	(kJ/kgmole-C)	83.30	76.12	183.3	77.41
Mass Heat Capacity	(kJ/kg-C)	3.300	3.421	2.104	4.291
LHV Molar Basis (Std)	(Btu/SCF)	---	---	---	6.334e-004
LHV Mass Basis (Std)	(kJ/kg)	---	---	---	3.099e-002
Phase Fraction [Vol. Basis]		0.7547	0.7547	0.1527	9.262e-002
Phase Fraction [Mass Basis]		0.5858	0.5858	0.2199	0.1943
Partial Pressure of CO2	(psig)	54.43	---	---	---
Cost Based on Flow	(Cost/s)	0.0000	0.0000	0.0000	0.0000
Act. Gas Flow	(ACT_m3/h)	30.70	30.70	---	---
Avg. Liq. Density	(kgmole/m3)	18.84	16.59	7.864	55.30
Specific Heat	(kJ/kgmole-C)	83.30	76.12	183.3	77.41
Std. Gas Flow	(STD_m3/h)	9272	6161	591.0	2521
Std. Ideal Liq. Mass Density	(kg/m3)	475.5	369.1	684.8	997.5
Act. Liq. Flow	(barrel/day)	757.7	---	469.3	288.4
Z Factor		---	0.6735	0.7108	0.1024
Watson K		15.58	16.99	12.28	8.469
User Property		---	---	---	---
Partial Pressure of H2S	(psig)	-14.69	---	---	---
Cp/(Cp - R)		1.111	1.123	1.048	1.120
Cp/Cv		1.471	2.007	1.291	1.149
Heat of Vap.	(kJ/kgmole)	6.038e+004	---	---	---
Kinematic Viscosity	(cSt)	---	0.1117	1.948	0.7558
Liq. Mass Density (Std. Cond)	(kg/m3)	5.058	0.9452	712.1	1015
Liq. Vol. Flow (Std. Cond)	(barrel/day)	2.954e+005	9.260e+005	461.5	286.0
Liquid Fraction		0.3356	0.0000	1.000	1.000
Molar Volume	(m3/kgmole)	9.108e-002	0.1178	0.1244	1.792e-002
Mass Heat of Vap.	(kJ/kg)	2392	---	---	---
Phase Fraction [Molar Basis]		0.6644	0.6644	0.0637	0.2719
Surface Tension	(dyne/cm)	---	---	9.238	70.78
Thermal Conductivity	(W/m-K)	---	5.650e-002	8.530e-002	0.6213
Viscosity	(cP)	---	2.109e-002	1.364	0.7608
Cv (Semi-Ideal)	(kJ/kgmole-C)	74.98	67.80	175.0	69.10
Mass Cv (Semi-Ideal)	(kJ/kg-C)	2.971	3.047	2.009	3.831
Cv	(kJ/kgmole-C)	56.65	37.93	142.0	67.38
Mass Cv	(kJ/kg-C)	2.244	1.705	1.630	3.735
Cv (Ent. Method)	(kJ/kgmole-C)	---	36.85	---	66.76
Mass Cv (Ent. Method)	(kJ/kg-C)	---	1.656	---	3.701
Cp/Cv (Ent. Method)		---	2.065	---	1.160
Reid VP at 37.8 C	(psig)	3319	2452	399.0	---

* Specified by user.

Material Stream: 5 (continued)

Fluid Package: Basis-1
Property Package: Peng-Robinson

PROPERTIES

		Overall	Vapour Phase	Liquid Phase	Aqueous Phase
True VP at 37.8 C	(psig)	6318	2453	2168	182.1
Liq. Vol. Flow - Sum(Std. Cond)	(barrel/day)	9.267e+005	9.260e+005	461.5	286.0
HHV Molar Basis (Std)	(Btu/SCF)	---	---	---	46.42
HHV Mass Basis (Std)	(kJ/kg)	---	---	---	2271
CO2 Loading		---	---	---	---
CO2 App ML Con	(kgmole/m3)	---	---	0.2444	5.118e-002
CO2 App WT Con	(kgmol/kg)	---	---	3.490e-004	5.084e-005
Phase Fraction [Act. Vol. Basis]		0.8595	0.8595	8.703e-002	5.349e-002
Mass Exergy	(kJ/kg)	317.7	---	---	---
Viscosity Index		-33.28	---	---	---
Ideal Gas Cp/Cv		1.215	1.238	1.062	1.329
Ideal Gas Cp	(kJ/kgmole-C)	46.91	43.24	141.8	33.62
Mass Ideal Gas Cp	(kJ/kg-C)	1.859	1.943	1.628	1.864
Bubble Point Pressure	(psig)	6228	---	---	---

COMPOSITION

Overall Phase

Vapour Fraction 0.6644

COMPONENTS	MOLAR FLOW (kgmole/h)	MOLE FRACTION	MASS FLOW (tonne/d)	MASS FRACTION	LIQUID VOLUME FLOW (m3/h)	LIQUID VOLUME FRACTION
Methane	207.0440	0.5280	79.7181	0.3356	11.0944	0.5330
Ethane	28.8006	0.0734	20.7848	0.0875	2.4348	0.1170
Propane	15.2677	0.0389	16.1583	0.0680	1.3288	0.0638
i-Butane	2.0287	0.0052	2.8300	0.0119	0.2098	0.0101
n-Butane	3.9513	0.0101	5.5120	0.0232	0.3938	0.0189
i-Pentane	0.8495	0.0022	1.4710	0.0062	0.0983	0.0047
n-Pentane	0.9602	0.0024	1.6627	0.0070	0.1100	0.0053
n-Hexane	1.4698	0.0037	3.0399	0.0128	0.1911	0.0092
Nitrogen	5.5989	0.0143	3.7642	0.0158	0.1945	0.0093
CO2	9.4151	0.0240	9.9445	0.0419	0.5020	0.0241
H2S	0.0006	0.0000	0.0005	0.0000	0.0000	0.0000
H2O	106.6990	0.2721	46.1326	0.1942	1.9261	0.0925
NBP[1]95*	0.2883	0.0007	0.4699	0.0020	0.0288	0.0014
NBP[1]121*	0.3381	0.0009	0.5912	0.0025	0.0358	0.0017
NBP[1]147*	0.4314	0.0011	0.8304	0.0035	0.0494	0.0024
NBP[1]171*	0.8224	0.0021	1.7306	0.0073	0.1013	0.0049
NBP[1]195*	1.0758	0.0027	2.4160	0.0102	0.1398	0.0067
NBP[1]222*	0.8003	0.0020	1.9331	0.0081	0.1105	0.0053
NBP[1]248*	0.6657	0.0017	1.7287	0.0073	0.0976	0.0047
NBP[1]273*	0.5358	0.0014	1.4881	0.0063	0.0831	0.0040
NBP[1]299*	0.4185	0.0011	1.2393	0.0052	0.0684	0.0033
NBP[1]325*	0.3029	0.0008	0.9528	0.0040	0.0521	0.0025
NBP[1]351*	0.2456	0.0006	0.8214	0.0035	0.0445	0.0021
NBP[1]377*	0.2247	0.0006	0.8014	0.0034	0.0429	0.0021
NBP[1]402*	0.2061	0.0005	0.7838	0.0033	0.0416	0.0020
NBP[1]428*	0.1961	0.0005	0.7956	0.0033	0.0418	0.0020
NBP[1]454*	0.1956	0.0005	0.8480	0.0036	0.0441	0.0021
NBP[1]480*	0.1982	0.0005	0.9182	0.0039	0.0473	0.0023
NBP[1]505*	0.1920	0.0005	0.9484	0.0040	0.0484	0.0023
NBP[1]531*	0.1852	0.0005	0.9740	0.0041	0.0492	0.0024
NBP[1]557*	0.1784	0.0005	0.9978	0.0042	0.0500	0.0024
NBP[1]582*	0.1706	0.0004	1.0132	0.0043	0.0503	0.0024
NBP[1]608*	0.1643	0.0004	1.0351	0.0044	0.0510	0.0025
NBP[1]634*	0.1611	0.0004	1.0753	0.0045	0.0526	0.0025
NBP[1]659*	0.1586	0.0004	1.1194	0.0047	0.0543	0.0026
NBP[1]685*	0.1641	0.0004	1.2227	0.0051	0.0588	0.0028
NBP[1]711*	0.1715	0.0004	1.3445	0.0057	0.0642	0.0031

* Specified by user.

Material Stream: 5 (continued)

Fluid Package: Basis-1
Property Package: Peng-Robinson

COMPOSITION

Overall Phase (continued)

Vapour Fraction 0.6644

COMPONENTS	MOLAR FLOW (kgmole/h)	MOLE FRACTION	MASS FLOW (tonne/d)	MASS FRACTION	LIQUID VOLUME FLOW (m3/h)	LIQUID VOLUME FRACTION
NBP[1]736*	0.1697	0.0004	1.3915	0.0059	0.0659	0.0032
NBP[1]762*	0.1653	0.0004	1.4214	0.0060	0.0669	0.0032
NBP[1]788*	0.1585	0.0004	1.4424	0.0061	0.0674	0.0032
NBP[1]825*	0.2655	0.0007	2.5963	0.0109	0.1201	0.0058
NBP[1]873*	0.1830	0.0005	1.9404	0.0082	0.0887	0.0043
NBP[1]926*	0.1437	0.0004	1.6472	0.0069	0.0744	0.0036
NBP[1]978*	0.1474	0.0004	1.8524	0.0078	0.0825	0.0040
NBP[1]1021*	0.0728	0.0002	0.9655	0.0041	0.0426	0.0020
NBP[1]1075*	0.0449	0.0001	0.6310	0.0027	0.0276	0.0013
NBP[1]1123*	0.0417	0.0001	0.6267	0.0026	0.0271	0.0013
NBP[1]1173*	0.0300	0.0001	0.4772	0.0020	0.0205	0.0010
NBP[1]1250*	0.0393	0.0001	0.6767	0.0028	0.0287	0.0014
NBP[1]1339*	0.0364	0.0001	0.6999	0.0029	0.0291	0.0014
NBP[1]1432*	0.0257	0.0001	0.5397	0.0023	0.0221	0.0011
NBP[1]1528*	0.0180	0.0000	0.4082	0.0017	0.0165	0.0008
NBP[1]1637*	0.0127	0.0000	0.3047	0.0013	0.0122	0.0006
NBP[1]1732*	0.0101	0.0000	0.2565	0.0011	0.0101	0.0005
NBP[1]1819*	0.0097	0.0000	0.2590	0.0011	0.0101	0.0005
NBP[1]1913*	0.0112	0.0000	0.3148	0.0013	0.0121	0.0006
Total	392.1623	1.0000	237.5489	1.0000	20.8162	1.0000

Vapour Phase

Phase Fraction 0.6644

COMPONENTS	MOLAR FLOW (kgmole/h)	MOLE FRACTION	MASS FLOW (tonne/d)	MASS FRACTION	LIQUID VOLUME FLOW (m3/h)	LIQUID VOLUME FRACTION
Methane	197.5775	0.7583	76.0732	0.5467	10.5871	0.6739
Ethane	26.2225	0.1006	18.9242	0.1360	2.2169	0.1411
Propane	13.0983	0.0503	13.8623	0.0996	1.1400	0.0726
i-Butane	1.6359	0.0063	2.2820	0.0164	0.1692	0.0108
n-Butane	3.0834	0.0118	4.3013	0.0309	0.3073	0.0196
i-Pentane	0.6045	0.0023	1.0467	0.0075	0.0700	0.0045
n-Pentane	0.6554	0.0025	1.1349	0.0082	0.0751	0.0048
n-Hexane	0.8360	0.0032	1.7292	0.0124	0.1087	0.0069
Nitrogen	5.4316	0.0208	3.6517	0.0262	0.1887	0.0120
CO2	8.5576	0.0328	9.0388	0.0650	0.4563	0.0290
H2S	0.0005	0.0000	0.0004	0.0000	0.0000	0.0000
H2O	0.1735	0.0007	0.0750	0.0005	0.0031	0.0002
NBP[1]95*	0.1967	0.0008	0.3207	0.0023	0.0197	0.0013
NBP[1]121*	0.2150	0.0008	0.3759	0.0027	0.0227	0.0014
NBP[1]147*	0.2517	0.0010	0.4844	0.0035	0.0288	0.0018
NBP[1]171*	0.4368	0.0017	0.9192	0.0066	0.0538	0.0034
NBP[1]195*	0.5145	0.0020	1.1554	0.0083	0.0668	0.0043
NBP[1]222*	0.3330	0.0013	0.8042	0.0058	0.0460	0.0029
NBP[1]248*	0.2380	0.0009	0.6181	0.0044	0.0349	0.0022
NBP[1]273*	0.1618	0.0006	0.4493	0.0032	0.0251	0.0016
NBP[1]299*	0.1047	0.0004	0.3099	0.0022	0.0171	0.0011
NBP[1]325*	0.0612	0.0002	0.1925	0.0014	0.0105	0.0007
NBP[1]351*	0.0393	0.0002	0.1314	0.0009	0.0071	0.0005
NBP[1]377*	0.0276	0.0001	0.0984	0.0007	0.0053	0.0003
NBP[1]402*	0.0192	0.0001	0.0730	0.0005	0.0039	0.0002
NBP[1]428*	0.0136	0.0001	0.0550	0.0004	0.0029	0.0002
NBP[1]454*	0.0099	0.0000	0.0428	0.0003	0.0022	0.0001
NBP[1]480*	0.0072	0.0000	0.0333	0.0002	0.0017	0.0001
NBP[1]505*	0.0049	0.0000	0.0243	0.0002	0.0012	0.0001
NBP[1]531*	0.0033	0.0000	0.0174	0.0001	0.0009	0.0001

* Specified by user.

Material Stream: 5 (continued)

Fluid Package: Basis-1
Property Package: Peng-Robinson

COMPOSITION

Vapour Phase (continued)

Phase Fraction 0.6644

COMPONENTS	MOLAR FLOW (kgmole/h)	MOLE FRACTION	MASS FLOW (tonne/d)	MASS FRACTION	LIQUID VOLUME FLOW (m3/h)	LIQUID VOLUME FRACTION
NBP[1]557*	0.0022	0.0000	0.0122	0.0001	0.0006	0.0000
NBP[1]582*	0.0014	0.0000	0.0084	0.0001	0.0004	0.0000
NBP[1]608*	0.0009	0.0000	0.0057	0.0000	0.0003	0.0000
NBP[1]634*	0.0006	0.0000	0.0039	0.0000	0.0002	0.0000
NBP[1]659*	0.0004	0.0000	0.0026	0.0000	0.0001	0.0000
NBP[1]685*	0.0002	0.0000	0.0018	0.0000	0.0001	0.0000
NBP[1]711*	0.0002	0.0000	0.0013	0.0000	0.0001	0.0000
NBP[1]736*	0.0001	0.0000	0.0008	0.0000	0.0000	0.0000
NBP[1]762*	0.0001	0.0000	0.0005	0.0000	0.0000	0.0000
NBP[1]788*	0.0000	0.0000	0.0003	0.0000	0.0000	0.0000
NBP[1]825*	0.0000	0.0000	0.0003	0.0000	0.0000	0.0000
NBP[1]873*	0.0000	0.0000	0.0001	0.0000	0.0000	0.0000
NBP[1]926*	0.0000	0.0000	0.0000	0.0000	0.0000	0.0000
NBP[1]978*	0.0000	0.0000	0.0000	0.0000	0.0000	0.0000
NBP[1]1021*	0.0000	0.0000	0.0000	0.0000	0.0000	0.0000
NBP[1]1075*	0.0000	0.0000	0.0000	0.0000	0.0000	0.0000
NBP[1]1123*	0.0000	0.0000	0.0000	0.0000	0.0000	0.0000
NBP[1]1173*	0.0000	0.0000	0.0000	0.0000	0.0000	0.0000
NBP[1]1250*	0.0000	0.0000	0.0000	0.0000	0.0000	0.0000
NBP[1]1339*	0.0000	0.0000	0.0000	0.0000	0.0000	0.0000
NBP[1]1432*	0.0000	0.0000	0.0000	0.0000	0.0000	0.0000
NBP[1]1528*	0.0000	0.0000	0.0000	0.0000	0.0000	0.0000
NBP[1]1637*	0.0022	0.0000	0.0525	0.0004	0.0021	0.0001
NBP[1]1732*	0.0101	0.0000	0.2565	0.0018	0.0101	0.0006
NBP[1]1819*	0.0097	0.0000	0.2590	0.0019	0.0101	0.0006
NBP[1]1913*	0.0112	0.0000	0.3148	0.0023	0.0121	0.0008
Total	260.5541	1.0000	139.1456	1.0000	15.7094	1.0000

Liquid Phase

Phase Fraction 6.374e-002

COMPONENTS	MOLAR FLOW (kgmole/h)	MOLE FRACTION	MASS FLOW (tonne/d)	MASS FRACTION	LIQUID VOLUME FLOW (m3/h)	LIQUID VOLUME FRACTION
Methane	9.4664	0.3787	3.6448	0.0698	0.5073	0.1596
Ethane	2.5781	0.1031	1.8606	0.0356	0.2180	0.0686
Propane	2.1695	0.0868	2.2960	0.0439	0.1888	0.0594
i-Butane	0.3928	0.0157	0.5480	0.0105	0.0406	0.0128
n-Butane	0.8679	0.0347	1.2107	0.0232	0.0865	0.0272
i-Pentane	0.2450	0.0098	0.4243	0.0081	0.0284	0.0089
n-Pentane	0.3048	0.0122	0.5279	0.0101	0.0349	0.0110
n-Hexane	0.6338	0.0254	1.3108	0.0251	0.0824	0.0259
Nitrogen	0.1633	0.0065	0.1098	0.0021	0.0057	0.0018
CO2	0.7597	0.0304	0.8024	0.0154	0.0405	0.0127
H2S	0.0001	0.0000	0.0001	0.0000	0.0000	0.0000
H2O	0.0162	0.0006	0.0070	0.0001	0.0003	0.0001
NBP[1]95*	0.0915	0.0037	0.1492	0.0029	0.0091	0.0029
NBP[1]121*	0.1231	0.0049	0.2153	0.0041	0.0130	0.0041
NBP[1]147*	0.1798	0.0072	0.3460	0.0066	0.0206	0.0065
NBP[1]171*	0.3856	0.0154	0.8114	0.0155	0.0475	0.0149
NBP[1]195*	0.5613	0.0225	1.2606	0.0241	0.0729	0.0229
NBP[1]222*	0.4674	0.0187	1.1289	0.0216	0.0645	0.0203
NBP[1]248*	0.4276	0.0171	1.1106	0.0213	0.0627	0.0197
NBP[1]273*	0.3741	0.0150	1.0389	0.0199	0.0580	0.0182
NBP[1]299*	0.3138	0.0126	0.9293	0.0178	0.0513	0.0161
NBP[1]325*	0.2417	0.0097	0.7602	0.0146	0.0416	0.0131
NBP[1]351*	0.2063	0.0083	0.6900	0.0132	0.0374	0.0118

* Specified by user.

Material Stream: 5 (continued)

Fluid Package: Basis-1
Property Package: Peng-Robinson

COMPOSITION

Liquid Phase (continued)

Phase Fraction 6.374e-002

COMPONENTS	MOLAR FLOW (kgmole/h)	MOLE FRACTION	MASS FLOW (tonne/d)	MASS FRACTION	LIQUID VOLUME FLOW (m3/h)	LIQUID VOLUME FRACTION
NBP[1]377*	0.1971	0.0079	0.7030	0.0135	0.0377	0.0118
NBP[1]402*	0.1869	0.0075	0.7108	0.0136	0.0377	0.0119
NBP[1]428*	0.1825	0.0073	0.7405	0.0142	0.0389	0.0122
NBP[1]454*	0.1857	0.0074	0.8052	0.0154	0.0419	0.0132
NBP[1]480*	0.1910	0.0076	0.8849	0.0169	0.0456	0.0143
NBP[1]505*	0.1871	0.0075	0.9240	0.0177	0.0471	0.0148
NBP[1]531*	0.1819	0.0073	0.9566	0.0183	0.0484	0.0152
NBP[1]557*	0.1762	0.0071	0.9856	0.0189	0.0494	0.0155
NBP[1]582*	0.1692	0.0068	1.0048	0.0192	0.0499	0.0157
NBP[1]608*	0.1634	0.0065	1.0294	0.0197	0.0507	0.0160
NBP[1]634*	0.1605	0.0064	1.0714	0.0205	0.0524	0.0165
NBP[1]659*	0.1582	0.0063	1.1168	0.0214	0.0542	0.0170
NBP[1]685*	0.1639	0.0066	1.2209	0.0234	0.0587	0.0185
NBP[1]711*	0.1714	0.0069	1.3432	0.0257	0.0641	0.0202
NBP[1]736*	0.1696	0.0068	1.3907	0.0266	0.0659	0.0207
NBP[1]762*	0.1652	0.0066	1.4209	0.0272	0.0668	0.0210
NBP[1]788*	0.1584	0.0063	1.4420	0.0276	0.0674	0.0212
NBP[1]825*	0.2654	0.0106	2.5960	0.0497	0.1201	0.0378
NBP[1]873*	0.1830	0.0073	1.9403	0.0371	0.0887	0.0279
NBP[1]926*	0.1437	0.0058	1.6471	0.0315	0.0744	0.0234
NBP[1]978*	0.1474	0.0059	1.8524	0.0355	0.0825	0.0260
NBP[1]1021*	0.0728	0.0029	0.9655	0.0185	0.0426	0.0134
NBP[1]1075*	0.0449	0.0018	0.6310	0.0121	0.0276	0.0087
NBP[1]1123*	0.0417	0.0017	0.6267	0.0120	0.0271	0.0085
NBP[1]1173*	0.0300	0.0012	0.4772	0.0091	0.0205	0.0064
NBP[1]1250*	0.0393	0.0016	0.6767	0.0130	0.0287	0.0090
NBP[1]1339*	0.0364	0.0015	0.6999	0.0134	0.0291	0.0092
NBP[1]1432*	0.0257	0.0010	0.5397	0.0103	0.0221	0.0070
NBP[1]1528*	0.0180	0.0007	0.4082	0.0078	0.0165	0.0052
NBP[1]1637*	0.0105	0.0004	0.2521	0.0048	0.0101	0.0032
NBP[1]1732*	0.0000	0.0000	0.0000	0.0000	0.0000	0.0000
NBP[1]1819*	0.0000	0.0000	0.0000	0.0000	0.0000	0.0000
NBP[1]1913*	0.0000	0.0000	0.0000	0.0000	0.0000	0.0000
Total	24.9971	1.0000	52.2467	1.0000	3.1788	1.0000

Aqueous Phase

Phase Fraction 0.2719

COMPONENTS	MOLAR FLOW (kgmole/h)	MOLE FRACTION	MASS FLOW (tonne/d)	MASS FRACTION	LIQUID VOLUME FLOW (m3/h)	LIQUID VOLUME FRACTION
Methane	0.0001	0.0000	0.0000	0.0000	0.0000	0.0000
Ethane	0.0000	0.0000	0.0000	0.0000	0.0000	0.0000
Propane	0.0000	0.0000	0.0000	0.0000	0.0000	0.0000
i-Butane	0.0000	0.0000	0.0000	0.0000	0.0000	0.0000
n-Butane	0.0000	0.0000	0.0000	0.0000	0.0000	0.0000
i-Pentane	0.0000	0.0000	0.0000	0.0000	0.0000	0.0000
n-Pentane	0.0000	0.0000	0.0000	0.0000	0.0000	0.0000
n-Hexane	0.0000	0.0000	0.0000	0.0000	0.0000	0.0000
Nitrogen	0.0040	0.0000	0.0027	0.0001	0.0001	0.0001
CO2	0.0978	0.0009	0.1033	0.0022	0.0052	0.0027
H2S	0.0000	0.0000	0.0000	0.0000	0.0000	0.0000
H2O	106.5092	0.9990	46.0506	0.9977	1.9226	0.9972
NBP[1]95*	0.0000	0.0000	0.0000	0.0000	0.0000	0.0000
NBP[1]121*	0.0000	0.0000	0.0000	0.0000	0.0000	0.0000
NBP[1]147*	0.0000	0.0000	0.0000	0.0000	0.0000	0.0000
NBP[1]171*	0.0000	0.0000	0.0000	0.0000	0.0000	0.0000

* Specified by user.

Material Stream: 5 (continued)

Fluid Package: Basis-1
Property Package: Peng-Robinson

COMPOSITION

Aqueous Phase (continued)

Phase Fraction 0.2719

COMPONENTS	MOLAR FLOW (kgmole/h)	MOLE FRACTION	MASS FLOW (tonne/d)	MASS FRACTION	LIQUID VOLUME FLOW (m3/h)	LIQUID VOLUME FRACTION
NBP[1]195*	0.0000	0.0000	0.0000	0.0000	0.0000	0.0000
NBP[1]222*	0.0000	0.0000	0.0000	0.0000	0.0000	0.0000
NBP[1]248*	0.0000	0.0000	0.0000	0.0000	0.0000	0.0000
NBP[1]273*	0.0000	0.0000	0.0000	0.0000	0.0000	0.0000
NBP[1]299*	0.0000	0.0000	0.0000	0.0000	0.0000	0.0000
NBP[1]325*	0.0000	0.0000	0.0000	0.0000	0.0000	0.0000
NBP[1]351*	0.0000	0.0000	0.0000	0.0000	0.0000	0.0000
NBP[1]377*	0.0000	0.0000	0.0000	0.0000	0.0000	0.0000
NBP[1]402*	0.0000	0.0000	0.0000	0.0000	0.0000	0.0000
NBP[1]428*	0.0000	0.0000	0.0000	0.0000	0.0000	0.0000
NBP[1]454*	0.0000	0.0000	0.0000	0.0000	0.0000	0.0000
NBP[1]480*	0.0000	0.0000	0.0000	0.0000	0.0000	0.0000
NBP[1]505*	0.0000	0.0000	0.0000	0.0000	0.0000	0.0000
NBP[1]531*	0.0000	0.0000	0.0000	0.0000	0.0000	0.0000
NBP[1]557*	0.0000	0.0000	0.0000	0.0000	0.0000	0.0000
NBP[1]582*	0.0000	0.0000	0.0000	0.0000	0.0000	0.0000
NBP[1]608*	0.0000	0.0000	0.0000	0.0000	0.0000	0.0000
NBP[1]634*	0.0000	0.0000	0.0000	0.0000	0.0000	0.0000
NBP[1]659*	0.0000	0.0000	0.0000	0.0000	0.0000	0.0000
NBP[1]685*	0.0000	0.0000	0.0000	0.0000	0.0000	0.0000
NBP[1]711*	0.0000	0.0000	0.0000	0.0000	0.0000	0.0000
NBP[1]736*	0.0000	0.0000	0.0000	0.0000	0.0000	0.0000
NBP[1]762*	0.0000	0.0000	0.0000	0.0000	0.0000	0.0000
NBP[1]788*	0.0000	0.0000	0.0000	0.0000	0.0000	0.0000
NBP[1]825*	0.0000	0.0000	0.0000	0.0000	0.0000	0.0000
NBP[1]873*	0.0000	0.0000	0.0000	0.0000	0.0000	0.0000
NBP[1]926*	0.0000	0.0000	0.0000	0.0000	0.0000	0.0000
NBP[1]978*	0.0000	0.0000	0.0000	0.0000	0.0000	0.0000
NBP[1]1021*	0.0000	0.0000	0.0000	0.0000	0.0000	0.0000
NBP[1]1075*	0.0000	0.0000	0.0000	0.0000	0.0000	0.0000
NBP[1]1123*	0.0000	0.0000	0.0000	0.0000	0.0000	0.0000
NBP[1]1173*	0.0000	0.0000	0.0000	0.0000	0.0000	0.0000
NBP[1]1250*	0.0000	0.0000	0.0000	0.0000	0.0000	0.0000
NBP[1]1339*	0.0000	0.0000	0.0000	0.0000	0.0000	0.0000
NBP[1]1432*	0.0000	0.0000	0.0000	0.0000	0.0000	0.0000
NBP[1]1528*	0.0000	0.0000	0.0000	0.0000	0.0000	0.0000
NBP[1]1637*	0.0000	0.0000	0.0000	0.0000	0.0000	0.0000
NBP[1]1732*	0.0000	0.0000	0.0000	0.0000	0.0000	0.0000
NBP[1]1819*	0.0000	0.0000	0.0000	0.0000	0.0000	0.0000
NBP[1]1913*	0.0000	0.0000	0.0000	0.0000	0.0000	0.0000
Total	106.6110	1.0000	46.1566	1.0000	1.9280	1.0000

Material Stream: 6

Fluid Package: Basis-1
Property Package: Peng-Robinson

CONDITIONS

		Overall	Vapour Phase	Liquid Phase	Aqueous Phase
Vapour / Phase Fraction		0.6693	0.6693	0.0591	0.2716
Temperature:	(F)	105.0 *	105.0	105.0	105.0
Pressure:	(psig)	2090	2090	2090	2090
Molar Flow	(MMSCFD)	7.874	5.270	0.4654	2.138
Mass Flow	(tonne/d)	237.5	140.6	50.84	46.11
Std Ideal Liq Vol Flow	(barrel/day)	3142	2391	460.2	290.7
Molar Enthalpy	(kJ/kgmole)	-1.527e+005	-9.272e+004	-2.243e+005	-2.849e+005

Licensed to: PETROCHEMICAL ENGINEERIN
* Specified by user.

Material Stream: 6 (continued)

Fluid Package: Basis-1
Property Package: Peng-Robinson

CONDITIONS

	Overall	Vapour Phase	Liquid Phase	Aqueous Phase
Molar Entropy (kJ/kgmole-C)	122.8	141.7	208.3	57.54
Heat Flow (MMBtu/hr)	-56.75	-23.07	-4.928	-28.76
Liq Vol Flow @Std Cond (barrel/day)	2.954e+005 *	9.328e+005	441.5	285.7

PROPERTIES

	Overall	Vapour Phase	Liquid Phase	Aqueous Phase
Molecular Weight	25.24	22.32	91.38	18.04
Molar Density (kgmole/m3)	10.34	7.952	7.690	55.46
Mass Density (kg/m3)	260.9	177.5	702.7	1000
Act. Volume Flow (barrel/day)	5728	4983	455.0	289.9
Mass Enthalpy (kJ/kg)	-6049	-4154	-2455	-1.579e+004
Mass Entropy (kJ/kg-C)	4.864	6.347	2.279	3.190
Heat Capacity (kJ/kgmole-C)	81.84	73.70	194.3	77.43
Mass Heat Capacity (kJ/kg-C)	3.243	3.302	2.127	4.293
LHV Molar Basis (Std) (Btu/SCF)	---	---	---	9.889e-004
LHV Mass Basis (Std) (kJ/kg)	---	---	---	4.839e-002
Phase Fraction [Vol. Basis]	0.7610	0.7610	0.1464	9.251e-002
Phase Fraction [Mass Basis]	0.5919	0.5919	0.2140	0.1941
Partial Pressure of CO2 (psig)	54.66	---	---	---
Cost Based on Flow (Cost/s)	0.0000	0.0000	0.0000	0.0000
Act. Gas Flow (ACT_m3/h)	33.01	33.01	---	---
Avg. Liq. Density (kgmole/m3)	18.84	16.57	7.605	55.31
Specific Heat (kJ/kgmole-C)	81.84	73.70	194.3	77.43
Std. Gas Flow (STD_m3/h)	9272	6206	548.1	2518
Std. Ideal Liq. Mass Density (kg/m3)	475.5	369.8	694.9	997.6
Act. Liq. Flow (barrel/day)	744.9	---	455.0	289.9
Z Factor	---	0.6997	0.7235	0.1003
Watson K	15.58	16.97	12.21	8.472
User Property	---	---	---	---
Partial Pressure of H2S (psig)	-14.69	---	---	---
Cp/(Cp - R)	1.113	1.127	1.045	1.120
Cp/Cv	1.435	1.919	1.280	1.152
Heat of Vap. (kJ/kgmole)	6.038e+004	---	---	---
Kinematic Viscosity (cSt)	---	0.1151	2.090	0.6444
Liq. Mass Density (Std. Cond) (kg/m3)	5.058	0.9481	724.3	1015
Liq. Vol. Flow (Std. Cond) (barrel/day)	2.954e+005	9.328e+005	441.5	285.7
Liquid Fraction	0.3307	0.0000	1.000	1.000
Molar Volume (m3/kgmole)	9.675e-002	0.1258	0.1300	1.803e-002
Mass Heat of Vap. (kJ/kg)	2392	---	---	---
Phase Fraction [Molar Basis]	0.6693	0.6693	0.0591	0.2716
Surface Tension (dyne/cm)	---	---	9.330	69.34
Thermal Conductivity (W/m-K)	---	5.521e-002	8.535e-002	0.6322
Viscosity (cP)	---	2.043e-002	1.469	0.6446
Cv (Semi-Ideal) (kJ/kgmole-C)	73.53	65.38	186.0	69.12
Mass Cv (Semi-Ideal) (kJ/kg-C)	2.913	2.929	2.036	3.832
Cv (kJ/kgmole-C)	57.05	38.40	151.9	67.19
Mass Cv (kJ/kg-C)	2.260	1.720	1.662	3.725
Cv (Ent. Method) (kJ/kgmole-C)	---	37.84	---	66.40
Mass Cv (Ent. Method) (kJ/kg-C)	---	1.695	---	3.681
Cp/Cv (Ent. Method)	---	1.947	---	1.166
Reid VP at 37.8 C (psig)	3319	2401	369.1	---
True VP at 37.8 C (psig)	6318	2875	2053	380.5
Liq. Vol. Flow - Sum(Std. Cond) (barrel/day)	9.335e+005	9.328e+005	441.5	285.7
HHV Molar Basis (Std) (Btu/SCF)	---	---	---	46.43
HHV Mass Basis (Std) (kJ/kg)	---	---	---	2272
CO2 Loading	---	---	---	---
CO2 App ML Con (kgmole/m3)	---	---	0.2248	4.588e-002

Licensed to: PETROCHEMICAL ENGINEERIN
* Specified by user.

Material Stream: 6 (continued)

Fluid Package: Basis-1
Property Package: Peng-Robinson

PROPERTIES

	Overall	Vapour Phase	Liquid Phase	Aqueous Phase
CO2 App WT Con (kgmol/kg)	---	---	3.200e-004	4.587e-005
Phase Fraction [Act. Vol. Basis]	0.8699	0.8699	7.945e-002	5.061e-002
Mass Exergy (kJ/kg)	318.7	---	---	---
Viscosity Index	-38.22	---	---	---
Ideal Gas Cp/Cv	1.212	1.234	1.058	1.328
Ideal Gas Cp (kJ/kgmole-C)	47.49	43.89	151.7	33.67
Mass Ideal Gas Cp (kJ/kg-C)	1.882	1.966	1.661	1.867
Bubble Point Pressure (psig)	6321	---	---	---

COMPOSITION

Overall Phase

Vapour Fraction 0.6693

COMPONENTS	MOLAR FLOW (kgmole/h)	MOLE FRACTION	MASS FLOW (tonne/d)	MASS FRACTION	LIQUID VOLUME FLOW (m3/h)	LIQUID VOLUME FRACTION
Methane	207.0440	0.5280	79.7181	0.3356	11.0944	0.5330
Ethane	28.8006	0.0734	20.7848	0.0875	2.4348	0.1170
Propane	15.2677	0.0389	16.1583	0.0680	1.3288	0.0638
i-Butane	2.0287	0.0052	2.8300	0.0119	0.2098	0.0101
n-Butane	3.9513	0.0101	5.5120	0.0232	0.3938	0.0189
i-Pentane	0.8495	0.0022	1.4710	0.0062	0.0983	0.0047
n-Pentane	0.9602	0.0024	1.6627	0.0070	0.1100	0.0053
n-Hexane	1.4698	0.0037	3.0399	0.0128	0.1911	0.0092
Nitrogen	5.5989	0.0143	3.7642	0.0158	0.1945	0.0093
CO2	9.4151	0.0240	9.9445	0.0419	0.5020	0.0241
H2S	0.0006	0.0000	0.0005	0.0000	0.0000	0.0000
H2O	106.6990	0.2721	46.1326	0.1942	1.9261	0.0925
NBP[1]95*	0.2883	0.0007	0.4699	0.0020	0.0288	0.0014
NBP[1]121*	0.3381	0.0009	0.5912	0.0025	0.0358	0.0017
NBP[1]147*	0.4314	0.0011	0.8304	0.0035	0.0494	0.0024
NBP[1]171*	0.8224	0.0021	1.7306	0.0073	0.1013	0.0049
NBP[1]195*	1.0758	0.0027	2.4160	0.0102	0.1398	0.0067
NBP[1]222*	0.8003	0.0020	1.9331	0.0081	0.1105	0.0053
NBP[1]248*	0.6657	0.0017	1.7287	0.0073	0.0976	0.0047
NBP[1]273*	0.5358	0.0014	1.4881	0.0063	0.0831	0.0040
NBP[1]299*	0.4185	0.0011	1.2393	0.0052	0.0684	0.0033
NBP[1]325*	0.3029	0.0008	0.9528	0.0040	0.0521	0.0025
NBP[1]351*	0.2456	0.0006	0.8214	0.0035	0.0445	0.0021
NBP[1]377*	0.2247	0.0006	0.8014	0.0034	0.0429	0.0021
NBP[1]402*	0.2061	0.0005	0.7838	0.0033	0.0416	0.0020
NBP[1]428*	0.1961	0.0005	0.7956	0.0033	0.0418	0.0020
NBP[1]454*	0.1956	0.0005	0.8480	0.0036	0.0441	0.0021
NBP[1]480*	0.1982	0.0005	0.9182	0.0039	0.0473	0.0023
NBP[1]505*	0.1920	0.0005	0.9484	0.0040	0.0484	0.0023
NBP[1]531*	0.1852	0.0005	0.9740	0.0041	0.0492	0.0024
NBP[1]557*	0.1784	0.0005	0.9978	0.0042	0.0500	0.0024
NBP[1]582*	0.1706	0.0004	1.0132	0.0043	0.0503	0.0024
NBP[1]608*	0.1643	0.0004	1.0351	0.0044	0.0510	0.0025
NBP[1]634*	0.1611	0.0004	1.0753	0.0045	0.0526	0.0025
NBP[1]659*	0.1586	0.0004	1.1194	0.0047	0.0543	0.0026
NBP[1]685*	0.1641	0.0004	1.2227	0.0051	0.0588	0.0028
NBP[1]711*	0.1715	0.0004	1.3445	0.0057	0.0642	0.0031
NBP[1]736*	0.1697	0.0004	1.3915	0.0059	0.0659	0.0032
NBP[1]762*	0.1653	0.0004	1.4214	0.0060	0.0669	0.0032
NBP[1]788*	0.1585	0.0004	1.4424	0.0061	0.0674	0.0032
NBP[1]825*	0.2655	0.0007	2.5963	0.0109	0.1201	0.0058
NBP[1]873*	0.1830	0.0005	1.9404	0.0082	0.0887	0.0043
NBP[1]926*	0.1437	0.0004	1.6472	0.0069	0.0744	0.0036

* Specified by user.

Material Stream: 6 (continued)

Fluid Package: Basis-1
Property Package: Peng-Robinson

COMPOSITION

Overall Phase (continued)

Vapour Fraction 0.6693

COMPONENTS	MOLAR FLOW (kgmole/h)	MOLE FRACTION	MASS FLOW (tonne/d)	MASS FRACTION	LIQUID VOLUME FLOW (m3/h)	LIQUID VOLUME FRACTION
NBP[1]978*	0.1474	0.0004	1.8524	0.0078	0.0825	0.0040
NBP[1]1021*	0.0728	0.0002	0.9655	0.0041	0.0426	0.0020
NBP[1]1075*	0.0449	0.0001	0.6310	0.0027	0.0276	0.0013
NBP[1]1123*	0.0417	0.0001	0.6267	0.0026	0.0271	0.0013
NBP[1]1173*	0.0300	0.0001	0.4772	0.0020	0.0205	0.0010
NBP[1]1250*	0.0393	0.0001	0.6767	0.0028	0.0287	0.0014
NBP[1]1339*	0.0364	0.0001	0.6999	0.0029	0.0291	0.0014
NBP[1]1432*	0.0257	0.0001	0.5397	0.0023	0.0221	0.0011
NBP[1]1528*	0.0180	0.0000	0.4082	0.0017	0.0165	0.0008
NBP[1]1637*	0.0127	0.0000	0.3047	0.0013	0.0122	0.0006
NBP[1]1732*	0.0101	0.0000	0.2565	0.0011	0.0101	0.0005
NBP[1]1819*	0.0097	0.0000	0.2590	0.0011	0.0101	0.0005
NBP[1]1913*	0.0112	0.0000	0.3148	0.0013	0.0121	0.0006
Total	392.1623	1.0000	237.5489	1.0000	20.8162	1.0000

Vapour Phase

Phase Fraction 0.6693

COMPONENTS	MOLAR FLOW (kgmole/h)	MOLE FRACTION	MASS FLOW (tonne/d)	MASS FRACTION	LIQUID VOLUME FLOW (m3/h)	LIQUID VOLUME FRACTION
Methane	198.5586	0.7565	76.4509	0.5437	10.6397	0.6716
Ethane	26.4727	0.1009	19.1048	0.1359	2.2380	0.1413
Propane	13.2904	0.0506	14.0656	0.1000	1.1567	0.0730
i-Butane	1.6672	0.0064	2.3257	0.0165	0.1724	0.0109
n-Butane	3.1512	0.0120	4.3958	0.0313	0.3140	0.0198
i-Pentane	0.6210	0.0024	1.0753	0.0076	0.0719	0.0045
n-Pentane	0.6756	0.0026	1.1699	0.0083	0.0774	0.0049
n-Hexane	0.8700	0.0033	1.7994	0.0128	0.1131	0.0071
Nitrogen	5.4494	0.0208	3.6637	0.0261	0.1893	0.0119
CO2	8.6492	0.0330	9.1356	0.0650	0.4612	0.0291
H2S	0.0005	0.0000	0.0004	0.0000	0.0000	0.0000
H2O	0.2615	0.0010	0.1131	0.0008	0.0047	0.0003
NBP[1]95*	0.2026	0.0008	0.3303	0.0023	0.0202	0.0013
NBP[1]121*	0.2224	0.0008	0.3889	0.0028	0.0235	0.0015
NBP[1]147*	0.2617	0.0010	0.5037	0.0036	0.0300	0.0019
NBP[1]171*	0.4563	0.0017	0.9601	0.0068	0.0562	0.0035
NBP[1]195*	0.5397	0.0021	1.2121	0.0086	0.0701	0.0044
NBP[1]222*	0.3510	0.0013	0.8477	0.0060	0.0484	0.0031
NBP[1]248*	0.2519	0.0010	0.6543	0.0047	0.0369	0.0023
NBP[1]273*	0.1719	0.0007	0.4773	0.0034	0.0266	0.0017
NBP[1]299*	0.1115	0.0004	0.3303	0.0023	0.0182	0.0012
NBP[1]325*	0.0654	0.0002	0.2057	0.0015	0.0112	0.0007
NBP[1]351*	0.0420	0.0002	0.1406	0.0010	0.0076	0.0005
NBP[1]377*	0.0296	0.0001	0.1054	0.0007	0.0056	0.0004
NBP[1]402*	0.0206	0.0001	0.0783	0.0006	0.0042	0.0003
NBP[1]428*	0.0145	0.0001	0.0590	0.0004	0.0031	0.0002
NBP[1]454*	0.0106	0.0000	0.0458	0.0003	0.0024	0.0002
NBP[1]480*	0.0077	0.0000	0.0356	0.0003	0.0018	0.0001
NBP[1]505*	0.0053	0.0000	0.0260	0.0002	0.0013	0.0001
NBP[1]531*	0.0035	0.0000	0.0185	0.0001	0.0009	0.0001
NBP[1]557*	0.0023	0.0000	0.0130	0.0001	0.0006	0.0000
NBP[1]582*	0.0015	0.0000	0.0089	0.0001	0.0004	0.0000
NBP[1]608*	0.0010	0.0000	0.0060	0.0000	0.0003	0.0000
NBP[1]634*	0.0006	0.0000	0.0041	0.0000	0.0002	0.0000
NBP[1]659*	0.0004	0.0000	0.0027	0.0000	0.0001	0.0000
NBP[1]685*	0.0003	0.0000	0.0019	0.0000	0.0001	0.0000

* Specified by user.

Material Stream: 6 (continued)

Fluid Package: Basis-1
Property Package: Peng-Robinson

COMPOSITION

Vapour Phase (continued)

Phase Fraction 0.6693

COMPONENTS	MOLAR FLOW (kgmole/h)	MOLE FRACTION	MASS FLOW (tonne/d)	MASS FRACTION	LIQUID VOLUME FLOW (m3/h)	LIQUID VOLUME FRACTION
NBP[1]711*	0.0002	0.0000	0.0013	0.0000	0.0001	0.0000
NBP[1]736*	0.0001	0.0000	0.0009	0.0000	0.0000	0.0000
NBP[1]762*	0.0001	0.0000	0.0005	0.0000	0.0000	0.0000
NBP[1]788*	0.0000	0.0000	0.0003	0.0000	0.0000	0.0000
NBP[1]825*	0.0000	0.0000	0.0003	0.0000	0.0000	0.0000
NBP[1]873*	0.0000	0.0000	0.0001	0.0000	0.0000	0.0000
NBP[1]926*	0.0000	0.0000	0.0000	0.0000	0.0000	0.0000
NBP[1]978*	0.0000	0.0000	0.0000	0.0000	0.0000	0.0000
NBP[1]1021*	0.0000	0.0000	0.0000	0.0000	0.0000	0.0000
NBP[1]1075*	0.0000	0.0000	0.0000	0.0000	0.0000	0.0000
NBP[1]1123*	0.0000	0.0000	0.0000	0.0000	0.0000	0.0000
NBP[1]1173*	0.0000	0.0000	0.0000	0.0000	0.0000	0.0000
NBP[1]1250*	0.0000	0.0000	0.0000	0.0000	0.0000	0.0000
NBP[1]1339*	0.0000	0.0000	0.0000	0.0000	0.0000	0.0000
NBP[1]1432*	0.0000	0.0000	0.0000	0.0000	0.0000	0.0000
NBP[1]1528*	0.0000	0.0000	0.0000	0.0000	0.0000	0.0000
NBP[1]1637*	0.0007	0.0000	0.0157	0.0001	0.0006	0.0000
NBP[1]1732*	0.0101	0.0000	0.2564	0.0018	0.0101	0.0006
NBP[1]1819*	0.0097	0.0000	0.2590	0.0018	0.0101	0.0006
NBP[1]1913*	0.0112	0.0000	0.3148	0.0022	0.0121	0.0008
Total	262.4735	1.0000	140.6055	1.0000	15.8421	1.0000

Liquid Phase

Phase Fraction 5.911e-002

COMPONENTS	MOLAR FLOW (kgmole/h)	MOLE FRACTION	MASS FLOW (tonne/d)	MASS FRACTION	LIQUID VOLUME FLOW (m3/h)	LIQUID VOLUME FRACTION
Methane	8.4853	0.3660	3.2671	0.0643	0.4547	0.1492
Ethane	2.3279	0.1004	1.6800	0.0330	0.1968	0.0646
Propane	1.9774	0.0853	2.0927	0.0412	0.1721	0.0565
i-Butane	0.3615	0.0156	0.5043	0.0099	0.0374	0.0123
n-Butane	0.8001	0.0345	1.1161	0.0220	0.0797	0.0262
i-Pentane	0.2285	0.0099	0.3957	0.0078	0.0264	0.0087
n-Pentane	0.2846	0.0123	0.4928	0.0097	0.0326	0.0107
n-Hexane	0.5998	0.0259	1.2406	0.0244	0.0780	0.0256
Nitrogen	0.1459	0.0063	0.0981	0.0019	0.0051	0.0017
CO2	0.6778	0.0292	0.7159	0.0141	0.0361	0.0119
H2S	0.0001	0.0000	0.0001	0.0000	0.0000	0.0000
H2O	0.0217	0.0009	0.0094	0.0002	0.0004	0.0001
NBP[1]95*	0.0856	0.0037	0.1396	0.0027	0.0086	0.0028
NBP[1]121*	0.1157	0.0050	0.2023	0.0040	0.0122	0.0040
NBP[1]147*	0.1698	0.0073	0.3267	0.0064	0.0194	0.0064
NBP[1]171*	0.3662	0.0158	0.7705	0.0152	0.0451	0.0148
NBP[1]195*	0.5360	0.0231	1.2038	0.0237	0.0697	0.0229
NBP[1]222*	0.4494	0.0194	1.0854	0.0214	0.0620	0.0204
NBP[1]248*	0.4137	0.0178	1.0745	0.0211	0.0607	0.0199
NBP[1]273*	0.3640	0.0157	1.0108	0.0199	0.0564	0.0185
NBP[1]299*	0.3070	0.0132	0.9090	0.0179	0.0502	0.0165
NBP[1]325*	0.2375	0.0102	0.7471	0.0147	0.0408	0.0134
NBP[1]351*	0.2036	0.0088	0.6809	0.0134	0.0369	0.0121
NBP[1]377*	0.1952	0.0084	0.6960	0.0137	0.0373	0.0122
NBP[1]402*	0.1855	0.0080	0.7056	0.0139	0.0374	0.0123
NBP[1]428*	0.1815	0.0078	0.7366	0.0145	0.0387	0.0127
NBP[1]454*	0.1850	0.0080	0.8022	0.0158	0.0417	0.0137
NBP[1]480*	0.1905	0.0082	0.8826	0.0174	0.0454	0.0149
NBP[1]505*	0.1867	0.0081	0.9224	0.0181	0.0470	0.0154

* Specified by user.

Material Stream: 6 (continued)

Fluid Package: Basis-1
Property Package: Peng-Robinson

COMPOSITION

Liquid Phase (continued)

Phase Fraction 5.911e-002

COMPONENTS	MOLAR FLOW (kgmole/h)	MOLE FRACTION	MASS FLOW (tonne/d)	MASS FRACTION	LIQUID VOLUME FLOW (m3/h)	LIQUID VOLUME FRACTION
NBP[1]531*	0.1817	0.0078	0.9555	0.0188	0.0483	0.0158
NBP[1]557*	0.1761	0.0076	0.9849	0.0194	0.0494	0.0162
NBP[1]582*	0.1691	0.0073	1.0043	0.0198	0.0499	0.0164
NBP[1]608*	0.1633	0.0070	1.0291	0.0202	0.0507	0.0166
NBP[1]634*	0.1605	0.0069	1.0712	0.0211	0.0524	0.0172
NBP[1]659*	0.1582	0.0068	1.1167	0.0220	0.0541	0.0178
NBP[1]685*	0.1639	0.0071	1.2208	0.0240	0.0587	0.0193
NBP[1]711*	0.1714	0.0074	1.3432	0.0264	0.0641	0.0210
NBP[1]736*	0.1696	0.0073	1.3907	0.0274	0.0659	0.0216
NBP[1]762*	0.1652	0.0071	1.4209	0.0279	0.0668	0.0219
NBP[1]788*	0.1584	0.0068	1.4420	0.0284	0.0674	0.0221
NBP[1]825*	0.2654	0.0114	2.5960	0.0511	0.1201	0.0394
NBP[1]873*	0.1830	0.0079	1.9403	0.0382	0.0887	0.0291
NBP[1]926*	0.1437	0.0062	1.6471	0.0324	0.0744	0.0244
NBP[1]978*	0.1474	0.0064	1.8524	0.0364	0.0825	0.0271
NBP[1]1021*	0.0728	0.0031	0.9655	0.0190	0.0426	0.0140
NBP[1]1075*	0.0449	0.0019	0.6310	0.0124	0.0276	0.0091
NBP[1]1123*	0.0417	0.0018	0.6267	0.0123	0.0271	0.0089
NBP[1]1173*	0.0300	0.0013	0.4772	0.0094	0.0205	0.0067
NBP[1]1250*	0.0393	0.0017	0.6767	0.0133	0.0287	0.0094
NBP[1]1339*	0.0364	0.0016	0.6999	0.0138	0.0291	0.0096
NBP[1]1432*	0.0257	0.0011	0.5397	0.0106	0.0221	0.0073
NBP[1]1528*	0.0180	0.0008	0.4082	0.0080	0.0165	0.0054
NBP[1]1637*	0.0120	0.0005	0.2890	0.0057	0.0116	0.0038
NBP[1]1732*	0.0000	0.0000	0.0001	0.0000	0.0000	0.0000
NBP[1]1819*	0.0000	0.0000	0.0000	0.0000	0.0000	0.0000
NBP[1]1913*	0.0000	0.0000	0.0000	0.0000	0.0000	0.0000
Total	23.1813	1.0000	50.8377	1.0000	3.0483	1.0000

Aqueous Phase

Phase Fraction 0.2716

COMPONENTS	MOLAR FLOW (kgmole/h)	MOLE FRACTION	MASS FLOW (tonne/d)	MASS FRACTION	LIQUID VOLUME FLOW (m3/h)	LIQUID VOLUME FRACTION
Methane	0.0001	0.0000	0.0000	0.0000	0.0000	0.0000
Ethane	0.0000	0.0000	0.0000	0.0000	0.0000	0.0000
Propane	0.0000	0.0000	0.0000	0.0000	0.0000	0.0000
i-Butane	0.0000	0.0000	0.0000	0.0000	0.0000	0.0000
n-Butane	0.0000	0.0000	0.0000	0.0000	0.0000	0.0000
i-Pentane	0.0000	0.0000	0.0000	0.0000	0.0000	0.0000
n-Pentane	0.0000	0.0000	0.0000	0.0000	0.0000	0.0000
n-Hexane	0.0000	0.0000	0.0000	0.0000	0.0000	0.0000
Nitrogen	0.0035	0.0000	0.0024	0.0001	0.0001	0.0001
CO2	0.0881	0.0008	0.0931	0.0020	0.0047	0.0024
H2S	0.0000	0.0000	0.0000	0.0000	0.0000	0.0000
H2O	106.4157	0.9991	46.0102	0.9979	1.9210	0.9975
NBP[1]95*	0.0000	0.0000	0.0000	0.0000	0.0000	0.0000
NBP[1]121*	0.0000	0.0000	0.0000	0.0000	0.0000	0.0000
NBP[1]147*	0.0000	0.0000	0.0000	0.0000	0.0000	0.0000
NBP[1]171*	0.0000	0.0000	0.0000	0.0000	0.0000	0.0000
NBP[1]195*	0.0000	0.0000	0.0000	0.0000	0.0000	0.0000
NBP[1]222*	0.0000	0.0000	0.0000	0.0000	0.0000	0.0000
NBP[1]248*	0.0000	0.0000	0.0000	0.0000	0.0000	0.0000
NBP[1]273*	0.0000	0.0000	0.0000	0.0000	0.0000	0.0000
NBP[1]299*	0.0000	0.0000	0.0000	0.0000	0.0000	0.0000
NBP[1]325*	0.0000	0.0000	0.0000	0.0000	0.0000	0.0000

* Specified by user.

Material Stream: 6 (continued)

Fluid Package: Basis-1
Property Package: Peng-Robinson

COMPOSITION

Aqueous Phase (continued)

Phase Fraction 0.2716

COMPONENTS	MOLAR FLOW (kgmole/h)	MOLE FRACTION	MASS FLOW (tonne/d)	MASS FRACTION	LIQUID VOLUME FLOW (m3/h)	LIQUID VOLUME FRACTION
NBP[1]351*	0.0000	0.0000	0.0000	0.0000	0.0000	0.0000
NBP[1]377*	0.0000	0.0000	0.0000	0.0000	0.0000	0.0000
NBP[1]402*	0.0000	0.0000	0.0000	0.0000	0.0000	0.0000
NBP[1]428*	0.0000	0.0000	0.0000	0.0000	0.0000	0.0000
NBP[1]454*	0.0000	0.0000	0.0000	0.0000	0.0000	0.0000
NBP[1]480*	0.0000	0.0000	0.0000	0.0000	0.0000	0.0000
NBP[1]505*	0.0000	0.0000	0.0000	0.0000	0.0000	0.0000
NBP[1]531*	0.0000	0.0000	0.0000	0.0000	0.0000	0.0000
NBP[1]557*	0.0000	0.0000	0.0000	0.0000	0.0000	0.0000
NBP[1]582*	0.0000	0.0000	0.0000	0.0000	0.0000	0.0000
NBP[1]608*	0.0000	0.0000	0.0000	0.0000	0.0000	0.0000
NBP[1]634*	0.0000	0.0000	0.0000	0.0000	0.0000	0.0000
NBP[1]659*	0.0000	0.0000	0.0000	0.0000	0.0000	0.0000
NBP[1]685*	0.0000	0.0000	0.0000	0.0000	0.0000	0.0000
NBP[1]711*	0.0000	0.0000	0.0000	0.0000	0.0000	0.0000
NBP[1]736*	0.0000	0.0000	0.0000	0.0000	0.0000	0.0000
NBP[1]762*	0.0000	0.0000	0.0000	0.0000	0.0000	0.0000
NBP[1]788*	0.0000	0.0000	0.0000	0.0000	0.0000	0.0000
NBP[1]825*	0.0000	0.0000	0.0000	0.0000	0.0000	0.0000
NBP[1]873*	0.0000	0.0000	0.0000	0.0000	0.0000	0.0000
NBP[1]926*	0.0000	0.0000	0.0000	0.0000	0.0000	0.0000
NBP[1]978*	0.0000	0.0000	0.0000	0.0000	0.0000	0.0000
NBP[1]1021*	0.0000	0.0000	0.0000	0.0000	0.0000	0.0000
NBP[1]1075*	0.0000	0.0000	0.0000	0.0000	0.0000	0.0000
NBP[1]1123*	0.0000	0.0000	0.0000	0.0000	0.0000	0.0000
NBP[1]1173*	0.0000	0.0000	0.0000	0.0000	0.0000	0.0000
NBP[1]1250*	0.0000	0.0000	0.0000	0.0000	0.0000	0.0000
NBP[1]1339*	0.0000	0.0000	0.0000	0.0000	0.0000	0.0000
NBP[1]1432*	0.0000	0.0000	0.0000	0.0000	0.0000	0.0000
NBP[1]1528*	0.0000	0.0000	0.0000	0.0000	0.0000	0.0000
NBP[1]1637*	0.0000	0.0000	0.0000	0.0000	0.0000	0.0000
NBP[1]1732*	0.0000	0.0000	0.0000	0.0000	0.0000	0.0000
NBP[1]1819*	0.0000	0.0000	0.0000	0.0000	0.0000	0.0000
NBP[1]1913*	0.0000	0.0000	0.0000	0.0000	0.0000	0.0000
Total	106.5074	1.0000	46.1056	1.0000	1.9258	1.0000

Material Stream: 7

Fluid Package: Basis-1
Property Package: Peng-Robinson

CONDITIONS

		Overall	Vapour Phase	Liquid Phase	Aqueous Phase
Vapour / Phase Fraction		0.6603	0.6603	0.0680	0.2717
Temperature:	(F)	94.31	94.31	94.31	94.31
Pressure:	(psig)	1550 *	1550	1550	1550
Molar Flow	(MMSCFD)	7.874	5.199	0.5353	2.139
Mass Flow	(tonne/d)	237.5	134.6	56.87	46.12
Std Ideal Liq Vol Flow	(barrel/day)	3142	2331	520.4	290.8
Molar Enthalpy	(kJ/kgmole)	-1.527e+005	-9.124e+004	-2.191e+005	-2.854e+005
Molar Entropy	(kJ/kgmole-C)	124.1	145.0	193.1	56.11
Heat Flow	(MMBtu/hr)	-56.75	-22.39	-5.536	-28.82
Liq Vol Flow @Std Cond	(barrel/day)	2.954e+005 *	9.205e+005	498.9	285.8

* Specified by user.

Material Stream: 7 (continued)

Fluid Package: Basis-1
Property Package: Peng-Robinson

PROPERTIES

	Overall	Vapour Phase	Liquid Phase	Aqueous Phase
Molecular Weight	25.24	21.65	88.88	18.04
Molar Density (kgmole/m3)	7.900	5.841	7.849	55.65
Mass Density (kg/m3)	199.4	126.5	697.6	1004
Act. Volume Flow (barrel/day)	7494	6692	512.7	289.0
Mass Enthalpy (kJ/kg)	-6049	-4214	-2465	-1.582e+004
Mass Entropy (kJ/kg-C)	4.917	6.696	2.173	3.111
Heat Capacity (kJ/kgmole-C)	78.33	67.35	188.4	77.49
Mass Heat Capacity (kJ/kg-C)	3.104	3.111	2.119	4.297
LHV Molar Basis (Std) (Btu/SCF)	---	---	---	6.011e-004
LHV Mass Basis (Std) (kJ/kg)	---	---	---	2.941e-002
Phase Fraction [Vol. Basis]	0.7419	0.7419	0.1656	9.254e-002
Phase Fraction [Mass Basis]	0.5664	0.5664	0.2394	0.1942
Partial Pressure of CO2 (psig)	37.22	---	---	---
Cost Based on Flow (Cost/s)	0.0000	0.0000	0.0000	0.0000
Act. Gas Flow (ACT_m3/h)	44.33	44.33	---	---
Avg. Liq. Density (kgmole/m3)	18.84	16.77	7.734	55.31
Specific Heat (kJ/kgmole-C)	78.33	67.35	188.4	77.49
Std. Gas Flow (STD_m3/h)	9272	6123	630.3	2519
Std. Ideal Liq. Mass Density (kg/m3)	475.5	363.1	687.4	997.6
Act. Liq. Flow (barrel/day)	801.8	---	512.7	289.0
Z Factor	---	0.7215	0.5370	7.574e-002
Watson K	15.58	17.17	12.30	8.481
User Property	---	---	---	---
Partial Pressure of H2S (psig)	-14.69	---	---	---
Cp/(Cp - R)	1.119	1.141	1.046	1.120
Cp/Cv	1.375	1.857	1.298	1.151
Heat of Vap. (kJ/kgmole)	6.253e+004	---	---	---
Kinematic Viscosity (cSt)	---	0.1301	2.102	0.7215
Liq. Mass Density (Std. Cond) (kg/m3)	5.058	0.9194	717.0	1015
Liq. Vol. Flow (Std. Cond) (barrel/day)	2.954e+005	9.205e+005	498.9	285.8
Liquid Fraction	0.3397	0.0000	1.000	1.000
Molar Volume (m3/kgmole)	0.1266	0.1712	0.1274	1.797e-002
Mass Heat of Vap. (kJ/kg)	2477	---	---	---
Phase Fraction [Molar Basis]	0.6603	0.6603	0.0680	0.2717
Surface Tension (dyne/cm)	---	---	9.984	70.37
Thermal Conductivity (W/m-K)	---	4.597e-002	8.703e-002	0.6246
Viscosity (cP)	---	1.646e-002	1.466	0.7241
Cv (Semi-Ideal) (kJ/kgmole-C)	70.02	59.04	180.1	69.18
Mass Cv (Semi-Ideal) (kJ/kg-C)	2.774	2.727	2.026	3.836
Cv (kJ/kgmole-C)	56.96	36.26	145.1	67.34
Mass Cv (kJ/kg-C)	2.257	1.675	1.633	3.734
Cv (Ent. Method) (kJ/kgmole-C)	---	---	156.1	66.60
Mass Cv (Ent. Method) (kJ/kg-C)	---	---	1.756	3.692
Cp/Cv (Ent. Method)	---	---	1.207	1.164
Reid VP at 37.8 C (psig)	3319	---	328.3	---
True VP at 37.8 C (psig)	6318	2967	1584	132.7
Liq. Vol. Flow - Sum(Std. Cond) (barrel/day)	9.213e+005	9.205e+005	498.9	285.8
HHV Molar Basis (Std) (Btu/SCF)	---	---	---	46.43
HHV Mass Basis (Std) (kJ/kg)	---	---	---	2272
CO2 Loading	---	---	---	---
CO2 App ML Con (kgmole/m3)	---	---	0.2164	4.453e-002
CO2 App WT Con (kgmol/kg)	---	---	3.102e-004	4.437e-005
Phase Fraction [Act. Vol. Basis]	0.8930	0.8930	6.842e-002	3.857e-002
Mass Exergy (kJ/kg)	302.9	---	---	---
Viscosity Index	-32.07	---	---	---
Ideal Gas Cp/Cv	1.215	1.243	1.061	1.328
Ideal Gas Cp (kJ/kgmole-C)	47.08	42.49	145.4	33.63

* Specified by user.

Material Stream: 7 (continued)

Fluid Package: Basis-1
Property Package: Peng-Robinson

PROPERTIES

	Overall	Vapour Phase	Liquid Phase	Aqueous Phase
Mass Ideal Gas Cp (kJ/kg-C)	1.865	1.962	1.635	1.865
Bubble Point Pressure (psig)	6269	---	---	---

COMPOSITION

Overall Phase

Vapour Fraction 0.6603

COMPONENTS	MOLAR FLOW (kgmole/h)	MOLE FRACTION	MASS FLOW (tonne/d)	MASS FRACTION	LIQUID VOLUME FLOW (m3/h)	LIQUID VOLUME FRACTION
Methane	207.0440	0.5280	79.7181	0.3356	11.0944	0.5330
Ethane	28.8006	0.0734	20.7848	0.0875	2.4348	0.1170
Propane	15.2677	0.0389	16.1583	0.0680	1.3288	0.0638
i-Butane	2.0287	0.0052	2.8300	0.0119	0.2098	0.0101
n-Butane	3.9513	0.0101	5.5120	0.0232	0.3938	0.0189
i-Pentane	0.8495	0.0022	1.4710	0.0062	0.0983	0.0047
n-Pentane	0.9602	0.0024	1.6627	0.0070	0.1100	0.0053
n-Hexane	1.4698	0.0037	3.0399	0.0128	0.1911	0.0092
Nitrogen	5.5989	0.0143	3.7642	0.0158	0.1945	0.0093
CO2	9.4151	0.0240	9.9445	0.0419	0.5020	0.0241
H2S	0.0006	0.0000	0.0005	0.0000	0.0000	0.0000
H2O	106.6990	0.2721	46.1326	0.1942	1.9261	0.0925
NBP[1]95*	0.2883	0.0007	0.4699	0.0020	0.0288	0.0014
NBP[1]121*	0.3381	0.0009	0.5912	0.0025	0.0358	0.0017
NBP[1]147*	0.4314	0.0011	0.8304	0.0035	0.0494	0.0024
NBP[1]171*	0.8224	0.0021	1.7306	0.0073	0.1013	0.0049
NBP[1]195*	1.0758	0.0027	2.4160	0.0102	0.1398	0.0067
NBP[1]222*	0.8003	0.0020	1.9331	0.0081	0.1105	0.0053
NBP[1]248*	0.6657	0.0017	1.7287	0.0073	0.0976	0.0047
NBP[1]273*	0.5358	0.0014	1.4881	0.0063	0.0831	0.0040
NBP[1]299*	0.4185	0.0011	1.2393	0.0052	0.0684	0.0033
NBP[1]325*	0.3029	0.0008	0.9528	0.0040	0.0521	0.0025
NBP[1]351*	0.2456	0.0006	0.8214	0.0035	0.0445	0.0021
NBP[1]377*	0.2247	0.0006	0.8014	0.0034	0.0429	0.0021
NBP[1]402*	0.2061	0.0005	0.7838	0.0033	0.0416	0.0020
NBP[1]428*	0.1961	0.0005	0.7956	0.0033	0.0418	0.0020
NBP[1]454*	0.1956	0.0005	0.8480	0.0036	0.0441	0.0021
NBP[1]480*	0.1982	0.0005	0.9182	0.0039	0.0473	0.0023
NBP[1]505*	0.1920	0.0005	0.9484	0.0040	0.0484	0.0023
NBP[1]531*	0.1852	0.0005	0.9740	0.0041	0.0492	0.0024
NBP[1]557*	0.1784	0.0005	0.9978	0.0042	0.0500	0.0024
NBP[1]582*	0.1706	0.0004	1.0132	0.0043	0.0503	0.0024
NBP[1]608*	0.1643	0.0004	1.0351	0.0044	0.0510	0.0025
NBP[1]634*	0.1611	0.0004	1.0753	0.0045	0.0526	0.0025
NBP[1]659*	0.1586	0.0004	1.1194	0.0047	0.0543	0.0026
NBP[1]685*	0.1641	0.0004	1.2227	0.0051	0.0588	0.0028
NBP[1]711*	0.1715	0.0004	1.3445	0.0057	0.0642	0.0031
NBP[1]736*	0.1697	0.0004	1.3915	0.0059	0.0659	0.0032
NBP[1]762*	0.1653	0.0004	1.4214	0.0060	0.0669	0.0032
NBP[1]788*	0.1585	0.0004	1.4424	0.0061	0.0674	0.0032
NBP[1]825*	0.2655	0.0007	2.5963	0.0109	0.1201	0.0058
NBP[1]873*	0.1830	0.0005	1.9404	0.0082	0.0887	0.0043
NBP[1]926*	0.1437	0.0004	1.6472	0.0069	0.0744	0.0036
NBP[1]978*	0.1474	0.0004	1.8524	0.0078	0.0825	0.0040
NBP[1]1021*	0.0728	0.0002	0.9655	0.0041	0.0426	0.0020
NBP[1]1075*	0.0449	0.0001	0.6310	0.0027	0.0276	0.0013
NBP[1]1123*	0.0417	0.0001	0.6267	0.0026	0.0271	0.0013
NBP[1]1173*	0.0300	0.0001	0.4772	0.0020	0.0205	0.0010
NBP[1]1250*	0.0393	0.0001	0.6767	0.0028	0.0287	0.0014

* Specified by user.

Material Stream: 7 (continued)

Fluid Package: Basis-1
Property Package: Peng-Robinson

COMPOSITION

Overall Phase (continued)

Vapour Fraction 0.6603

COMPONENTS	MOLAR FLOW (kgmole/h)	MOLE FRACTION	MASS FLOW (tonne/d)	MASS FRACTION	LIQUID VOLUME FLOW (m3/h)	LIQUID VOLUME FRACTION
NBP[1]1339*	0.0364	0.0001	0.6999	0.0029	0.0291	0.0014
NBP[1]1432*	0.0257	0.0001	0.5397	0.0023	0.0221	0.0011
NBP[1]1528*	0.0180	0.0000	0.4082	0.0017	0.0165	0.0008
NBP[1]1637*	0.0127	0.0000	0.3047	0.0013	0.0122	0.0006
NBP[1]1732*	0.0101	0.0000	0.2565	0.0011	0.0101	0.0005
NBP[1]1819*	0.0097	0.0000	0.2590	0.0011	0.0101	0.0005
NBP[1]1913*	0.0112	0.0000	0.3148	0.0013	0.0121	0.0006
Total	392.1623	1.0000	237.5489	1.0000	20.8162	1.0000

Vapour Phase

Phase Fraction 0.6603

COMPONENTS	MOLAR FLOW (kgmole/h)	MOLE FRACTION	MASS FLOW (tonne/d)	MASS FRACTION	LIQUID VOLUME FLOW (m3/h)	LIQUID VOLUME FRACTION
Methane	198.6527	0.7671	76.4872	0.5684	10.6447	0.6893
Ethane	25.9992	0.1004	18.7630	0.1394	2.1980	0.1423
Propane	12.5726	0.0486	13.3059	0.0989	1.0942	0.0709
i-Butane	1.5010	0.0058	2.0938	0.0156	0.1552	0.0101
n-Butane	2.7651	0.0107	3.8572	0.0287	0.2756	0.0178
i-Pentane	0.4998	0.0019	0.8655	0.0064	0.0578	0.0037
n-Pentane	0.5250	0.0020	0.9091	0.0068	0.0602	0.0039
n-Hexane	0.5718	0.0022	1.1826	0.0088	0.0744	0.0048
Nitrogen	5.4701	0.0211	3.6776	0.0273	0.1900	0.0123
CO2	8.5949	0.0332	9.0782	0.0675	0.4583	0.0297
H2S	0.0005	0.0000	0.0004	0.0000	0.0000	0.0000
H2O	0.2176	0.0008	0.0941	0.0007	0.0039	0.0003
NBP[1]95*	0.1581	0.0006	0.2577	0.0019	0.0158	0.0010
NBP[1]121*	0.1627	0.0006	0.2845	0.0021	0.0172	0.0011
NBP[1]147*	0.1773	0.0007	0.3413	0.0025	0.0203	0.0013
NBP[1]171*	0.2852	0.0011	0.6001	0.0045	0.0351	0.0023
NBP[1]195*	0.3090	0.0012	0.6940	0.0052	0.0402	0.0026
NBP[1]222*	0.1798	0.0007	0.4343	0.0032	0.0248	0.0016
NBP[1]248*	0.1155	0.0004	0.3000	0.0022	0.0169	0.0011
NBP[1]273*	0.0703	0.0003	0.1953	0.0015	0.0109	0.0007
NBP[1]299*	0.0407	0.0002	0.1204	0.0009	0.0066	0.0004
NBP[1]325*	0.0212	0.0001	0.0666	0.0005	0.0036	0.0002
NBP[1]351*	0.0121	0.0000	0.0404	0.0003	0.0022	0.0001
NBP[1]377*	0.0075	0.0000	0.0269	0.0002	0.0014	0.0001
NBP[1]402*	0.0047	0.0000	0.0178	0.0001	0.0009	0.0001
NBP[1]428*	0.0029	0.0000	0.0119	0.0001	0.0006	0.0000
NBP[1]454*	0.0019	0.0000	0.0083	0.0001	0.0004	0.0000
NBP[1]480*	0.0012	0.0000	0.0058	0.0000	0.0003	0.0000
NBP[1]505*	0.0008	0.0000	0.0038	0.0000	0.0002	0.0000
NBP[1]531*	0.0005	0.0000	0.0024	0.0000	0.0001	0.0000
NBP[1]557*	0.0003	0.0000	0.0015	0.0000	0.0001	0.0000
NBP[1]582*	0.0002	0.0000	0.0009	0.0000	0.0000	0.0000
NBP[1]608*	0.0001	0.0000	0.0005	0.0000	0.0000	0.0000
NBP[1]634*	0.0000	0.0000	0.0003	0.0000	0.0000	0.0000
NBP[1]659*	0.0000	0.0000	0.0002	0.0000	0.0000	0.0000
NBP[1]685*	0.0000	0.0000	0.0001	0.0000	0.0000	0.0000
NBP[1]711*	0.0000	0.0000	0.0001	0.0000	0.0000	0.0000
NBP[1]736*	0.0000	0.0000	0.0000	0.0000	0.0000	0.0000
NBP[1]762*	0.0000	0.0000	0.0000	0.0000	0.0000	0.0000
NBP[1]788*	0.0000	0.0000	0.0000	0.0000	0.0000	0.0000
NBP[1]825*	0.0000	0.0000	0.0000	0.0000	0.0000	0.0000
NBP[1]873*	0.0000	0.0000	0.0000	0.0000	0.0000	0.0000

* Specified by user.

Material Stream: 7 (continued)

Fluid Package: Basis-1
Property Package: Peng-Robinson

COMPOSITION

Vapour Phase (continued)

Phase Fraction 0.6603

COMPONENTS	MOLAR FLOW (kgmole/h)	MOLE FRACTION	MASS FLOW (tonne/d)	MASS FRACTION	LIQUID VOLUME FLOW (m3/h)	LIQUID VOLUME FRACTION
NBP[1]926*	0.0000	0.0000	0.0000	0.0000	0.0000	0.0000
NBP[1]978*	0.0000	0.0000	0.0000	0.0000	0.0000	0.0000
NBP[1]1021*	0.0000	0.0000	0.0000	0.0000	0.0000	0.0000
NBP[1]1075*	0.0000	0.0000	0.0000	0.0000	0.0000	0.0000
NBP[1]1123*	0.0000	0.0000	0.0000	0.0000	0.0000	0.0000
NBP[1]1173*	0.0000	0.0000	0.0000	0.0000	0.0000	0.0000
NBP[1]1250*	0.0000	0.0000	0.0000	0.0000	0.0000	0.0000
NBP[1]1339*	0.0000	0.0000	0.0000	0.0000	0.0000	0.0000
NBP[1]1432*	0.0000	0.0000	0.0000	0.0000	0.0000	0.0000
NBP[1]1528*	0.0000	0.0000	0.0000	0.0000	0.0000	0.0000
NBP[1]1637*	0.0000	0.0000	0.0001	0.0000	0.0000	0.0000
NBP[1]1732*	0.0101	0.0000	0.2552	0.0019	0.0101	0.0007
NBP[1]1819*	0.0097	0.0000	0.2590	0.0019	0.0101	0.0007
NBP[1]1913*	0.0112	0.0000	0.3148	0.0023	0.0121	0.0008
Total	258.9532	1.0000	134.5588	1.0000	15.4427	1.0000

Liquid Phase

Phase Fraction 6.798e-002

COMPONENTS	MOLAR FLOW (kgmole/h)	MOLE FRACTION	MASS FLOW (tonne/d)	MASS FRACTION	LIQUID VOLUME FLOW (m3/h)	LIQUID VOLUME FRACTION
Methane	8.3912	0.3148	3.2309	0.0568	0.4496	0.1304
Ethane	2.8014	0.1051	2.0217	0.0356	0.2368	0.0687
Propane	2.6951	0.1011	2.8523	0.0502	0.2346	0.0680
i-Butane	0.5277	0.0198	0.7362	0.0129	0.0546	0.0158
n-Butane	1.1862	0.0445	1.6547	0.0291	0.1182	0.0343
i-Pentane	0.3497	0.0131	0.6055	0.0106	0.0405	0.0117
n-Pentane	0.4352	0.0163	0.7536	0.0133	0.0499	0.0145
n-Hexane	0.8980	0.0337	1.8573	0.0327	0.1168	0.0339
Nitrogen	0.1259	0.0047	0.0847	0.0015	0.0044	0.0013
CO2	0.7350	0.0276	0.7763	0.0137	0.0392	0.0114
H2S	0.0001	0.0000	0.0001	0.0000	0.0000	0.0000
H2O	0.0198	0.0007	0.0086	0.0002	0.0004	0.0001
NBP[1]95*	0.1302	0.0049	0.2123	0.0037	0.0130	0.0038
NBP[1]121*	0.1754	0.0066	0.3067	0.0054	0.0186	0.0054
NBP[1]147*	0.2541	0.0095	0.4892	0.0086	0.0291	0.0084
NBP[1]171*	0.5373	0.0202	1.1305	0.0199	0.0662	0.0192
NBP[1]195*	0.7668	0.0288	1.7220	0.0303	0.0996	0.0289
NBP[1]222*	0.6205	0.0233	1.4987	0.0264	0.0857	0.0249
NBP[1]248*	0.5502	0.0206	1.4288	0.0251	0.0807	0.0234
NBP[1]273*	0.4655	0.0175	1.2928	0.0227	0.0722	0.0209
NBP[1]299*	0.3779	0.0142	1.1189	0.0197	0.0618	0.0179
NBP[1]325*	0.2817	0.0106	0.8862	0.0156	0.0485	0.0141
NBP[1]351*	0.2335	0.0088	0.7810	0.0137	0.0423	0.0123
NBP[1]377*	0.2172	0.0081	0.7745	0.0136	0.0415	0.0120
NBP[1]402*	0.2014	0.0076	0.7661	0.0135	0.0406	0.0118
NBP[1]428*	0.1931	0.0072	0.7836	0.0138	0.0412	0.0119
NBP[1]454*	0.1937	0.0073	0.8397	0.0148	0.0437	0.0127
NBP[1]480*	0.1969	0.0074	0.9124	0.0160	0.0470	0.0136
NBP[1]505*	0.1912	0.0072	0.9446	0.0166	0.0482	0.0140
NBP[1]531*	0.1848	0.0069	0.9716	0.0171	0.0491	0.0142
NBP[1]557*	0.1781	0.0067	0.9963	0.0175	0.0499	0.0145
NBP[1]582*	0.1704	0.0064	1.0123	0.0178	0.0503	0.0146
NBP[1]608*	0.1642	0.0062	1.0345	0.0182	0.0510	0.0148
NBP[1]634*	0.1610	0.0060	1.0750	0.0189	0.0525	0.0152
NBP[1]659*	0.1586	0.0059	1.1192	0.0197	0.0543	0.0157

* Specified by user.

Material Stream: 7 (continued)

Fluid Package: Basis-1
Property Package: Peng-Robinson

COMPOSITION

Liquid Phase (continued)

Phase Fraction 6.798e-002

COMPONENTS	MOLAR FLOW (kgmole/h)	MOLE FRACTION	MASS FLOW (tonne/d)	MASS FRACTION	LIQUID VOLUME FLOW (m3/h)	LIQUID VOLUME FRACTION
NBP[1]685*	0.1641	0.0062	1.2226	0.0215	0.0588	0.0171
NBP[1]711*	0.1715	0.0064	1.3444	0.0236	0.0642	0.0186
NBP[1]736*	0.1697	0.0064	1.3915	0.0245	0.0659	0.0191
NBP[1]762*	0.1653	0.0062	1.4214	0.0250	0.0669	0.0194
NBP[1]788*	0.1585	0.0059	1.4424	0.0254	0.0674	0.0195
NBP[1]825*	0.2655	0.0100	2.5963	0.0457	0.1201	0.0348
NBP[1]873*	0.1830	0.0069	1.9404	0.0341	0.0887	0.0257
NBP[1]926*	0.1437	0.0054	1.6472	0.0290	0.0744	0.0216
NBP[1]978*	0.1474	0.0055	1.8524	0.0326	0.0825	0.0239
NBP[1]1021*	0.0728	0.0027	0.9655	0.0170	0.0426	0.0124
NBP[1]1075*	0.0449	0.0017	0.6310	0.0111	0.0276	0.0080
NBP[1]1123*	0.0417	0.0016	0.6267	0.0110	0.0271	0.0079
NBP[1]1173*	0.0300	0.0011	0.4772	0.0084	0.0205	0.0059
NBP[1]1250*	0.0393	0.0015	0.6767	0.0119	0.0287	0.0083
NBP[1]1339*	0.0364	0.0014	0.6999	0.0123	0.0291	0.0085
NBP[1]1432*	0.0257	0.0010	0.5397	0.0095	0.0221	0.0064
NBP[1]1528*	0.0180	0.0007	0.4082	0.0072	0.0165	0.0048
NBP[1]1637*	0.0126	0.0005	0.3045	0.0054	0.0122	0.0035
NBP[1]1732*	0.0001	0.0000	0.0013	0.0000	0.0001	0.0000
NBP[1]1819*	0.0000	0.0000	0.0000	0.0000	0.0000	0.0000
NBP[1]1913*	0.0000	0.0000	0.0000	0.0000	0.0000	0.0000
Total	26.6595	1.0000	56.8682	1.0000	3.4471	1.0000

Aqueous Phase

Phase Fraction 0.2717

COMPONENTS	MOLAR FLOW (kgmole/h)	MOLE FRACTION	MASS FLOW (tonne/d)	MASS FRACTION	LIQUID VOLUME FLOW (m3/h)	LIQUID VOLUME FRACTION
Methane	0.0001	0.0000	0.0000	0.0000	0.0000	0.0000
Ethane	0.0000	0.0000	0.0000	0.0000	0.0000	0.0000
Propane	0.0000	0.0000	0.0000	0.0000	0.0000	0.0000
i-Butane	0.0000	0.0000	0.0000	0.0000	0.0000	0.0000
n-Butane	0.0000	0.0000	0.0000	0.0000	0.0000	0.0000
i-Pentane	0.0000	0.0000	0.0000	0.0000	0.0000	0.0000
n-Pentane	0.0000	0.0000	0.0000	0.0000	0.0000	0.0000
n-Hexane	0.0000	0.0000	0.0000	0.0000	0.0000	0.0000
Nitrogen	0.0028	0.0000	0.0019	0.0000	0.0001	0.0000
CO2	0.0853	0.0008	0.0901	0.0020	0.0045	0.0024
H2S	0.0000	0.0000	0.0000	0.0000	0.0000	0.0000
H2O	106.4615	0.9992	46.0300	0.9980	1.9218	0.9976
NBP[1]95*	0.0000	0.0000	0.0000	0.0000	0.0000	0.0000
NBP[1]121*	0.0000	0.0000	0.0000	0.0000	0.0000	0.0000
NBP[1]147*	0.0000	0.0000	0.0000	0.0000	0.0000	0.0000
NBP[1]171*	0.0000	0.0000	0.0000	0.0000	0.0000	0.0000
NBP[1]195*	0.0000	0.0000	0.0000	0.0000	0.0000	0.0000
NBP[1]222*	0.0000	0.0000	0.0000	0.0000	0.0000	0.0000
NBP[1]248*	0.0000	0.0000	0.0000	0.0000	0.0000	0.0000
NBP[1]273*	0.0000	0.0000	0.0000	0.0000	0.0000	0.0000
NBP[1]299*	0.0000	0.0000	0.0000	0.0000	0.0000	0.0000
NBP[1]325*	0.0000	0.0000	0.0000	0.0000	0.0000	0.0000
NBP[1]351*	0.0000	0.0000	0.0000	0.0000	0.0000	0.0000
NBP[1]377*	0.0000	0.0000	0.0000	0.0000	0.0000	0.0000
NBP[1]402*	0.0000	0.0000	0.0000	0.0000	0.0000	0.0000
NBP[1]428*	0.0000	0.0000	0.0000	0.0000	0.0000	0.0000
NBP[1]454*	0.0000	0.0000	0.0000	0.0000	0.0000	0.0000
NBP[1]480*	0.0000	0.0000	0.0000	0.0000	0.0000	0.0000

* Specified by user.

Material Stream: 7 (continued)

Fluid Package: Basis-1
Property Package: Peng-Robinson

COMPOSITION

Aqueous Phase (continued)

Phase Fraction 0.2717

COMPONENTS	MOLAR FLOW (kgmole/h)	MOLE FRACTION	MASS FLOW (tonne/d)	MASS FRACTION	LIQUID VOLUME FLOW (m3/h)	LIQUID VOLUME FRACTION
NBP[1]505*	0.0000	0.0000	0.0000	0.0000	0.0000	0.0000
NBP[1]531*	0.0000	0.0000	0.0000	0.0000	0.0000	0.0000
NBP[1]557*	0.0000	0.0000	0.0000	0.0000	0.0000	0.0000
NBP[1]582*	0.0000	0.0000	0.0000	0.0000	0.0000	0.0000
NBP[1]608*	0.0000	0.0000	0.0000	0.0000	0.0000	0.0000
NBP[1]634*	0.0000	0.0000	0.0000	0.0000	0.0000	0.0000
NBP[1]659*	0.0000	0.0000	0.0000	0.0000	0.0000	0.0000
NBP[1]685*	0.0000	0.0000	0.0000	0.0000	0.0000	0.0000
NBP[1]711*	0.0000	0.0000	0.0000	0.0000	0.0000	0.0000
NBP[1]736*	0.0000	0.0000	0.0000	0.0000	0.0000	0.0000
NBP[1]762*	0.0000	0.0000	0.0000	0.0000	0.0000	0.0000
NBP[1]788*	0.0000	0.0000	0.0000	0.0000	0.0000	0.0000
NBP[1]825*	0.0000	0.0000	0.0000	0.0000	0.0000	0.0000
NBP[1]873*	0.0000	0.0000	0.0000	0.0000	0.0000	0.0000
NBP[1]926*	0.0000	0.0000	0.0000	0.0000	0.0000	0.0000
NBP[1]978*	0.0000	0.0000	0.0000	0.0000	0.0000	0.0000
NBP[1]1021*	0.0000	0.0000	0.0000	0.0000	0.0000	0.0000
NBP[1]1075*	0.0000	0.0000	0.0000	0.0000	0.0000	0.0000
NBP[1]1123*	0.0000	0.0000	0.0000	0.0000	0.0000	0.0000
NBP[1]1173*	0.0000	0.0000	0.0000	0.0000	0.0000	0.0000
NBP[1]1250*	0.0000	0.0000	0.0000	0.0000	0.0000	0.0000
NBP[1]1339*	0.0000	0.0000	0.0000	0.0000	0.0000	0.0000
NBP[1]1432*	0.0000	0.0000	0.0000	0.0000	0.0000	0.0000
NBP[1]1528*	0.0000	0.0000	0.0000	0.0000	0.0000	0.0000
NBP[1]1637*	0.0000	0.0000	0.0000	0.0000	0.0000	0.0000
NBP[1]1732*	0.0000	0.0000	0.0000	0.0000	0.0000	0.0000
NBP[1]1819*	0.0000	0.0000	0.0000	0.0000	0.0000	0.0000
NBP[1]1913*	0.0000	0.0000	0.0000	0.0000	0.0000	0.0000
Total	106.5496	1.0000	46.1219	1.0000	1.9264	1.0000

Material Stream: 8

Fluid Package: Basis-1
Property Package: Peng-Robinson

CONDITIONS

		Overall	Vapour Phase	Liquid Phase	Aqueous Phase
Vapour / Phase Fraction		0.6816	0.6816	0.0482	0.2702
Temperature:	(F)	135.0 *	135.0	135.0	135.0
Pressure:	(psig)	1240	1240	1240	1240
Molar Flow	(MMSCFD)	7.874	5.366	0.3797	2.128
Mass Flow	(tonne/d)	237.5	140.7	51.01	45.85
Std Ideal Liq Vol Flow	(barrel/day)	3142	2417	436.6	289.1
Molar Enthalpy	(kJ/kgmole)	-1.505e+005	-9.013e+004	-2.577e+005	-2.836e+005
Molar Entropy	(kJ/kgmole-C)	132.0	152.4	238.0	61.61
Heat Flow	(MMBtu/hr)	-55.94	-22.83	-4.620	-28.49
Liq Vol Flow @Std Cond	(barrel/day)	2.954e+005 *	9.500e+005	418.0	284.1

PROPERTIES

		Overall	Vapour Phase	Liquid Phase	Aqueous Phase
Molecular Weight		25.24	21.93	112.4	18.03
Molar Density	(kgmole/m3)	5.341	3.899	6.449	54.67
Mass Density	(kg/m3)	134.8	85.51	724.8	985.7
Act. Volume Flow	(barrel/day)	1.108e+004	1.035e+004	442.6	292.6
Mass Enthalpy	(kJ/kg)	-5963	-4109	-2293	-1.573e+004
Mass Entropy	(kJ/kg-C)	5.229	6.947	2.117	3.417

* Specified by user.

Material Stream: 8 (continued)

Fluid Package: Basis-1
Property Package: Peng-Robinson

PROPERTIES

	Overall	Vapour Phase	Liquid Phase	Aqueous Phase
Heat Capacity (kJ/kgmole-C)	72.84	58.91	242.4	77.73
Mass Heat Capacity (kJ/kg-C)	2.886	2.686	2.157	4.311
LHV Molar Basis (Std) (Btu/SCF)	---	---	---	1.603e-003
LHV Mass Basis (Std) (kJ/kg)	---	---	---	7.850e-002
Phase Fraction [Vol. Basis]	0.7691	0.7691	0.1389	9.199e-002
Phase Fraction [Mass Basis]	0.5923	0.5923	0.2147	0.1930
Partial Pressure of CO2 (psig)	27.35	---	---	---
Cost Based on Flow (Cost/s)	0.0000	0.0000	0.0000	0.0000
Act. Gas Flow (ACT_m3/h)	68.55	68.55	---	---
Avg. Liq. Density (kgmole/m3)	18.84	16.70	6.539	55.34
Specific Heat (kJ/kgmole-C)	72.84	58.91	242.4	77.73
Std. Gas Flow (STD_m3/h)	9272	6320	447.1	2506
Std. Ideal Liq. Mass Density (kg/m3)	475.5	366.2	734.9	997.7
Act. Liq. Flow (barrel/day)	735.2	---	442.6	292.6
Z Factor	---	0.8078	0.4884	5.760e-002
Watson K	15.58	17.09	12.04	8.494
User Property	---	---	---	---
Partial Pressure of H2S (psig)	-14.69	---	---	---
Cp/(Cp - R)	1.129	1.164	1.036	1.120
Cp/Cv	1.261	1.572	1.247	1.160
Heat of Vap. (kJ/kgmole)	6.371e+004	---	---	---
Kinematic Viscosity (cSt)	---	0.1767	5.382	0.4905
Liq. Mass Density (Std. Cond) (kg/m3)	5.058	0.9315	767.5	1015
Liq. Vol. Flow (Std. Cond) (barrel/day)	2.954e+005	9.500e+005	418.0	284.1
Liquid Fraction	0.3184	0.0000	1.000	1.000
Molar Volume (m3/kgmole)	0.1872	0.2565	0.1551	1.829e-002
Mass Heat of Vap. (kJ/kg)	2524	---	---	---
Phase Fraction [Molar Basis]	0.6816	0.6816	0.0482	0.2702
Surface Tension (dyne/cm)	---	---	11.48	66.42
Thermal Conductivity (W/m-K)	---	4.250e-002	8.977e-002	0.6508
Viscosity (cP)	---	1.511e-002	3.901	0.4835
Cv (Semi-Ideal) (kJ/kgmole-C)	64.53	50.60	234.1	69.41
Mass Cv (Semi-Ideal) (kJ/kg-C)	2.557	2.307	2.083	3.850
Cv (kJ/kgmole-C)	57.79	37.47	194.4	67.01
Mass Cv (kJ/kg-C)	2.290	1.709	1.730	3.717
Cv (Ent. Method) (kJ/kgmole-C)	---	---	206.7	65.76
Mass Cv (Ent. Method) (kJ/kg-C)	---	---	1.839	3.647
Cp/Cv (Ent. Method)	---	---	1.173	1.182
Reid VP at 37.8 C (psig)	3319	---	202.5	---
True VP at 37.8 C (psig)	6318	3546	1098	1291
Liq. Vol. Flow - Sum(Std. Cond) (barrel/day)	9.507e+005	9.500e+005	418.0	284.1
HHV Molar Basis (Std) (Btu/SCF)	---	---	---	46.44
HHV Mass Basis (Std) (kJ/kg)	---	---	---	2274
CO2 Loading	---	---	---	---
CO2 App ML Con (kgmole/m3)	---	---	0.1369	2.900e-002
CO2 App WT Con (kgmol/kg)	---	---	1.888e-004	2.942e-005
Phase Fraction [Act. Vol. Basis]	0.9337	0.9337	3.994e-002	2.640e-002
Mass Exergy (kJ/kg)	296.1	---	---	---
Viscosity Index	-35.14	---	---	---
Ideal Gas Cp/Cv	1.206	1.231	1.045	1.327
Ideal Gas Cp (kJ/kgmole-C)	48.67	44.36	193.1	33.78
Mass Ideal Gas Cp (kJ/kg-C)	1.928	2.022	1.718	1.873
Bubble Point Pressure (psig)	6183	---	---	---

* Specified by user.

Material Stream: 8 (continued)

Fluid Package: Basis-1
Property Package: Peng-Robinson

COMPOSITION

Overall Phase

Vapour Fraction 0.6816

COMPONENTS	MOLAR FLOW (kgmole/h)	MOLE FRACTION	MASS FLOW (tonne/d)	MASS FRACTION	LIQUID VOLUME FLOW (m3/h)	LIQUID VOLUME FRACTION
Methane	207.0440	0.5280	79.7181	0.3356	11.0944	0.5330
Ethane	28.8006	0.0734	20.7848	0.0875	2.4348	0.1170
Propane	15.2677	0.0389	16.1583	0.0680	1.3288	0.0638
i-Butane	2.0287	0.0052	2.8300	0.0119	0.2098	0.0101
n-Butane	3.9513	0.0101	5.5120	0.0232	0.3938	0.0189
i-Pentane	0.8495	0.0022	1.4710	0.0062	0.0983	0.0047
n-Pentane	0.9602	0.0024	1.6627	0.0070	0.1100	0.0053
n-Hexane	1.4698	0.0037	3.0399	0.0128	0.1911	0.0092
Nitrogen	5.5989	0.0143	3.7642	0.0158	0.1945	0.0093
CO2	9.4151	0.0240	9.9445	0.0419	0.5020	0.0241
H2S	0.0006	0.0000	0.0005	0.0000	0.0000	0.0000
H2O	106.6990	0.2721	46.1326	0.1942	1.9261	0.0925
NBP[1]95*	0.2883	0.0007	0.4699	0.0020	0.0288	0.0014
NBP[1]121*	0.3381	0.0009	0.5912	0.0025	0.0358	0.0017
NBP[1]147*	0.4314	0.0011	0.8304	0.0035	0.0494	0.0024
NBP[1]171*	0.8224	0.0021	1.7306	0.0073	0.1013	0.0049
NBP[1]195*	1.0758	0.0027	2.4160	0.0102	0.1398	0.0067
NBP[1]222*	0.8003	0.0020	1.9331	0.0081	0.1105	0.0053
NBP[1]248*	0.6657	0.0017	1.7287	0.0073	0.0976	0.0047
NBP[1]273*	0.5358	0.0014	1.4881	0.0063	0.0831	0.0040
NBP[1]299*	0.4185	0.0011	1.2393	0.0052	0.0684	0.0033
NBP[1]325*	0.3029	0.0008	0.9528	0.0040	0.0521	0.0025
NBP[1]351*	0.2456	0.0006	0.8214	0.0035	0.0445	0.0021
NBP[1]377*	0.2247	0.0006	0.8014	0.0034	0.0429	0.0021
NBP[1]402*	0.2061	0.0005	0.7838	0.0033	0.0416	0.0020
NBP[1]428*	0.1961	0.0005	0.7956	0.0033	0.0418	0.0020
NBP[1]454*	0.1956	0.0005	0.8480	0.0036	0.0441	0.0021
NBP[1]480*	0.1982	0.0005	0.9182	0.0039	0.0473	0.0023
NBP[1]505*	0.1920	0.0005	0.9484	0.0040	0.0484	0.0023
NBP[1]531*	0.1852	0.0005	0.9740	0.0041	0.0492	0.0024
NBP[1]557*	0.1784	0.0005	0.9978	0.0042	0.0500	0.0024
NBP[1]582*	0.1706	0.0004	1.0132	0.0043	0.0503	0.0024
NBP[1]608*	0.1643	0.0004	1.0351	0.0044	0.0510	0.0025
NBP[1]634*	0.1611	0.0004	1.0753	0.0045	0.0526	0.0025
NBP[1]659*	0.1586	0.0004	1.1194	0.0047	0.0543	0.0026
NBP[1]685*	0.1641	0.0004	1.2227	0.0051	0.0588	0.0028
NBP[1]711*	0.1715	0.0004	1.3445	0.0057	0.0642	0.0031
NBP[1]736*	0.1697	0.0004	1.3915	0.0059	0.0659	0.0032
NBP[1]762*	0.1653	0.0004	1.4214	0.0060	0.0669	0.0032
NBP[1]788*	0.1585	0.0004	1.4424	0.0061	0.0674	0.0032
NBP[1]825*	0.2655	0.0007	2.5963	0.0109	0.1201	0.0058
NBP[1]873*	0.1830	0.0005	1.9404	0.0082	0.0887	0.0043
NBP[1]926*	0.1437	0.0004	1.6472	0.0069	0.0744	0.0036
NBP[1]978*	0.1474	0.0004	1.8524	0.0078	0.0825	0.0040
NBP[1]1021*	0.0728	0.0002	0.9655	0.0041	0.0426	0.0020
NBP[1]1075*	0.0449	0.0001	0.6310	0.0027	0.0276	0.0013
NBP[1]1123*	0.0417	0.0001	0.6267	0.0026	0.0271	0.0013
NBP[1]1173*	0.0300	0.0001	0.4772	0.0020	0.0205	0.0010
NBP[1]1250*	0.0393	0.0001	0.6767	0.0028	0.0287	0.0014
NBP[1]1339*	0.0364	0.0001	0.6999	0.0029	0.0291	0.0014
NBP[1]1432*	0.0257	0.0001	0.5397	0.0023	0.0221	0.0011
NBP[1]1528*	0.0180	0.0000	0.4082	0.0017	0.0165	0.0008
NBP[1]1637*	0.0127	0.0000	0.3047	0.0013	0.0122	0.0006
NBP[1]1732*	0.0101	0.0000	0.2565	0.0011	0.0101	0.0005

* Specified by user.

Material Stream: 8 (continued)

Fluid Package: Basis-1
Property Package: Peng-Robinson

COMPOSITION

Overall Phase (continued)

Vapour Fraction 0.6816

COMPONENTS	MOLAR FLOW (kgmole/h)	MOLE FRACTION	MASS FLOW (tonne/d)	MASS FRACTION	LIQUID VOLUME FLOW (m3/h)	LIQUID VOLUME FRACTION
NBP[1]1819*	0.0097	0.0000	0.2590	0.0011	0.0101	0.0005
NBP[1]1913*	0.0112	0.0000	0.3148	0.0013	0.0121	0.0006
Total	392.1623	1.0000	237.5489	1.0000	20.8162	1.0000

Vapour Phase

Phase Fraction 0.6816

COMPONENTS	MOLAR FLOW (kgmole/h)	MOLE FRACTION	MASS FLOW (tonne/d)	MASS FRACTION	LIQUID VOLUME FLOW (m3/h)	LIQUID VOLUME FRACTION
Methane	202.5454	0.7578	77.9860	0.5543	10.8533	0.6779
Ethane	27.1864	0.1017	19.6198	0.1395	2.2984	0.1436
Propane	13.5847	0.0508	14.3771	0.1022	1.1823	0.0739
i-Butane	1.6726	0.0063	2.3332	0.0166	0.1730	0.0108
n-Butane	3.1353	0.0117	4.3736	0.0311	0.3125	0.0195
i-Pentane	0.5872	0.0022	1.0168	0.0072	0.0680	0.0042
n-Pentane	0.6285	0.0024	1.0883	0.0077	0.0720	0.0045
n-Hexane	0.7165	0.0027	1.4820	0.0105	0.0932	0.0058
Nitrogen	5.5315	0.0207	3.7189	0.0264	0.1922	0.0120
CO2	8.9576	0.0335	9.4613	0.0672	0.4776	0.0298
H2S	0.0005	0.0000	0.0004	0.0000	0.0000	0.0000
H2O	0.7499	0.0028	0.3242	0.0023	0.0135	0.0008
NBP[1]95*	0.1886	0.0007	0.3075	0.0022	0.0188	0.0012
NBP[1]121*	0.1989	0.0007	0.3478	0.0025	0.0210	0.0013
NBP[1]147*	0.2219	0.0008	0.4272	0.0030	0.0254	0.0016
NBP[1]171*	0.3638	0.0014	0.7654	0.0054	0.0448	0.0028
NBP[1]195*	0.3994	0.0015	0.8971	0.0064	0.0519	0.0032
NBP[1]222*	0.2342	0.0009	0.5656	0.0040	0.0323	0.0020
NBP[1]248*	0.1505	0.0006	0.3909	0.0028	0.0221	0.0014
NBP[1]273*	0.0911	0.0003	0.2529	0.0018	0.0141	0.0009
NBP[1]299*	0.0520	0.0002	0.1541	0.0011	0.0085	0.0005
NBP[1]325*	0.0266	0.0001	0.0836	0.0006	0.0046	0.0003
NBP[1]351*	0.0148	0.0001	0.0496	0.0004	0.0027	0.0002
NBP[1]377*	0.0090	0.0000	0.0321	0.0002	0.0017	0.0001
NBP[1]402*	0.0054	0.0000	0.0206	0.0001	0.0011	0.0001
NBP[1]428*	0.0033	0.0000	0.0134	0.0001	0.0007	0.0000
NBP[1]454*	0.0021	0.0000	0.0090	0.0001	0.0005	0.0000
NBP[1]480*	0.0013	0.0000	0.0060	0.0000	0.0003	0.0000
NBP[1]505*	0.0008	0.0000	0.0038	0.0000	0.0002	0.0000
NBP[1]531*	0.0004	0.0000	0.0023	0.0000	0.0001	0.0000
NBP[1]557*	0.0002	0.0000	0.0014	0.0000	0.0001	0.0000
NBP[1]582*	0.0001	0.0000	0.0008	0.0000	0.0000	0.0000
NBP[1]608*	0.0001	0.0000	0.0005	0.0000	0.0000	0.0000
NBP[1]634*	0.0000	0.0000	0.0003	0.0000	0.0000	0.0000
NBP[1]659*	0.0000	0.0000	0.0001	0.0000	0.0000	0.0000
NBP[1]685*	0.0000	0.0000	0.0001	0.0000	0.0000	0.0000
NBP[1]711*	0.0000	0.0000	0.0000	0.0000	0.0000	0.0000
NBP[1]736*	0.0000	0.0000	0.0000	0.0000	0.0000	0.0000
NBP[1]762*	0.0000	0.0000	0.0000	0.0000	0.0000	0.0000
NBP[1]788*	0.0000	0.0000	0.0000	0.0000	0.0000	0.0000
NBP[1]825*	0.0000	0.0000	0.0000	0.0000	0.0000	0.0000
NBP[1]873*	0.0000	0.0000	0.0000	0.0000	0.0000	0.0000
NBP[1]926*	0.0000	0.0000	0.0000	0.0000	0.0000	0.0000
NBP[1]978*	0.0000	0.0000	0.0000	0.0000	0.0000	0.0000
NBP[1]1021*	0.0000	0.0000	0.0000	0.0000	0.0000	0.0000
NBP[1]1075*	0.0000	0.0000	0.0000	0.0000	0.0000	0.0000
NBP[1]1123*	0.0000	0.0000	0.0000	0.0000	0.0000	0.0000

* Specified by user.

Material Stream: 8 (continued)

Fluid Package: Basis-1
Property Package: Peng-Robinson

COMPOSITION

Vapour Phase (continued)

Phase Fraction 0.6816

COMPONENTS	MOLAR FLOW (kgmole/h)	MOLE FRACTION	MASS FLOW (tonne/d)	MASS FRACTION	LIQUID VOLUME FLOW (m3/h)	LIQUID VOLUME FRACTION
NBP[1]1173*	0.0000	0.0000	0.0000	0.0000	0.0000	0.0000
NBP[1]1250*	0.0000	0.0000	0.0000	0.0000	0.0000	0.0000
NBP[1]1339*	0.0000	0.0000	0.0000	0.0000	0.0000	0.0000
NBP[1]1432*	0.0000	0.0000	0.0000	0.0000	0.0000	0.0000
NBP[1]1528*	0.0000	0.0000	0.0000	0.0000	0.0000	0.0000
NBP[1]1637*	0.0000	0.0000	0.0000	0.0000	0.0000	0.0000
NBP[1]1732*	0.0001	0.0000	0.0018	0.0000	0.0001	0.0000
NBP[1]1819*	0.0097	0.0000	0.2590	0.0018	0.0101	0.0006
NBP[1]1913*	0.0112	0.0000	0.3148	0.0022	0.0121	0.0008
Total	267.2818	1.0000	140.6893	1.0000	16.0093	1.0000

Liquid Phase

Phase Fraction 4.822e-002

COMPONENTS	MOLAR FLOW (kgmole/h)	MOLE FRACTION	MASS FLOW (tonne/d)	MASS FRACTION	LIQUID VOLUME FLOW (m3/h)	LIQUID VOLUME FRACTION
Methane	4.4984	0.2379	1.7320	0.0340	0.2410	0.0834
Ethane	1.6142	0.0854	1.1649	0.0228	0.1365	0.0472
Propane	1.6830	0.0890	1.7812	0.0349	0.1465	0.0506
i-Butane	0.3561	0.0188	0.4967	0.0097	0.0368	0.0127
n-Butane	0.8160	0.0432	1.1383	0.0223	0.0813	0.0281
i-Pentane	0.2623	0.0139	0.4542	0.0089	0.0304	0.0105
n-Pentane	0.3318	0.0175	0.5745	0.0113	0.0380	0.0131
n-Hexane	0.7533	0.0398	1.5580	0.0305	0.0980	0.0339
Nitrogen	0.0656	0.0035	0.0441	0.0009	0.0023	0.0008
CO2	0.4013	0.0212	0.4239	0.0083	0.0214	0.0074
H2S	0.0000	0.0000	0.0000	0.0000	0.0000	0.0000
H2O	0.0360	0.0019	0.0156	0.0003	0.0007	0.0002
NBP[1]95*	0.0996	0.0053	0.1624	0.0032	0.0100	0.0034
NBP[1]121*	0.1392	0.0074	0.2434	0.0048	0.0147	0.0051
NBP[1]147*	0.2095	0.0111	0.4032	0.0079	0.0240	0.0083
NBP[1]171*	0.4587	0.0243	0.9652	0.0189	0.0565	0.0195
NBP[1]195*	0.6763	0.0358	1.5189	0.0298	0.0879	0.0304
NBP[1]222*	0.5662	0.0299	1.3674	0.0268	0.0782	0.0270
NBP[1]248*	0.5151	0.0272	1.3379	0.0262	0.0755	0.0261
NBP[1]273*	0.4448	0.0235	1.2352	0.0242	0.0690	0.0238
NBP[1]299*	0.3665	0.0194	1.0852	0.0213	0.0599	0.0207
NBP[1]325*	0.2763	0.0146	0.8692	0.0170	0.0475	0.0164
NBP[1]351*	0.2308	0.0122	0.7719	0.0151	0.0418	0.0144
NBP[1]377*	0.2157	0.0114	0.7693	0.0151	0.0412	0.0143
NBP[1]402*	0.2007	0.0106	0.7632	0.0150	0.0405	0.0140
NBP[1]428*	0.1928	0.0102	0.7821	0.0153	0.0411	0.0142
NBP[1]454*	0.1935	0.0102	0.8390	0.0164	0.0436	0.0151
NBP[1]480*	0.1969	0.0104	0.9121	0.0179	0.0470	0.0162
NBP[1]505*	0.1912	0.0101	0.9446	0.0185	0.0482	0.0167
NBP[1]531*	0.1848	0.0098	0.9717	0.0191	0.0491	0.0170
NBP[1]557*	0.1782	0.0094	0.9965	0.0195	0.0499	0.0173
NBP[1]582*	0.1704	0.0090	1.0124	0.0198	0.0503	0.0174
NBP[1]608*	0.1642	0.0087	1.0346	0.0203	0.0510	0.0176
NBP[1]634*	0.1611	0.0085	1.0751	0.0211	0.0525	0.0182
NBP[1]659*	0.1586	0.0084	1.1193	0.0219	0.0543	0.0188
NBP[1]685*	0.1641	0.0087	1.2227	0.0240	0.0588	0.0203
NBP[1]711*	0.1715	0.0091	1.3444	0.0264	0.0642	0.0222
NBP[1]736*	0.1697	0.0090	1.3915	0.0273	0.0659	0.0228
NBP[1]762*	0.1653	0.0087	1.4214	0.0279	0.0669	0.0231
NBP[1]788*	0.1585	0.0084	1.4424	0.0283	0.0674	0.0233

* Specified by user.

Material Stream: 8 (continued)

Fluid Package: Basis-1
Property Package: Peng-Robinson

COMPOSITION

Liquid Phase (continued)

Phase Fraction 4.822e-002

COMPONENTS	MOLAR FLOW (kgmole/h)	MOLE FRACTION	MASS FLOW (tonne/d)	MASS FRACTION	LIQUID VOLUME FLOW (m3/h)	LIQUID VOLUME FRACTION
NBP[1]825*	0.2655	0.0140	2.5963	0.0509	0.1201	0.0415
NBP[1]873*	0.1830	0.0097	1.9404	0.0380	0.0887	0.0307
NBP[1]926*	0.1437	0.0076	1.6472	0.0323	0.0744	0.0257
NBP[1]978*	0.1474	0.0078	1.8524	0.0363	0.0825	0.0285
NBP[1]1021*	0.0728	0.0039	0.9655	0.0189	0.0426	0.0147
NBP[1]1075*	0.0449	0.0024	0.6310	0.0124	0.0276	0.0095
NBP[1]1123*	0.0417	0.0022	0.6267	0.0123	0.0271	0.0094
NBP[1]1173*	0.0300	0.0016	0.4772	0.0094	0.0205	0.0071
NBP[1]1250*	0.0393	0.0021	0.6767	0.0133	0.0287	0.0099
NBP[1]1339*	0.0364	0.0019	0.6999	0.0137	0.0291	0.0101
NBP[1]1432*	0.0257	0.0014	0.5397	0.0106	0.0221	0.0077
NBP[1]1528*	0.0180	0.0010	0.4082	0.0080	0.0165	0.0057
NBP[1]1637*	0.0127	0.0007	0.3047	0.0060	0.0122	0.0042
NBP[1]1732*	0.0101	0.0005	0.2547	0.0050	0.0101	0.0035
NBP[1]1819*	0.0000	0.0000	0.0000	0.0000	0.0000	0.0000
NBP[1]1913*	0.0000	0.0000	0.0000	0.0000	0.0000	0.0000
Total	18.9094	1.0000	51.0062	1.0000	2.8919	1.0000

Aqueous Phase

Phase Fraction 0.2702

COMPONENTS	MOLAR FLOW (kgmole/h)	MOLE FRACTION	MASS FLOW (tonne/d)	MASS FRACTION	LIQUID VOLUME FLOW (m3/h)	LIQUID VOLUME FRACTION
Methane	0.0002	0.0000	0.0001	0.0000	0.0000	0.0000
Ethane	0.0000	0.0000	0.0000	0.0000	0.0000	0.0000
Propane	0.0000	0.0000	0.0000	0.0000	0.0000	0.0000
i-Butane	0.0000	0.0000	0.0000	0.0000	0.0000	0.0000
n-Butane	0.0000	0.0000	0.0000	0.0000	0.0000	0.0000
i-Pentane	0.0000	0.0000	0.0000	0.0000	0.0000	0.0000
n-Pentane	0.0000	0.0000	0.0000	0.0000	0.0000	0.0000
n-Hexane	0.0000	0.0000	0.0000	0.0000	0.0000	0.0000
Nitrogen	0.0017	0.0000	0.0011	0.0000	0.0001	0.0000
CO2	0.0562	0.0005	0.0594	0.0013	0.0030	0.0016
H2S	0.0000	0.0000	0.0000	0.0000	0.0000	0.0000
H2O	105.9130	0.9995	45.7928	0.9987	1.9119	0.9984
NBP[1]95*	0.0000	0.0000	0.0000	0.0000	0.0000	0.0000
NBP[1]121*	0.0000	0.0000	0.0000	0.0000	0.0000	0.0000
NBP[1]147*	0.0000	0.0000	0.0000	0.0000	0.0000	0.0000
NBP[1]171*	0.0000	0.0000	0.0000	0.0000	0.0000	0.0000
NBP[1]195*	0.0000	0.0000	0.0000	0.0000	0.0000	0.0000
NBP[1]222*	0.0000	0.0000	0.0000	0.0000	0.0000	0.0000
NBP[1]248*	0.0000	0.0000	0.0000	0.0000	0.0000	0.0000
NBP[1]273*	0.0000	0.0000	0.0000	0.0000	0.0000	0.0000
NBP[1]299*	0.0000	0.0000	0.0000	0.0000	0.0000	0.0000
NBP[1]325*	0.0000	0.0000	0.0000	0.0000	0.0000	0.0000
NBP[1]351*	0.0000	0.0000	0.0000	0.0000	0.0000	0.0000
NBP[1]377*	0.0000	0.0000	0.0000	0.0000	0.0000	0.0000
NBP[1]402*	0.0000	0.0000	0.0000	0.0000	0.0000	0.0000
NBP[1]428*	0.0000	0.0000	0.0000	0.0000	0.0000	0.0000
NBP[1]454*	0.0000	0.0000	0.0000	0.0000	0.0000	0.0000
NBP[1]480*	0.0000	0.0000	0.0000	0.0000	0.0000	0.0000
NBP[1]505*	0.0000	0.0000	0.0000	0.0000	0.0000	0.0000
NBP[1]531*	0.0000	0.0000	0.0000	0.0000	0.0000	0.0000
NBP[1]557*	0.0000	0.0000	0.0000	0.0000	0.0000	0.0000
NBP[1]582*	0.0000	0.0000	0.0000	0.0000	0.0000	0.0000
NBP[1]608*	0.0000	0.0000	0.0000	0.0000	0.0000	0.0000

* Specified by user.

Material Stream: 8 (continued)

Fluid Package: Basis-1
Property Package: Peng-Robinson

COMPOSITION

Aqueous Phase (continued)

Phase Fraction 0.2702

COMPONENTS	MOLAR FLOW (kgmole/h)	MOLE FRACTION	MASS FLOW (tonne/d)	MASS FRACTION	LIQUID VOLUME FLOW (m3/h)	LIQUID VOLUME FRACTION
NBP[1]634*	0.0000	0.0000	0.0000	0.0000	0.0000	0.0000
NBP[1]659*	0.0000	0.0000	0.0000	0.0000	0.0000	0.0000
NBP[1]685*	0.0000	0.0000	0.0000	0.0000	0.0000	0.0000
NBP[1]711*	0.0000	0.0000	0.0000	0.0000	0.0000	0.0000
NBP[1]736*	0.0000	0.0000	0.0000	0.0000	0.0000	0.0000
NBP[1]762*	0.0000	0.0000	0.0000	0.0000	0.0000	0.0000
NBP[1]788*	0.0000	0.0000	0.0000	0.0000	0.0000	0.0000
NBP[1]825*	0.0000	0.0000	0.0000	0.0000	0.0000	0.0000
NBP[1]873*	0.0000	0.0000	0.0000	0.0000	0.0000	0.0000
NBP[1]926*	0.0000	0.0000	0.0000	0.0000	0.0000	0.0000
NBP[1]978*	0.0000	0.0000	0.0000	0.0000	0.0000	0.0000
NBP[1]1021*	0.0000	0.0000	0.0000	0.0000	0.0000	0.0000
NBP[1]1075*	0.0000	0.0000	0.0000	0.0000	0.0000	0.0000
NBP[1]1123*	0.0000	0.0000	0.0000	0.0000	0.0000	0.0000
NBP[1]1173*	0.0000	0.0000	0.0000	0.0000	0.0000	0.0000
NBP[1]1250*	0.0000	0.0000	0.0000	0.0000	0.0000	0.0000
NBP[1]1339*	0.0000	0.0000	0.0000	0.0000	0.0000	0.0000
NBP[1]1432*	0.0000	0.0000	0.0000	0.0000	0.0000	0.0000
NBP[1]1528*	0.0000	0.0000	0.0000	0.0000	0.0000	0.0000
NBP[1]1637*	0.0000	0.0000	0.0000	0.0000	0.0000	0.0000
NBP[1]1732*	0.0000	0.0000	0.0000	0.0000	0.0000	0.0000
NBP[1]1819*	0.0000	0.0000	0.0000	0.0000	0.0000	0.0000
NBP[1]1913*	0.0000	0.0000	0.0000	0.0000	0.0000	0.0000
Total	105.9711	1.0000	45.8534	1.0000	1.9149	1.0000

Material Stream: 9

Fluid Package: Basis-1
Property Package: Peng-Robinson

CONDITIONS

		Overall	Vapour Phase	Liquid Phase	Aqueous Phase
Vapour / Phase Fraction		0.0000	0.0000	1.0000	0.0000
Temperature:	(F)	134.9	134.9	134.9	134.9
Pressure:	(psig)	1235	1235	1235	1235
Molar Flow	(MMSCFD)	0.3795	0.0000	0.3795	0.0000
Mass Flow	(tonne/d)	51.02	0.0000	51.02	0.0000
Std Ideal Liq Vol Flow	(barrel/day)	436.6	0.0000	436.6	0.0000
Molar Enthalpy	(kJ/kgmole)	-2.579e+005	-9.012e+004	-2.579e+005	-2.836e+005
Molar Entropy	(kJ/kgmole-C)	238.0	152.4	238.0	61.60
Heat Flow	(MMBtu/hr)	-4.620	0.0000	-4.620	0.0000
Liq Vol Flow @Std Cond	(barrel/day)	418.1 *	0.0000	418.1	0.0000

PROPERTIES

		Overall	Vapour Phase	Liquid Phase	Aqueous Phase
Molecular Weight		112.5	21.93	112.5	18.03
Molar Density	(kgmole/m3)	6.446	3.882	6.446	54.68
Mass Density	(kg/m3)	725.0	85.13	725.0	985.8
Act. Volume Flow	(barrel/day)	442.7	0.0000	442.7	0.0000
Mass Enthalpy	(kJ/kg)	-2293	-4110	-2293	-1.573e+004
Mass Entropy	(kJ/kg-C)	2.116	6.950	2.116	3.416
Heat Capacity	(kJ/kgmole-C)	242.5	58.84	242.5	77.73
Mass Heat Capacity	(kJ/kg-C)	2.157	2.683	2.157	4.311
LHV Molar Basis (Std)	(Btu/SCF)	---	---	---	1.593e-003
LHV Mass Basis (Std)	(kJ/kg)	---	---	---	7.799e-002
Phase Fraction [Vol. Basis]		---	---	1.000	---

* Specified by user.

Material Stream: 9 (continued)

Fluid Package: Basis-1
Property Package: Peng-Robinson

PROPERTIES

	Overall	Vapour Phase	Liquid Phase	Aqueous Phase
Phase Fraction [Mass Basis]	0.0000	0.0000	1.000	0.0000
Partial Pressure of CO2 (psig)	-14.70	---	---	---
Cost Based on Flow (Cost/s)	0.0000	0.0000	0.0000	0.0000
Act. Gas Flow (ACT_m3/h)	---	---	---	---
Avg. Liq. Density (kgmole/m3)	6.535	16.70	6.535	55.34
Specific Heat (kJ/kgmole-C)	242.5	58.84	242.5	77.73
Std. Gas Flow (STD_m3/h)	446.9	0.0000	446.9	0.0000
Std. Ideal Liq. Mass Density (kg/m3)	735.0	366.1	735.0	997.7
Act. Liq. Flow (barrel/day)	442.7	---	442.7	0.0000
Z Factor	---	0.8082	0.4867	5.738e-002
Watson K	12.04	17.09	12.04	8.494
User Property	---	---	---	---
Partial Pressure of H2S (psig)	-14.70	---	---	---
Cp/(Cp - R)	1.035	1.165	1.035	1.120
Cp/Cv	1.247	1.571	1.247	1.160
Heat of Vap. (kJ/kgmole)	1.689e+005	---	---	---
Kinematic Viscosity (cSt)	5.420	0.1772	5.420	0.4910
Liq. Mass Density (Std. Cond) (kg/m3)	767.6	0.9313	767.6	1015
Liq. Vol. Flow (Std. Cond) (barrel/day)	418.1	0.0000	418.1	0.0000
Liquid Fraction	1.000	0.0000	1.000	1.000
Molar Volume (m3/kgmole)	0.1551	0.2576	0.1551	1.829e-002
Mass Heat of Vap. (kJ/kg)	1502	---	---	---
Phase Fraction [Molar Basis]	0.0000	0.0000	1.0000	0.0000
Surface Tension (dyne/cm)	11.50	---	11.50	66.43
Thermal Conductivity (W/m-K)	8.981e-002	4.244e-002	8.981e-002	0.6507
Viscosity (cP)	3.929	1.509e-002	3.929	0.4840
Cv (Semi-Ideal) (kJ/kgmole-C)	234.2	50.53	234.2	69.41
Mass Cv (Semi-Ideal) (kJ/kg-C)	2.083	2.304	2.083	3.850
Cv (kJ/kgmole-C)	194.6	37.46	194.6	67.01
Mass Cv (kJ/kg-C)	1.730	1.708	1.730	3.717
Cv (Ent. Method) (kJ/kgmole-C)	205.8	---	205.8	65.44
Mass Cv (Ent. Method) (kJ/kg-C)	1.830	---	1.830	3.630
Cp/Cv (Ent. Method)	1.178	---	1.178	1.188
Reid VP at 37.8 C (psig)	201.9	---	201.9	---
True VP at 37.8 C (psig)	1094	2958	1094	1267
Liq. Vol. Flow - Sum(Std. Cond) (barrel/day)	418.1	0.0000	418.1	0.0000
HHV Molar Basis (Std) (Btu/SCF)	---	---	---	46.44
HHV Mass Basis (Std) (kJ/kg)	---	---	---	2274
CO2 Loading	---	---	---	---
CO2 App ML Con (kgmole/m3)	0.1365	---	0.1365	---
CO2 App WT Con (kgmol/kg)	1.883e-004	---	1.883e-004	---
Phase Fraction [Act. Vol. Basis]	0.0000	0.0000	1.000	0.0000
Mass Exergy (kJ/kg)	47.72	---	---	---
Viscosity Index	19.74	---	---	---
Ideal Gas Cp/Cv	1.045	1.231	1.045	1.327
Ideal Gas Cp (kJ/kgmole-C)	193.2	44.35	193.2	33.78
Mass Ideal Gas Cp (kJ/kg-C)	1.718	2.022	1.718	1.873
Bubble Point Pressure (psig)	1235	---	---	---

COMPOSITION

Overall Phase

Vapour Fraction 0.0000

COMPONENTS	MOLAR FLOW (kgmole/h)	MOLE FRACTION	MASS FLOW (tonne/d)	MASS FRACTION	LIQUID VOLUME FLOW (m3/h)	LIQUID VOLUME FRACTION
Methane	4.4834	0.2372	1.7262	0.0338	0.2402	0.0831
Ethane	1.6120	0.0853	1.1633	0.0228	0.1363	0.0471
Propane	1.6831	0.0890	1.7813	0.0349	0.1465	0.0506

Licensed to: PETROCHEMICAL ENGINEERIN
* Specified by user.

Material Stream: 9 (continued)

Fluid Package: Basis-1
Property Package: Peng-Robinson

COMPOSITION

Overall Phase (continued)

Vapour Fraction 0.0000

COMPONENTS	MOLAR FLOW (kgmole/h)	MOLE FRACTION	MASS FLOW (tonne/d)	MASS FRACTION	LIQUID VOLUME FLOW (m3/h)	LIQUID VOLUME FRACTION
i-Butane	0.3565	0.0189	0.4973	0.0097	0.0369	0.0127
n-Butane	0.8171	0.0432	1.1398	0.0223	0.0814	0.0282
i-Pentane	0.2628	0.0139	0.4551	0.0089	0.0304	0.0105
n-Pentane	0.3324	0.0176	0.5757	0.0113	0.0381	0.0132
n-Hexane	0.7549	0.0399	1.5614	0.0306	0.0982	0.0339
Nitrogen	0.0653	0.0035	0.0439	0.0009	0.0023	0.0008
CO2	0.4004	0.0212	0.4229	0.0083	0.0213	0.0074
H2S	0.0000	0.0000	0.0000	0.0000	0.0000	0.0000
H2O	0.0359	0.0019	0.0155	0.0003	0.0006	0.0002
NBP[1]95*	0.0998	0.0053	0.1627	0.0032	0.0100	0.0034
NBP[1]121*	0.1395	0.0074	0.2439	0.0048	0.0148	0.0051
NBP[1]147*	0.2100	0.0111	0.4041	0.0079	0.0240	0.0083
NBP[1]171*	0.4597	0.0243	0.9672	0.0190	0.0566	0.0196
NBP[1]195*	0.6777	0.0359	1.5220	0.0298	0.0881	0.0304
NBP[1]222*	0.5672	0.0300	1.3699	0.0268	0.0783	0.0271
NBP[1]248*	0.5160	0.0273	1.3399	0.0263	0.0757	0.0262
NBP[1]273*	0.4453	0.0236	1.2368	0.0242	0.0690	0.0239
NBP[1]299*	0.3669	0.0194	1.0864	0.0213	0.0600	0.0207
NBP[1]325*	0.2765	0.0146	0.8699	0.0170	0.0476	0.0164
NBP[1]351*	0.2310	0.0122	0.7723	0.0151	0.0418	0.0145
NBP[1]377*	0.2158	0.0114	0.7696	0.0151	0.0412	0.0143
NBP[1]402*	0.2007	0.0106	0.7634	0.0150	0.0405	0.0140
NBP[1]428*	0.1928	0.0102	0.7823	0.0153	0.0411	0.0142
NBP[1]454*	0.1935	0.0102	0.8391	0.0164	0.0436	0.0151
NBP[1]480*	0.1969	0.0104	0.9122	0.0179	0.0470	0.0162
NBP[1]505*	0.1912	0.0101	0.9446	0.0185	0.0482	0.0167
NBP[1]531*	0.1848	0.0098	0.9717	0.0190	0.0491	0.0170
NBP[1]557*	0.1782	0.0094	0.9965	0.0195	0.0499	0.0173
NBP[1]582*	0.1704	0.0090	1.0124	0.0198	0.0503	0.0174
NBP[1]608*	0.1642	0.0087	1.0346	0.0203	0.0510	0.0176
NBP[1]634*	0.1611	0.0085	1.0751	0.0211	0.0525	0.0182
NBP[1]659*	0.1586	0.0084	1.1193	0.0219	0.0543	0.0188
NBP[1]685*	0.1641	0.0087	1.2227	0.0240	0.0588	0.0203
NBP[1]711*	0.1715	0.0091	1.3444	0.0263	0.0642	0.0222
NBP[1]736*	0.1697	0.0090	1.3915	0.0273	0.0659	0.0228
NBP[1]762*	0.1653	0.0087	1.4214	0.0279	0.0669	0.0231
NBP[1]788*	0.1585	0.0084	1.4424	0.0283	0.0674	0.0233
NBP[1]825*	0.2655	0.0140	2.5963	0.0509	0.1201	0.0415
NBP[1]873*	0.1830	0.0097	1.9404	0.0380	0.0887	0.0307
NBP[1]926*	0.1437	0.0076	1.6472	0.0323	0.0744	0.0257
NBP[1]978*	0.1474	0.0078	1.8524	0.0363	0.0825	0.0285
NBP[1]1021*	0.0728	0.0039	0.9655	0.0189	0.0426	0.0147
NBP[1]1075*	0.0449	0.0024	0.6310	0.0124	0.0276	0.0095
NBP[1]1123*	0.0417	0.0022	0.6267	0.0123	0.0271	0.0094
NBP[1]1173*	0.0300	0.0016	0.4772	0.0094	0.0205	0.0071
NBP[1]1250*	0.0393	0.0021	0.6767	0.0133	0.0287	0.0099
NBP[1]1339*	0.0364	0.0019	0.6999	0.0137	0.0291	0.0101
NBP[1]1432*	0.0257	0.0014	0.5397	0.0106	0.0221	0.0077
NBP[1]1528*	0.0180	0.0010	0.4082	0.0080	0.0165	0.0057
NBP[1]1637*	0.0127	0.0007	0.3047	0.0060	0.0122	0.0042
NBP[1]1732*	0.0101	0.0005	0.2548	0.0050	0.0101	0.0035
NBP[1]1819*	0.0000	0.0000	0.0000	0.0000	0.0000	0.0000
NBP[1]1913*	0.0000	0.0000	0.0000	0.0000	0.0000	0.0000
Total	18.9020	1.0000	51.0219	1.0000	2.8923	1.0000

* Specified by user.

Material Stream: 9 (continued)

Fluid Package: Basis-1
Property Package: Peng-Robinson

COMPOSITION

Vapour Phase

Phase Fraction 0.0000

COMPONENTS	MOLAR FLOW (kgmole/h)	MOLE FRACTION	MASS FLOW (tonne/d)	MASS FRACTION	LIQUID VOLUME FLOW (m3/h)	LIQUID VOLUME FRACTION
Methane	0.0000	0.7578	0.0000	0.5544	0.0000	0.6780
Ethane	0.0000	0.1017	0.0000	0.1395	0.0000	0.1436
Propane	0.0000	0.0508	0.0000	0.1022	0.0000	0.0739
i-Butane	0.0000	0.0063	0.0000	0.0166	0.0000	0.0108
n-Butane	0.0000	0.0117	0.0000	0.0311	0.0000	0.0195
i-Pentane	0.0000	0.0022	0.0000	0.0072	0.0000	0.0042
n-Pentane	0.0000	0.0023	0.0000	0.0077	0.0000	0.0045
n-Hexane	0.0000	0.0027	0.0000	0.0105	0.0000	0.0058
Nitrogen	0.0000	0.0207	0.0000	0.0264	0.0000	0.0120
CO2	0.0000	0.0335	0.0000	0.0673	0.0000	0.0298
H2S	0.0000	0.0000	0.0000	0.0000	0.0000	0.0000
H2O	0.0000	0.0028	0.0000	0.0023	0.0000	0.0008
NBP[1]95*	0.0000	0.0007	0.0000	0.0022	0.0000	0.0012
NBP[1]121*	0.0000	0.0007	0.0000	0.0025	0.0000	0.0013
NBP[1]147*	0.0000	0.0008	0.0000	0.0030	0.0000	0.0016
NBP[1]171*	0.0000	0.0014	0.0000	0.0054	0.0000	0.0028
NBP[1]195*	0.0000	0.0015	0.0000	0.0064	0.0000	0.0032
NBP[1]222*	0.0000	0.0009	0.0000	0.0040	0.0000	0.0020
NBP[1]248*	0.0000	0.0006	0.0000	0.0028	0.0000	0.0014
NBP[1]273*	0.0000	0.0003	0.0000	0.0018	0.0000	0.0009
NBP[1]299*	0.0000	0.0002	0.0000	0.0011	0.0000	0.0005
NBP[1]325*	0.0000	0.0001	0.0000	0.0006	0.0000	0.0003
NBP[1]351*	0.0000	0.0001	0.0000	0.0003	0.0000	0.0002
NBP[1]377*	0.0000	0.0000	0.0000	0.0002	0.0000	0.0001
NBP[1]402*	0.0000	0.0000	0.0000	0.0001	0.0000	0.0001
NBP[1]428*	0.0000	0.0000	0.0000	0.0001	0.0000	0.0000
NBP[1]454*	0.0000	0.0000	0.0000	0.0001	0.0000	0.0000
NBP[1]480*	0.0000	0.0000	0.0000	0.0000	0.0000	0.0000
NBP[1]505*	0.0000	0.0000	0.0000	0.0000	0.0000	0.0000
NBP[1]531*	0.0000	0.0000	0.0000	0.0000	0.0000	0.0000
NBP[1]557*	0.0000	0.0000	0.0000	0.0000	0.0000	0.0000
NBP[1]582*	0.0000	0.0000	0.0000	0.0000	0.0000	0.0000
NBP[1]608*	0.0000	0.0000	0.0000	0.0000	0.0000	0.0000
NBP[1]634*	0.0000	0.0000	0.0000	0.0000	0.0000	0.0000
NBP[1]659*	0.0000	0.0000	0.0000	0.0000	0.0000	0.0000
NBP[1]685*	0.0000	0.0000	0.0000	0.0000	0.0000	0.0000
NBP[1]711*	0.0000	0.0000	0.0000	0.0000	0.0000	0.0000
NBP[1]736*	0.0000	0.0000	0.0000	0.0000	0.0000	0.0000
NBP[1]762*	0.0000	0.0000	0.0000	0.0000	0.0000	0.0000
NBP[1]788*	0.0000	0.0000	0.0000	0.0000	0.0000	0.0000
NBP[1]825*	0.0000	0.0000	0.0000	0.0000	0.0000	0.0000
NBP[1]873*	0.0000	0.0000	0.0000	0.0000	0.0000	0.0000
NBP[1]926*	0.0000	0.0000	0.0000	0.0000	0.0000	0.0000
NBP[1]978*	0.0000	0.0000	0.0000	0.0000	0.0000	0.0000
NBP[1]1021*	0.0000	0.0000	0.0000	0.0000	0.0000	0.0000
NBP[1]1075*	0.0000	0.0000	0.0000	0.0000	0.0000	0.0000
NBP[1]1123*	0.0000	0.0000	0.0000	0.0000	0.0000	0.0000
NBP[1]1173*	0.0000	0.0000	0.0000	0.0000	0.0000	0.0000
NBP[1]1250*	0.0000	0.0000	0.0000	0.0000	0.0000	0.0000
NBP[1]1339*	0.0000	0.0000	0.0000	0.0000	0.0000	0.0000
NBP[1]1432*	0.0000	0.0000	0.0000	0.0000	0.0000	0.0000
NBP[1]1528*	0.0000	0.0000	0.0000	0.0000	0.0000	0.0000
NBP[1]1637*	0.0000	0.0000	0.0000	0.0000	0.0000	0.0000
NBP[1]1732*	0.0000	0.0000	0.0000	0.0000	0.0000	0.0000

* Specified by user.

Material Stream: 9 (continued)

Fluid Package: Basis-1
Property Package: Peng-Robinson

COMPOSITION

Vapour Phase (continued)

Phase Fraction 0.0000

COMPONENTS	MOLAR FLOW (kgmole/h)	MOLE FRACTION	MASS FLOW (tonne/d)	MASS FRACTION	LIQUID VOLUME FLOW (m3/h)	LIQUID VOLUME FRACTION
NBP[1]1819*	0.0000	0.0000	0.0000	0.0018	0.0000	0.0006
NBP[1]1913*	0.0000	0.0000	0.0000	0.0022	0.0000	0.0008
Total	0.0000	1.0000	0.0000	1.0000	0.0000	1.0000

Liquid Phase

Phase Fraction 1.000

COMPONENTS	MOLAR FLOW (kgmole/h)	MOLE FRACTION	MASS FLOW (tonne/d)	MASS FRACTION	LIQUID VOLUME FLOW (m3/h)	LIQUID VOLUME FRACTION
Methane	4.4834	0.2372	1.7262	0.0338	0.2402	0.0831
Ethane	1.6120	0.0853	1.1633	0.0228	0.1363	0.0471
Propane	1.6831	0.0890	1.7813	0.0349	0.1465	0.0506
i-Butane	0.3565	0.0189	0.4973	0.0097	0.0369	0.0127
n-Butane	0.8171	0.0432	1.1398	0.0223	0.0814	0.0282
i-Pentane	0.2628	0.0139	0.4551	0.0089	0.0304	0.0105
n-Pentane	0.3324	0.0176	0.5757	0.0113	0.0381	0.0132
n-Hexane	0.7549	0.0399	1.5614	0.0306	0.0982	0.0339
Nitrogen	0.0653	0.0035	0.0439	0.0009	0.0023	0.0008
CO2	0.4004	0.0212	0.4229	0.0083	0.0213	0.0074
H2S	0.0000	0.0000	0.0000	0.0000	0.0000	0.0000
H2O	0.0359	0.0019	0.0155	0.0003	0.0006	0.0002
NBP[1]95*	0.0998	0.0053	0.1627	0.0032	0.0100	0.0034
NBP[1]121*	0.1395	0.0074	0.2439	0.0048	0.0148	0.0051
NBP[1]147*	0.2100	0.0111	0.4041	0.0079	0.0240	0.0083
NBP[1]171*	0.4597	0.0243	0.9672	0.0190	0.0566	0.0196
NBP[1]195*	0.6777	0.0359	1.5220	0.0298	0.0881	0.0304
NBP[1]222*	0.5672	0.0300	1.3699	0.0268	0.0783	0.0271
NBP[1]248*	0.5160	0.0273	1.3399	0.0263	0.0757	0.0262
NBP[1]273*	0.4453	0.0236	1.2368	0.0242	0.0690	0.0239
NBP[1]299*	0.3669	0.0194	1.0864	0.0213	0.0600	0.0207
NBP[1]325*	0.2765	0.0146	0.8699	0.0170	0.0476	0.0164
NBP[1]351*	0.2310	0.0122	0.7723	0.0151	0.0418	0.0145
NBP[1]377*	0.2158	0.0114	0.7696	0.0151	0.0412	0.0143
NBP[1]402*	0.2007	0.0106	0.7634	0.0150	0.0405	0.0140
NBP[1]428*	0.1928	0.0102	0.7823	0.0153	0.0411	0.0142
NBP[1]454*	0.1935	0.0102	0.8391	0.0164	0.0436	0.0151
NBP[1]480*	0.1969	0.0104	0.9122	0.0179	0.0470	0.0162
NBP[1]505*	0.1912	0.0101	0.9446	0.0185	0.0482	0.0167
NBP[1]531*	0.1848	0.0098	0.9717	0.0190	0.0491	0.0170
NBP[1]557*	0.1782	0.0094	0.9965	0.0195	0.0499	0.0173
NBP[1]582*	0.1704	0.0090	1.0124	0.0198	0.0503	0.0174
NBP[1]608*	0.1642	0.0087	1.0346	0.0203	0.0510	0.0176
NBP[1]634*	0.1611	0.0085	1.0751	0.0211	0.0525	0.0182
NBP[1]659*	0.1586	0.0084	1.1193	0.0219	0.0543	0.0188
NBP[1]685*	0.1641	0.0087	1.2227	0.0240	0.0588	0.0203
NBP[1]711*	0.1715	0.0091	1.3444	0.0263	0.0642	0.0222
NBP[1]736*	0.1697	0.0090	1.3915	0.0273	0.0659	0.0228
NBP[1]762*	0.1653	0.0087	1.4214	0.0279	0.0669	0.0231
NBP[1]788*	0.1585	0.0084	1.4424	0.0283	0.0674	0.0233
NBP[1]825*	0.2655	0.0140	2.5963	0.0509	0.1201	0.0415
NBP[1]873*	0.1830	0.0097	1.9404	0.0380	0.0887	0.0307
NBP[1]926*	0.1437	0.0076	1.6472	0.0323	0.0744	0.0257
NBP[1]978*	0.1474	0.0078	1.8524	0.0363	0.0825	0.0285
NBP[1]1021*	0.0728	0.0039	0.9655	0.0189	0.0426	0.0147
NBP[1]1075*	0.0449	0.0024	0.6310	0.0124	0.0276	0.0095
NBP[1]1123*	0.0417	0.0022	0.6267	0.0123	0.0271	0.0094

Licensed to: PETROCHEMICAL ENGINEERIN
* Specified by user.

Material Stream: 9 (continued)

Fluid Package: Basis-1
Property Package: Peng-Robinson

COMPOSITION

Liquid Phase (continued)

Phase Fraction 1.000

COMPONENTS	MOLAR FLOW (kgmole/h)	MOLE FRACTION	MASS FLOW (tonne/d)	MASS FRACTION	LIQUID VOLUME FLOW (m3/h)	LIQUID VOLUME FRACTION
NBP[1]1173*	0.0300	0.0016	0.4772	0.0094	0.0205	0.0071
NBP[1]1250*	0.0393	0.0021	0.6767	0.0133	0.0287	0.0099
NBP[1]1339*	0.0364	0.0019	0.6999	0.0137	0.0291	0.0101
NBP[1]1432*	0.0257	0.0014	0.5397	0.0106	0.0221	0.0077
NBP[1]1528*	0.0180	0.0010	0.4082	0.0080	0.0165	0.0057
NBP[1]1637*	0.0127	0.0007	0.3047	0.0060	0.0122	0.0042
NBP[1]1732*	0.0101	0.0005	0.2548	0.0050	0.0101	0.0035
NBP[1]1819*	0.0000	0.0000	0.0000	0.0000	0.0000	0.0000
NBP[1]1913*	0.0000	0.0000	0.0000	0.0000	0.0000	0.0000
Total	18.9020	1.0000	51.0219	1.0000	2.8923	1.0000

Aqueous Phase

Phase Fraction 0.0000

COMPONENTS	MOLAR FLOW (kgmole/h)	MOLE FRACTION	MASS FLOW (tonne/d)	MASS FRACTION	LIQUID VOLUME FLOW (m3/h)	LIQUID VOLUME FRACTION
Methane	0.0000	0.0000	0.0000	0.0000	0.0000	0.0000
Ethane	0.0000	0.0000	0.0000	0.0000	0.0000	0.0000
Propane	0.0000	0.0000	0.0000	0.0000	0.0000	0.0000
i-Butane	0.0000	0.0000	0.0000	0.0000	0.0000	0.0000
n-Butane	0.0000	0.0000	0.0000	0.0000	0.0000	0.0000
i-Pentane	0.0000	0.0000	0.0000	0.0000	0.0000	0.0000
n-Pentane	0.0000	0.0000	0.0000	0.0000	0.0000	0.0000
n-Hexane	0.0000	0.0000	0.0000	0.0000	0.0000	0.0000
Nitrogen	0.0000	0.0000	0.0000	0.0000	0.0000	0.0000
CO2	0.0000	0.0005	0.0000	0.0013	0.0000	0.0016
H2S	0.0000	0.0000	0.0000	0.0000	0.0000	0.0000
H2O	0.0000	0.9995	0.0000	0.9987	0.0000	0.9984
NBP[1]95*	0.0000	0.0000	0.0000	0.0000	0.0000	0.0000
NBP[1]121*	0.0000	0.0000	0.0000	0.0000	0.0000	0.0000
NBP[1]147*	0.0000	0.0000	0.0000	0.0000	0.0000	0.0000
NBP[1]171*	0.0000	0.0000	0.0000	0.0000	0.0000	0.0000
NBP[1]195*	0.0000	0.0000	0.0000	0.0000	0.0000	0.0000
NBP[1]222*	0.0000	0.0000	0.0000	0.0000	0.0000	0.0000
NBP[1]248*	0.0000	0.0000	0.0000	0.0000	0.0000	0.0000
NBP[1]273*	0.0000	0.0000	0.0000	0.0000	0.0000	0.0000
NBP[1]299*	0.0000	0.0000	0.0000	0.0000	0.0000	0.0000
NBP[1]325*	0.0000	0.0000	0.0000	0.0000	0.0000	0.0000
NBP[1]351*	0.0000	0.0000	0.0000	0.0000	0.0000	0.0000
NBP[1]377*	0.0000	0.0000	0.0000	0.0000	0.0000	0.0000
NBP[1]402*	0.0000	0.0000	0.0000	0.0000	0.0000	0.0000
NBP[1]428*	0.0000	0.0000	0.0000	0.0000	0.0000	0.0000
NBP[1]454*	0.0000	0.0000	0.0000	0.0000	0.0000	0.0000
NBP[1]480*	0.0000	0.0000	0.0000	0.0000	0.0000	0.0000
NBP[1]505*	0.0000	0.0000	0.0000	0.0000	0.0000	0.0000
NBP[1]531*	0.0000	0.0000	0.0000	0.0000	0.0000	0.0000
NBP[1]557*	0.0000	0.0000	0.0000	0.0000	0.0000	0.0000
NBP[1]582*	0.0000	0.0000	0.0000	0.0000	0.0000	0.0000
NBP[1]608*	0.0000	0.0000	0.0000	0.0000	0.0000	0.0000
NBP[1]634*	0.0000	0.0000	0.0000	0.0000	0.0000	0.0000
NBP[1]659*	0.0000	0.0000	0.0000	0.0000	0.0000	0.0000
NBP[1]685*	0.0000	0.0000	0.0000	0.0000	0.0000	0.0000
NBP[1]711*	0.0000	0.0000	0.0000	0.0000	0.0000	0.0000
NBP[1]736*	0.0000	0.0000	0.0000	0.0000	0.0000	0.0000
NBP[1]762*	0.0000	0.0000	0.0000	0.0000	0.0000	0.0000
NBP[1]788*	0.0000	0.0000	0.0000	0.0000	0.0000	0.0000

* Specified by user.

Material Stream: 9 (continued)

Fluid Package: Basis-1
Property Package: Peng-Robinson

COMPOSITION

Aqueous Phase (continued)

Phase Fraction 0.0000

COMPONENTS	MOLAR FLOW (kgmole/h)	MOLE FRACTION	MASS FLOW (tonne/d)	MASS FRACTION	LIQUID VOLUME FLOW (m3/h)	LIQUID VOLUME FRACTION
NBP[1]825*	0.0000	0.0000	0.0000	0.0000	0.0000	0.0000
NBP[1]873*	0.0000	0.0000	0.0000	0.0000	0.0000	0.0000
NBP[1]926*	0.0000	0.0000	0.0000	0.0000	0.0000	0.0000
NBP[1]978*	0.0000	0.0000	0.0000	0.0000	0.0000	0.0000
NBP[1]1021*	0.0000	0.0000	0.0000	0.0000	0.0000	0.0000
NBP[1]1075*	0.0000	0.0000	0.0000	0.0000	0.0000	0.0000
NBP[1]1123*	0.0000	0.0000	0.0000	0.0000	0.0000	0.0000
NBP[1]1173*	0.0000	0.0000	0.0000	0.0000	0.0000	0.0000
NBP[1]1250*	0.0000	0.0000	0.0000	0.0000	0.0000	0.0000
NBP[1]1339*	0.0000	0.0000	0.0000	0.0000	0.0000	0.0000
NBP[1]1432*	0.0000	0.0000	0.0000	0.0000	0.0000	0.0000
NBP[1]1528*	0.0000	0.0000	0.0000	0.0000	0.0000	0.0000
NBP[1]1637*	0.0000	0.0000	0.0000	0.0000	0.0000	0.0000
NBP[1]1732*	0.0000	0.0000	0.0000	0.0000	0.0000	0.0000
NBP[1]1819*	0.0000	0.0000	0.0000	0.0000	0.0000	0.0000
NBP[1]1913*	0.0000	0.0000	0.0000	0.0000	0.0000	0.0000
Total	0.0000	1.0000	0.0000	1.0000	0.0000	1.0000

Material Stream: 10

Fluid Package: Basis-1
Property Package: Peng-Robinson

CONDITIONS

		Overall	Vapour Phase	Liquid Phase	Liquid Phase
Vapour / Phase Fraction		0.4997	0.4997	0.0083	0.4920
Temperature:	(F)	109.7	109.7	109.7	109.7
Pressure:	(psig)	20.00 *	20.00	20.00	20.00
Molar Flow	(MMSCFD)	0.3795	0.1896	3.138e-003	0.1867
Mass Flow	(tonne/d)	51.02	7.359	2.602	41.06
Std Ideal Liq Vol Flow	(barrel/day)	436.6	103.6	16.34	316.6
Molar Enthalpy	(kJ/kgmole)	-2.579e+005	-1.042e+005	-1.463e+006	-3.938e+005
Molar Entropy	(kJ/kgmole-C)	251.9	185.0	1532	298.4
Heat Flow	(MMBtu/hr)	-4.620	-0.9326	-0.2167	-3.471
Liq Vol Flow @Std Cond	(barrel/day)	418.1 *	2.281e+004	16.56	314.3

PROPERTIES

		Overall	Vapour Phase	Liquid Phase	Liquid Phase
Molecular Weight		112.5	32.46	693.6	184.0
Molar Density	(kgmole/m3)	0.1811	9.251e-002	1.400	4.348
Mass Density	(kg/m3)	20.37	3.003	970.9	799.8
Act. Volume Flow	(barrel/day)	1.575e+004	1.541e+004	16.85	322.9
Mass Enthalpy	(kJ/kg)	-2293	-3209	-2109	-2141
Mass Entropy	(kJ/kg-C)	2.240	5.700	2.208	1.622
Heat Capacity	(kJ/kgmole-C)	223.3	60.02	1347	370.3
Mass Heat Capacity	(kJ/kg-C)	1.985	1.849	1.942	2.013
LHV Molar Basis (Std)	(Btu/SCF)	---	---	---	---
LHV Mass Basis (Std)	(kJ/kg)	---	---	---	---
Phase Fraction [Vol. Basis]		0.2374	0.2374	3.742e-002	0.7252
Phase Fraction [Mass Basis]		0.1442	0.1442	5.099e-002	0.8048
Partial Pressure of CO2	(psig)	-13.27	---	---	---
Cost Based on Flow	(Cost/s)	0.0000	0.0000	0.0000	0.0000
Act. Gas Flow	(ACT_m3/h)	102.1	102.1	---	---
Avg. Liq. Density	(kgmole/m3)	6.535	13.76	1.444	4.434
Specific Heat	(kJ/kgmole-C)	223.3	60.02	1347	370.3
Std. Gas Flow	(STD_m3/h)	446.9	223.3	3.696	219.9

* Specified by user.

Material Stream: 10 (continued)

Fluid Package: Basis-1
Property Package: Peng-Robinson

PROPERTIES

	Overall	Vapour Phase	Liquid Phase	Liquid Phase
Std. Ideal Liq. Mass Density (kg/m3)	735.0	446.6	1001	815.7
Act. Liq. Flow (barrel/day)	339.8	---	16.85	322.9
Z Factor	---	0.9832	6.498e-002	2.092e-002
Watson K	12.04	15.40	11.94	11.86
User Property	---	---	---	---
Partial Pressure of H2S (psig)	-14.70	---	---	---
Cp/(Cp - R)	1.039	1.161	1.006	1.023
Cp/Cv	1.021	1.173	1.131	1.170
Heat of Vap. (kJ/kgmole)	2.412e+005	---	---	---
Kinematic Viscosity (cSt)	---	3.617	2268	2.065
Liq. Mass Density (Std. Cond) (kg/m3)	767.6	2.029	988.3	821.8
Liq. Vol. Flow (Std. Cond) (barrel/day)	418.1	2.281e+004	16.56	314.3
Liquid Fraction	0.5003	0.0000	1.000	1.000
Molar Volume (m3/kgmole)	5.520	10.81	0.7144	0.2300
Mass Heat of Vap. (kJ/kg)	2145	---	---	---
Phase Fraction [Molar Basis]	0.4997	0.4997	0.0083	0.4920
Surface Tension (dyne/cm)	---	---	25.44	21.65
Thermal Conductivity (W/m-K)	---	2.602e-002	0.1347	0.1124
Viscosity (cP)	---	1.086e-002	2202	1.652
Cv (Semi-Ideal) (kJ/kgmole-C)	215.0	51.70	1339	---
Mass Cv (Semi-Ideal) (kJ/kg-C)	1.912	1.593	1.930	---
Cv (kJ/kgmole-C)	218.8	51.15	1191	---
Mass Cv (kJ/kg-C)	1.946	1.576	1.717	---
Cv (Ent. Method) (kJ/kgmole-C)	---	---	1266	---
Mass Cv (Ent. Method) (kJ/kg-C)	---	---	1.825	---
Cp/Cv (Ent. Method)	---	---	1.064	---
Reid VP at 37.8 C (psig)	201.9	968.2	-8.570	-2.999
True VP at 37.8 C (psig)	1094	1620	18.21	17.76
Liq. Vol. Flow - Sum(Std. Cond) (barrel/day)	2.283e+004	2.281e+004	16.56	0.0000
HHV Molar Basis (Std) (Btu/SCF)	---	---	---	---
HHV Mass Basis (Std) (kJ/kg)	---	---	---	---
CO2 Loading	---	---	---	---
CO2 App ML Con (kgmole/m3)	---	---	1.969e-003	5.083e-003
CO2 App WT Con (kgmol/kg)	---	---	2.028e-006	6.356e-006
Phase Fraction [Act. Vol. Basis]	0.9784	0.9784	1.070e-003	2.050e-002
Mass Exergy (kJ/kg)	10.65	---	---	---
Viscosity Index	17.48	---	---	---
Ideal Gas Cp/Cv	1.047	1.163	1.007	1.029
Ideal Gas Cp (kJ/kgmole-C)	186.1	59.39	1129	299.0
Mass Ideal Gas Cp (kJ/kg-C)	1.655	1.830	1.628	1.625
Bubble Point Pressure (psig)	1134	---	---	---

COMPOSITION

Overall Phase

Vapour Fraction 0.4997

COMPONENTS	MOLAR FLOW (kgmole/h)	MOLE FRACTION	MASS FLOW (tonne/d)	MASS FRACTION	LIQUID VOLUME FLOW (m3/h)	LIQUID VOLUME FRACTION
Methane	4.4834	0.2372	1.7262	0.0338	0.2402	0.0831
Ethane	1.6120	0.0853	1.1633	0.0228	0.1363	0.0471
Propane	1.6831	0.0890	1.7813	0.0349	0.1465	0.0506
i-Butane	0.3565	0.0189	0.4973	0.0097	0.0369	0.0127
n-Butane	0.8171	0.0432	1.1398	0.0223	0.0814	0.0282
i-Pentane	0.2628	0.0139	0.4551	0.0089	0.0304	0.0105
n-Pentane	0.3324	0.0176	0.5757	0.0113	0.0381	0.0132
n-Hexane	0.7549	0.0399	1.5614	0.0306	0.0982	0.0339
Nitrogen	0.0653	0.0035	0.0439	0.0009	0.0023	0.0008
CO2	0.4004	0.0212	0.4229	0.0083	0.0213	0.0074

* Specified by user.

Material Stream: 10 (continued)

Fluid Package: Basis-1
Property Package: Peng-Robinson

COMPOSITION

Overall Phase (continued)

Vapour Fraction 0.4997

COMPONENTS	MOLAR FLOW (kgmole/h)	MOLE FRACTION	MASS FLOW (tonne/d)	MASS FRACTION	LIQUID VOLUME FLOW (m3/h)	LIQUID VOLUME FRACTION
H2S	0.0000	0.0000	0.0000	0.0000	0.0000	0.0000
H2O	0.0359	0.0019	0.0155	0.0003	0.0006	0.0002
NBP[1]95*	0.0998	0.0053	0.1627	0.0032	0.0100	0.0034
NBP[1]121*	0.1395	0.0074	0.2439	0.0048	0.0148	0.0051
NBP[1]147*	0.2100	0.0111	0.4041	0.0079	0.0240	0.0083
NBP[1]171*	0.4597	0.0243	0.9672	0.0190	0.0566	0.0196
NBP[1]195*	0.6777	0.0359	1.5220	0.0298	0.0881	0.0304
NBP[1]222*	0.5672	0.0300	1.3699	0.0268	0.0783	0.0271
NBP[1]248*	0.5160	0.0273	1.3399	0.0263	0.0757	0.0262
NBP[1]273*	0.4453	0.0236	1.2368	0.0242	0.0690	0.0239
NBP[1]299*	0.3669	0.0194	1.0864	0.0213	0.0600	0.0207
NBP[1]325*	0.2765	0.0146	0.8699	0.0170	0.0476	0.0164
NBP[1]351*	0.2310	0.0122	0.7723	0.0151	0.0418	0.0145
NBP[1]377*	0.2158	0.0114	0.7696	0.0151	0.0412	0.0143
NBP[1]402*	0.2007	0.0106	0.7634	0.0150	0.0405	0.0140
NBP[1]428*	0.1928	0.0102	0.7823	0.0153	0.0411	0.0142
NBP[1]454*	0.1935	0.0102	0.8391	0.0164	0.0436	0.0151
NBP[1]480*	0.1969	0.0104	0.9122	0.0179	0.0470	0.0162
NBP[1]505*	0.1912	0.0101	0.9446	0.0185	0.0482	0.0167
NBP[1]531*	0.1848	0.0098	0.9717	0.0190	0.0491	0.0170
NBP[1]557*	0.1782	0.0094	0.9965	0.0195	0.0499	0.0173
NBP[1]582*	0.1704	0.0090	1.0124	0.0198	0.0503	0.0174
NBP[1]608*	0.1642	0.0087	1.0346	0.0203	0.0510	0.0176
NBP[1]634*	0.1611	0.0085	1.0751	0.0211	0.0525	0.0182
NBP[1]659*	0.1586	0.0084	1.1193	0.0219	0.0543	0.0188
NBP[1]685*	0.1641	0.0087	1.2227	0.0240	0.0588	0.0203
NBP[1]711*	0.1715	0.0091	1.3444	0.0263	0.0642	0.0222
NBP[1]736*	0.1697	0.0090	1.3915	0.0273	0.0659	0.0228
NBP[1]762*	0.1653	0.0087	1.4214	0.0279	0.0669	0.0231
NBP[1]788*	0.1585	0.0084	1.4424	0.0283	0.0674	0.0233
NBP[1]825*	0.2655	0.0140	2.5963	0.0509	0.1201	0.0415
NBP[1]873*	0.1830	0.0097	1.9404	0.0380	0.0887	0.0307
NBP[1]926*	0.1437	0.0076	1.6472	0.0323	0.0744	0.0257
NBP[1]978*	0.1474	0.0078	1.8524	0.0363	0.0825	0.0285
NBP[1]1021*	0.0728	0.0039	0.9655	0.0189	0.0426	0.0147
NBP[1]1075*	0.0449	0.0024	0.6310	0.0124	0.0276	0.0095
NBP[1]1123*	0.0417	0.0022	0.6267	0.0123	0.0271	0.0094
NBP[1]1173*	0.0300	0.0016	0.4772	0.0094	0.0205	0.0071
NBP[1]1250*	0.0393	0.0021	0.6767	0.0133	0.0287	0.0099
NBP[1]1339*	0.0364	0.0019	0.6999	0.0137	0.0291	0.0101
NBP[1]1432*	0.0257	0.0014	0.5397	0.0106	0.0221	0.0077
NBP[1]1528*	0.0180	0.0010	0.4082	0.0080	0.0165	0.0057
NBP[1]1637*	0.0127	0.0007	0.3047	0.0060	0.0122	0.0042
NBP[1]1732*	0.0101	0.0005	0.2548	0.0050	0.0101	0.0035
NBP[1]1819*	0.0000	0.0000	0.0000	0.0000	0.0000	0.0000
NBP[1]1913*	0.0000	0.0000	0.0000	0.0000	0.0000	0.0000
Total	18.9020	1.0000	51.0219	1.0000	2.8923	1.0000

Vapour Phase

Phase Fraction 0.4997

COMPONENTS	MOLAR FLOW (kgmole/h)	MOLE FRACTION	MASS FLOW (tonne/d)	MASS FRACTION	LIQUID VOLUME FLOW (m3/h)	LIQUID VOLUME FRACTION
Methane	4.4374	0.4698	1.7085	0.2322	0.2378	0.3463
Ethane	1.5387	0.1629	1.1105	0.1509	0.1301	0.1895
Propane	1.4603	0.1546	1.5454	0.2100	0.1271	0.1851

* Specified by user.

Material Stream: 10 (continued)

Fluid Package: Basis-1
Property Package: Peng-Robinson

COMPOSITION

Vapour Phase (continued)

Phase Fraction 0.4997

COMPONENTS	MOLAR FLOW (kgmole/h)	MOLE FRACTION	MASS FLOW (tonne/d)	MASS FRACTION	LIQUID VOLUME FLOW (m3/h)	LIQUID VOLUME FRACTION
i-Butane	0.2610	0.0276	0.3640	0.0495	0.0270	0.0393
n-Butane	0.5472	0.0579	0.7633	0.1037	0.0545	0.0794
i-Pentane	0.1204	0.0127	0.2084	0.0283	0.0139	0.0203
n-Pentane	0.1317	0.0139	0.2281	0.0310	0.0151	0.0220
n-Hexane	0.1352	0.0143	0.2796	0.0380	0.0176	0.0256
Nitrogen	0.0650	0.0069	0.0437	0.0059	0.0023	0.0033
CO2	0.3893	0.0412	0.4112	0.0559	0.0208	0.0302
H2S	0.0000	0.0000	0.0000	0.0000	0.0000	0.0000
H2O	0.0349	0.0037	0.0151	0.0021	0.0006	0.0009
NBP[1]95*	0.0403	0.0043	0.0657	0.0089	0.0040	0.0059
NBP[1]121*	0.0421	0.0045	0.0736	0.0100	0.0045	0.0065
NBP[1]147*	0.0446	0.0047	0.0858	0.0117	0.0051	0.0074
NBP[1]171*	0.0671	0.0071	0.1411	0.0192	0.0083	0.0120
NBP[1]195*	0.0655	0.0069	0.1470	0.0200	0.0085	0.0124
NBP[1]222*	0.0323	0.0034	0.0779	0.0106	0.0045	0.0065
NBP[1]248*	0.0172	0.0018	0.0447	0.0061	0.0025	0.0037
NBP[1]273*	0.0085	0.0009	0.0236	0.0032	0.0013	0.0019
NBP[1]299*	0.0039	0.0004	0.0116	0.0016	0.0006	0.0009
NBP[1]325*	0.0016	0.0002	0.0050	0.0007	0.0003	0.0004
NBP[1]351*	0.0007	0.0001	0.0023	0.0003	0.0001	0.0002
NBP[1]377*	0.0003	0.0000	0.0012	0.0002	0.0001	0.0001
NBP[1]402*	0.0001	0.0000	0.0006	0.0001	0.0000	0.0000
NBP[1]428*	0.0001	0.0000	0.0003	0.0000	0.0000	0.0000
NBP[1]454*	0.0000	0.0000	0.0001	0.0000	0.0000	0.0000
NBP[1]480*	0.0000	0.0000	0.0001	0.0000	0.0000	0.0000
NBP[1]505*	0.0000	0.0000	0.0000	0.0000	0.0000	0.0000
NBP[1]531*	0.0000	0.0000	0.0000	0.0000	0.0000	0.0000
NBP[1]557*	0.0000	0.0000	0.0000	0.0000	0.0000	0.0000
NBP[1]582*	0.0000	0.0000	0.0000	0.0000	0.0000	0.0000
NBP[1]608*	0.0000	0.0000	0.0000	0.0000	0.0000	0.0000
NBP[1]634*	0.0000	0.0000	0.0000	0.0000	0.0000	0.0000
NBP[1]659*	0.0000	0.0000	0.0000	0.0000	0.0000	0.0000
NBP[1]685*	0.0000	0.0000	0.0000	0.0000	0.0000	0.0000
NBP[1]711*	0.0000	0.0000	0.0000	0.0000	0.0000	0.0000
NBP[1]736*	0.0000	0.0000	0.0000	0.0000	0.0000	0.0000
NBP[1]762*	0.0000	0.0000	0.0000	0.0000	0.0000	0.0000
NBP[1]788*	0.0000	0.0000	0.0000	0.0000	0.0000	0.0000
NBP[1]825*	0.0000	0.0000	0.0000	0.0000	0.0000	0.0000
NBP[1]873*	0.0000	0.0000	0.0000	0.0000	0.0000	0.0000
NBP[1]926*	0.0000	0.0000	0.0000	0.0000	0.0000	0.0000
NBP[1]978*	0.0000	0.0000	0.0000	0.0000	0.0000	0.0000
NBP[1]1021*	0.0000	0.0000	0.0000	0.0000	0.0000	0.0000
NBP[1]1075*	0.0000	0.0000	0.0000	0.0000	0.0000	0.0000
NBP[1]1123*	0.0000	0.0000	0.0000	0.0000	0.0000	0.0000
NBP[1]1173*	0.0000	0.0000	0.0000	0.0000	0.0000	0.0000
NBP[1]1250*	0.0000	0.0000	0.0000	0.0000	0.0000	0.0000
NBP[1]1339*	0.0000	0.0000	0.0000	0.0000	0.0000	0.0000
NBP[1]1432*	0.0000	0.0000	0.0000	0.0000	0.0000	0.0000
NBP[1]1528*	0.0000	0.0000	0.0000	0.0000	0.0000	0.0000
NBP[1]1637*	0.0000	0.0000	0.0000	0.0000	0.0000	0.0000
NBP[1]1732*	0.0000	0.0000	0.0000	0.0000	0.0000	0.0000
NBP[1]1819*	0.0000	0.0000	0.0000	0.0000	0.0000	0.0000
NBP[1]1913*	0.0000	0.0000	0.0000	0.0000	0.0000	0.0000
Total	9.4453	1.0000	7.3585	1.0000	0.6865	1.0000

* Specified by user.

Material Stream: 10 (continued)

Fluid Package: Basis-1
Property Package: Peng-Robinson

COMPOSITION

Liquid Phase

Phase Fraction 8.269e-003

COMPONENTS	MOLAR FLOW (kgmole/h)	MOLE FRACTION	MASS FLOW (tonne/d)	MASS FRACTION	LIQUID VOLUME FLOW (m3/h)	LIQUID VOLUME FRACTION
Methane	0.0009	0.0059	0.0004	0.0001	0.0000	0.0005
Ethane	0.0010	0.0062	0.0007	0.0003	0.0001	0.0008
Propane	0.0023	0.0146	0.0024	0.0009	0.0002	0.0018
i-Butane	0.0009	0.0055	0.0012	0.0005	0.0001	0.0008
n-Butane	0.0022	0.0140	0.0030	0.0012	0.0002	0.0020
i-Pentane	0.0010	0.0065	0.0018	0.0007	0.0001	0.0011
n-Pentane	0.0013	0.0085	0.0023	0.0009	0.0002	0.0014
n-Hexane	0.0035	0.0223	0.0072	0.0028	0.0005	0.0042
Nitrogen	0.0000	0.0001	0.0000	0.0000	0.0000	0.0000
CO2	0.0002	0.0014	0.0002	0.0001	0.0000	0.0001
H2S	0.0000	0.0000	0.0000	0.0000	0.0000	0.0000
H2O	0.0000	0.0001	0.0000	0.0000	0.0000	0.0000
NBP[1]95*	0.0004	0.0025	0.0006	0.0002	0.0000	0.0004
NBP[1]121*	0.0006	0.0037	0.0010	0.0004	0.0001	0.0006
NBP[1]147*	0.0009	0.0058	0.0017	0.0007	0.0001	0.0010
NBP[1]171*	0.0020	0.0125	0.0041	0.0016	0.0002	0.0022
NBP[1]195*	0.0028	0.0182	0.0064	0.0024	0.0004	0.0034
NBP[1]222*	0.0023	0.0147	0.0055	0.0021	0.0003	0.0029
NBP[1]248*	0.0020	0.0127	0.0052	0.0020	0.0003	0.0027
NBP[1]273*	0.0016	0.0104	0.0045	0.0017	0.0003	0.0023
NBP[1]299*	0.0013	0.0081	0.0037	0.0014	0.0002	0.0019
NBP[1]325*	0.0009	0.0057	0.0028	0.0011	0.0002	0.0014
NBP[1]351*	0.0007	0.0045	0.0023	0.0009	0.0001	0.0012
NBP[1]377*	0.0006	0.0039	0.0022	0.0008	0.0001	0.0011
NBP[1]402*	0.0005	0.0034	0.0020	0.0008	0.0001	0.0010
NBP[1]428*	0.0005	0.0031	0.0019	0.0007	0.0001	0.0009
NBP[1]454*	0.0004	0.0029	0.0019	0.0007	0.0001	0.0009
NBP[1]480*	0.0004	0.0027	0.0020	0.0008	0.0001	0.0009
NBP[1]505*	0.0004	0.0025	0.0019	0.0007	0.0001	0.0009
NBP[1]531*	0.0004	0.0023	0.0019	0.0007	0.0001	0.0009
NBP[1]557*	0.0003	0.0021	0.0018	0.0007	0.0001	0.0008
NBP[1]582*	0.0003	0.0019	0.0018	0.0007	0.0001	0.0008
NBP[1]608*	0.0003	0.0017	0.0017	0.0007	0.0001	0.0008
NBP[1]634*	0.0003	0.0016	0.0017	0.0007	0.0001	0.0008
NBP[1]659*	0.0002	0.0016	0.0017	0.0007	0.0001	0.0008
NBP[1]685*	0.0002	0.0016	0.0018	0.0007	0.0001	0.0008
NBP[1]711*	0.0002	0.0016	0.0019	0.0007	0.0001	0.0009
NBP[1]736*	0.0002	0.0016	0.0020	0.0008	0.0001	0.0009
NBP[1]762*	0.0002	0.0015	0.0021	0.0008	0.0001	0.0009
NBP[1]788*	0.0002	0.0015	0.0021	0.0008	0.0001	0.0009
NBP[1]825*	0.0004	0.0027	0.0041	0.0016	0.0002	0.0018
NBP[1]873*	0.0003	0.0022	0.0036	0.0014	0.0002	0.0015
NBP[1]926*	0.0004	0.0023	0.0041	0.0016	0.0002	0.0017
NBP[1]978*	0.0005	0.0031	0.0061	0.0024	0.0003	0.0025
NBP[1]1021*	0.0004	0.0024	0.0050	0.0019	0.0002	0.0020
NBP[1]1075*	0.0005	0.0032	0.0069	0.0027	0.0003	0.0028
NBP[1]1123*	0.0010	0.0061	0.0144	0.0055	0.0006	0.0057
NBP[1]1173*	0.0020	0.0126	0.0313	0.0120	0.0013	0.0124
NBP[1]1250*	0.0157	0.1007	0.2710	0.1042	0.0115	0.1061
NBP[1]1339*	0.0342	0.2189	0.6581	0.2529	0.0274	0.2531
NBP[1]1432*	0.0257	0.1642	0.5395	0.2074	0.0221	0.2044
NBP[1]1528*	0.0180	0.1153	0.4082	0.1569	0.0165	0.1526
NBP[1]1637*	0.0127	0.0810	0.3047	0.1171	0.0122	0.1125
NBP[1]1732*	0.0101	0.0644	0.2548	0.0980	0.0101	0.0931

* Specified by user.

Material Stream: 10 (continued)

Fluid Package: Basis-1
Property Package: Peng-Robinson

COMPOSITION

Liquid Phase (continued)

Phase Fraction 8.269e-003

COMPONENTS	MOLAR FLOW (kgmole/h)	MOLE FRACTION	MASS FLOW (tonne/d)	MASS FRACTION	LIQUID VOLUME FLOW (m3/h)	LIQUID VOLUME FRACTION
NBP[1]1819*	0.0000	0.0000	0.0000	0.0000	0.0000	0.0000
NBP[1]1913*	0.0000	0.0000	0.0000	0.0000	0.0000	0.0000
Total	0.1563	1.0000	2.6017	1.0000	0.1082	1.0000

Liquid Phase

Phase Fraction 0.4920

COMPONENTS	MOLAR FLOW (kgmole/h)	MOLE FRACTION	MASS FLOW (tonne/d)	MASS FRACTION	LIQUID VOLUME FLOW (m3/h)	LIQUID VOLUME FRACTION
Methane	0.0451	0.0049	0.0174	0.0004	0.0024	0.0012
Ethane	0.0723	0.0078	0.0522	0.0013	0.0061	0.0029
Propane	0.2206	0.0237	0.2335	0.0057	0.0192	0.0092
i-Butane	0.0947	0.0102	0.1320	0.0032	0.0098	0.0047
n-Butane	0.2677	0.0288	0.3734	0.0091	0.0267	0.0127
i-Pentane	0.1414	0.0152	0.2449	0.0060	0.0164	0.0078
n-Pentane	0.1994	0.0214	0.3453	0.0084	0.0228	0.0109
n-Hexane	0.6163	0.0663	1.2746	0.0310	0.0801	0.0382
Nitrogen	0.0003	0.0000	0.0002	0.0000	0.0000	0.0000
CO2	0.0109	0.0012	0.0115	0.0003	0.0006	0.0003
H2S	0.0000	0.0000	0.0000	0.0000	0.0000	0.0000
H2O	0.0010	0.0001	0.0004	0.0000	0.0000	0.0000
NBP[1]95*	0.0591	0.0064	0.0964	0.0023	0.0059	0.0028
NBP[1]121*	0.0968	0.0104	0.1693	0.0041	0.0102	0.0049
NBP[1]147*	0.1645	0.0177	0.3166	0.0077	0.0188	0.0090
NBP[1]171*	0.3906	0.0420	0.8220	0.0200	0.0481	0.0229
NBP[1]195*	0.6094	0.0655	1.3686	0.0333	0.0792	0.0378
NBP[1]222*	0.5326	0.0573	1.2865	0.0313	0.0735	0.0351
NBP[1]248*	0.4968	0.0534	1.2901	0.0314	0.0728	0.0347
NBP[1]273*	0.4352	0.0468	1.2087	0.0294	0.0675	0.0322
NBP[1]299*	0.3617	0.0389	1.0710	0.0261	0.0591	0.0282
NBP[1]325*	0.2741	0.0295	0.8621	0.0210	0.0471	0.0225
NBP[1]351*	0.2296	0.0247	0.7677	0.0187	0.0416	0.0198
NBP[1]377*	0.2149	0.0231	0.7663	0.0187	0.0411	0.0196
NBP[1]402*	0.2001	0.0215	0.7609	0.0185	0.0404	0.0192
NBP[1]428*	0.1923	0.0207	0.7801	0.0190	0.0410	0.0195
NBP[1]454*	0.1930	0.0208	0.8370	0.0204	0.0435	0.0207
NBP[1]480*	0.1964	0.0211	0.9102	0.0222	0.0469	0.0223
NBP[1]505*	0.1908	0.0205	0.9427	0.0230	0.0481	0.0229
NBP[1]531*	0.1844	0.0198	0.9699	0.0236	0.0490	0.0234
NBP[1]557*	0.1778	0.0191	0.9947	0.0242	0.0498	0.0238
NBP[1]582*	0.1702	0.0183	1.0106	0.0246	0.0502	0.0239
NBP[1]608*	0.1639	0.0176	1.0329	0.0252	0.0509	0.0243
NBP[1]634*	0.1608	0.0173	1.0734	0.0261	0.0525	0.0250
NBP[1]659*	0.1584	0.0170	1.1176	0.0272	0.0542	0.0258
NBP[1]685*	0.1639	0.0176	1.2208	0.0297	0.0587	0.0280
NBP[1]711*	0.1713	0.0184	1.3425	0.0327	0.0641	0.0305
NBP[1]736*	0.1695	0.0182	1.3895	0.0338	0.0658	0.0314
NBP[1]762*	0.1651	0.0177	1.4194	0.0346	0.0668	0.0318
NBP[1]788*	0.1582	0.0170	1.4402	0.0351	0.0673	0.0321
NBP[1]825*	0.2650	0.0285	2.5922	0.0631	0.1199	0.0572
NBP[1]873*	0.1826	0.0196	1.9368	0.0472	0.0886	0.0422
NBP[1]926*	0.1434	0.0154	1.6431	0.0400	0.0743	0.0354
NBP[1]978*	0.1469	0.0158	1.8463	0.0450	0.0822	0.0392
NBP[1]1021*	0.0724	0.0078	0.9605	0.0234	0.0424	0.0202
NBP[1]1075*	0.0444	0.0048	0.6241	0.0152	0.0273	0.0130
NBP[1]1123*	0.0408	0.0044	0.6124	0.0149	0.0265	0.0126

* Specified by user.

Material Stream: 10 (continued)

Fluid Package: Basis-1
Property Package: Peng-Robinson

COMPOSITION

Liquid Phase (continued)

Phase Fraction 0.4920

COMPONENTS	MOLAR FLOW (kgmole/h)	MOLE FRACTION	MASS FLOW (tonne/d)	MASS FRACTION	LIQUID VOLUME FLOW (m3/h)	LIQUID VOLUME FRACTION
NBP[1]1173*	0.0280	0.0030	0.4458	0.0109	0.0191	0.0091
NBP[1]1250*	0.0236	0.0025	0.4056	0.0099	0.0172	0.0082
NBP[1]1339*	0.0022	0.0002	0.0418	0.0010	0.0017	0.0008
NBP[1]1432*	0.0000	0.0000	0.0002	0.0000	0.0000	0.0000
NBP[1]1528*	0.0000	0.0000	0.0000	0.0000	0.0000	0.0000
NBP[1]1637*	0.0000	0.0000	0.0000	0.0000	0.0000	0.0000
NBP[1]1732*	0.0000	0.0000	0.0000	0.0000	0.0000	0.0000
NBP[1]1819*	0.0000	0.0000	0.0000	0.0000	0.0000	0.0000
NBP[1]1913*	0.0000	0.0000	0.0000	0.0000	0.0000	0.0000
Total	9.3004	1.0000	41.0617	1.0000	2.0976	1.0000

Material Stream: 11

Fluid Package: Basis-1
Property Package: Peng-Robinson

CONDITIONS

		Overall	Vapour Phase	Liquid Phase	Liquid Phase
Vapour / Phase Fraction		0.0000	0.0000	0.0165	0.9835
Temperature:	(F)	109.7	109.7	109.7	109.7
Pressure:	(psig)	20.00	20.00	20.00	20.00
Molar Flow	(MMSCFD)	0.1899	0.0000	3.138e-003	0.1867
Mass Flow	(tonne/d)	43.66	0.0000	2.602	41.06
Std Ideal Liq Vol Flow	(barrel/day)	333.0	0.0000	16.34	316.6
Molar Enthalpy	(kJ/kgmole)	-4.114e+005	-1.042e+005	-1.463e+006	-3.938e+005
Molar Entropy	(kJ/kgmole-C)	318.8	185.0	1532	298.4
Heat Flow	(MMBtu/hr)	-3.688	0.0000	-0.2167	-3.471
Liq Vol Flow @Std Cond	(barrel/day)	331.1 *	0.0000	16.56	314.3

PROPERTIES

		Overall	Vapour Phase	Liquid Phase	Liquid Phase
Molecular Weight		192.4	32.46	693.6	184.0
Molar Density	(kgmole/m3)	4.201	9.251e-002	1.400	4.348
Mass Density	(kg/m3)	808.3	3.003	970.9	799.8
Act. Volume Flow	(barrel/day)	339.8	0.0000	16.85	322.9
Mass Enthalpy	(kJ/kg)	-2139	-3209	-2109	-2141
Mass Entropy	(kJ/kg-C)	1.657	5.700	2.208	1.622
Heat Capacity	(kJ/kgmole-C)	386.4	60.02	1347	370.3
Mass Heat Capacity	(kJ/kg-C)	2.009	1.849	1.942	2.013
LHV Molar Basis (Std)	(Btu/SCF)	---	---	---	---
LHV Mass Basis (Std)	(kJ/kg)	---	---	---	---
Phase Fraction [Vol. Basis]		---	---	4.907e-002	0.9509
Phase Fraction [Mass Basis]		0.0000	0.0000	5.958e-002	0.9404
Partial Pressure of CO2	(psig)	-14.70	---	---	---
Cost Based on Flow	(Cost/s)	0.0000	0.0000	0.0000	0.0000
Act. Gas Flow	(ACT_m3/h)	---	---	---	---
Avg. Liq. Density	(kgmole/m3)	4.287	13.76	1.444	4.434
Specific Heat	(kJ/kgmole-C)	386.4	60.02	1347	370.3
Std. Gas Flow	(STD_m3/h)	223.6	0.0000	3.696	219.9
Std. Ideal Liq. Mass Density	(kg/m3)	824.8	446.6	1001	815.7
Act. Liq. Flow	(barrel/day)	339.8	---	16.85	322.9
Z Factor		---	0.9832	6.498e-002	2.092e-002
Watson K		11.83	15.40	11.94	11.86
User Property		---	---	---	---
Partial Pressure of H2S	(psig)	-14.70	---	---	---
Cp/(Cp - R)		1.022	1.161	1.006	1.023

* Specified by user.

Material Stream: 11 (continued)

Fluid Package: Basis-1
Property Package: Peng-Robinson

PROPERTIES

	Overall	Vapour Phase	Liquid Phase	Liquid Phase
Cp/Cv	1.167	1.173	1.131	1.170
Heat of Vap. (kJ/kgmole)	3.652e+005	---	---	---
Kinematic Viscosity (cSt)	2.536	3.617	2268	2.065
Liq. Mass Density (Std. Cond) (kg/m3)	829.5	2.029	988.3	821.8
Liq. Vol. Flow (Std. Cond) (barrel/day)	331.1	0.0000	16.56	314.3
Liquid Fraction	1.000	0.0000	1.000	1.000
Molar Volume (m3/kgmole)	0.2380	10.81	0.7144	0.2300
Mass Heat of Vap. (kJ/kg)	1898	---	---	---
Phase Fraction [Molar Basis]	0.0000	0.0000	0.0165	0.9835
Surface Tension (dyne/cm)	---	---	25.44	21.65
Thermal Conductivity (W/m-K)	0.1134	2.602e-002	0.1347	0.1124
Viscosity (cP)	2.536	1.086e-002	2202	1.652
Cv (Semi-Ideal) (kJ/kgmole-C)	378.1	51.70	1339	---
Mass Cv (Semi-Ideal) (kJ/kg-C)	1.965	1.593	1.930	---
Cv (kJ/kgmole-C)	331.1	51.15	1191	---
Mass Cv (kJ/kg-C)	1.721	1.576	1.717	---
Cv (Ent. Method) (kJ/kgmole-C)	---	---	1266	---
Mass Cv (Ent. Method) (kJ/kg-C)	---	---	1.826	---
Cp/Cv (Ent. Method)	---	---	1.064	---
Reid VP at 37.8 C (psig)	-3.160	968.2	-8.570	-2.999
True VP at 37.8 C (psig)	17.27	1620	18.21	17.76
Liq. Vol. Flow - Sum(Std. Cond) (barrel/day)	16.56	0.0000	16.56	0.0000
HHV Molar Basis (Std) (Btu/SCF)	---	---	---	---
HHV Mass Basis (Std) (kJ/kg)	---	---	---	---
CO2 Loading	---	---	---	---
CO2 App ML Con (kgmole/m3)	4.929e-003	---	1.969e-003	5.083e-003
CO2 App WT Con (kgmol/kg)	6.098e-006	---	2.028e-006	6.356e-006
Phase Fraction [Act. Vol. Basis]	0.0000	0.0000	4.961e-002	0.9504
Mass Exergy (kJ/kg)	1.305	---	---	---
Viscosity Index	13.42	---	---	---
Ideal Gas Cp/Cv	1.027	1.163	1.007	1.029
Ideal Gas Cp (kJ/kgmole-C)	312.7	59.39	1129	299.0
Mass Ideal Gas Cp (kJ/kg-C)	1.626	1.830	1.628	1.625
Bubble Point Pressure (psig)	19.48	---	---	---

COMPOSITION

Overall Phase

Vapour Fraction 0.0000

COMPONENTS	MOLAR FLOW (kgmole/h)	MOLE FRACTION	MASS FLOW (tonne/d)	MASS FRACTION	LIQUID VOLUME FLOW (m3/h)	LIQUID VOLUME FRACTION
Methane	0.0460	0.0049	0.0177	0.0004	0.0025	0.0011
Ethane	0.0733	0.0077	0.0529	0.0012	0.0062	0.0028
Propane	0.2229	0.0236	0.2359	0.0054	0.0194	0.0088
i-Butane	0.0955	0.0101	0.1332	0.0031	0.0099	0.0045
n-Butane	0.2699	0.0285	0.3765	0.0086	0.0269	0.0122
i-Pentane	0.1424	0.0151	0.2467	0.0056	0.0165	0.0075
n-Pentane	0.2007	0.0212	0.3476	0.0080	0.0230	0.0104
n-Hexane	0.6197	0.0655	1.2818	0.0294	0.0806	0.0365
Nitrogen	0.0003	0.0000	0.0002	0.0000	0.0000	0.0000
CO2	0.0111	0.0012	0.0117	0.0003	0.0006	0.0003
H2S	0.0000	0.0000	0.0000	0.0000	0.0000	0.0000
H2O	0.0010	0.0001	0.0004	0.0000	0.0000	0.0000
NBP[1]95*	0.0595	0.0063	0.0970	0.0022	0.0059	0.0027
NBP[1]121*	0.0974	0.0103	0.1703	0.0039	0.0103	0.0047
NBP[1]147*	0.1654	0.0175	0.3183	0.0073	0.0189	0.0086
NBP[1]171*	0.3926	0.0415	0.8261	0.0189	0.0484	0.0219
NBP[1]195*	0.6122	0.0647	1.3750	0.0315	0.0796	0.0361

* Specified by user.

Material Stream: 11 (continued)

Fluid Package: Basis-1
Property Package: Peng-Robinson

COMPOSITION

Overall Phase (continued)

Vapour Fraction 0.0000

COMPONENTS	MOLAR FLOW (kgmole/h)	MOLE FRACTION	MASS FLOW (tonne/d)	MASS FRACTION	LIQUID VOLUME FLOW (m3/h)	LIQUID VOLUME FRACTION
NBP[1]222*	0.5349	0.0566	1.2920	0.0296	0.0738	0.0335
NBP[1]248*	0.4987	0.0527	1.2953	0.0297	0.0731	0.0332
NBP[1]273*	0.4368	0.0462	1.2132	0.0278	0.0677	0.0307
NBP[1]299*	0.3630	0.0384	1.0748	0.0246	0.0594	0.0269
NBP[1]325*	0.2749	0.0291	0.8649	0.0198	0.0473	0.0214
NBP[1]351*	0.2303	0.0243	0.7700	0.0176	0.0417	0.0189
NBP[1]377*	0.2155	0.0228	0.7685	0.0176	0.0412	0.0187
NBP[1]402*	0.2006	0.0212	0.7629	0.0175	0.0405	0.0183
NBP[1]428*	0.1927	0.0204	0.7820	0.0179	0.0411	0.0186
NBP[1]454*	0.1935	0.0205	0.8390	0.0192	0.0436	0.0198
NBP[1]480*	0.1969	0.0208	0.9122	0.0209	0.0470	0.0213
NBP[1]505*	0.1912	0.0202	0.9446	0.0216	0.0482	0.0218
NBP[1]531*	0.1848	0.0195	0.9717	0.0223	0.0491	0.0223
NBP[1]557*	0.1782	0.0188	0.9965	0.0228	0.0499	0.0226
NBP[1]582*	0.1704	0.0180	1.0124	0.0232	0.0503	0.0228
NBP[1]608*	0.1642	0.0174	1.0346	0.0237	0.0510	0.0231
NBP[1]634*	0.1611	0.0170	1.0751	0.0246	0.0525	0.0238
NBP[1]659*	0.1586	0.0168	1.1193	0.0256	0.0543	0.0246
NBP[1]685*	0.1641	0.0174	1.2227	0.0280	0.0588	0.0267
NBP[1]711*	0.1715	0.0181	1.3444	0.0308	0.0642	0.0291
NBP[1]736*	0.1697	0.0179	1.3915	0.0319	0.0659	0.0299
NBP[1]762*	0.1653	0.0175	1.4214	0.0326	0.0669	0.0303
NBP[1]788*	0.1585	0.0168	1.4424	0.0330	0.0674	0.0305
NBP[1]825*	0.2655	0.0281	2.5963	0.0595	0.1201	0.0545
NBP[1]873*	0.1830	0.0193	1.9404	0.0444	0.0887	0.0402
NBP[1]926*	0.1437	0.0152	1.6472	0.0377	0.0744	0.0337
NBP[1]978*	0.1474	0.0156	1.8524	0.0424	0.0825	0.0374
NBP[1]1021*	0.0728	0.0077	0.9655	0.0221	0.0426	0.0193
NBP[1]1075*	0.0449	0.0048	0.6310	0.0145	0.0276	0.0125
NBP[1]1123*	0.0417	0.0044	0.6267	0.0144	0.0271	0.0123
NBP[1]1173*	0.0300	0.0032	0.4772	0.0109	0.0205	0.0093
NBP[1]1250*	0.0393	0.0042	0.6767	0.0155	0.0287	0.0130
NBP[1]1339*	0.0364	0.0038	0.6999	0.0160	0.0291	0.0132
NBP[1]1432*	0.0257	0.0027	0.5397	0.0124	0.0221	0.0100
NBP[1]1528*	0.0180	0.0019	0.4082	0.0093	0.0165	0.0075
NBP[1]1637*	0.0127	0.0013	0.3047	0.0070	0.0122	0.0055
NBP[1]1732*	0.0101	0.0011	0.2548	0.0058	0.0101	0.0046
NBP[1]1819*	0.0000	0.0000	0.0000	0.0000	0.0000	0.0000
NBP[1]1913*	0.0000	0.0000	0.0000	0.0000	0.0000	0.0000
Total	9.4567	1.0000	43.6633	1.0000	2.2058	1.0000

Vapour Phase

Phase Fraction 0.0000

COMPONENTS	MOLAR FLOW (kgmole/h)	MOLE FRACTION	MASS FLOW (tonne/d)	MASS FRACTION	LIQUID VOLUME FLOW (m3/h)	LIQUID VOLUME FRACTION
Methane	0.0000	0.4698	0.0000	0.2322	0.0000	0.3463
Ethane	0.0000	0.1629	0.0000	0.1509	0.0000	0.1895
Propane	0.0000	0.1546	0.0000	0.2100	0.0000	0.1851
i-Butane	0.0000	0.0276	0.0000	0.0495	0.0000	0.0393
n-Butane	0.0000	0.0579	0.0000	0.1037	0.0000	0.0794
i-Pentane	0.0000	0.0127	0.0000	0.0283	0.0000	0.0203
n-Pentane	0.0000	0.0139	0.0000	0.0310	0.0000	0.0220
n-Hexane	0.0000	0.0143	0.0000	0.0380	0.0000	0.0256
Nitrogen	0.0000	0.0069	0.0000	0.0059	0.0000	0.0033
CO2	0.0000	0.0412	0.0000	0.0559	0.0000	0.0302

* Specified by user.

Material Stream: 11 (continued)

Fluid Package: Basis-1
Property Package: Peng-Robinson

COMPOSITION

Vapour Phase (continued)

Phase Fraction 0.0000

COMPONENTS	MOLAR FLOW (kgmole/h)	MOLE FRACTION	MASS FLOW (tonne/d)	MASS FRACTION	LIQUID VOLUME FLOW (m3/h)	LIQUID VOLUME FRACTION
H2S	0.0000	0.0000	0.0000	0.0000	0.0000	0.0000
H2O	0.0000	0.0037	0.0000	0.0021	0.0000	0.0009
NBP[1]95*	0.0000	0.0043	0.0000	0.0089	0.0000	0.0059
NBP[1]121*	0.0000	0.0045	0.0000	0.0100	0.0000	0.0065
NBP[1]147*	0.0000	0.0047	0.0000	0.0117	0.0000	0.0074
NBP[1]171*	0.0000	0.0071	0.0000	0.0192	0.0000	0.0120
NBP[1]195*	0.0000	0.0069	0.0000	0.0200	0.0000	0.0124
NBP[1]222*	0.0000	0.0034	0.0000	0.0106	0.0000	0.0065
NBP[1]248*	0.0000	0.0018	0.0000	0.0061	0.0000	0.0037
NBP[1]273*	0.0000	0.0009	0.0000	0.0032	0.0000	0.0019
NBP[1]299*	0.0000	0.0004	0.0000	0.0016	0.0000	0.0009
NBP[1]325*	0.0000	0.0002	0.0000	0.0007	0.0000	0.0004
NBP[1]351*	0.0000	0.0001	0.0000	0.0003	0.0000	0.0002
NBP[1]377*	0.0000	0.0000	0.0000	0.0002	0.0000	0.0001
NBP[1]402*	0.0000	0.0000	0.0000	0.0001	0.0000	0.0000
NBP[1]428*	0.0000	0.0000	0.0000	0.0000	0.0000	0.0000
NBP[1]454*	0.0000	0.0000	0.0000	0.0000	0.0000	0.0000
NBP[1]480*	0.0000	0.0000	0.0000	0.0000	0.0000	0.0000
NBP[1]505*	0.0000	0.0000	0.0000	0.0000	0.0000	0.0000
NBP[1]531*	0.0000	0.0000	0.0000	0.0000	0.0000	0.0000
NBP[1]557*	0.0000	0.0000	0.0000	0.0000	0.0000	0.0000
NBP[1]582*	0.0000	0.0000	0.0000	0.0000	0.0000	0.0000
NBP[1]608*	0.0000	0.0000	0.0000	0.0000	0.0000	0.0000
NBP[1]634*	0.0000	0.0000	0.0000	0.0000	0.0000	0.0000
NBP[1]659*	0.0000	0.0000	0.0000	0.0000	0.0000	0.0000
NBP[1]685*	0.0000	0.0000	0.0000	0.0000	0.0000	0.0000
NBP[1]711*	0.0000	0.0000	0.0000	0.0000	0.0000	0.0000
NBP[1]736*	0.0000	0.0000	0.0000	0.0000	0.0000	0.0000
NBP[1]762*	0.0000	0.0000	0.0000	0.0000	0.0000	0.0000
NBP[1]788*	0.0000	0.0000	0.0000	0.0000	0.0000	0.0000
NBP[1]825*	0.0000	0.0000	0.0000	0.0000	0.0000	0.0000
NBP[1]873*	0.0000	0.0000	0.0000	0.0000	0.0000	0.0000
NBP[1]926*	0.0000	0.0000	0.0000	0.0000	0.0000	0.0000
NBP[1]978*	0.0000	0.0000	0.0000	0.0000	0.0000	0.0000
NBP[1]1021*	0.0000	0.0000	0.0000	0.0000	0.0000	0.0000
NBP[1]1075*	0.0000	0.0000	0.0000	0.0000	0.0000	0.0000
NBP[1]1123*	0.0000	0.0000	0.0000	0.0000	0.0000	0.0000
NBP[1]1173*	0.0000	0.0000	0.0000	0.0000	0.0000	0.0000
NBP[1]1250*	0.0000	0.0000	0.0000	0.0000	0.0000	0.0000
NBP[1]1339*	0.0000	0.0000	0.0000	0.0000	0.0000	0.0000
NBP[1]1432*	0.0000	0.0000	0.0000	0.0000	0.0000	0.0000
NBP[1]1528*	0.0000	0.0000	0.0000	0.0000	0.0000	0.0000
NBP[1]1637*	0.0000	0.0000	0.0000	0.0000	0.0000	0.0000
NBP[1]1732*	0.0000	0.0000	0.0000	0.0000	0.0000	0.0000
NBP[1]1819*	0.0000	0.0000	0.0000	0.0000	0.0000	0.0000
NBP[1]1913*	0.0000	0.0000	0.0000	0.0000	0.0000	0.0000
Total	0.0000	1.0000	0.0000	1.0000	0.0000	1.0000

Liquid Phase

Phase Fraction 1.653e-002

COMPONENTS	MOLAR FLOW (kgmole/h)	MOLE FRACTION	MASS FLOW (tonne/d)	MASS FRACTION	LIQUID VOLUME FLOW (m3/h)	LIQUID VOLUME FRACTION
Methane	0.0009	0.0059	0.0004	0.0001	0.0000	0.0005
Ethane	0.0010	0.0062	0.0007	0.0003	0.0001	0.0008
Propane	0.0023	0.0146	0.0024	0.0009	0.0002	0.0018

* Specified by user.

Material Stream: 11 (continued)

Fluid Package: Basis-1
Property Package: Peng-Robinson

COMPOSITION

Liquid Phase (continued)

Phase Fraction 1.653e-002

COMPONENTS	MOLAR FLOW (kgmole/h)	MOLE FRACTION	MASS FLOW (tonne/d)	MASS FRACTION	LIQUID VOLUME FLOW (m3/h)	LIQUID VOLUME FRACTION
i-Butane	0.0009	0.0055	0.0012	0.0005	0.0001	0.0008
n-Butane	0.0022	0.0140	0.0030	0.0012	0.0002	0.0020
i-Pentane	0.0010	0.0065	0.0018	0.0007	0.0001	0.0011
n-Pentane	0.0013	0.0085	0.0023	0.0009	0.0002	0.0014
n-Hexane	0.0035	0.0223	0.0072	0.0028	0.0005	0.0042
Nitrogen	0.0000	0.0001	0.0000	0.0000	0.0000	0.0000
CO2	0.0002	0.0014	0.0002	0.0001	0.0000	0.0001
H2S	0.0000	0.0000	0.0000	0.0000	0.0000	0.0000
H2O	0.0000	0.0001	0.0000	0.0000	0.0000	0.0000
NBP[1]95*	0.0004	0.0025	0.0006	0.0002	0.0000	0.0004
NBP[1]121*	0.0006	0.0037	0.0010	0.0004	0.0001	0.0006
NBP[1]147*	0.0009	0.0058	0.0017	0.0007	0.0001	0.0010
NBP[1]171*	0.0020	0.0125	0.0041	0.0016	0.0002	0.0022
NBP[1]195*	0.0028	0.0182	0.0064	0.0024	0.0004	0.0034
NBP[1]222*	0.0023	0.0147	0.0055	0.0021	0.0003	0.0029
NBP[1]248*	0.0020	0.0127	0.0052	0.0020	0.0003	0.0027
NBP[1]273*	0.0016	0.0104	0.0045	0.0017	0.0003	0.0023
NBP[1]299*	0.0013	0.0081	0.0037	0.0014	0.0002	0.0019
NBP[1]325*	0.0009	0.0057	0.0028	0.0011	0.0002	0.0014
NBP[1]351*	0.0007	0.0045	0.0023	0.0009	0.0001	0.0012
NBP[1]377*	0.0006	0.0039	0.0022	0.0008	0.0001	0.0011
NBP[1]402*	0.0005	0.0034	0.0020	0.0008	0.0001	0.0010
NBP[1]428*	0.0005	0.0031	0.0019	0.0007	0.0001	0.0009
NBP[1]454*	0.0004	0.0029	0.0019	0.0007	0.0001	0.0009
NBP[1]480*	0.0004	0.0027	0.0020	0.0008	0.0001	0.0009
NBP[1]505*	0.0004	0.0025	0.0019	0.0007	0.0001	0.0009
NBP[1]531*	0.0004	0.0023	0.0019	0.0007	0.0001	0.0009
NBP[1]557*	0.0003	0.0021	0.0018	0.0007	0.0001	0.0008
NBP[1]582*	0.0003	0.0019	0.0018	0.0007	0.0001	0.0008
NBP[1]608*	0.0003	0.0017	0.0017	0.0007	0.0001	0.0008
NBP[1]634*	0.0003	0.0016	0.0017	0.0007	0.0001	0.0008
NBP[1]659*	0.0002	0.0016	0.0017	0.0007	0.0001	0.0008
NBP[1]685*	0.0002	0.0016	0.0018	0.0007	0.0001	0.0008
NBP[1]711*	0.0002	0.0016	0.0019	0.0007	0.0001	0.0009
NBP[1]736*	0.0002	0.0016	0.0020	0.0008	0.0001	0.0009
NBP[1]762*	0.0002	0.0015	0.0021	0.0008	0.0001	0.0009
NBP[1]788*	0.0002	0.0015	0.0021	0.0008	0.0001	0.0009
NBP[1]825*	0.0004	0.0027	0.0041	0.0016	0.0002	0.0018
NBP[1]873*	0.0003	0.0022	0.0036	0.0014	0.0002	0.0015
NBP[1]926*	0.0004	0.0023	0.0041	0.0016	0.0002	0.0017
NBP[1]978*	0.0005	0.0031	0.0061	0.0024	0.0003	0.0025
NBP[1]1021*	0.0004	0.0024	0.0050	0.0019	0.0002	0.0020
NBP[1]1075*	0.0005	0.0032	0.0069	0.0027	0.0003	0.0028
NBP[1]1123*	0.0010	0.0061	0.0144	0.0055	0.0006	0.0057
NBP[1]1173*	0.0020	0.0126	0.0313	0.0120	0.0013	0.0124
NBP[1]1250*	0.0157	0.1007	0.2710	0.1042	0.0115	0.1061
NBP[1]1339*	0.0342	0.2189	0.6581	0.2529	0.0274	0.2531
NBP[1]1432*	0.0257	0.1642	0.5395	0.2074	0.0221	0.2044
NBP[1]1528*	0.0180	0.1153	0.4082	0.1569	0.0165	0.1526
NBP[1]1637*	0.0127	0.0810	0.3047	0.1171	0.0122	0.1125
NBP[1]1732*	0.0101	0.0644	0.2548	0.0980	0.0101	0.0931
NBP[1]1819*	0.0000	0.0000	0.0000	0.0000	0.0000	0.0000
NBP[1]1913*	0.0000	0.0000	0.0000	0.0000	0.0000	0.0000
Total	0.1563	1.0000	2.6017	1.0000	0.1082	1.0000

* Specified by user.

Material Stream: 11 (continued)

Fluid Package: Basis-1
Property Package: Peng-Robinson

COMPOSITION

Liquid Phase

Phase Fraction 0.9835

COMPONENTS	MOLAR FLOW (kgmole/h)	MOLE FRACTION	MASS FLOW (tonne/d)	MASS FRACTION	LIQUID VOLUME FLOW (m3/h)	LIQUID VOLUME FRACTION
Methane	0.0451	0.0049	0.0174	0.0004	0.0024	0.0012
Ethane	0.0723	0.0078	0.0522	0.0013	0.0061	0.0029
Propane	0.2206	0.0237	0.2335	0.0057	0.0192	0.0092
i-Butane	0.0947	0.0102	0.1320	0.0032	0.0098	0.0047
n-Butane	0.2677	0.0288	0.3734	0.0091	0.0267	0.0127
i-Pentane	0.1414	0.0152	0.2449	0.0060	0.0164	0.0078
n-Pentane	0.1994	0.0214	0.3453	0.0084	0.0228	0.0109
n-Hexane	0.6163	0.0663	1.2746	0.0310	0.0801	0.0382
Nitrogen	0.0003	0.0000	0.0002	0.0000	0.0000	0.0000
CO2	0.0109	0.0012	0.0115	0.0003	0.0006	0.0003
H2S	0.0000	0.0000	0.0000	0.0000	0.0000	0.0000
H2O	0.0010	0.0001	0.0004	0.0000	0.0000	0.0000
NBP[1]95*	0.0591	0.0064	0.0964	0.0023	0.0059	0.0028
NBP[1]121*	0.0968	0.0104	0.1693	0.0041	0.0102	0.0049
NBP[1]147*	0.1645	0.0177	0.3166	0.0077	0.0188	0.0090
NBP[1]171*	0.3906	0.0420	0.8220	0.0200	0.0481	0.0229
NBP[1]195*	0.6094	0.0655	1.3686	0.0333	0.0792	0.0378
NBP[1]222*	0.5326	0.0573	1.2865	0.0313	0.0735	0.0351
NBP[1]248*	0.4968	0.0534	1.2901	0.0314	0.0728	0.0347
NBP[1]273*	0.4352	0.0468	1.2087	0.0294	0.0675	0.0322
NBP[1]299*	0.3617	0.0389	1.0710	0.0261	0.0591	0.0282
NBP[1]325*	0.2741	0.0295	0.8621	0.0210	0.0471	0.0225
NBP[1]351*	0.2296	0.0247	0.7677	0.0187	0.0416	0.0198
NBP[1]377*	0.2149	0.0231	0.7663	0.0187	0.0411	0.0196
NBP[1]402*	0.2001	0.0215	0.7609	0.0185	0.0404	0.0192
NBP[1]428*	0.1923	0.0207	0.7801	0.0190	0.0410	0.0195
NBP[1]454*	0.1930	0.0208	0.8370	0.0204	0.0435	0.0207
NBP[1]480*	0.1964	0.0211	0.9102	0.0222	0.0469	0.0223
NBP[1]505*	0.1908	0.0205	0.9427	0.0230	0.0481	0.0229
NBP[1]531*	0.1844	0.0198	0.9699	0.0236	0.0490	0.0234
NBP[1]557*	0.1778	0.0191	0.9947	0.0242	0.0498	0.0238
NBP[1]582*	0.1702	0.0183	1.0106	0.0246	0.0502	0.0239
NBP[1]608*	0.1639	0.0176	1.0329	0.0252	0.0509	0.0243
NBP[1]634*	0.1608	0.0173	1.0734	0.0261	0.0525	0.0250
NBP[1]659*	0.1584	0.0170	1.1176	0.0272	0.0542	0.0258
NBP[1]685*	0.1639	0.0176	1.2208	0.0297	0.0587	0.0280
NBP[1]711*	0.1713	0.0184	1.3425	0.0327	0.0641	0.0305
NBP[1]736*	0.1695	0.0182	1.3895	0.0338	0.0658	0.0314
NBP[1]762*	0.1651	0.0177	1.4194	0.0346	0.0668	0.0318
NBP[1]788*	0.1582	0.0170	1.4402	0.0351	0.0673	0.0321
NBP[1]825*	0.2650	0.0285	2.5922	0.0631	0.1199	0.0572
NBP[1]873*	0.1826	0.0196	1.9368	0.0472	0.0886	0.0422
NBP[1]926*	0.1434	0.0154	1.6431	0.0400	0.0743	0.0354
NBP[1]978*	0.1469	0.0158	1.8463	0.0450	0.0822	0.0392
NBP[1]1021*	0.0724	0.0078	0.9605	0.0234	0.0424	0.0202
NBP[1]1075*	0.0444	0.0048	0.6241	0.0152	0.0273	0.0130
NBP[1]1123*	0.0408	0.0044	0.6124	0.0149	0.0265	0.0126
NBP[1]1173*	0.0280	0.0030	0.4458	0.0109	0.0191	0.0091
NBP[1]1250*	0.0236	0.0025	0.4056	0.0099	0.0172	0.0082
NBP[1]1339*	0.0022	0.0002	0.0418	0.0010	0.0017	0.0008
NBP[1]1432*	0.0000	0.0000	0.0002	0.0000	0.0000	0.0000
NBP[1]1528*	0.0000	0.0000	0.0000	0.0000	0.0000	0.0000
NBP[1]1637*	0.0000	0.0000	0.0000	0.0000	0.0000	0.0000
NBP[1]1732*	0.0000	0.0000	0.0000	0.0000	0.0000	0.0000

* Specified by user.

Material Stream: 11 (continued)

Fluid Package: Basis-1
Property Package: Peng-Robinson

COMPOSITION

Liquid Phase (continued)

Phase Fraction 0.9835

COMPONENTS	MOLAR FLOW (kgmole/h)	MOLE FRACTION	MASS FLOW (tonne/d)	MASS FRACTION	LIQUID VOLUME FLOW (m3/h)	LIQUID VOLUME FRACTION
NBP[1]1819*	0.0000	0.0000	0.0000	0.0000	0.0000	0.0000
NBP[1]1913*	0.0000	0.0000	0.0000	0.0000	0.0000	0.0000
Total	9.3004	1.0000	41.0617	1.0000	2.0976	1.0000

Material Stream: 12

Fluid Package: Basis-1
Property Package: Peng-Robinson

CONDITIONS

		Overall	Vapour Phase	Liquid Phase	Liquid Phase
Vapour / Phase Fraction		1.0000	1.0000	0.0000	0.0000
Temperature:	(F)	109.7	109.7	109.7	109.7
Pressure:	(psig)	20.00	20.00	20.00	20.00
Molar Flow	(MMSCFD)	0.1896	0.1896	0.0000	0.0000
Mass Flow	(tonne/d)	7.359	7.359	0.0000	0.0000
Std Ideal Liq Vol Flow	(barrel/day)	103.6	103.6	0.0000	0.0000
Molar Enthalpy	(kJ/kgmole)	-1.042e+005	-1.042e+005	-1.463e+006	-3.938e+005
Molar Entropy	(kJ/kgmole-C)	185.0	185.0	1532	298.4
Heat Flow	(MMBtu/hr)	-0.9326	-0.9326	0.0000	0.0000
Liq Vol Flow @Std Cond	(barrel/day)	2.281e+004 *	2.281e+004	0.0000	0.0000

PROPERTIES

		Overall	Vapour Phase	Liquid Phase	Liquid Phase
Molecular Weight		32.46	32.46	693.6	184.0
Molar Density	(kgmole/m3)	9.251e-002	9.251e-002	1.400	4.348
Mass Density	(kg/m3)	3.003	3.003	970.9	799.8
Act. Volume Flow	(barrel/day)	1.541e+004	1.541e+004	0.0000	0.0000
Mass Enthalpy	(kJ/kg)	-3209	-3209	-2109	-2141
Mass Entropy	(kJ/kg-C)	5.700	5.700	2.208	1.622
Heat Capacity	(kJ/kgmole-C)	60.02	60.02	1347	370.3
Mass Heat Capacity	(kJ/kg-C)	1.849	1.849	1.942	2.013
LHV Molar Basis (Std)	(Btu/SCF)	---	---	---	---
LHV Mass Basis (Std)	(kJ/kg)	---	---	---	---
Phase Fraction [Vol. Basis]		1.000	1.000	---	---
Phase Fraction [Mass Basis]		1.000	1.000	0.0000	0.0000
Partial Pressure of CO2	(psig)	-13.27	---	---	---
Cost Based on Flow	(Cost/s)	0.0000	0.0000	0.0000	0.0000
Act. Gas Flow	(ACT_m3/h)	102.1	102.1	---	---
Avg. Liq. Density	(kgmole/m3)	13.76	13.76	1.444	4.434
Specific Heat	(kJ/kgmole-C)	60.02	60.02	1347	370.3
Std. Gas Flow	(STD_m3/h)	223.3	223.3	0.0000	0.0000
Std. Ideal Liq. Mass Density	(kg/m3)	446.6	446.6	1001	815.7
Act. Liq. Flow	(barrel/day)	0.0000	---	---	0.0000
Z Factor		---	0.9832	6.498e-002	2.092e-002
Watson K		15.40	15.40	11.94	11.86
User Property		---	---	---	---
Partial Pressure of H2S	(psig)	-14.70	---	---	---
Cp/(Cp - R)		1.161	1.161	1.006	1.023
Cp/Cv		1.173	1.173	1.131	1.170
Heat of Vap.	(kJ/kgmole)	2.480e+004	---	---	---
Kinematic Viscosity	(cSt)	3.617	3.617	2268	2.065
Liq. Mass Density (Std. Cond)	(kg/m3)	2.029	2.029	988.3	821.8
Liq. Vol. Flow (Std. Cond)	(barrel/day)	2.281e+004	2.281e+004	0.0000	0.0000
Liquid Fraction		0.0000	0.0000	1.000	1.000
Molar Volume	(m3/kgmole)	10.81	10.81	0.7144	0.2300

* Specified by user.

Material Stream: 12 (continued)

Fluid Package: Basis-1
Property Package: Peng-Robinson

PROPERTIES

	Overall	Vapour Phase	Liquid Phase	Liquid Phase
Mass Heat of Vap. (kJ/kg)	764.0	---	---	---
Phase Fraction [Molar Basis]	1.0000	1.0000	0.0000	0.0000
Surface Tension (dyne/cm)	---	---	25.44	21.65
Thermal Conductivity (W/m-K)	2.602e-002	2.602e-002	0.1347	0.1124
Viscosity (cP)	1.086e-002	1.086e-002	2202	1.652
Cv (Semi-Ideal) (kJ/kgmole-C)	51.70	51.70	1339	---
Mass Cv (Semi-Ideal) (kJ/kg-C)	1.593	1.593	1.930	---
Cv (kJ/kgmole-C)	51.15	51.15	1191	---
Mass Cv (kJ/kg-C)	1.576	1.576	1.717	---
Cv (Ent. Method) (kJ/kgmole-C)	---	---	1266	---
Mass Cv (Ent. Method) (kJ/kg-C)	---	---	1.826	---
Cp/Cv (Ent. Method)	---	---	1.064	---
Reid VP at 37.8 C (psig)	968.2	968.2	-8.570	-2.999
True VP at 37.8 C (psig)	1620	1620	18.21	17.76
Liq. Vol. Flow - Sum(Std. Cond) (barrel/day)	2.281e+004	2.281e+004	0.0000	0.0000
HHV Molar Basis (Std) (Btu/SCF)	---	---	---	---
HHV Mass Basis (Std) (kJ/kg)	---	---	---	---
CO2 Loading	---	---	---	---
CO2 App ML Con (kgmole/m3)	---	---	---	---
CO2 App WT Con (kgmol/kg)	---	---	---	---
Phase Fraction [Act. Vol. Basis]	1.000	1.000	0.0000	0.0000
Mass Exergy (kJ/kg)	65.69	---	---	---
Viscosity Index	-5.515	---	---	---
Ideal Gas Cp/Cv	1.163	1.163	1.007	1.029
Ideal Gas Cp (kJ/kgmole-C)	59.39	59.39	1129	299.0
Mass Ideal Gas Cp (kJ/kg-C)	1.830	1.830	1.628	1.625
Bubble Point Pressure (psig)	1647	---	---	---

COMPOSITION

Overall Phase

Vapour Fraction 1.0000

COMPONENTS	MOLAR FLOW (kgmole/h)	MOLE FRACTION	MASS FLOW (tonne/d)	MASS FRACTION	LIQUID VOLUME FLOW (m3/h)	LIQUID VOLUME FRACTION
Methane	4.4374	0.4698	1.7085	0.2322	0.2378	0.3463
Ethane	1.5387	0.1629	1.1105	0.1509	0.1301	0.1895
Propane	1.4603	0.1546	1.5454	0.2100	0.1271	0.1851
i-Butane	0.2610	0.0276	0.3640	0.0495	0.0270	0.0393
n-Butane	0.5472	0.0579	0.7633	0.1037	0.0545	0.0794
i-Pentane	0.1204	0.0127	0.2084	0.0283	0.0139	0.0203
n-Pentane	0.1317	0.0139	0.2281	0.0310	0.0151	0.0220
n-Hexane	0.1352	0.0143	0.2796	0.0380	0.0176	0.0256
Nitrogen	0.0650	0.0069	0.0437	0.0059	0.0023	0.0033
CO2	0.3893	0.0412	0.4112	0.0559	0.0208	0.0302
H2S	0.0000	0.0000	0.0000	0.0000	0.0000	0.0000
H2O	0.0349	0.0037	0.0151	0.0021	0.0006	0.0009
NBP[1]95*	0.0403	0.0043	0.0657	0.0089	0.0040	0.0059
NBP[1]121*	0.0421	0.0045	0.0736	0.0100	0.0045	0.0065
NBP[1]147*	0.0446	0.0047	0.0858	0.0117	0.0051	0.0074
NBP[1]171*	0.0671	0.0071	0.1411	0.0192	0.0083	0.0120
NBP[1]195*	0.0655	0.0069	0.1470	0.0200	0.0085	0.0124
NBP[1]222*	0.0323	0.0034	0.0779	0.0106	0.0045	0.0065
NBP[1]248*	0.0172	0.0018	0.0447	0.0061	0.0025	0.0037
NBP[1]273*	0.0085	0.0009	0.0236	0.0032	0.0013	0.0019
NBP[1]299*	0.0039	0.0004	0.0116	0.0016	0.0006	0.0009
NBP[1]325*	0.0016	0.0002	0.0050	0.0007	0.0003	0.0004
NBP[1]351*	0.0007	0.0001	0.0023	0.0003	0.0001	0.0002
NBP[1]377*	0.0003	0.0000	0.0012	0.0002	0.0001	0.0001

Licensed to: PETROCHEMICAL ENGINEERIN
* Specified by user.

Material Stream: 12 (continued)

Fluid Package: Basis-1
Property Package: Peng-Robinson

COMPOSITION

Overall Phase (continued)

Vapour Fraction 1.0000

COMPONENTS	MOLAR FLOW (kgmole/h)	MOLE FRACTION	MASS FLOW (tonne/d)	MASS FRACTION	LIQUID VOLUME FLOW (m3/h)	LIQUID VOLUME FRACTION
NBP[1]402*	0.0001	0.0000	0.0006	0.0001	0.0000	0.0000
NBP[1]428*	0.0001	0.0000	0.0003	0.0000	0.0000	0.0000
NBP[1]454*	0.0000	0.0000	0.0001	0.0000	0.0000	0.0000
NBP[1]480*	0.0000	0.0000	0.0001	0.0000	0.0000	0.0000
NBP[1]505*	0.0000	0.0000	0.0000	0.0000	0.0000	0.0000
NBP[1]531*	0.0000	0.0000	0.0000	0.0000	0.0000	0.0000
NBP[1]557*	0.0000	0.0000	0.0000	0.0000	0.0000	0.0000
NBP[1]582*	0.0000	0.0000	0.0000	0.0000	0.0000	0.0000
NBP[1]608*	0.0000	0.0000	0.0000	0.0000	0.0000	0.0000
NBP[1]634*	0.0000	0.0000	0.0000	0.0000	0.0000	0.0000
NBP[1]659*	0.0000	0.0000	0.0000	0.0000	0.0000	0.0000
NBP[1]685*	0.0000	0.0000	0.0000	0.0000	0.0000	0.0000
NBP[1]711*	0.0000	0.0000	0.0000	0.0000	0.0000	0.0000
NBP[1]736*	0.0000	0.0000	0.0000	0.0000	0.0000	0.0000
NBP[1]762*	0.0000	0.0000	0.0000	0.0000	0.0000	0.0000
NBP[1]788*	0.0000	0.0000	0.0000	0.0000	0.0000	0.0000
NBP[1]825*	0.0000	0.0000	0.0000	0.0000	0.0000	0.0000
NBP[1]873*	0.0000	0.0000	0.0000	0.0000	0.0000	0.0000
NBP[1]926*	0.0000	0.0000	0.0000	0.0000	0.0000	0.0000
NBP[1]978*	0.0000	0.0000	0.0000	0.0000	0.0000	0.0000
NBP[1]1021*	0.0000	0.0000	0.0000	0.0000	0.0000	0.0000
NBP[1]1075*	0.0000	0.0000	0.0000	0.0000	0.0000	0.0000
NBP[1]1123*	0.0000	0.0000	0.0000	0.0000	0.0000	0.0000
NBP[1]1173*	0.0000	0.0000	0.0000	0.0000	0.0000	0.0000
NBP[1]1250*	0.0000	0.0000	0.0000	0.0000	0.0000	0.0000
NBP[1]1339*	0.0000	0.0000	0.0000	0.0000	0.0000	0.0000
NBP[1]1432*	0.0000	0.0000	0.0000	0.0000	0.0000	0.0000
NBP[1]1528*	0.0000	0.0000	0.0000	0.0000	0.0000	0.0000
NBP[1]1637*	0.0000	0.0000	0.0000	0.0000	0.0000	0.0000
NBP[1]1732*	0.0000	0.0000	0.0000	0.0000	0.0000	0.0000
NBP[1]1819*	0.0000	0.0000	0.0000	0.0000	0.0000	0.0000
NBP[1]1913*	0.0000	0.0000	0.0000	0.0000	0.0000	0.0000
Total	9.4453	1.0000	7.3585	1.0000	0.6865	1.0000

Vapour Phase

Phase Fraction 1.000

COMPONENTS	MOLAR FLOW (kgmole/h)	MOLE FRACTION	MASS FLOW (tonne/d)	MASS FRACTION	LIQUID VOLUME FLOW (m3/h)	LIQUID VOLUME FRACTION
Methane	4.4374	0.4698	1.7085	0.2322	0.2378	0.3463
Ethane	1.5387	0.1629	1.1105	0.1509	0.1301	0.1895
Propane	1.4603	0.1546	1.5454	0.2100	0.1271	0.1851
i-Butane	0.2610	0.0276	0.3640	0.0495	0.0270	0.0393
n-Butane	0.5472	0.0579	0.7633	0.1037	0.0545	0.0794
i-Pentane	0.1204	0.0127	0.2084	0.0283	0.0139	0.0203
n-Pentane	0.1317	0.0139	0.2281	0.0310	0.0151	0.0220
n-Hexane	0.1352	0.0143	0.2796	0.0380	0.0176	0.0256
Nitrogen	0.0650	0.0069	0.0437	0.0059	0.0023	0.0033
CO2	0.3893	0.0412	0.4112	0.0559	0.0208	0.0302
H2S	0.0000	0.0000	0.0000	0.0000	0.0000	0.0000
H2O	0.0349	0.0037	0.0151	0.0021	0.0006	0.0009
NBP[1]95*	0.0403	0.0043	0.0657	0.0089	0.0040	0.0059
NBP[1]121*	0.0421	0.0045	0.0736	0.0100	0.0045	0.0065
NBP[1]147*	0.0446	0.0047	0.0858	0.0117	0.0051	0.0074
NBP[1]171*	0.0671	0.0071	0.1411	0.0192	0.0083	0.0120
NBP[1]195*	0.0655	0.0069	0.1470	0.0200	0.0085	0.0124

* Specified by user.

Material Stream: 12 (continued)

Fluid Package: Basis-1
Property Package: Peng-Robinson

COMPOSITION

Vapour Phase (continued)

Phase Fraction 1.000

COMPONENTS	MOLAR FLOW (kgmole/h)	MOLE FRACTION	MASS FLOW (tonne/d)	MASS FRACTION	LIQUID VOLUME FLOW (m3/h)	LIQUID VOLUME FRACTION
NBP[1]222*	0.0323	0.0034	0.0779	0.0106	0.0045	0.0065
NBP[1]248*	0.0172	0.0018	0.0447	0.0061	0.0025	0.0037
NBP[1]273*	0.0085	0.0009	0.0236	0.0032	0.0013	0.0019
NBP[1]299*	0.0039	0.0004	0.0116	0.0016	0.0006	0.0009
NBP[1]325*	0.0016	0.0002	0.0050	0.0007	0.0003	0.0004
NBP[1]351*	0.0007	0.0001	0.0023	0.0003	0.0001	0.0002
NBP[1]377*	0.0003	0.0000	0.0012	0.0002	0.0001	0.0001
NBP[1]402*	0.0001	0.0000	0.0006	0.0001	0.0000	0.0000
NBP[1]428*	0.0001	0.0000	0.0003	0.0000	0.0000	0.0000
NBP[1]454*	0.0000	0.0000	0.0001	0.0000	0.0000	0.0000
NBP[1]480*	0.0000	0.0000	0.0001	0.0000	0.0000	0.0000
NBP[1]505*	0.0000	0.0000	0.0000	0.0000	0.0000	0.0000
NBP[1]531*	0.0000	0.0000	0.0000	0.0000	0.0000	0.0000
NBP[1]557*	0.0000	0.0000	0.0000	0.0000	0.0000	0.0000
NBP[1]582*	0.0000	0.0000	0.0000	0.0000	0.0000	0.0000
NBP[1]608*	0.0000	0.0000	0.0000	0.0000	0.0000	0.0000
NBP[1]634*	0.0000	0.0000	0.0000	0.0000	0.0000	0.0000
NBP[1]659*	0.0000	0.0000	0.0000	0.0000	0.0000	0.0000
NBP[1]685*	0.0000	0.0000	0.0000	0.0000	0.0000	0.0000
NBP[1]711*	0.0000	0.0000	0.0000	0.0000	0.0000	0.0000
NBP[1]736*	0.0000	0.0000	0.0000	0.0000	0.0000	0.0000
NBP[1]762*	0.0000	0.0000	0.0000	0.0000	0.0000	0.0000
NBP[1]788*	0.0000	0.0000	0.0000	0.0000	0.0000	0.0000
NBP[1]825*	0.0000	0.0000	0.0000	0.0000	0.0000	0.0000
NBP[1]873*	0.0000	0.0000	0.0000	0.0000	0.0000	0.0000
NBP[1]926*	0.0000	0.0000	0.0000	0.0000	0.0000	0.0000
NBP[1]978*	0.0000	0.0000	0.0000	0.0000	0.0000	0.0000
NBP[1]1021*	0.0000	0.0000	0.0000	0.0000	0.0000	0.0000
NBP[1]1075*	0.0000	0.0000	0.0000	0.0000	0.0000	0.0000
NBP[1]1123*	0.0000	0.0000	0.0000	0.0000	0.0000	0.0000
NBP[1]1173*	0.0000	0.0000	0.0000	0.0000	0.0000	0.0000
NBP[1]1250*	0.0000	0.0000	0.0000	0.0000	0.0000	0.0000
NBP[1]1339*	0.0000	0.0000	0.0000	0.0000	0.0000	0.0000
NBP[1]1432*	0.0000	0.0000	0.0000	0.0000	0.0000	0.0000
NBP[1]1528*	0.0000	0.0000	0.0000	0.0000	0.0000	0.0000
NBP[1]1637*	0.0000	0.0000	0.0000	0.0000	0.0000	0.0000
NBP[1]1732*	0.0000	0.0000	0.0000	0.0000	0.0000	0.0000
NBP[1]1819*	0.0000	0.0000	0.0000	0.0000	0.0000	0.0000
NBP[1]1913*	0.0000	0.0000	0.0000	0.0000	0.0000	0.0000
Total	9.4453	1.0000	7.3585	1.0000	0.6865	1.0000

Liquid Phase

Phase Fraction 0.0000

COMPONENTS	MOLAR FLOW (kgmole/h)	MOLE FRACTION	MASS FLOW (tonne/d)	MASS FRACTION	LIQUID VOLUME FLOW (m3/h)	LIQUID VOLUME FRACTION
Methane	0.0000	0.0059	0.0000	0.0001	0.0000	0.0005
Ethane	0.0000	0.0062	0.0000	0.0003	0.0000	0.0008
Propane	0.0000	0.0146	0.0000	0.0009	0.0000	0.0018
i-Butane	0.0000	0.0055	0.0000	0.0005	0.0000	0.0008
n-Butane	0.0000	0.0140	0.0000	0.0012	0.0000	0.0020
i-Pentane	0.0000	0.0065	0.0000	0.0007	0.0000	0.0011
n-Pentane	0.0000	0.0085	0.0000	0.0009	0.0000	0.0014
n-Hexane	0.0000	0.0223	0.0000	0.0028	0.0000	0.0042
Nitrogen	0.0000	0.0001	0.0000	0.0000	0.0000	0.0000
CO2	0.0000	0.0014	0.0000	0.0001	0.0000	0.0001

* Specified by user.

Material Stream: 12 (continued)

Fluid Package: Basis-1
Property Package: Peng-Robinson

COMPOSITION

Liquid Phase (continued)

Phase Fraction 0.0000

COMPONENTS	MOLAR FLOW (kgmole/h)	MOLE FRACTION	MASS FLOW (tonne/d)	MASS FRACTION	LIQUID VOLUME FLOW (m3/h)	LIQUID VOLUME FRACTION
H2S	0.0000	0.0000	0.0000	0.0000	0.0000	0.0000
H2O	0.0000	0.0001	0.0000	0.0000	0.0000	0.0000
NBP[1]95*	0.0000	0.0025	0.0000	0.0002	0.0000	0.0004
NBP[1]121*	0.0000	0.0037	0.0000	0.0004	0.0000	0.0006
NBP[1]147*	0.0000	0.0058	0.0000	0.0007	0.0000	0.0010
NBP[1]171*	0.0000	0.0125	0.0000	0.0016	0.0000	0.0022
NBP[1]195*	0.0000	0.0182	0.0000	0.0024	0.0000	0.0034
NBP[1]222*	0.0000	0.0147	0.0000	0.0021	0.0000	0.0029
NBP[1]248*	0.0000	0.0127	0.0000	0.0020	0.0000	0.0027
NBP[1]273*	0.0000	0.0104	0.0000	0.0017	0.0000	0.0023
NBP[1]299*	0.0000	0.0081	0.0000	0.0014	0.0000	0.0019
NBP[1]325*	0.0000	0.0057	0.0000	0.0011	0.0000	0.0014
NBP[1]351*	0.0000	0.0045	0.0000	0.0009	0.0000	0.0012
NBP[1]377*	0.0000	0.0039	0.0000	0.0008	0.0000	0.0011
NBP[1]402*	0.0000	0.0034	0.0000	0.0008	0.0000	0.0010
NBP[1]428*	0.0000	0.0031	0.0000	0.0007	0.0000	0.0009
NBP[1]454*	0.0000	0.0029	0.0000	0.0007	0.0000	0.0009
NBP[1]480*	0.0000	0.0027	0.0000	0.0008	0.0000	0.0009
NBP[1]505*	0.0000	0.0025	0.0000	0.0007	0.0000	0.0009
NBP[1]531*	0.0000	0.0023	0.0000	0.0007	0.0000	0.0009
NBP[1]557*	0.0000	0.0021	0.0000	0.0007	0.0000	0.0008
NBP[1]582*	0.0000	0.0019	0.0000	0.0007	0.0000	0.0008
NBP[1]608*	0.0000	0.0017	0.0000	0.0007	0.0000	0.0008
NBP[1]634*	0.0000	0.0016	0.0000	0.0007	0.0000	0.0008
NBP[1]659*	0.0000	0.0016	0.0000	0.0007	0.0000	0.0008
NBP[1]685*	0.0000	0.0016	0.0000	0.0007	0.0000	0.0008
NBP[1]711*	0.0000	0.0016	0.0000	0.0007	0.0000	0.0009
NBP[1]736*	0.0000	0.0016	0.0000	0.0008	0.0000	0.0009
NBP[1]762*	0.0000	0.0015	0.0000	0.0008	0.0000	0.0009
NBP[1]788*	0.0000	0.0015	0.0000	0.0008	0.0000	0.0009
NBP[1]825*	0.0000	0.0027	0.0000	0.0016	0.0000	0.0018
NBP[1]873*	0.0000	0.0022	0.0000	0.0014	0.0000	0.0015
NBP[1]926*	0.0000	0.0023	0.0000	0.0016	0.0000	0.0017
NBP[1]978*	0.0000	0.0031	0.0000	0.0024	0.0000	0.0025
NBP[1]1021*	0.0000	0.0024	0.0000	0.0019	0.0000	0.0020
NBP[1]1075*	0.0000	0.0032	0.0000	0.0027	0.0000	0.0028
NBP[1]1123*	0.0000	0.0061	0.0000	0.0055	0.0000	0.0057
NBP[1]1173*	0.0000	0.0126	0.0000	0.0120	0.0000	0.0124
NBP[1]1250*	0.0000	0.1007	0.0000	0.1042	0.0000	0.1061
NBP[1]1339*	0.0000	0.2189	0.0000	0.2529	0.0000	0.2531
NBP[1]1432*	0.0000	0.1642	0.0000	0.2074	0.0000	0.2044
NBP[1]1528*	0.0000	0.1153	0.0000	0.1569	0.0000	0.1526
NBP[1]1637*	0.0000	0.0810	0.0000	0.1171	0.0000	0.1125
NBP[1]1732*	0.0000	0.0644	0.0000	0.0980	0.0000	0.0931
NBP[1]1819*	0.0000	0.0000	0.0000	0.0000	0.0000	0.0000
NBP[1]1913*	0.0000	0.0000	0.0000	0.0000	0.0000	0.0000
Total	0.0000	1.0000	0.0000	1.0000	0.0000	1.0000

Liquid Phase

Phase Fraction 0.0000

COMPONENTS	MOLAR FLOW (kgmole/h)	MOLE FRACTION	MASS FLOW (tonne/d)	MASS FRACTION	LIQUID VOLUME FLOW (m3/h)	LIQUID VOLUME FRACTION
Methane	0.0000	0.0049	0.0000	0.0004	0.0000	0.0012
Ethane	0.0000	0.0078	0.0000	0.0013	0.0000	0.0029
Propane	0.0000	0.0237	0.0000	0.0057	0.0000	0.0092

* Specified by user.

Material Stream: 12 (continued)

Fluid Package: Basis-1
Property Package: Peng-Robinson

COMPOSITION

Liquid Phase (continued)

Phase Fraction 0.0000

COMPONENTS	MOLAR FLOW (kgmole/h)	MOLE FRACTION	MASS FLOW (tonne/d)	MASS FRACTION	LIQUID VOLUME FLOW (m3/h)	LIQUID VOLUME FRACTION
i-Butane	0.0000	0.0102	0.0000	0.0032	0.0000	0.0047
n-Butane	0.0000	0.0288	0.0000	0.0091	0.0000	0.0127
i-Pentane	0.0000	0.0152	0.0000	0.0060	0.0000	0.0078
n-Pentane	0.0000	0.0214	0.0000	0.0084	0.0000	0.0109
n-Hexane	0.0000	0.0663	0.0000	0.0310	0.0000	0.0382
Nitrogen	0.0000	0.0000	0.0000	0.0000	0.0000	0.0000
CO2	0.0000	0.0012	0.0000	0.0003	0.0000	0.0003
H2S	0.0000	0.0000	0.0000	0.0000	0.0000	0.0000
H2O	0.0000	0.0001	0.0000	0.0000	0.0000	0.0000
NBP[1]95*	0.0000	0.0064	0.0000	0.0023	0.0000	0.0028
NBP[1]121*	0.0000	0.0104	0.0000	0.0041	0.0000	0.0049
NBP[1]147*	0.0000	0.0177	0.0000	0.0077	0.0000	0.0090
NBP[1]171*	0.0000	0.0420	0.0000	0.0200	0.0000	0.0229
NBP[1]195*	0.0000	0.0655	0.0000	0.0333	0.0000	0.0378
NBP[1]222*	0.0000	0.0573	0.0000	0.0313	0.0000	0.0351
NBP[1]248*	0.0000	0.0534	0.0000	0.0314	0.0000	0.0347
NBP[1]273*	0.0000	0.0468	0.0000	0.0294	0.0000	0.0322
NBP[1]299*	0.0000	0.0389	0.0000	0.0261	0.0000	0.0282
NBP[1]325*	0.0000	0.0295	0.0000	0.0210	0.0000	0.0225
NBP[1]351*	0.0000	0.0247	0.0000	0.0187	0.0000	0.0198
NBP[1]377*	0.0000	0.0231	0.0000	0.0187	0.0000	0.0196
NBP[1]402*	0.0000	0.0215	0.0000	0.0185	0.0000	0.0192
NBP[1]428*	0.0000	0.0207	0.0000	0.0190	0.0000	0.0195
NBP[1]454*	0.0000	0.0208	0.0000	0.0204	0.0000	0.0207
NBP[1]480*	0.0000	0.0211	0.0000	0.0222	0.0000	0.0223
NBP[1]505*	0.0000	0.0205	0.0000	0.0230	0.0000	0.0229
NBP[1]531*	0.0000	0.0198	0.0000	0.0236	0.0000	0.0234
NBP[1]557*	0.0000	0.0191	0.0000	0.0242	0.0000	0.0238
NBP[1]582*	0.0000	0.0183	0.0000	0.0246	0.0000	0.0239
NBP[1]608*	0.0000	0.0176	0.0000	0.0252	0.0000	0.0243
NBP[1]634*	0.0000	0.0173	0.0000	0.0261	0.0000	0.0250
NBP[1]659*	0.0000	0.0170	0.0000	0.0272	0.0000	0.0258
NBP[1]685*	0.0000	0.0176	0.0000	0.0297	0.0000	0.0280
NBP[1]711*	0.0000	0.0184	0.0000	0.0327	0.0000	0.0305
NBP[1]736*	0.0000	0.0182	0.0000	0.0338	0.0000	0.0314
NBP[1]762*	0.0000	0.0177	0.0000	0.0346	0.0000	0.0318
NBP[1]788*	0.0000	0.0170	0.0000	0.0351	0.0000	0.0321
NBP[1]825*	0.0000	0.0285	0.0000	0.0631	0.0000	0.0572
NBP[1]873*	0.0000	0.0196	0.0000	0.0472	0.0000	0.0422
NBP[1]926*	0.0000	0.0154	0.0000	0.0400	0.0000	0.0354
NBP[1]978*	0.0000	0.0158	0.0000	0.0450	0.0000	0.0392
NBP[1]1021*	0.0000	0.0078	0.0000	0.0234	0.0000	0.0202
NBP[1]1075*	0.0000	0.0048	0.0000	0.0152	0.0000	0.0130
NBP[1]1123*	0.0000	0.0044	0.0000	0.0149	0.0000	0.0126
NBP[1]1173*	0.0000	0.0030	0.0000	0.0109	0.0000	0.0091
NBP[1]1250*	0.0000	0.0025	0.0000	0.0099	0.0000	0.0082
NBP[1]1339*	0.0000	0.0002	0.0000	0.0010	0.0000	0.0008
NBP[1]1432*	0.0000	0.0000	0.0000	0.0000	0.0000	0.0000
NBP[1]1528*	0.0000	0.0000	0.0000	0.0000	0.0000	0.0000
NBP[1]1637*	0.0000	0.0000	0.0000	0.0000	0.0000	0.0000
NBP[1]1732*	0.0000	0.0000	0.0000	0.0000	0.0000	0.0000
NBP[1]1819*	0.0000	0.0000	0.0000	0.0000	0.0000	0.0000
NBP[1]1913*	0.0000	0.0000	0.0000	0.0000	0.0000	0.0000
Total	0.0000	1.0000	0.0000	1.0000	0.0000	1.0000

* Specified by user.

Petrochemical Engineering Consultants Karachi, Pakistan	Case Name:	CASE-2A.hsc	
	Unit Set:	NewUser5e	
	Date/Time:	Fri Mar 20 18:20:59 2020	

Material Stream: 13

Fluid Package: Basis-1

Property Package: Peng-Robinson

CONDITIONS

	Overall	Vapour Phase
Vapour / Phase Fraction	1.0000	1.0000
Temperature: (F)	100.9	100.9
Pressure: (psig)	20.00	20.00
Molar Flow (MMSCFD)	3.000	3.000
Mass Flow (tonne/d)	83.55	83.55
Std Ideal Liq Vol Flow (barrel/day)	1244	1244
Molar Enthalpy (kJ/kgmole)	-1.302e+005	-1.302e+005
Molar Entropy (kJ/kgmole-C)	182.2	182.2
Heat Flow (MMBtu/hr)	-18.43	-18.43
Liq Vol Flow @Std Cond (barrel/day)	5.315e+005 *	5.315e+005

PROPERTIES

	Overall	Vapour Phase
Molecular Weight	23.30	23.30
Molar Density (kgmole/m3)	9.296e-002	9.296e-002
Mass Density (kg/m3)	2.166	2.166
Act. Volume Flow (barrel/day)	2.426e+005	2.426e+005
Mass Enthalpy (kJ/kg)	-5587	-5587
Mass Entropy (kJ/kg-C)	7.818	7.818
Heat Capacity (kJ/kgmole-C)	39.12	39.12
Mass Heat Capacity (kJ/kg-C)	1.679	1.679
LHV Molar Basis (Std) (Btu/SCF)	---	---
LHV Mass Basis (Std) (kJ/kg)	---	---
Phase Fraction [Vol. Basis]	1.000	1.000
Phase Fraction [Mass Basis]	1.000	1.000
Partial Pressure of CO2 (psig)	-8.427	---
Cost Based on Flow (Cost/s)	0.0000	0.0000
Act. Gas Flow (ACT_m3/h)	1607	1607
Avg. Liq. Density (kgmole/m3)	18.13	18.13
Specific Heat (kJ/kgmole-C)	39.12	39.12
Std. Gas Flow (STD_m3/h)	3533	3533
Std. Ideal Liq. Mass Density (kg/m3)	422.5	422.5
Act. Liq. Flow (barrel/day)	---	---
Z Factor	0.9939	0.9939
Watson K	14.65	14.65
User Property	---	---
Partial Pressure of H2S (psig)	-14.70	---
Cp/(Cp - R)	1.270	1.270
Cp/Cv	1.280	1.280
Heat of Vap. (kJ/kgmole)	1.689e+004	---
Kinematic Viscosity (cSt)	5.810	5.810
Liq. Mass Density (Std. Cond) (kg/m3)	0.9887	0.9887
Liq. Vol. Flow (Std. Cond) (barrel/day)	5.315e+005	5.315e+005
Liquid Fraction	0.0000	0.0000
Molar Volume (m3/kgmole)	10.76	10.76
Mass Heat of Vap. (kJ/kg)	724.8	---
Phase Fraction [Molar Basis]	1.0000	1.0000
Surface Tension (dyne/cm)	---	---
Thermal Conductivity (W/m-K)	3.003e-002	3.003e-002
Viscosity (cP)	1.258e-002	1.258e-002
Cv (Semi-Ideal) (kJ/kgmole-C)	30.81	30.81
Mass Cv (Semi-Ideal) (kJ/kg-C)	1.322	1.322
Cv (kJ/kgmole-C)	30.57	30.57
Mass Cv (kJ/kg-C)	1.312	1.312
Cv (Ent. Method) (kJ/kgmole-C)	---	---
Mass Cv (Ent. Method) (kJ/kg-C)	---	---
Cp/Cv (Ent. Method)	---	---

Licensed to: PETROCHEMICAL ENGINEERIN
* Specified by user.

Material Stream: 13 (continued)

Fluid Package: Basis-1
Property Package: Peng-Robinson

PROPERTIES

	Overall	Vapour Phase			
Reid VP at 37.8 C (psig)	---	---			
True VP at 37.8 C (psig)	---	---			
Liq. Vol. Flow - Sum(Std. Cond) (barrel/day)	5.315e+005	5.315e+005			
HHV Molar Basis (Std) (Btu/SCF)	---	---			
HHV Mass Basis (Std) (kJ/kg)	---	---			
CO2 Loading	---	---			
CO2 App ML Con (kgmole/m3)	---	---			
CO2 App WT Con (kgmol/kg)	---	---			
Phase Fraction [Act. Vol. Basis]	1.000	1.000			
Mass Exergy (kJ/kg)	91.44	---			
Viscosity Index	-9.036	---			
Ideal Gas Cp/Cv	1.272	1.272			
Ideal Gas Cp (kJ/kgmole-C)	38.85	38.85			
Mass Ideal Gas Cp (kJ/kg-C)	1.667	1.667			
Bubble Point Pressure (psig)	---	---			

COMPOSITION

Overall Phase

Vapour Fraction 1.0000

COMPONENTS	MOLAR FLOW (kgmole/h)	MOLE FRACTION	MASS FLOW (tonne/d)	MASS FRACTION	LIQUID VOLUME FLOW (m3/h)	LIQUID VOLUME FRACTION
Methane	104.8854	0.7020	40.3840	0.4834	5.6202	0.6821
Ethane	6.7722	0.0453	4.8874	0.0585	0.5725	0.0695
Propane	1.8266	0.0122	1.9332	0.0231	0.1590	0.0193
i-Butane	0.2819	0.0019	0.3932	0.0047	0.0292	0.0035
n-Butane	0.5681	0.0038	0.7925	0.0095	0.0566	0.0069
i-Pentane	0.1308	0.0009	0.2266	0.0027	0.0151	0.0018
n-Pentane	0.1317	0.0009	0.2281	0.0027	0.0151	0.0018
n-Hexane	0.3445	0.0023	0.7126	0.0085	0.0448	0.0054
Nitrogen	7.1062	0.0476	4.7776	0.0572	0.2469	0.0300
CO2	26.9965	0.1807	28.5146	0.3413	1.4395	0.1747
H2S	0.0000	0.0000	0.0000	0.0000	0.0000	0.0000
H2O	0.0349	0.0002	0.0151	0.0002	0.0006	0.0001
NBP[1]95*	0.0403	0.0003	0.0657	0.0008	0.0040	0.0005
NBP[1]121*	0.0421	0.0003	0.0736	0.0009	0.0045	0.0005
NBP[1]147*	0.0446	0.0003	0.0858	0.0010	0.0051	0.0006
NBP[1]171*	0.0671	0.0004	0.1411	0.0017	0.0083	0.0010
NBP[1]195*	0.0655	0.0004	0.1470	0.0018	0.0085	0.0010
NBP[1]222*	0.0323	0.0002	0.0779	0.0009	0.0045	0.0005
NBP[1]248*	0.0172	0.0001	0.0447	0.0005	0.0025	0.0003
NBP[1]273*	0.0085	0.0001	0.0236	0.0003	0.0013	0.0002
NBP[1]299*	0.0039	0.0000	0.0116	0.0001	0.0006	0.0001
NBP[1]325*	0.0016	0.0000	0.0050	0.0001	0.0003	0.0000
NBP[1]351*	0.0007	0.0000	0.0023	0.0000	0.0001	0.0000
NBP[1]377*	0.0003	0.0000	0.0012	0.0000	0.0001	0.0000
NBP[1]402*	0.0001	0.0000	0.0006	0.0000	0.0000	0.0000
NBP[1]428*	0.0001	0.0000	0.0003	0.0000	0.0000	0.0000
NBP[1]454*	0.0000	0.0000	0.0001	0.0000	0.0000	0.0000
NBP[1]480*	0.0000	0.0000	0.0001	0.0000	0.0000	0.0000
NBP[1]505*	0.0000	0.0000	0.0000	0.0000	0.0000	0.0000
NBP[1]531*	0.0000	0.0000	0.0000	0.0000	0.0000	0.0000
NBP[1]557*	0.0000	0.0000	0.0000	0.0000	0.0000	0.0000
NBP[1]582*	0.0000	0.0000	0.0000	0.0000	0.0000	0.0000
NBP[1]608*	0.0000	0.0000	0.0000	0.0000	0.0000	0.0000
NBP[1]634*	0.0000	0.0000	0.0000	0.0000	0.0000	0.0000
NBP[1]659*	0.0000	0.0000	0.0000	0.0000	0.0000	0.0000
NBP[1]685*	0.0000	0.0000	0.0000	0.0000	0.0000	0.0000

* Specified by user.

Material Stream: 13 (continued)

Fluid Package: Basis-1
Property Package: Peng-Robinson

COMPOSITION

Overall Phase (continued)

Vapour Fraction 1.0000

COMPONENTS	MOLAR FLOW (kgmole/h)	MOLE FRACTION	MASS FLOW (tonne/d)	MASS FRACTION	LIQUID VOLUME FLOW (m3/h)	LIQUID VOLUME FRACTION
NBP[1]711*	0.0000	0.0000	0.0000	0.0000	0.0000	0.0000
NBP[1]736*	0.0000	0.0000	0.0000	0.0000	0.0000	0.0000
NBP[1]762*	0.0000	0.0000	0.0000	0.0000	0.0000	0.0000
NBP[1]788*	0.0000	0.0000	0.0000	0.0000	0.0000	0.0000
NBP[1]825*	0.0000	0.0000	0.0000	0.0000	0.0000	0.0000
NBP[1]873*	0.0000	0.0000	0.0000	0.0000	0.0000	0.0000
NBP[1]926*	0.0000	0.0000	0.0000	0.0000	0.0000	0.0000
NBP[1]978*	0.0000	0.0000	0.0000	0.0000	0.0000	0.0000
NBP[1]1021*	0.0000	0.0000	0.0000	0.0000	0.0000	0.0000
NBP[1]1075*	0.0000	0.0000	0.0000	0.0000	0.0000	0.0000
NBP[1]1123*	0.0000	0.0000	0.0000	0.0000	0.0000	0.0000
NBP[1]1173*	0.0000	0.0000	0.0000	0.0000	0.0000	0.0000
NBP[1]1250*	0.0000	0.0000	0.0000	0.0000	0.0000	0.0000
NBP[1]1339*	0.0000	0.0000	0.0000	0.0000	0.0000	0.0000
NBP[1]1432*	0.0000	0.0000	0.0000	0.0000	0.0000	0.0000
NBP[1]1528*	0.0000	0.0000	0.0000	0.0000	0.0000	0.0000
NBP[1]1637*	0.0000	0.0000	0.0000	0.0000	0.0000	0.0000
NBP[1]1732*	0.0000	0.0000	0.0000	0.0000	0.0000	0.0000
NBP[1]1819*	0.0000	0.0000	0.0000	0.0000	0.0000	0.0000
NBP[1]1913*	0.0000	0.0000	0.0000	0.0000	0.0000	0.0000
Total	149.4032	1.0000	83.5454	1.0000	8.2394	1.0000

Vapour Phase

Phase Fraction 1.000

COMPONENTS	MOLAR FLOW (kgmole/h)	MOLE FRACTION	MASS FLOW (tonne/d)	MASS FRACTION	LIQUID VOLUME FLOW (m3/h)	LIQUID VOLUME FRACTION
Methane	104.8854	0.7020	40.3840	0.4834	5.6202	0.6821
Ethane	6.7722	0.0453	4.8874	0.0585	0.5725	0.0695
Propane	1.8266	0.0122	1.9332	0.0231	0.1590	0.0193
i-Butane	0.2819	0.0019	0.3932	0.0047	0.0292	0.0035
n-Butane	0.5681	0.0038	0.7925	0.0095	0.0566	0.0069
i-Pentane	0.1308	0.0009	0.2266	0.0027	0.0151	0.0018
n-Pentane	0.1317	0.0009	0.2281	0.0027	0.0151	0.0018
n-Hexane	0.3445	0.0023	0.7126	0.0085	0.0448	0.0054
Nitrogen	7.1062	0.0476	4.7776	0.0572	0.2469	0.0300
CO2	26.9965	0.1807	28.5146	0.3413	1.4395	0.1747
H2S	0.0000	0.0000	0.0000	0.0000	0.0000	0.0000
H2O	0.0349	0.0002	0.0151	0.0002	0.0006	0.0001
NBP[1]95*	0.0403	0.0003	0.0657	0.0008	0.0040	0.0005
NBP[1]121*	0.0421	0.0003	0.0736	0.0009	0.0045	0.0005
NBP[1]147*	0.0446	0.0003	0.0858	0.0010	0.0051	0.0006
NBP[1]171*	0.0671	0.0004	0.1411	0.0017	0.0083	0.0010
NBP[1]195*	0.0655	0.0004	0.1470	0.0018	0.0085	0.0010
NBP[1]222*	0.0323	0.0002	0.0779	0.0009	0.0045	0.0005
NBP[1]248*	0.0172	0.0001	0.0447	0.0005	0.0025	0.0003
NBP[1]273*	0.0085	0.0001	0.0236	0.0003	0.0013	0.0002
NBP[1]299*	0.0039	0.0000	0.0116	0.0001	0.0006	0.0001
NBP[1]325*	0.0016	0.0000	0.0050	0.0001	0.0003	0.0000
NBP[1]351*	0.0007	0.0000	0.0023	0.0000	0.0001	0.0000
NBP[1]377*	0.0003	0.0000	0.0012	0.0000	0.0001	0.0000
NBP[1]402*	0.0001	0.0000	0.0006	0.0000	0.0000	0.0000
NBP[1]428*	0.0001	0.0000	0.0003	0.0000	0.0000	0.0000
NBP[1]454*	0.0000	0.0000	0.0001	0.0000	0.0000	0.0000
NBP[1]480*	0.0000	0.0000	0.0001	0.0000	0.0000	0.0000
NBP[1]505*	0.0000	0.0000	0.0000	0.0000	0.0000	0.0000

* Specified by user.

Material Stream: 13 (continued)

Fluid Package: Basis-1
Property Package: Peng-Robinson

COMPOSITION

Vapour Phase (continued)

Phase Fraction 1.000

COMPONENTS	MOLAR FLOW (kgmole/h)	MOLE FRACTION	MASS FLOW (tonne/d)	MASS FRACTION	LIQUID VOLUME FLOW (m3/h)	LIQUID VOLUME FRACTION
NBP[1]531*	0.0000	0.0000	0.0000	0.0000	0.0000	0.0000
NBP[1]557*	0.0000	0.0000	0.0000	0.0000	0.0000	0.0000
NBP[1]582*	0.0000	0.0000	0.0000	0.0000	0.0000	0.0000
NBP[1]608*	0.0000	0.0000	0.0000	0.0000	0.0000	0.0000
NBP[1]634*	0.0000	0.0000	0.0000	0.0000	0.0000	0.0000
NBP[1]659*	0.0000	0.0000	0.0000	0.0000	0.0000	0.0000
NBP[1]685*	0.0000	0.0000	0.0000	0.0000	0.0000	0.0000
NBP[1]711*	0.0000	0.0000	0.0000	0.0000	0.0000	0.0000
NBP[1]736*	0.0000	0.0000	0.0000	0.0000	0.0000	0.0000
NBP[1]762*	0.0000	0.0000	0.0000	0.0000	0.0000	0.0000
NBP[1]788*	0.0000	0.0000	0.0000	0.0000	0.0000	0.0000
NBP[1]825*	0.0000	0.0000	0.0000	0.0000	0.0000	0.0000
NBP[1]873*	0.0000	0.0000	0.0000	0.0000	0.0000	0.0000
NBP[1]926*	0.0000	0.0000	0.0000	0.0000	0.0000	0.0000
NBP[1]978*	0.0000	0.0000	0.0000	0.0000	0.0000	0.0000
NBP[1]1021*	0.0000	0.0000	0.0000	0.0000	0.0000	0.0000
NBP[1]1075*	0.0000	0.0000	0.0000	0.0000	0.0000	0.0000
NBP[1]1123*	0.0000	0.0000	0.0000	0.0000	0.0000	0.0000
NBP[1]1173*	0.0000	0.0000	0.0000	0.0000	0.0000	0.0000
NBP[1]1250*	0.0000	0.0000	0.0000	0.0000	0.0000	0.0000
NBP[1]1339*	0.0000	0.0000	0.0000	0.0000	0.0000	0.0000
NBP[1]1432*	0.0000	0.0000	0.0000	0.0000	0.0000	0.0000
NBP[1]1528*	0.0000	0.0000	0.0000	0.0000	0.0000	0.0000
NBP[1]1637*	0.0000	0.0000	0.0000	0.0000	0.0000	0.0000
NBP[1]1732*	0.0000	0.0000	0.0000	0.0000	0.0000	0.0000
NBP[1]1819*	0.0000	0.0000	0.0000	0.0000	0.0000	0.0000
NBP[1]1913*	0.0000	0.0000	0.0000	0.0000	0.0000	0.0000
Total	149.4032	1.0000	83.5454	1.0000	8.2394	1.0000

Material Stream: FLASH-G

Fluid Package: Basis-1
Property Package: Peng-Robinson

CONDITIONS

		Overall
Vapour / Phase Fraction		---
Temperature:	(F)	---
Pressure:	(psig)	450.0
Molar Flow	(MMSCFD)	0.1359
Mass Flow	(tonne/d)	6.156 *
Std Ideal Liq Vol Flow	(barrel/day)	80.89
Molar Enthalpy	(kJ/kgmole)	---
Molar Entropy	(kJ/kgmole-C)	---
Heat Flow	(MMBtu/hr)	---
Liq Vol Flow @Std Cond	(barrel/day)	87.30 *

PROPERTIES

		Overall
Molecular Weight		37.88
Molar Density	(kgmole/m3)	---
Mass Density	(kg/m3)	---
Act. Volume Flow	(barrel/day)	---
Mass Enthalpy	(kJ/kg)	---
Mass Entropy	(kJ/kg-C)	---
Heat Capacity	(kJ/kgmole-C)	---

* Specified by user.

Material Stream: FLASH-G (continued)

Fluid Package: Basis-1
Property Package: Peng-Robinson

PROPERTIES

	Overall
Mass Heat Capacity (kJ/kg-C)	---
LHV Molar Basis (Std) (Btu/SCF)	---
LHV Mass Basis (Std) (kJ/kg)	---
Phase Fraction [Vol. Basis]	0.0000
Phase Fraction [Mass Basis]	0.0000
Partial Pressure of CO2 (psig)	-14.70
Cost Based on Flow (Cost/s)	0.0000
Act. Gas Flow (ACT_m3/h)	---
Avg. Liq. Density (kgmole/m3)	12.64
Specific Heat (kJ/kgmole-C)	---
Std. Gas Flow (STD_m3/h)	160.1
Std. Ideal Liq. Mass Density (kg/m3)	478.7
Act. Liq. Flow (barrel/day)	---
Z Factor	---
Watson K	14.89
User Property	---
Partial Pressure of H2S (psig)	-14.70
Cp/(Cp - R)	---
Cp/Cv	---
Heat of Vap. (kJ/kgmole)	---
Kinematic Viscosity (cSt)	---
Liq. Mass Density (Std. Cond) (kg/m3)	443.5
Liq. Vol. Flow (Std. Cond) (barrel/day)	87.30
Liquid Fraction	---
Molar Volume (m3/kgmole)	---
Mass Heat of Vap. (kJ/kg)	---
Phase Fraction [Molar Basis]	---
Surface Tension (dyne/cm)	---
Thermal Conductivity (W/m-K)	---
Viscosity (cP)	---
Cv (Semi-Ideal) (kJ/kgmole-C)	---
Mass Cv (Semi-Ideal) (kJ/kg-C)	---
Cv (kJ/kgmole-C)	---
Mass Cv (kJ/kg-C)	---
Cv (Ent. Method) (kJ/kgmole-C)	---
Mass Cv (Ent. Method) (kJ/kg-C)	---
Cp/Cv (Ent. Method)	---
Reid VP at 37.8 C (psig)	---
True VP at 37.8 C (psig)	---
Liq. Vol. Flow - Sum(Std. Cond) (barrel/day)	0.0000
HHV Molar Basis (Std) (Btu/SCF)	---
HHV Mass Basis (Std) (kJ/kg)	---
CO2 Loading	---
CO2 App ML Con (kgmole/m3)	---
CO2 App WT Con (kgmol/kg)	1.012e-003
Phase Fraction [Act. Vol. Basis]	0.0000
Mass Exergy (kJ/kg)	9.741e+006
Viscosity Index	---
Ideal Gas Cp/Cv	1.000
Ideal Gas Cp (kJ/kgmole-C)	6.915e+007
Mass Ideal Gas Cp (kJ/kg-C)	1.825e+006
Bubble Point Pressure (psig)	---

* Specified by user.

Material Stream: FLASH-G (continued)

Fluid Package: Basis-1
Property Package: Peng-Robinson

COMPOSITION

Overall Phase

Vapour Fraction ---

COMPONENTS	MOLAR FLOW (kgmole/h)	MOLE FRACTION	MASS FLOW (tonne/d)	MASS FRACTION	LIQUID VOLUME FLOW (m3/h)	LIQUID VOLUME FRACTION
Methane	2.2576 *	0.3334 *	0.8692 *	0.1412 *	0.1210 *	0.2258 *
Ethane	1.1838 *	0.1748 *	0.8543 *	0.1388 *	0.1001 *	0.1868 *
Propane	1.4351 *	0.2120 *	1.5188 *	0.2467 *	0.1249 *	0.2331 *
i-Butane	0.2831 *	0.0418 *	0.3950 *	0.0642 *	0.0293 *	0.0547 *
n-Butane	0.5947 *	0.0878 *	0.8295 *	0.1348 *	0.0593 *	0.1106 *
i-Pentane	0.1287 *	0.0190 *	0.2228 *	0.0362 *	0.0149 *	0.0278 *
n-Pentane	0.1372 *	0.0203 *	0.2376 *	0.0386 *	0.0157 *	0.0293 *
n-Hexane	0.1223 *	0.0181 *	0.2530 *	0.0411 *	0.0159 *	0.0297 *
Nitrogen	0.0260 *	0.0038 *	0.0175 *	0.0028 *	0.0009 *	0.0017 *
CO2	0.2597 *	0.0384 *	0.2743 *	0.0446 *	0.0138 *	0.0258 *
H2S	0.0000 *	0.0000 *	0.0000 *	0.0000 *	0.0000 *	0.0000 *
H2O	0.0116 *	0.0017 *	0.0050 *	0.0008 *	0.0002 *	0.0004 *
NBP[1]95*	0.0492 *	0.0073 *	0.0802 *	0.0130 *	0.0049 *	0.0092 *
NBP[1]121*	0.0494 *	0.0073 *	0.0863 *	0.0140 *	0.0052 *	0.0097 *
NBP[1]147*	0.0493 *	0.0073 *	0.0948 *	0.0154 *	0.0056 *	0.0105 *
NBP[1]171*	0.0691 *	0.0102 *	0.1455 *	0.0236 *	0.0085 *	0.0159 *
NBP[1]195*	0.0624 *	0.0092 *	0.1401 *	0.0228 *	0.0081 *	0.0151 *
NBP[1]222*	0.0278 *	0.0041 *	0.0672 *	0.0109 *	0.0038 *	0.0072 *
NBP[1]248*	0.0135 *	0.0020 *	0.0350 *	0.0057 *	0.0020 *	0.0037 *
NBP[1]273*	0.0061 *	0.0009 *	0.0169 *	0.0027 *	0.0009 *	0.0018 *
NBP[1]299*	0.0026 *	0.0004 *	0.0076 *	0.0012 *	0.0004 *	0.0008 *
NBP[1]325*	0.0010 *	0.0001 *	0.0030 *	0.0005 *	0.0002 *	0.0003 *
NBP[1]351*	0.0004 *	0.0001 *	0.0013 *	0.0002 *	0.0001 *	0.0001 *
NBP[1]377*	0.0002 *	0.0000 *	0.0006 *	0.0001 *	0.0000 *	0.0001 *
NBP[1]402*	0.0001 *	0.0000 *	0.0003 *	0.0000 *	0.0000 *	0.0000 *
NBP[1]428*	0.0000 *	0.0000 *	0.0001 *	0.0000 *	0.0000 *	0.0000 *
NBP[1]454*	0.0000 *	0.0000 *	0.0001 *	0.0000 *	0.0000 *	0.0000 *
NBP[1]480*	0.0000 *	0.0000 *	0.0000 *	0.0000 *	0.0000 *	0.0000 *
NBP[1]505*	0.0000 *	0.0000 *	0.0000 *	0.0000 *	0.0000 *	0.0000 *
NBP[1]531*	0.0000 *	0.0000 *	0.0000 *	0.0000 *	0.0000 *	0.0000 *
NBP[1]557*	0.0000 *	0.0000 *	0.0000 *	0.0000 *	0.0000 *	0.0000 *
NBP[1]582*	0.0000 *	0.0000 *	0.0000 *	0.0000 *	0.0000 *	0.0000 *
NBP[1]608*	0.0000 *	0.0000 *	0.0000 *	0.0000 *	0.0000 *	0.0000 *
NBP[1]634*	0.0000 *	0.0000 *	0.0000 *	0.0000 *	0.0000 *	0.0000 *
NBP[1]659*	0.0000 *	0.0000 *	0.0000 *	0.0000 *	0.0000 *	0.0000 *
NBP[1]685*	0.0000 *	0.0000 *	0.0000 *	0.0000 *	0.0000 *	0.0000 *
NBP[1]711*	0.0000 *	0.0000 *	0.0000 *	0.0000 *	0.0000 *	0.0000 *
NBP[1]736*	0.0000 *	0.0000 *	0.0000 *	0.0000 *	0.0000 *	0.0000 *
NBP[1]762*	0.0000 *	0.0000 *	0.0000 *	0.0000 *	0.0000 *	0.0000 *
NBP[1]788*	0.0000 *	0.0000 *	0.0000 *	0.0000 *	0.0000 *	0.0000 *
NBP[1]825*	0.0000 *	0.0000 *	0.0000 *	0.0000 *	0.0000 *	0.0000 *
NBP[1]873*	0.0000 *	0.0000 *	0.0000 *	0.0000 *	0.0000 *	0.0000 *
NBP[1]926*	0.0000 *	0.0000 *	0.0000 *	0.0000 *	0.0000 *	0.0000 *
NBP[1]978*	0.0000 *	0.0000 *	0.0000 *	0.0000 *	0.0000 *	0.0000 *
NBP[1]1021*	0.0000 *	0.0000 *	0.0000 *	0.0000 *	0.0000 *	0.0000 *
NBP[1]1075*	0.0000 *	0.0000 *	0.0000 *	0.0000 *	0.0000 *	0.0000 *
NBP[1]1123*	0.0000 *	0.0000 *	0.0000 *	0.0000 *	0.0000 *	0.0000 *
NBP[1]1173*	0.0000 *	0.0000 *	0.0000 *	0.0000 *	0.0000 *	0.0000 *
NBP[1]1250*	0.0000 *	0.0000 *	0.0000 *	0.0000 *	0.0000 *	0.0000 *
NBP[1]1339*	0.0000 *	0.0000 *	0.0000 *	0.0000 *	0.0000 *	0.0000 *
NBP[1]1432*	0.0000 *	0.0000 *	0.0000 *	0.0000 *	0.0000 *	0.0000 *
NBP[1]1528*	0.0000 *	0.0000 *	0.0000 *	0.0000 *	0.0000 *	0.0000 *
NBP[1]1637*	0.0000 *	0.0000 *	0.0000 *	0.0000 *	0.0000 *	0.0000 *
NBP[1]1732*	0.0000 *	0.0000 *	0.0000 *	0.0000 *	0.0000 *	0.0000 *

Licensed to: PETROCHEMICAL ENGINEERIN
* Specified by user.

Material Stream: FLASH-G (continued)

Fluid Package: Basis-1
Property Package: Peng-Robinson

COMPOSITION

Overall Phase (continued)

Vapour Fraction ---

COMPONENTS	MOLAR FLOW (kgmole/h)	MOLE FRACTION	MASS FLOW (tonne/d)	MASS FRACTION	LIQUID VOLUME FLOW (m3/h)	LIQUID VOLUME FRACTION
NBP[1]1819*	0.0000 *	0.0000 *	0.0000 *	0.0000 *	0.0000 *	0.0000 *
NBP[1]1913*	0.0000 *	0.0000 *	0.0000 *	0.0000 *	0.0000 *	0.0000 *
Total	6.7707	1.0000	6.1561	1.0000	0.5358	1.0000

Material Stream: Gas-PRD

Fluid Package: Basis-1
Property Package: Peng-Robinson

CONDITIONS

		Overall
Vapour / Phase Fraction		---
Temperature:	(F)	---
Pressure:	(psig)	450.0 *
Molar Flow	(MMSCFD)	5.400 *
Mass Flow	(tonne/d)	139.4
Std Ideal Liq Vol Flow	(barrel/day)	2425
Molar Enthalpy	(kJ/kgmole)	---
Molar Entropy	(kJ/kgmole-C)	---
Heat Flow	(MMBtu/hr)	---
Liq Vol Flow @Std Cond	(barrel/day)	9.561e+005 *

PROPERTIES

		Overall
Molecular Weight		21.60
Molar Density	(kgmole/m3)	---
Mass Density	(kg/m3)	---
Act. Volume Flow	(barrel/day)	---
Mass Enthalpy	(kJ/kg)	---
Mass Entropy	(kJ/kg-C)	---
Heat Capacity	(kJ/kgmole-C)	---
Mass Heat Capacity	(kJ/kg-C)	---
LHV Molar Basis (Std)	(Btu/SCF)	1078
LHV Mass Basis (Std)	(kJ/kg)	4.406e+004
Phase Fraction [Vol. Basis]		0.0000
Phase Fraction [Mass Basis]		0.0000
Partial Pressure of CO2	(psig)	-14.70
Cost Based on Flow	(Cost/s)	0.0000
Act. Gas Flow	(ACT_m3/h)	---
Avg. Liq. Density	(kgmole/m3)	16.75
Specific Heat	(kJ/kgmole-C)	---
Std. Gas Flow	(STD_m3/h)	6359
Std. Ideal Liq. Mass Density	(kg/m3)	361.7
Act. Liq. Flow	(barrel/day)	---
Z Factor		---
Watson K		17.22
User Property		---
Partial Pressure of H2S	(psig)	-14.70
Cp/(Cp - R)		---
Cp/Cv		---
Heat of Vap.	(kJ/kgmole)	---
Kinematic Viscosity	(cSt)	---
Liq. Mass Density (Std. Cond)	(kg/m3)	0.9172
Liq. Vol. Flow (Std. Cond)	(barrel/day)	9.561e+005
Liquid Fraction		---
Molar Volume	(m3/kgmole)	---

* Specified by user.

Material Stream: Gas-PRD (continued)

Fluid Package: Basis-1
Property Package: Peng-Robinson

PROPERTIES

		Overall				
Mass Heat of Vap.	(kJ/kg)	---				
Phase Fraction [Molar Basis]		---				
Surface Tension	(dyne/cm)	---				
Thermal Conductivity	(W/m-K)	---				
Viscosity	(cP)	---				
Cv (Semi-Ideal)	(kJ/kgmole-C)	---				
Mass Cv (Semi-Ideal)	(kJ/kg-C)	---				
Cv	(kJ/kgmole-C)	---				
Mass Cv	(kJ/kg-C)	---				
Cv (Ent. Method)	(kJ/kgmole-C)	---				
Mass Cv (Ent. Method)	(kJ/kg-C)	---				
Cp/Cv (Ent. Method)		---				
Reid VP at 37.8 C	(psig)	---				
True VP at 37.8 C	(psig)	---				
Liq. Vol. Flow - Sum(Std. Cond)	(barrel/day)	0.0000				
HHV Molar Basis (Std)	(Btu/SCF)	1181				
HHV Mass Basis (Std)	(kJ/kg)	4.824e+004				
CO2 Loading		---				
CO2 App ML Con	(kgmole/m3)	---				
CO2 App WT Con	(kgmol/kg)	1.576e-003				
Phase Fraction [Act. Vol. Basis]		0.0000				
Mass Exergy	(kJ/kg)	9.743e+006				
Viscosity Index		---				
Ideal Gas Cp/Cv		1.000				
Ideal Gas Cp	(kJ/kgmole-C)	8.446e+007				
Mass Ideal Gas Cp	(kJ/kg-C)	3.911e+006				
Bubble Point Pressure	(psig)	---				

COMPOSITION

Overall Phase

Vapour Fraction ---

COMPONENTS	MOLAR FLOW (kgmole/h)	MOLE FRACTION	MASS FLOW (tonne/d)	MASS FRACTION	LIQUID VOLUME FLOW (m3/h)	LIQUID VOLUME FRACTION
Methane	204.7864 *	0.7614 *	78.8488 *	0.5656 *	10.9734 *	0.6832 *
Ethane	27.6169 *	0.1027 *	19.9305 *	0.1430 *	2.3348 *	0.1454 *
Propane	13.8326 *	0.0514 *	14.6395 *	0.1050 *	1.2039 *	0.0750 *
i-Butane	1.7456 *	0.0065 *	2.4350 *	0.0175 *	0.1805 *	0.0112 *
n-Butane	3.3566 *	0.0125 *	4.6824 *	0.0336 *	0.3345 *	0.0208 *
i-Pentane	0.7208 *	0.0027 *	1.2482 *	0.0090 *	0.0834 *	0.0052 *
n-Pentane	0.8230 *	0.0031 *	1.4252 *	0.0102 *	0.0943 *	0.0059 *
n-Hexane	1.3475 *	0.0050 *	2.7870 *	0.0200 *	0.1752 *	0.0109 *
Nitrogen	5.5729 *	0.0207 *	3.7467 *	0.0269 *	0.1936 *	0.0121 *
CO2	9.1554 *	0.0340 *	9.6702 *	0.0694 *	0.4882 *	0.0304 *
H2S	0.0005 *	0.0000 *	0.0004 *	0.0000 *	0.0000 *	0.0000 *
H2O	0.0000 *	0.0000 *	0.0000 *	0.0000 *	0.0000 *	0.0000 *
NBP[1]95*	0.0000 *	0.0000 *	0.0000 *	0.0000 *	0.0000 *	0.0000 *
NBP[1]121*	0.0000 *	0.0000 *	0.0000 *	0.0000 *	0.0000 *	0.0000 *
NBP[1]147*	0.0000 *	0.0000 *	0.0000 *	0.0000 *	0.0000 *	0.0000 *
NBP[1]171*	0.0000 *	0.0000 *	0.0000 *	0.0000 *	0.0000 *	0.0000 *
NBP[1]195*	0.0000 *	0.0000 *	0.0000 *	0.0000 *	0.0000 *	0.0000 *
NBP[1]222*	0.0000 *	0.0000 *	0.0000 *	0.0000 *	0.0000 *	0.0000 *
NBP[1]248*	0.0000 *	0.0000 *	0.0000 *	0.0000 *	0.0000 *	0.0000 *
NBP[1]273*	0.0000 *	0.0000 *	0.0000 *	0.0000 *	0.0000 *	0.0000 *
NBP[1]299*	0.0000 *	0.0000 *	0.0000 *	0.0000 *	0.0000 *	0.0000 *
NBP[1]325*	0.0000 *	0.0000 *	0.0000 *	0.0000 *	0.0000 *	0.0000 *
NBP[1]351*	0.0000 *	0.0000 *	0.0000 *	0.0000 *	0.0000 *	0.0000 *
NBP[1]377*	0.0000 *	0.0000 *	0.0000 *	0.0000 *	0.0000 *	0.0000 *

* Specified by user.

Material Stream: Gas-PRD (continued)

Fluid Package: Basis-1
Property Package: Peng-Robinson

COMPOSITION

Overall Phase (continued)

Vapour Fraction ---

COMPONENTS	MOLAR FLOW (kgmole/h)	MOLE FRACTION	MASS FLOW (tonne/d)	MASS FRACTION	LIQUID VOLUME FLOW (m3/h)	LIQUID VOLUME FRACTION
NBP[1]402*	0.0000 *	0.0000 *	0.0000 *	0.0000 *	0.0000 *	0.0000 *
NBP[1]428*	0.0000 *	0.0000 *	0.0000 *	0.0000 *	0.0000 *	0.0000 *
NBP[1]454*	0.0000 *	0.0000 *	0.0000 *	0.0000 *	0.0000 *	0.0000 *
NBP[1]480*	0.0000 *	0.0000 *	0.0000 *	0.0000 *	0.0000 *	0.0000 *
NBP[1]505*	0.0000 *	0.0000 *	0.0000 *	0.0000 *	0.0000 *	0.0000 *
NBP[1]531*	0.0000 *	0.0000 *	0.0000 *	0.0000 *	0.0000 *	0.0000 *
NBP[1]557*	0.0000 *	0.0000 *	0.0000 *	0.0000 *	0.0000 *	0.0000 *
NBP[1]582*	0.0000 *	0.0000 *	0.0000 *	0.0000 *	0.0000 *	0.0000 *
NBP[1]608*	0.0000 *	0.0000 *	0.0000 *	0.0000 *	0.0000 *	0.0000 *
NBP[1]634*	0.0000 *	0.0000 *	0.0000 *	0.0000 *	0.0000 *	0.0000 *
NBP[1]659*	0.0000 *	0.0000 *	0.0000 *	0.0000 *	0.0000 *	0.0000 *
NBP[1]685*	0.0000 *	0.0000 *	0.0000 *	0.0000 *	0.0000 *	0.0000 *
NBP[1]711*	0.0000 *	0.0000 *	0.0000 *	0.0000 *	0.0000 *	0.0000 *
NBP[1]736*	0.0000 *	0.0000 *	0.0000 *	0.0000 *	0.0000 *	0.0000 *
NBP[1]762*	0.0000 *	0.0000 *	0.0000 *	0.0000 *	0.0000 *	0.0000 *
NBP[1]788*	0.0000 *	0.0000 *	0.0000 *	0.0000 *	0.0000 *	0.0000 *
NBP[1]825*	0.0000 *	0.0000 *	0.0000 *	0.0000 *	0.0000 *	0.0000 *
NBP[1]873*	0.0000 *	0.0000 *	0.0000 *	0.0000 *	0.0000 *	0.0000 *
NBP[1]926*	0.0000 *	0.0000 *	0.0000 *	0.0000 *	0.0000 *	0.0000 *
NBP[1]978*	0.0000 *	0.0000 *	0.0000 *	0.0000 *	0.0000 *	0.0000 *
NBP[1]1021*	0.0000 *	0.0000 *	0.0000 *	0.0000 *	0.0000 *	0.0000 *
NBP[1]1075*	0.0000 *	0.0000 *	0.0000 *	0.0000 *	0.0000 *	0.0000 *
NBP[1]1123*	0.0000 *	0.0000 *	0.0000 *	0.0000 *	0.0000 *	0.0000 *
NBP[1]1173*	0.0000 *	0.0000 *	0.0000 *	0.0000 *	0.0000 *	0.0000 *
NBP[1]1250*	0.0000 *	0.0000 *	0.0000 *	0.0000 *	0.0000 *	0.0000 *
NBP[1]1339*	0.0000 *	0.0000 *	0.0000 *	0.0000 *	0.0000 *	0.0000 *
NBP[1]1432*	0.0000 *	0.0000 *	0.0000 *	0.0000 *	0.0000 *	0.0000 *
NBP[1]1528*	0.0000 *	0.0000 *	0.0000 *	0.0000 *	0.0000 *	0.0000 *
NBP[1]1637*	0.0000 *	0.0000 *	0.0000 *	0.0000 *	0.0000 *	0.0000 *
NBP[1]1732*	0.0000 *	0.0000 *	0.0000 *	0.0000 *	0.0000 *	0.0000 *
NBP[1]1819*	0.0000 *	0.0000 *	0.0000 *	0.0000 *	0.0000 *	0.0000 *
NBP[1]1913*	0.0000 *	0.0000 *	0.0000 *	0.0000 *	0.0000 *	0.0000 *
Total	268.9582	1.0000	139.4139	1.0000	16.0619	1.0000

Material Stream: Pandhi

Fluid Package: Basis-1
Property Package: Peng-Robinson

CONDITIONS

		Overall	Vapour Phase	Liquid Phase	Aqueous Phase
Vapour / Phase Fraction		0.6833	0.6833	0.0455	0.2712
Temperature:	(F)	85.00 *	85.00	85.00	85.00
Pressure:	(psig)	450.0 *	450.0	450.0	450.0
Molar Flow	(MMSCFD)	7.874	5.380	0.3586	2.135
Mass Flow	(tonne/d)	237.5	137.5	54.03	46.00
Std Ideal Liq Vol Flow	(barrel/day)	3142	2402	450.0	290.0
Molar Enthalpy	(kJ/kgmole)	-1.516e+005	-8.928e+004	-2.868e+005	-2.859e+005
Molar Entropy	(kJ/kgmole-C)	133.6	159.2	218.5	54.86
Heat Flow	(MMBtu/hr)	-56.34	-22.68	-4.856	-28.81
Liq Vol Flow @Std Cond	(barrel/day)	2.954e+005 *	9.526e+005	434.8	285.1

PROPERTIES

		Overall	Vapour Phase	Liquid Phase	Aqueous Phase
Molecular Weight		25.24	21.38	126.0	18.03
Molar Density	(kgmole/m3)	2.032	1.424	6.091	55.76

* Specified by user.

Material Stream: Pandhi (continued)

Fluid Package: Basis-1
Property Package: Peng-Robinson

PROPERTIES

	Overall	Vapour Phase	Liquid Phase	Aqueous Phase
Mass Density (kg/m3)	51.28	30.45	767.6	1005
Act. Volume Flow (barrel/day)	2.914e+004	2.841e+004	442.7	287.9
Mass Enthalpy (kJ/kg)	-6006	-4175	-2276	-1.586e+004
Mass Entropy (kJ/kg-C)	5.293	7.444	1.734	3.043
Heat Capacity (kJ/kgmole-C)	64.84	47.20	253.3	77.64
Mass Heat Capacity (kJ/kg-C)	2.569	2.207	2.010	4.307
LHV Molar Basis (Std) (Btu/SCF)	---	---	---	1.835e-004
LHV Mass Basis (Std) (kJ/kg)	---	---	---	8.987e-003
Phase Fraction [Vol. Basis]	0.7645	0.7645	0.1432	9.229e-002
Phase Fraction [Mass Basis]	0.5789	0.5789	0.2274	0.1937
Partial Pressure of CO2 (psig)	1.138	---	---	---
Cost Based on Flow (Cost/s)	0.0000	0.0000	0.0000	0.0000
Act. Gas Flow (ACT_m3/h)	188.2	188.2	---	---
Avg. Liq. Density (kgmole/m3)	18.84	16.84	5.992	55.35
Specific Heat (kJ/kgmole-C)	64.84	47.20	253.3	77.64
Std. Gas Flow (STD_m3/h)	9272	6336	422.3	2514
Std. Ideal Liq. Mass Density (kg/m3)	475.5	360.1	755.2	997.8
Act. Liq. Flow (barrel/day)	730.6	---	442.7	287.9
Z Factor	---	0.8944	0.2091	2.284e-002
Watson K	15.58	17.28	11.99	8.497
User Property	---	---	---	---
Partial Pressure of H2S (psig)	-14.70	---	---	---
Cp/(Cp - R)	1.147	1.214	1.034	1.120
Cp/Cv	1.164	1.389	1.034	1.149
Heat of Vap. (kJ/kgmole)	6.864e+004	---	---	---
Kinematic Viscosity (cSt)	---	0.3953	11.77	0.8027
Liq. Mass Density (Std. Cond) (kg/m3)	5.058	0.9080	781.4	1015
Liq. Vol. Flow (Std. Cond) (barrel/day)	2.954e+005	9.526e+005	434.8	285.1
Liquid Fraction	0.3167	0.0000	1.000	1.000
Molar Volume (m3/kgmole)	0.4922	0.7023	0.1642	1.793e-002
Mass Heat of Vap. (kJ/kg)	2720	---	---	---
Phase Fraction [Molar Basis]	0.6833	0.6833	0.0455	0.2712
Surface Tension (dyne/cm)	---	---	15.90	71.30
Thermal Conductivity (W/m-K)	---	3.307e-002	0.1005	0.6175
Viscosity (cP)	---	1.204e-002	9.037	0.8068
Cv (Semi-Ideal) (kJ/kgmole-C)	56.53	38.88	245.0	69.33
Mass Cv (Semi-Ideal) (kJ/kg-C)	2.240	1.818	1.944	3.846
Cv (kJ/kgmole-C)	55.70	33.97	245.0	67.55
Mass Cv (kJ/kg-C)	2.207	1.589	1.944	3.748
Cv (Ent. Method) (kJ/kgmole-C)	---	-3703	---	67.05
Mass Cv (Ent. Method) (kJ/kg-C)	---	-173.2	---	3.720
Cp/Cv (Ent. Method)	---	-1.275e-002	---	1.158
Reid VP at 37.8 C (psig)	3319	---	98.95	---
True VP at 37.8 C (psig)	6318	4184	480.8	17.45
Liq. Vol. Flow - Sum(Std. Cond) (barrel/day)	9.533e+005	9.526e+005	434.8	285.1
HHV Molar Basis (Std) (Btu/SCF)	---	---	---	46.45
HHV Mass Basis (Std) (kJ/kg)	---	---	---	2274
CO2 Loading	---	---	---	---
CO2 App ML Con (kgmole/m3)	---	---	8.249e-002	2.230e-002
CO2 App WT Con (kgmol/kg)	---	---	1.075e-004	2.219e-005
Phase Fraction [Act. Vol. Basis]	0.9749	0.9749	1.519e-002	9.880e-003
Mass Exergy (kJ/kg)	234.0	---	---	---
Viscosity Index	-12.15	---	---	---
Ideal Gas Cp/Cv	1.217	1.249	1.043	1.329
Ideal Gas Cp (kJ/kgmole-C)	46.72	41.73	199.6	33.60
Mass Ideal Gas Cp (kJ/kg-C)	1.851	1.951	1.584	1.864
Bubble Point Pressure (psig)	6241	---	---	---

* Specified by user.

Material Stream: Pandhi (continued)

Fluid Package: Basis-1
Property Package: Peng-Robinson

COMPOSITION

Overall Phase

Vapour Fraction 0.6833

COMPONENTS	MOLAR FLOW (kgmole/h)	MOLE FRACTION	MASS FLOW (tonne/d)	MASS FRACTION	LIQUID VOLUME FLOW (m3/h)	LIQUID VOLUME FRACTION
Methane	207.0440	0.5280	79.7181	0.3356	11.0944	0.5330
Ethane	28.8006	0.0734	20.7848	0.0875	2.4348	0.1170
Propane	15.2677	0.0389	16.1583	0.0680	1.3288	0.0638
i-Butane	2.0287	0.0052	2.8300	0.0119	0.2098	0.0101
n-Butane	3.9513	0.0101	5.5120	0.0232	0.3938	0.0189
i-Pentane	0.8495	0.0022	1.4710	0.0062	0.0983	0.0047
n-Pentane	0.9602	0.0024	1.6627	0.0070	0.1100	0.0053
n-Hexane	1.4698	0.0037	3.0399	0.0128	0.1911	0.0092
Nitrogen	5.5989	0.0143	3.7642	0.0158	0.1945	0.0093
CO2	9.4151	0.0240	9.9445	0.0419	0.5020	0.0241
H2S	0.0006	0.0000	0.0005	0.0000	0.0000	0.0000
H2O	106.6990	0.2721	46.1326	0.1942	1.9261	0.0925
NBP[1]95*	0.2883	0.0007	0.4699	0.0020	0.0288	0.0014
NBP[1]121*	0.3381	0.0009	0.5912	0.0025	0.0358	0.0017
NBP[1]147*	0.4314	0.0011	0.8304	0.0035	0.0494	0.0024
NBP[1]171*	0.8224	0.0021	1.7306	0.0073	0.1013	0.0049
NBP[1]195*	1.0758	0.0027	2.4160	0.0102	0.1398	0.0067
NBP[1]222*	0.8003	0.0020	1.9331	0.0081	0.1105	0.0053
NBP[1]248*	0.6657	0.0017	1.7287	0.0073	0.0976	0.0047
NBP[1]273*	0.5358	0.0014	1.4881	0.0063	0.0831	0.0040
NBP[1]299*	0.4185	0.0011	1.2393	0.0052	0.0684	0.0033
NBP[1]325*	0.3029	0.0008	0.9528	0.0040	0.0521	0.0025
NBP[1]351*	0.2456	0.0006	0.8214	0.0035	0.0445	0.0021
NBP[1]377*	0.2247	0.0006	0.8014	0.0034	0.0429	0.0021
NBP[1]402*	0.2061	0.0005	0.7838	0.0033	0.0416	0.0020
NBP[1]428*	0.1961	0.0005	0.7956	0.0033	0.0418	0.0020
NBP[1]454*	0.1956	0.0005	0.8480	0.0036	0.0441	0.0021
NBP[1]480*	0.1982	0.0005	0.9182	0.0039	0.0473	0.0023
NBP[1]505*	0.1920	0.0005	0.9484	0.0040	0.0484	0.0023
NBP[1]531*	0.1852	0.0005	0.9740	0.0041	0.0492	0.0024
NBP[1]557*	0.1784	0.0005	0.9978	0.0042	0.0500	0.0024
NBP[1]582*	0.1706	0.0004	1.0132	0.0043	0.0503	0.0024
NBP[1]608*	0.1643	0.0004	1.0351	0.0044	0.0510	0.0025
NBP[1]634*	0.1611	0.0004	1.0753	0.0045	0.0526	0.0025
NBP[1]659*	0.1586	0.0004	1.1194	0.0047	0.0543	0.0026
NBP[1]685*	0.1641	0.0004	1.2227	0.0051	0.0588	0.0028
NBP[1]711*	0.1715	0.0004	1.3445	0.0057	0.0642	0.0031
NBP[1]736*	0.1697	0.0004	1.3915	0.0059	0.0659	0.0032
NBP[1]762*	0.1653	0.0004	1.4214	0.0060	0.0669	0.0032
NBP[1]788*	0.1585	0.0004	1.4424	0.0061	0.0674	0.0032
NBP[1]825*	0.2655	0.0007	2.5963	0.0109	0.1201	0.0058
NBP[1]873*	0.1830	0.0005	1.9404	0.0082	0.0887	0.0043
NBP[1]926*	0.1437	0.0004	1.6472	0.0069	0.0744	0.0036
NBP[1]978*	0.1474	0.0004	1.8524	0.0078	0.0825	0.0040
NBP[1]1021*	0.0728	0.0002	0.9655	0.0041	0.0426	0.0020
NBP[1]1075*	0.0449	0.0001	0.6310	0.0027	0.0276	0.0013
NBP[1]1123*	0.0417	0.0001	0.6267	0.0026	0.0271	0.0013
NBP[1]1173*	0.0300	0.0001	0.4772	0.0020	0.0205	0.0010
NBP[1]1250*	0.0393	0.0001	0.6767	0.0028	0.0287	0.0014
NBP[1]1339*	0.0364	0.0001	0.6999	0.0029	0.0291	0.0014
NBP[1]1432*	0.0257	0.0001	0.5397	0.0023	0.0221	0.0011
NBP[1]1528*	0.0180	0.0000	0.4082	0.0017	0.0165	0.0008
NBP[1]1637*	0.0127	0.0000	0.3047	0.0013	0.0122	0.0006
NBP[1]1732*	0.0101	0.0000	0.2565	0.0011	0.0101	0.0005

* Specified by user.

Material Stream: Pandhi (continued)

Fluid Package: Basis-1
Property Package: Peng-Robinson

COMPOSITION

Overall Phase (continued)

Vapour Fraction 0.6833

COMPONENTS	MOLAR FLOW (kgmole/h)	MOLE FRACTION	MASS FLOW (tonne/d)	MASS FRACTION	LIQUID VOLUME FLOW (m3/h)	LIQUID VOLUME FRACTION
NBP[1]1819*	0.0097	0.0000	0.2590	0.0011	0.0101	0.0005
NBP[1]1913*	0.0112	0.0000	0.3148	0.0013	0.0121	0.0006
Total	392.1623	1.0000	237.5489	1.0000	20.8162	1.0000

Vapour Phase

Phase Fraction 0.6833

COMPONENTS	MOLAR FLOW (kgmole/h)	MOLE FRACTION	MASS FLOW (tonne/d)	MASS FRACTION	LIQUID VOLUME FLOW (m3/h)	LIQUID VOLUME FRACTION
Methane	204.9954	0.7650	78.9293	0.5739	10.9846	0.6902
Ethane	27.6428	0.1032	19.9492	0.1451	2.3370	0.1468
Propane	13.5786	0.0507	14.3706	0.1045	1.1818	0.0743
i-Butane	1.5846	0.0059	2.2105	0.0161	0.1639	0.0103
n-Butane	2.8799	0.0107	4.0174	0.0292	0.2870	0.0180
i-Pentane	0.4627	0.0017	0.8013	0.0058	0.0536	0.0034
n-Pentane	0.4645	0.0017	0.8044	0.0058	0.0532	0.0033
n-Hexane	0.3692	0.0014	0.7636	0.0056	0.0480	0.0030
Nitrogen	5.5749	0.0208	3.7480	0.0273	0.1937	0.0122
CO2	9.1306	0.0341	9.6441	0.0701	0.4869	0.0306
H2S	0.0005	0.0000	0.0004	0.0000	0.0000	0.0000
H2O	0.3934	0.0015	0.1701	0.0012	0.0071	0.0004
NBP[1]95*	0.1423	0.0005	0.2320	0.0017	0.0142	0.0009
NBP[1]121*	0.1317	0.0005	0.2302	0.0017	0.0139	0.0009
NBP[1]147*	0.1253	0.0005	0.2411	0.0018	0.0143	0.0009
NBP[1]171*	0.1732	0.0006	0.3645	0.0027	0.0213	0.0013
NBP[1]195*	0.1580	0.0006	0.3548	0.0026	0.0205	0.0013
NBP[1]222*	0.0733	0.0003	0.1771	0.0013	0.0101	0.0006
NBP[1]248*	0.0376	0.0001	0.0977	0.0007	0.0055	0.0003
NBP[1]273*	0.0182	0.0001	0.0505	0.0004	0.0028	0.0002
NBP[1]299*	0.0083	0.0000	0.0246	0.0002	0.0014	0.0001
NBP[1]325*	0.0034	0.0000	0.0106	0.0001	0.0006	0.0000
NBP[1]351*	0.0015	0.0000	0.0050	0.0000	0.0003	0.0000
NBP[1]377*	0.0007	0.0000	0.0026	0.0000	0.0001	0.0000
NBP[1]402*	0.0003	0.0000	0.0013	0.0000	0.0001	0.0000
NBP[1]428*	0.0002	0.0000	0.0007	0.0000	0.0000	0.0000
NBP[1]454*	0.0001	0.0000	0.0004	0.0000	0.0000	0.0000
NBP[1]480*	0.0000	0.0000	0.0002	0.0000	0.0000	0.0000
NBP[1]505*	0.0000	0.0000	0.0001	0.0000	0.0000	0.0000
NBP[1]531*	0.0000	0.0000	0.0000	0.0000	0.0000	0.0000
NBP[1]557*	0.0000	0.0000	0.0000	0.0000	0.0000	0.0000
NBP[1]582*	0.0000	0.0000	0.0000	0.0000	0.0000	0.0000
NBP[1]608*	0.0000	0.0000	0.0000	0.0000	0.0000	0.0000
NBP[1]634*	0.0000	0.0000	0.0000	0.0000	0.0000	0.0000
NBP[1]659*	0.0000	0.0000	0.0000	0.0000	0.0000	0.0000
NBP[1]685*	0.0000	0.0000	0.0000	0.0000	0.0000	0.0000
NBP[1]711*	0.0000	0.0000	0.0000	0.0000	0.0000	0.0000
NBP[1]736*	0.0000	0.0000	0.0000	0.0000	0.0000	0.0000
NBP[1]762*	0.0000	0.0000	0.0000	0.0000	0.0000	0.0000
NBP[1]788*	0.0000	0.0000	0.0000	0.0000	0.0000	0.0000
NBP[1]825*	0.0000	0.0000	0.0000	0.0000	0.0000	0.0000
NBP[1]873*	0.0000	0.0000	0.0000	0.0000	0.0000	0.0000
NBP[1]926*	0.0000	0.0000	0.0000	0.0000	0.0000	0.0000
NBP[1]978*	0.0000	0.0000	0.0000	0.0000	0.0000	0.0000
NBP[1]1021*	0.0000	0.0000	0.0000	0.0000	0.0000	0.0000
NBP[1]1075*	0.0000	0.0000	0.0000	0.0000	0.0000	0.0000
NBP[1]1123*	0.0000	0.0000	0.0000	0.0000	0.0000	0.0000

* Specified by user.

Material Stream: Pandhi (continued)

Fluid Package: Basis-1
Property Package: Peng-Robinson

COMPOSITION

Vapour Phase (continued)

Phase Fraction 0.6833

COMPONENTS	MOLAR FLOW (kgmole/h)	MOLE FRACTION	MASS FLOW (tonne/d)	MASS FRACTION	LIQUID VOLUME FLOW (m3/h)	LIQUID VOLUME FRACTION
NBP[1]1173*	0.0000	0.0000	0.0000	0.0000	0.0000	0.0000
NBP[1]1250*	0.0000	0.0000	0.0000	0.0000	0.0000	0.0000
NBP[1]1339*	0.0000	0.0000	0.0000	0.0000	0.0000	0.0000
NBP[1]1432*	0.0000	0.0000	0.0000	0.0000	0.0000	0.0000
NBP[1]1528*	0.0000	0.0000	0.0000	0.0000	0.0000	0.0000
NBP[1]1637*	0.0000	0.0000	0.0000	0.0000	0.0000	0.0000
NBP[1]1732*	0.0000	0.0000	0.0000	0.0000	0.0000	0.0000
NBP[1]1819*	0.0001	0.0000	0.0033	0.0000	0.0001	0.0000
NBP[1]1913*	0.0112	0.0000	0.3148	0.0023	0.0121	0.0008
Total	267.9625	1.0000	137.5201	1.0000	15.9142	1.0000

Liquid Phase

Phase Fraction 4.555e-002

COMPONENTS	MOLAR FLOW (kgmole/h)	MOLE FRACTION	MASS FLOW (tonne/d)	MASS FRACTION	LIQUID VOLUME FLOW (m3/h)	LIQUID VOLUME FRACTION
Methane	2.0486	0.1147	0.7888	0.0146	0.1098	0.0368
Ethane	1.1578	0.0648	0.8356	0.0155	0.0979	0.0328
Propane	1.6892	0.0946	1.7877	0.0331	0.1470	0.0493
i-Butane	0.4441	0.0249	0.6195	0.0115	0.0459	0.0154
n-Butane	1.0714	0.0600	1.4946	0.0277	0.1068	0.0358
i-Pentane	0.3868	0.0217	0.6697	0.0124	0.0448	0.0150
n-Pentane	0.4957	0.0278	0.8584	0.0159	0.0568	0.0191
n-Hexane	1.1006	0.0616	2.2764	0.0421	0.1431	0.0480
Nitrogen	0.0232	0.0013	0.0156	0.0003	0.0008	0.0003
CO2	0.2419	0.0135	0.2555	0.0047	0.0129	0.0043
H2S	0.0000	0.0000	0.0000	0.0000	0.0000	0.0000
H2O	0.0108	0.0006	0.0047	0.0001	0.0002	0.0001
NBP[1]95*	0.1460	0.0082	0.2380	0.0044	0.0146	0.0049
NBP[1]121*	0.2065	0.0116	0.3610	0.0067	0.0218	0.0073
NBP[1]147*	0.3062	0.0171	0.5893	0.0109	0.0350	0.0118
NBP[1]171*	0.6492	0.0363	1.3661	0.0253	0.0800	0.0268
NBP[1]195*	0.9178	0.0514	2.0612	0.0382	0.1193	0.0400
NBP[1]222*	0.7270	0.0407	1.7560	0.0325	0.1004	0.0337
NBP[1]248*	0.6280	0.0352	1.6311	0.0302	0.0921	0.0309
NBP[1]273*	0.5176	0.0290	1.4376	0.0266	0.0803	0.0269
NBP[1]299*	0.4102	0.0230	1.2147	0.0225	0.0671	0.0225
NBP[1]325*	0.2995	0.0168	0.9422	0.0174	0.0515	0.0173
NBP[1]351*	0.2441	0.0137	0.8164	0.0151	0.0442	0.0148
NBP[1]377*	0.2240	0.0125	0.7988	0.0148	0.0428	0.0144
NBP[1]402*	0.2058	0.0115	0.7825	0.0145	0.0415	0.0139
NBP[1]428*	0.1959	0.0110	0.7949	0.0147	0.0417	0.0140
NBP[1]454*	0.1955	0.0109	0.8477	0.0157	0.0441	0.0148
NBP[1]480*	0.1981	0.0111	0.9180	0.0170	0.0473	0.0159
NBP[1]505*	0.1920	0.0107	0.9483	0.0176	0.0484	0.0162
NBP[1]531*	0.1852	0.0104	0.9740	0.0180	0.0492	0.0165
NBP[1]557*	0.1784	0.0100	0.9978	0.0185	0.0500	0.0168
NBP[1]582*	0.1706	0.0095	1.0132	0.0188	0.0503	0.0169
NBP[1]608*	0.1643	0.0092	1.0351	0.0192	0.0510	0.0171
NBP[1]634*	0.1611	0.0090	1.0753	0.0199	0.0526	0.0176
NBP[1]659*	0.1586	0.0089	1.1194	0.0207	0.0543	0.0182
NBP[1]685*	0.1641	0.0092	1.2227	0.0226	0.0588	0.0197
NBP[1]711*	0.1715	0.0096	1.3445	0.0249	0.0642	0.0215
NBP[1]736*	0.1697	0.0095	1.3915	0.0258	0.0659	0.0221
NBP[1]762*	0.1653	0.0093	1.4214	0.0263	0.0669	0.0224
NBP[1]788*	0.1585	0.0089	1.4424	0.0267	0.0674	0.0226

* Specified by user.

Material Stream: Pandhi (continued)

Fluid Package: Basis-1
Property Package: Peng-Robinson

COMPOSITION

Liquid Phase (continued)

Phase Fraction 4.555e-002

COMPONENTS	MOLAR FLOW (kgmole/h)	MOLE FRACTION	MASS FLOW (tonne/d)	MASS FRACTION	LIQUID VOLUME FLOW (m3/h)	LIQUID VOLUME FRACTION
NBP[1]825*	0.2655	0.0149	2.5963	0.0481	0.1201	0.0403
NBP[1]873*	0.1830	0.0102	1.9404	0.0359	0.0887	0.0298
NBP[1]926*	0.1437	0.0080	1.6472	0.0305	0.0744	0.0250
NBP[1]978*	0.1474	0.0082	1.8524	0.0343	0.0825	0.0277
NBP[1]1021*	0.0728	0.0041	0.9655	0.0179	0.0426	0.0143
NBP[1]1075*	0.0449	0.0025	0.6310	0.0117	0.0276	0.0093
NBP[1]1123*	0.0417	0.0023	0.6267	0.0116	0.0271	0.0091
NBP[1]1173*	0.0300	0.0017	0.4772	0.0088	0.0205	0.0069
NBP[1]1250*	0.0393	0.0022	0.6767	0.0125	0.0287	0.0096
NBP[1]1339*	0.0364	0.0020	0.6999	0.0130	0.0291	0.0098
NBP[1]1432*	0.0257	0.0014	0.5397	0.0100	0.0221	0.0074
NBP[1]1528*	0.0180	0.0010	0.4082	0.0076	0.0165	0.0055
NBP[1]1637*	0.0127	0.0007	0.3047	0.0056	0.0122	0.0041
NBP[1]1732*	0.0101	0.0006	0.2565	0.0047	0.0101	0.0034
NBP[1]1819*	0.0096	0.0005	0.2557	0.0047	0.0100	0.0033
NBP[1]1913*	0.0000	0.0000	0.0000	0.0000	0.0000	0.0000
Total	17.8617	1.0000	54.0255	1.0000	2.9809	1.0000

Aqueous Phase

Phase Fraction 0.2712

COMPONENTS	MOLAR FLOW (kgmole/h)	MOLE FRACTION	MASS FLOW (tonne/d)	MASS FRACTION	LIQUID VOLUME FLOW (m3/h)	LIQUID VOLUME FRACTION
Methane	0.0000	0.0000	0.0000	0.0000	0.0000	0.0000
Ethane	0.0000	0.0000	0.0000	0.0000	0.0000	0.0000
Propane	0.0000	0.0000	0.0000	0.0000	0.0000	0.0000
i-Butane	0.0000	0.0000	0.0000	0.0000	0.0000	0.0000
n-Butane	0.0000	0.0000	0.0000	0.0000	0.0000	0.0000
i-Pentane	0.0000	0.0000	0.0000	0.0000	0.0000	0.0000
n-Pentane	0.0000	0.0000	0.0000	0.0000	0.0000	0.0000
n-Hexane	0.0000	0.0000	0.0000	0.0000	0.0000	0.0000
Nitrogen	0.0008	0.0000	0.0006	0.0000	0.0000	0.0000
CO2	0.0425	0.0004	0.0449	0.0010	0.0023	0.0012
H2S	0.0000	0.0000	0.0000	0.0000	0.0000	0.0000
H2O	106.2948	0.9996	45.9579	0.9990	1.9188	0.9988
NBP[1]95*	0.0000	0.0000	0.0000	0.0000	0.0000	0.0000
NBP[1]121*	0.0000	0.0000	0.0000	0.0000	0.0000	0.0000
NBP[1]147*	0.0000	0.0000	0.0000	0.0000	0.0000	0.0000
NBP[1]171*	0.0000	0.0000	0.0000	0.0000	0.0000	0.0000
NBP[1]195*	0.0000	0.0000	0.0000	0.0000	0.0000	0.0000
NBP[1]222*	0.0000	0.0000	0.0000	0.0000	0.0000	0.0000
NBP[1]248*	0.0000	0.0000	0.0000	0.0000	0.0000	0.0000
NBP[1]273*	0.0000	0.0000	0.0000	0.0000	0.0000	0.0000
NBP[1]299*	0.0000	0.0000	0.0000	0.0000	0.0000	0.0000
NBP[1]325*	0.0000	0.0000	0.0000	0.0000	0.0000	0.0000
NBP[1]351*	0.0000	0.0000	0.0000	0.0000	0.0000	0.0000
NBP[1]377*	0.0000	0.0000	0.0000	0.0000	0.0000	0.0000
NBP[1]402*	0.0000	0.0000	0.0000	0.0000	0.0000	0.0000
NBP[1]428*	0.0000	0.0000	0.0000	0.0000	0.0000	0.0000
NBP[1]454*	0.0000	0.0000	0.0000	0.0000	0.0000	0.0000
NBP[1]480*	0.0000	0.0000	0.0000	0.0000	0.0000	0.0000
NBP[1]505*	0.0000	0.0000	0.0000	0.0000	0.0000	0.0000
NBP[1]531*	0.0000	0.0000	0.0000	0.0000	0.0000	0.0000
NBP[1]557*	0.0000	0.0000	0.0000	0.0000	0.0000	0.0000
NBP[1]582*	0.0000	0.0000	0.0000	0.0000	0.0000	0.0000
NBP[1]608*	0.0000	0.0000	0.0000	0.0000	0.0000	0.0000

* Specified by user.

Material Stream: Pandhi (continued)

Fluid Package: Basis-1
Property Package: Peng-Robinson

COMPOSITION

Aqueous Phase (continued)

Phase Fraction 0.2712

COMPONENTS	MOLAR FLOW (kgmole/h)	MOLE FRACTION	MASS FLOW (tonne/d)	MASS FRACTION	LIQUID VOLUME FLOW (m3/h)	LIQUID VOLUME FRACTION
NBP[1]634*	0.0000	0.0000	0.0000	0.0000	0.0000	0.0000
NBP[1]659*	0.0000	0.0000	0.0000	0.0000	0.0000	0.0000
NBP[1]685*	0.0000	0.0000	0.0000	0.0000	0.0000	0.0000
NBP[1]711*	0.0000	0.0000	0.0000	0.0000	0.0000	0.0000
NBP[1]736*	0.0000	0.0000	0.0000	0.0000	0.0000	0.0000
NBP[1]762*	0.0000	0.0000	0.0000	0.0000	0.0000	0.0000
NBP[1]788*	0.0000	0.0000	0.0000	0.0000	0.0000	0.0000
NBP[1]825*	0.0000	0.0000	0.0000	0.0000	0.0000	0.0000
NBP[1]873*	0.0000	0.0000	0.0000	0.0000	0.0000	0.0000
NBP[1]926*	0.0000	0.0000	0.0000	0.0000	0.0000	0.0000
NBP[1]978*	0.0000	0.0000	0.0000	0.0000	0.0000	0.0000
NBP[1]1021*	0.0000	0.0000	0.0000	0.0000	0.0000	0.0000
NBP[1]1075*	0.0000	0.0000	0.0000	0.0000	0.0000	0.0000
NBP[1]1123*	0.0000	0.0000	0.0000	0.0000	0.0000	0.0000
NBP[1]1173*	0.0000	0.0000	0.0000	0.0000	0.0000	0.0000
NBP[1]1250*	0.0000	0.0000	0.0000	0.0000	0.0000	0.0000
NBP[1]1339*	0.0000	0.0000	0.0000	0.0000	0.0000	0.0000
NBP[1]1432*	0.0000	0.0000	0.0000	0.0000	0.0000	0.0000
NBP[1]1528*	0.0000	0.0000	0.0000	0.0000	0.0000	0.0000
NBP[1]1637*	0.0000	0.0000	0.0000	0.0000	0.0000	0.0000
NBP[1]1732*	0.0000	0.0000	0.0000	0.0000	0.0000	0.0000
NBP[1]1819*	0.0000	0.0000	0.0000	0.0000	0.0000	0.0000
NBP[1]1913*	0.0000	0.0000	0.0000	0.0000	0.0000	0.0000
Total	106.3381	1.0000	46.0033	1.0000	1.9211	1.0000

Material Stream: PANDHI oil

Fluid Package: Basis-1
Property Package: Peng-Robinson

CONDITIONS

		Overall
Vapour / Phase Fraction		---
Temperature:	(F)	---
Pressure:	(psig)	450.0 *
Molar Flow	(MMSCFD)	0.1957
Mass Flow	(tonne/d)	45.85
Std Ideal Liq Vol Flow	(barrel/day)	346.1
Molar Enthalpy	(kJ/kgmole)	---
Molar Entropy	(kJ/kgmole-C)	---
Heat Flow	(MMBtu/hr)	---
Liq Vol Flow @Std Cond	(barrel/day)	346.1 *

PROPERTIES

		Overall
Molecular Weight		196.0
Molar Density	(kgmole/m3)	---
Mass Density	(kg/m3)	---
Act. Volume Flow	(barrel/day)	---
Mass Enthalpy	(kJ/kg)	---
Mass Entropy	(kJ/kg-C)	---
Heat Capacity	(kJ/kgmole-C)	---
Mass Heat Capacity	(kJ/kg-C)	---
LHV Molar Basis (Std)	(Btu/SCF)	---
LHV Mass Basis (Std)	(kJ/kg)	---
Phase Fraction [Vol. Basis]		0.0000

Licensed to: PETROCHEMICAL ENGINEERIN
* Specified by user.

Material Stream: PANDHI oil (continued)

Fluid Package: Basis-1
Property Package: Peng-Robinson

PROPERTIES

	Overall				
Phase Fraction [Mass Basis]	0.0000				
Partial Pressure of CO2 (psig)	-14.70				
Cost Based on Flow (Cost/s)	0.0000				
Act. Gas Flow (ACT_m3/h)	---				
Avg. Liq. Density (kgmole/m3)	4.251				
Specific Heat (kJ/kgmole-C)	---				
Std. Gas Flow (STD_m3/h)	230.4				
Std. Ideal Liq. Mass Density (kg/m3)	833.3				
Act. Liq. Flow (barrel/day)	---				
Z Factor	---				
Watson K	11.77				
User Property	---				
Partial Pressure of H2S (psig)	-14.70				
Cp/(Cp - R)	---				
Cp/Cv	---				
Heat of Vap. (kJ/kgmole)	---				
Kinematic Viscosity (cSt)	---				
Liq. Mass Density (Std. Cond) (kg/m3)	833.3				
Liq. Vol. Flow (Std. Cond) (barrel/day)	346.1				
Liquid Fraction	---				
Molar Volume (m3/kgmole)	---				
Mass Heat of Vap. (kJ/kg)	---				
Phase Fraction [Molar Basis]	---				
Surface Tension (dyne/cm)	---				
Thermal Conductivity (W/m-K)	---				
Viscosity (cP)	---				
Cv (Semi-Ideal) (kJ/kgmole-C)	---				
Mass Cv (Semi-Ideal) (kJ/kg-C)	---				
Cv (kJ/kgmole-C)	---				
Mass Cv (kJ/kg-C)	---				
Cv (Ent. Method) (kJ/kgmole-C)	---				
Mass Cv (Ent. Method) (kJ/kg-C)	---				
Cp/Cv (Ent. Method)	---				
Reid VP at 37.8 C (psig)	---				
True VP at 37.8 C (psig)	---				
Liq. Vol. Flow - Sum(Std. Cond) (barrel/day)	0.0000				
HHV Molar Basis (Std) (Btu/SCF)	---				
HHV Mass Basis (Std) (kJ/kg)	---				
CO2 Loading	---				
CO2 App ML Con (kgmole/m3)	---				
CO2 App WT Con (kgmol/kg)	0.0000				
Phase Fraction [Act. Vol. Basis]	0.0000				
Mass Exergy (kJ/kg)	9.739e+006				
Viscosity Index	---				
Ideal Gas Cp/Cv	1.000				
Ideal Gas Cp (kJ/kgmole-C)	-5.304e+005				
Mass Ideal Gas Cp (kJ/kg-C)	-2706				
Bubble Point Pressure (psig)	---				

COMPOSITION

Overall Phase

Vapour Fraction ---

COMPONENTS	MOLAR FLOW (kgmole/h)	MOLE FRACTION	MASS FLOW (tonne/d)	MASS FRACTION	LIQUID VOLUME FLOW (m3/h)	LIQUID VOLUME FRACTION
Methane	0.0000 *	0.0000 *	0.0000 *	0.0000 *	0.0000 *	0.0000 *
Ethane	0.0000 *	0.0000 *	0.0000 *	0.0000 *	0.0000 *	0.0000 *
Propane	0.0000 *	0.0000 *	0.0000 *	0.0000 *	0.0000 *	0.0000 *

Licensed to: PETROCHEMICAL ENGINEERIN
* Specified by user.

Material Stream: PANDHI oil (continued)

Fluid Package: Basis-1
Property Package: Peng-Robinson

COMPOSITION

Overall Phase (continued)

Vapour Fraction ---

COMPONENTS	MOLAR FLOW (kgmole/h)	MOLE FRACTION	MASS FLOW (tonne/d)	MASS FRACTION	LIQUID VOLUME FLOW (m3/h)	LIQUID VOLUME FRACTION
i-Butane	0.0000 *	0.0000 *	0.0000 *	0.0000 *	0.0000 *	0.0000 *
n-Butane	0.0000 *	0.0000 *	0.0000 *	0.0000 *	0.0000 *	0.0000 *
i-Pentane	0.0000 *	0.0000 *	0.0000 *	0.0000 *	0.0000 *	0.0000 *
n-Pentane	0.0000 *	0.0000 *	0.0000 *	0.0000 *	0.0000 *	0.0000 *
n-Hexane	0.0000 *	0.0000 *	0.0000 *	0.0000 *	0.0000 *	0.0000 *
Nitrogen	0.0000 *	0.0000 *	0.0000 *	0.0000 *	0.0000 *	0.0000 *
CO2	0.0000 *	0.0000 *	0.0000 *	0.0000 *	0.0000 *	0.0000 *
H2S	0.0000 *	0.0000 *	0.0000 *	0.0000 *	0.0000 *	0.0000 *
H2O	0.0000 *	0.0000 *	0.0000 *	0.0000 *	0.0000 *	0.0000 *
NBP[1]95*	0.2390 *	0.0245 *	0.3897 *	0.0085 *	0.0239 *	0.0104 *
NBP[1]121*	0.2888 *	0.0296 *	0.5049 *	0.0110 *	0.0305 *	0.0133 *
NBP[1]147*	0.3822 *	0.0392 *	0.7356 *	0.0160 *	0.0437 *	0.0191 *
NBP[1]171*	0.7533 *	0.0773 *	1.5851 *	0.0346 *	0.0928 *	0.0405 *
NBP[1]195*	1.0134 *	0.1040 *	2.2759 *	0.0496 *	0.1317 *	0.0574 *
NBP[1]222*	0.7725 *	0.0793 *	1.8658 *	0.0407 *	0.1066 *	0.0465 *
NBP[1]248*	0.6522 *	0.0669 *	1.6937 *	0.0369 *	0.0956 *	0.0417 *
NBP[1]273*	0.5297 *	0.0544 *	1.4712 *	0.0321 *	0.0821 *	0.0358 *
NBP[1]299*	0.4159 *	0.0427 *	1.2317 *	0.0269 *	0.0680 *	0.0297 *
NBP[1]325*	0.3019 *	0.0310 *	0.9498 *	0.0207 *	0.0519 *	0.0227 *
NBP[1]351*	0.2452 *	0.0252 *	0.8201 *	0.0179 *	0.0444 *	0.0194 *
NBP[1]377*	0.2246 *	0.0230 *	0.8008 *	0.0175 *	0.0429 *	0.0187 *
NBP[1]402*	0.2060 *	0.0211 *	0.7836 *	0.0171 *	0.0416 *	0.0181 *
NBP[1]428*	0.1960 *	0.0201 *	0.7954 *	0.0173 *	0.0418 *	0.0182 *
NBP[1]454*	0.1956 *	0.0201 *	0.8479 *	0.0185 *	0.0441 *	0.0192 *
NBP[1]480*	0.1982 *	0.0203 *	0.9181 *	0.0200 *	0.0473 *	0.0206 *
NBP[1]505*	0.1920 *	0.0197 *	0.9484 *	0.0207 *	0.0484 *	0.0211 *
NBP[1]531*	0.1852 *	0.0190 *	0.9740 *	0.0212 *	0.0492 *	0.0215 *
NBP[1]557*	0.1784 *	0.0183 *	0.9978 *	0.0218 *	0.0500 *	0.0218 *
NBP[1]582*	0.1706 *	0.0175 *	1.0132 *	0.0221 *	0.0503 *	0.0220 *
NBP[1]608*	0.1643 *	0.0169 *	1.0351 *	0.0226 *	0.0510 *	0.0222 *
NBP[1]634*	0.1611 *	0.0165 *	1.0753 *	0.0235 *	0.0526 *	0.0229 *
NBP[1]659*	0.1586 *	0.0163 *	1.1194 *	0.0244 *	0.0543 *	0.0237 *
NBP[1]685*	0.1641 *	0.0168 *	1.2227 *	0.0267 *	0.0588 *	0.0257 *
NBP[1]711*	0.1715 *	0.0176 *	1.3445 *	0.0293 *	0.0642 *	0.0280 *
NBP[1]736*	0.1697 *	0.0174 *	1.3915 *	0.0303 *	0.0659 *	0.0288 *
NBP[1]762*	0.1653 *	0.0170 *	1.4214 *	0.0310 *	0.0669 *	0.0292 *
NBP[1]788*	0.1585 *	0.0163 *	1.4424 *	0.0315 *	0.0674 *	0.0294 *
NBP[1]825*	0.2655 *	0.0272 *	2.5963 *	0.0566 *	0.1201 *	0.0524 *
NBP[1]873*	0.1830 *	0.0188 *	1.9404 *	0.0423 *	0.0887 *	0.0387 *
NBP[1]926*	0.1437 *	0.0147 *	1.6472 *	0.0359 *	0.0744 *	0.0325 *
NBP[1]978*	0.1474 *	0.0151 *	1.8524 *	0.0404 *	0.0825 *	0.0360 *
NBP[1]1021*	0.0728 *	0.0075 *	0.9655 *	0.0211 *	0.0426 *	0.0186 *
NBP[1]1075*	0.0449 *	0.0046 *	0.6310 *	0.0138 *	0.0276 *	0.0120 *
NBP[1]1123*	0.0417 *	0.0043 *	0.6267 *	0.0137 *	0.0271 *	0.0118 *
NBP[1]1173*	0.0300 *	0.0031 *	0.4772 *	0.0104 *	0.0205 *	0.0089 *
NBP[1]1250*	0.0393 *	0.0040 *	0.6767 *	0.0148 *	0.0287 *	0.0125 *
NBP[1]1339*	0.0364 *	0.0037 *	0.6999 *	0.0153 *	0.0291 *	0.0127 *
NBP[1]1432*	0.0257 *	0.0026 *	0.5397 *	0.0118 *	0.0221 *	0.0097 *
NBP[1]1528*	0.0180 *	0.0018 *	0.4082 *	0.0089 *	0.0165 *	0.0072 *
NBP[1]1637*	0.0127 *	0.0013 *	0.3047 *	0.0066 *	0.0122 *	0.0053 *
NBP[1]1732*	0.0101 *	0.0010 *	0.2565 *	0.0056 *	0.0101 *	0.0044 *
NBP[1]1819*	0.0097 *	0.0010 *	0.2590 *	0.0056 *	0.0101 *	0.0044 *
NBP[1]1913*	0.0112 *	0.0011 *	0.3148 *	0.0069 *	0.0121 *	0.0053 *
Total	9.7460	1.0000	45.8513	1.0000	2.2926	1.0000

Licensed to: PETROCHEMICAL ENGINEERIN
* Specified by user.

Material Stream: Pandhi-C

Fluid Package: Basis-1
Property Package: Peng-Robinson

CONDITIONS

	Overall	Vapour Phase	Liquid Phase	Aqueous Phase
Vapour / Phase Fraction	0.0000	0.0000	1.0000	0.0000
Temperature: (F)	84.79	84.79	84.79	84.79
Pressure: (psig)	445.0	445.0	445.0	445.0
Molar Flow (MMSCFD)	0.3574	0.0000	0.3574	0.0000
Mass Flow (tonne/d)	53.98	0.0000	53.98	0.0000
Std Ideal Liq Vol Flow (barrel/day)	449.3	0.0000	449.3	0.0000
Molar Enthalpy (kJ/kgmole)	-2.875e+005	-8.928e+004	-2.875e+005	-2.859e+005
Molar Entropy (kJ/kgmole-C)	218.7	159.3	218.7	54.83
Heat Flow (MMBtu/hr)	-4.850	0.0000	-4.850	0.0000
Liq Vol Flow @Std Cond (barrel/day)	434.3 *	0.0000	434.3	0.0000

PROPERTIES

	Overall	Vapour Phase	Liquid Phase	Aqueous Phase
Molecular Weight	126.4	21.39	126.4	18.03
Molar Density (kgmole/m3)	6.079	1.408	6.079	55.76
Mass Density (kg/m3)	768.1	30.10	768.1	1005
Act. Volume Flow (barrel/day)	442.0	0.0000	442.0	0.0000
Mass Enthalpy (kJ/kg)	-2275	-4175	-2275	-1.586e+004
Mass Entropy (kJ/kg-C)	1.731	7.448	1.731	3.042
Heat Capacity (kJ/kgmole-C)	253.8	47.13	253.8	77.64
Mass Heat Capacity (kJ/kg-C)	2.009	2.204	2.009	4.307
LHV Molar Basis (Std) (Btu/SCF)	---	---	---	1.809e-004
LHV Mass Basis (Std) (kJ/kg)	---	---	---	8.858e-003
Phase Fraction [Vol. Basis]	---	---	1.000	---
Phase Fraction [Mass Basis]	0.0000	0.0000	1.000	0.0000
Partial Pressure of CO2 (psig)	-14.70	---	---	---
Cost Based on Flow (Cost/s)	0.0000	0.0000	0.0000	0.0000
Act. Gas Flow (ACT_m3/h)	---	---	---	---
Avg. Liq. Density (kgmole/m3)	5.980	16.84	5.980	55.35
Specific Heat (kJ/kgmole-C)	253.8	47.13	253.8	77.64
Std. Gas Flow (STD_m3/h)	420.9	0.0000	420.9	0.0000
Std. Ideal Liq. Mass Density (kg/m3)	755.6	360.1	755.6	997.8
Act. Liq. Flow (barrel/day)	442.0	---	442.0	0.0000
Z Factor	---	0.8953	0.2073	2.260e-002
Watson K	11.99	17.28	11.99	8.497
User Property	---	---	---	---
Partial Pressure of H2S (psig)	-14.70	---	---	---
Cp/(Cp - R)	1.034	1.214	1.034	1.120
Cp/Cv	1.034	1.388	1.034	1.149
Heat of Vap. (kJ/kgmole)	2.556e+005	---	---	---
Kinematic Viscosity (cSt)	12.25	0.3993	12.25	0.8047
Liq. Mass Density (Std. Cond) (kg/m3)	781.8	0.9081	781.8	1015
Liq. Vol. Flow (Std. Cond) (barrel/day)	434.3	0.0000	434.3	0.0000
Liquid Fraction	1.000	0.0000	1.000	1.000
Molar Volume (m3/kgmole)	0.1645	0.7104	0.1645	1.793e-002
Mass Heat of Vap. (kJ/kg)	2023	---	---	---
Phase Fraction [Molar Basis]	0.0000	0.0000	1.0000	0.0000
Surface Tension (dyne/cm)	15.96	---	15.96	71.32
Thermal Conductivity (W/m-K)	0.1006	3.302e-002	0.1006	0.6173
Viscosity (cP)	9.409	1.202e-002	9.409	0.8089
Cv (Semi-Ideal) (kJ/kgmole-C)	245.5	38.81	245.5	69.33
Mass Cv (Semi-Ideal) (kJ/kg-C)	1.943	1.815	1.943	3.846
Cv (kJ/kgmole-C)	245.5	33.96	245.5	67.56
Mass Cv (kJ/kg-C)	1.943	1.588	1.943	3.748
Cv (Ent. Method) (kJ/kgmole-C)	---	-3697	---	66.88
Mass Cv (Ent. Method) (kJ/kg-C)	---	-172.9	---	3.711
Cp/Cv (Ent. Method)	---	-1.275e-002	---	1.161

* Specified by user.

Material Stream: Pandhi-C (continued)

Fluid Package: Basis-1
Property Package: Peng-Robinson

PROPERTIES

	Overall	Vapour Phase	Liquid Phase	Aqueous Phase
Reid VP at 37.8 C (psig)	97.87	---	97.87	---
True VP at 37.8 C (psig)	475.9	3607	475.9	17.11
Liq. Vol. Flow - Sum(Std. Cond) (barrel/day)	434.3	0.0000	434.3	0.0000
HHV Molar Basis (Std) (Btu/SCF)	---	---	---	46.45
HHV Mass Basis (Std) (kJ/kg)	---	---	---	2274
CO2 Loading	---	---	---	---
CO2 App ML Con (kgmole/m3)	8.172e-002	---	8.172e-002	---
CO2 App WT Con (kgmol/kg)	1.064e-004	---	1.064e-004	---
Phase Fraction [Act. Vol. Basis]	0.0000	0.0000	1.000	0.0000
Mass Exergy (kJ/kg)	19.83	---	---	---
Viscosity Index	24.69	---	---	---
Ideal Gas Cp/Cv	1.043	1.249	1.043	1.329
Ideal Gas Cp (kJ/kgmole-C)	200.0	41.72	200.0	33.60
Mass Ideal Gas Cp (kJ/kg-C)	1.583	1.951	1.583	1.864
Bubble Point Pressure (psig)	445.0	---	---	---

COMPOSITION

Overall Phase

Vapour Fraction 0.0000

COMPONENTS	MOLAR FLOW (kgmole/h)	MOLE FRACTION	MASS FLOW (tonne/d)	MASS FRACTION	LIQUID VOLUME FLOW (m3/h)	LIQUID VOLUME FRACTION
Methane	2.0221	0.1136	0.7786	0.0144	0.1084	0.0364
Ethane	1.1465	0.0644	0.8274	0.0153	0.0969	0.0326
Propane	1.6775	0.0942	1.7753	0.0329	0.1460	0.0490
i-Butane	0.4420	0.0248	0.6166	0.0114	0.0457	0.0154
n-Butane	1.0672	0.0600	1.4887	0.0276	0.1064	0.0357
i-Pentane	0.3860	0.0217	0.6684	0.0124	0.0447	0.0150
n-Pentane	0.4950	0.0278	0.8571	0.0159	0.0567	0.0191
n-Hexane	1.1004	0.0618	2.2760	0.0422	0.1431	0.0481
Nitrogen	0.0228	0.0013	0.0153	0.0003	0.0008	0.0003
CO2	0.2393	0.0134	0.2527	0.0047	0.0128	0.0043
H2S	0.0000	0.0000	0.0000	0.0000	0.0000	0.0000
H2O	0.0107	0.0006	0.0046	0.0001	0.0002	0.0001
NBP[1]95*	0.1457	0.0082	0.2376	0.0044	0.0146	0.0049
NBP[1]121*	0.2063	0.0116	0.3606	0.0067	0.0218	0.0073
NBP[1]147*	0.3061	0.0172	0.5891	0.0109	0.0350	0.0118
NBP[1]171*	0.6492	0.0365	1.3660	0.0253	0.0800	0.0269
NBP[1]195*	0.9179	0.0516	2.0614	0.0382	0.1193	0.0401
NBP[1]222*	0.7271	0.0408	1.7563	0.0325	0.1004	0.0337
NBP[1]248*	0.6282	0.0353	1.6313	0.0302	0.0921	0.0309
NBP[1]273*	0.5177	0.0291	1.4378	0.0266	0.0803	0.0270
NBP[1]299*	0.4103	0.0230	1.2148	0.0225	0.0671	0.0225
NBP[1]325*	0.2995	0.0168	0.9422	0.0175	0.0515	0.0173
NBP[1]351*	0.2442	0.0137	0.8165	0.0151	0.0442	0.0148
NBP[1]377*	0.2240	0.0126	0.7989	0.0148	0.0428	0.0144
NBP[1]402*	0.2058	0.0116	0.7826	0.0145	0.0415	0.0139
NBP[1]428*	0.1959	0.0110	0.7949	0.0147	0.0417	0.0140
NBP[1]454*	0.1955	0.0110	0.8477	0.0157	0.0441	0.0148
NBP[1]480*	0.1981	0.0111	0.9180	0.0170	0.0473	0.0159
NBP[1]505*	0.1920	0.0108	0.9483	0.0176	0.0484	0.0162
NBP[1]531*	0.1852	0.0104	0.9740	0.0180	0.0492	0.0165
NBP[1]557*	0.1784	0.0100	0.9978	0.0185	0.0500	0.0168
NBP[1]582*	0.1706	0.0096	1.0132	0.0188	0.0503	0.0169
NBP[1]608*	0.1643	0.0092	1.0351	0.0192	0.0510	0.0171
NBP[1]634*	0.1611	0.0090	1.0753	0.0199	0.0526	0.0177
NBP[1]659*	0.1586	0.0089	1.1194	0.0207	0.0543	0.0182
NBP[1]685*	0.1641	0.0092	1.2227	0.0227	0.0588	0.0198

* Specified by user.

Material Stream: Pandhi-C (continued)

Fluid Package: Basis-1
Property Package: Peng-Robinson

COMPOSITION

Overall Phase (continued)

Vapour Fraction 0.0000

COMPONENTS	MOLAR FLOW (kgmole/h)	MOLE FRACTION	MASS FLOW (tonne/d)	MASS FRACTION	LIQUID VOLUME FLOW (m3/h)	LIQUID VOLUME FRACTION
NBP[1]711*	0.1715	0.0096	1.3445	0.0249	0.0642	0.0216
NBP[1]736*	0.1697	0.0095	1.3915	0.0258	0.0659	0.0221
NBP[1]762*	0.1653	0.0093	1.4214	0.0263	0.0669	0.0225
NBP[1]788*	0.1585	0.0089	1.4424	0.0267	0.0674	0.0226
NBP[1]825*	0.2655	0.0149	2.5963	0.0481	0.1201	0.0404
NBP[1]873*	0.1830	0.0103	1.9404	0.0359	0.0887	0.0298
NBP[1]926*	0.1437	0.0081	1.6472	0.0305	0.0744	0.0250
NBP[1]978*	0.1474	0.0083	1.8524	0.0343	0.0825	0.0277
NBP[1]1021*	0.0728	0.0041	0.9655	0.0179	0.0426	0.0143
NBP[1]1075*	0.0449	0.0025	0.6310	0.0117	0.0276	0.0093
NBP[1]1123*	0.0417	0.0023	0.6267	0.0116	0.0271	0.0091
NBP[1]1173*	0.0300	0.0017	0.4772	0.0088	0.0205	0.0069
NBP[1]1250*	0.0393	0.0022	0.6767	0.0125	0.0287	0.0096
NBP[1]1339*	0.0364	0.0020	0.6999	0.0130	0.0291	0.0098
NBP[1]1432*	0.0257	0.0014	0.5397	0.0100	0.0221	0.0074
NBP[1]1528*	0.0180	0.0010	0.4082	0.0076	0.0165	0.0055
NBP[1]1637*	0.0127	0.0007	0.3047	0.0056	0.0122	0.0041
NBP[1]1732*	0.0101	0.0006	0.2565	0.0048	0.0101	0.0034
NBP[1]1819*	0.0096	0.0005	0.2561	0.0047	0.0100	0.0034
NBP[1]1913*	0.0000	0.0000	0.0000	0.0000	0.0000	0.0000
Total	17.8012	1.0000	53.9808	1.0000	2.9766	1.0000

Vapour Phase

Phase Fraction 0.0000

COMPONENTS	MOLAR FLOW (kgmole/h)	MOLE FRACTION	MASS FLOW (tonne/d)	MASS FRACTION	LIQUID VOLUME FLOW (m3/h)	LIQUID VOLUME FRACTION
Methane	0.0000	0.7649	0.0000	0.5738	0.0000	0.6901
Ethane	0.0000	0.1032	0.0000	0.1451	0.0000	0.1469
Propane	0.0000	0.0507	0.0000	0.1046	0.0000	0.0743
i-Butane	0.0000	0.0059	0.0000	0.0161	0.0000	0.0103
n-Butane	0.0000	0.0108	0.0000	0.0292	0.0000	0.0181
i-Pentane	0.0000	0.0017	0.0000	0.0058	0.0000	0.0034
n-Pentane	0.0000	0.0017	0.0000	0.0059	0.0000	0.0033
n-Hexane	0.0000	0.0014	0.0000	0.0056	0.0000	0.0030
Nitrogen	0.0000	0.0208	0.0000	0.0272	0.0000	0.0122
CO2	0.0000	0.0341	0.0000	0.0701	0.0000	0.0306
H2S	0.0000	0.0000	0.0000	0.0000	0.0000	0.0000
H2O	0.0000	0.0015	0.0000	0.0012	0.0000	0.0004
NBP[1]95*	0.0000	0.0005	0.0000	0.0017	0.0000	0.0009
NBP[1]121*	0.0000	0.0005	0.0000	0.0017	0.0000	0.0009
NBP[1]147*	0.0000	0.0005	0.0000	0.0018	0.0000	0.0009
NBP[1]171*	0.0000	0.0006	0.0000	0.0027	0.0000	0.0013
NBP[1]195*	0.0000	0.0006	0.0000	0.0026	0.0000	0.0013
NBP[1]222*	0.0000	0.0003	0.0000	0.0013	0.0000	0.0006
NBP[1]248*	0.0000	0.0001	0.0000	0.0007	0.0000	0.0003
NBP[1]273*	0.0000	0.0001	0.0000	0.0004	0.0000	0.0002
NBP[1]299*	0.0000	0.0000	0.0000	0.0002	0.0000	0.0001
NBP[1]325*	0.0000	0.0000	0.0000	0.0001	0.0000	0.0000
NBP[1]351*	0.0000	0.0000	0.0000	0.0000	0.0000	0.0000
NBP[1]377*	0.0000	0.0000	0.0000	0.0000	0.0000	0.0000
NBP[1]402*	0.0000	0.0000	0.0000	0.0000	0.0000	0.0000
NBP[1]428*	0.0000	0.0000	0.0000	0.0000	0.0000	0.0000
NBP[1]454*	0.0000	0.0000	0.0000	0.0000	0.0000	0.0000
NBP[1]480*	0.0000	0.0000	0.0000	0.0000	0.0000	0.0000
NBP[1]505*	0.0000	0.0000	0.0000	0.0000	0.0000	0.0000

* Specified by user.

Material Stream: Pandhi-C (continued)

Fluid Package: Basis-1
Property Package: Peng-Robinson

COMPOSITION

Vapour Phase (continued)

Phase Fraction 0.0000

COMPONENTS	MOLAR FLOW (kgmole/h)	MOLE FRACTION	MASS FLOW (tonne/d)	MASS FRACTION	LIQUID VOLUME FLOW (m3/h)	LIQUID VOLUME FRACTION
NBP[1]531*	0.0000	0.0000	0.0000	0.0000	0.0000	0.0000
NBP[1]557*	0.0000	0.0000	0.0000	0.0000	0.0000	0.0000
NBP[1]582*	0.0000	0.0000	0.0000	0.0000	0.0000	0.0000
NBP[1]608*	0.0000	0.0000	0.0000	0.0000	0.0000	0.0000
NBP[1]634*	0.0000	0.0000	0.0000	0.0000	0.0000	0.0000
NBP[1]659*	0.0000	0.0000	0.0000	0.0000	0.0000	0.0000
NBP[1]685*	0.0000	0.0000	0.0000	0.0000	0.0000	0.0000
NBP[1]711*	0.0000	0.0000	0.0000	0.0000	0.0000	0.0000
NBP[1]736*	0.0000	0.0000	0.0000	0.0000	0.0000	0.0000
NBP[1]762*	0.0000	0.0000	0.0000	0.0000	0.0000	0.0000
NBP[1]788*	0.0000	0.0000	0.0000	0.0000	0.0000	0.0000
NBP[1]825*	0.0000	0.0000	0.0000	0.0000	0.0000	0.0000
NBP[1]873*	0.0000	0.0000	0.0000	0.0000	0.0000	0.0000
NBP[1]926*	0.0000	0.0000	0.0000	0.0000	0.0000	0.0000
NBP[1]978*	0.0000	0.0000	0.0000	0.0000	0.0000	0.0000
NBP[1]1021*	0.0000	0.0000	0.0000	0.0000	0.0000	0.0000
NBP[1]1075*	0.0000	0.0000	0.0000	0.0000	0.0000	0.0000
NBP[1]1123*	0.0000	0.0000	0.0000	0.0000	0.0000	0.0000
NBP[1]1173*	0.0000	0.0000	0.0000	0.0000	0.0000	0.0000
NBP[1]1250*	0.0000	0.0000	0.0000	0.0000	0.0000	0.0000
NBP[1]1339*	0.0000	0.0000	0.0000	0.0000	0.0000	0.0000
NBP[1]1432*	0.0000	0.0000	0.0000	0.0000	0.0000	0.0000
NBP[1]1528*	0.0000	0.0000	0.0000	0.0000	0.0000	0.0000
NBP[1]1637*	0.0000	0.0000	0.0000	0.0000	0.0000	0.0000
NBP[1]1732*	0.0000	0.0000	0.0000	0.0000	0.0000	0.0000
NBP[1]1819*	0.0000	0.0000	0.0000	0.0000	0.0000	0.0000
NBP[1]1913*	0.0000	0.0000	0.0000	0.0023	0.0000	0.0008
Total	0.0000	1.0000	0.0000	1.0000	0.0000	1.0000

Liquid Phase

Phase Fraction 1.000

COMPONENTS	MOLAR FLOW (kgmole/h)	MOLE FRACTION	MASS FLOW (tonne/d)	MASS FRACTION	LIQUID VOLUME FLOW (m3/h)	LIQUID VOLUME FRACTION
Methane	2.0221	0.1136	0.7786	0.0144	0.1084	0.0364
Ethane	1.1465	0.0644	0.8274	0.0153	0.0969	0.0326
Propane	1.6775	0.0942	1.7753	0.0329	0.1460	0.0490
i-Butane	0.4420	0.0248	0.6166	0.0114	0.0457	0.0154
n-Butane	1.0672	0.0600	1.4887	0.0276	0.1064	0.0357
i-Pentane	0.3860	0.0217	0.6684	0.0124	0.0447	0.0150
n-Pentane	0.4950	0.0278	0.8571	0.0159	0.0567	0.0191
n-Hexane	1.1004	0.0618	2.2760	0.0422	0.1431	0.0481
Nitrogen	0.0228	0.0013	0.0153	0.0003	0.0008	0.0003
CO2	0.2393	0.0134	0.2527	0.0047	0.0128	0.0043
H2S	0.0000	0.0000	0.0000	0.0000	0.0000	0.0000
H2O	0.0107	0.0006	0.0046	0.0001	0.0002	0.0001
NBP[1]95*	0.1457	0.0082	0.2376	0.0044	0.0146	0.0049
NBP[1]121*	0.2063	0.0116	0.3606	0.0067	0.0218	0.0073
NBP[1]147*	0.3061	0.0172	0.5891	0.0109	0.0350	0.0118
NBP[1]171*	0.6492	0.0365	1.3660	0.0253	0.0800	0.0269
NBP[1]195*	0.9179	0.0516	2.0614	0.0382	0.1193	0.0401
NBP[1]222*	0.7271	0.0408	1.7563	0.0325	0.1004	0.0337
NBP[1]248*	0.6282	0.0353	1.6313	0.0302	0.0921	0.0309
NBP[1]273*	0.5177	0.0291	1.4378	0.0266	0.0803	0.0270
NBP[1]299*	0.4103	0.0230	1.2148	0.0225	0.0671	0.0225
NBP[1]325*	0.2995	0.0168	0.9422	0.0175	0.0515	0.0173

* Specified by user.

Material Stream: Pandhi-C (continued)

Fluid Package: Basis-1
Property Package: Peng-Robinson

COMPOSITION

Liquid Phase (continued)

Phase Fraction 1.000

COMPONENTS	MOLAR FLOW (kgmole/h)	MOLE FRACTION	MASS FLOW (tonne/d)	MASS FRACTION	LIQUID VOLUME FLOW (m3/h)	LIQUID VOLUME FRACTION
NBP[1]351*	0.2442	0.0137	0.8165	0.0151	0.0442	0.0148
NBP[1]377*	0.2240	0.0126	0.7989	0.0148	0.0428	0.0144
NBP[1]402*	0.2058	0.0116	0.7826	0.0145	0.0415	0.0139
NBP[1]428*	0.1959	0.0110	0.7949	0.0147	0.0417	0.0140
NBP[1]454*	0.1955	0.0110	0.8477	0.0157	0.0441	0.0148
NBP[1]480*	0.1981	0.0111	0.9180	0.0170	0.0473	0.0159
NBP[1]505*	0.1920	0.0108	0.9483	0.0176	0.0484	0.0162
NBP[1]531*	0.1852	0.0104	0.9740	0.0180	0.0492	0.0165
NBP[1]557*	0.1784	0.0100	0.9978	0.0185	0.0500	0.0168
NBP[1]582*	0.1706	0.0096	1.0132	0.0188	0.0503	0.0169
NBP[1]608*	0.1643	0.0092	1.0351	0.0192	0.0510	0.0171
NBP[1]634*	0.1611	0.0090	1.0753	0.0199	0.0526	0.0177
NBP[1]659*	0.1586	0.0089	1.1194	0.0207	0.0543	0.0182
NBP[1]685*	0.1641	0.0092	1.2227	0.0227	0.0588	0.0198
NBP[1]711*	0.1715	0.0096	1.3445	0.0249	0.0642	0.0216
NBP[1]736*	0.1697	0.0095	1.3915	0.0258	0.0659	0.0221
NBP[1]762*	0.1653	0.0093	1.4214	0.0263	0.0669	0.0225
NBP[1]788*	0.1585	0.0089	1.4424	0.0267	0.0674	0.0226
NBP[1]825*	0.2655	0.0149	2.5963	0.0481	0.1201	0.0404
NBP[1]873*	0.1830	0.0103	1.9404	0.0359	0.0887	0.0298
NBP[1]926*	0.1437	0.0081	1.6472	0.0305	0.0744	0.0250
NBP[1]978*	0.1474	0.0083	1.8524	0.0343	0.0825	0.0277
NBP[1]1021*	0.0728	0.0041	0.9655	0.0179	0.0426	0.0143
NBP[1]1075*	0.0449	0.0025	0.6310	0.0117	0.0276	0.0093
NBP[1]1123*	0.0417	0.0023	0.6267	0.0116	0.0271	0.0091
NBP[1]1173*	0.0300	0.0017	0.4772	0.0088	0.0205	0.0069
NBP[1]1250*	0.0393	0.0022	0.6767	0.0125	0.0287	0.0096
NBP[1]1339*	0.0364	0.0020	0.6999	0.0130	0.0291	0.0098
NBP[1]1432*	0.0257	0.0014	0.5397	0.0100	0.0221	0.0074
NBP[1]1528*	0.0180	0.0010	0.4082	0.0076	0.0165	0.0055
NBP[1]1637*	0.0127	0.0007	0.3047	0.0056	0.0122	0.0041
NBP[1]1732*	0.0101	0.0006	0.2565	0.0048	0.0101	0.0034
NBP[1]1819*	0.0096	0.0005	0.2561	0.0047	0.0100	0.0034
NBP[1]1913*	0.0000	0.0000	0.0000	0.0000	0.0000	0.0000
Total	17.8012	1.0000	53.9808	1.0000	2.9766	1.0000

Aqueous Phase

Phase Fraction 0.0000

COMPONENTS	MOLAR FLOW (kgmole/h)	MOLE FRACTION	MASS FLOW (tonne/d)	MASS FRACTION	LIQUID VOLUME FLOW (m3/h)	LIQUID VOLUME FRACTION
Methane	0.0000	0.0000	0.0000	0.0000	0.0000	0.0000
Ethane	0.0000	0.0000	0.0000	0.0000	0.0000	0.0000
Propane	0.0000	0.0000	0.0000	0.0000	0.0000	0.0000
i-Butane	0.0000	0.0000	0.0000	0.0000	0.0000	0.0000
n-Butane	0.0000	0.0000	0.0000	0.0000	0.0000	0.0000
i-Pentane	0.0000	0.0000	0.0000	0.0000	0.0000	0.0000
n-Pentane	0.0000	0.0000	0.0000	0.0000	0.0000	0.0000
n-Hexane	0.0000	0.0000	0.0000	0.0000	0.0000	0.0000
Nitrogen	0.0000	0.0000	0.0000	0.0000	0.0000	0.0000
CO2	0.0000	0.0004	0.0000	0.0010	0.0000	0.0012
H2S	0.0000	0.0000	0.0000	0.0000	0.0000	0.0000
H2O	0.0000	0.9996	0.0000	0.9990	0.0000	0.9988
NBP[1]95*	0.0000	0.0000	0.0000	0.0000	0.0000	0.0000
NBP[1]121*	0.0000	0.0000	0.0000	0.0000	0.0000	0.0000
NBP[1]147*	0.0000	0.0000	0.0000	0.0000	0.0000	0.0000

* Specified by user.

Material Stream: Pandhi-C (continued)

Fluid Package: Basis-1
Property Package: Peng-Robinson

COMPOSITION

Aqueous Phase (continued)

Phase Fraction 0.0000

COMPONENTS	MOLAR FLOW (kgmole/h)	MOLE FRACTION	MASS FLOW (tonne/d)	MASS FRACTION	LIQUID VOLUME FLOW (m3/h)	LIQUID VOLUME FRACTION
NBP[1]171*	0.0000	0.0000	0.0000	0.0000	0.0000	0.0000
NBP[1]195*	0.0000	0.0000	0.0000	0.0000	0.0000	0.0000
NBP[1]222*	0.0000	0.0000	0.0000	0.0000	0.0000	0.0000
NBP[1]248*	0.0000	0.0000	0.0000	0.0000	0.0000	0.0000
NBP[1]273*	0.0000	0.0000	0.0000	0.0000	0.0000	0.0000
NBP[1]299*	0.0000	0.0000	0.0000	0.0000	0.0000	0.0000
NBP[1]325*	0.0000	0.0000	0.0000	0.0000	0.0000	0.0000
NBP[1]351*	0.0000	0.0000	0.0000	0.0000	0.0000	0.0000
NBP[1]377*	0.0000	0.0000	0.0000	0.0000	0.0000	0.0000
NBP[1]402*	0.0000	0.0000	0.0000	0.0000	0.0000	0.0000
NBP[1]428*	0.0000	0.0000	0.0000	0.0000	0.0000	0.0000
NBP[1]454*	0.0000	0.0000	0.0000	0.0000	0.0000	0.0000
NBP[1]480*	0.0000	0.0000	0.0000	0.0000	0.0000	0.0000
NBP[1]505*	0.0000	0.0000	0.0000	0.0000	0.0000	0.0000
NBP[1]531*	0.0000	0.0000	0.0000	0.0000	0.0000	0.0000
NBP[1]557*	0.0000	0.0000	0.0000	0.0000	0.0000	0.0000
NBP[1]582*	0.0000	0.0000	0.0000	0.0000	0.0000	0.0000
NBP[1]608*	0.0000	0.0000	0.0000	0.0000	0.0000	0.0000
NBP[1]634*	0.0000	0.0000	0.0000	0.0000	0.0000	0.0000
NBP[1]659*	0.0000	0.0000	0.0000	0.0000	0.0000	0.0000
NBP[1]685*	0.0000	0.0000	0.0000	0.0000	0.0000	0.0000
NBP[1]711*	0.0000	0.0000	0.0000	0.0000	0.0000	0.0000
NBP[1]736*	0.0000	0.0000	0.0000	0.0000	0.0000	0.0000
NBP[1]762*	0.0000	0.0000	0.0000	0.0000	0.0000	0.0000
NBP[1]788*	0.0000	0.0000	0.0000	0.0000	0.0000	0.0000
NBP[1]825*	0.0000	0.0000	0.0000	0.0000	0.0000	0.0000
NBP[1]873*	0.0000	0.0000	0.0000	0.0000	0.0000	0.0000
NBP[1]926*	0.0000	0.0000	0.0000	0.0000	0.0000	0.0000
NBP[1]978*	0.0000	0.0000	0.0000	0.0000	0.0000	0.0000
NBP[1]1021*	0.0000	0.0000	0.0000	0.0000	0.0000	0.0000
NBP[1]1075*	0.0000	0.0000	0.0000	0.0000	0.0000	0.0000
NBP[1]1123*	0.0000	0.0000	0.0000	0.0000	0.0000	0.0000
NBP[1]1173*	0.0000	0.0000	0.0000	0.0000	0.0000	0.0000
NBP[1]1250*	0.0000	0.0000	0.0000	0.0000	0.0000	0.0000
NBP[1]1339*	0.0000	0.0000	0.0000	0.0000	0.0000	0.0000
NBP[1]1432*	0.0000	0.0000	0.0000	0.0000	0.0000	0.0000
NBP[1]1528*	0.0000	0.0000	0.0000	0.0000	0.0000	0.0000
NBP[1]1637*	0.0000	0.0000	0.0000	0.0000	0.0000	0.0000
NBP[1]1732*	0.0000	0.0000	0.0000	0.0000	0.0000	0.0000
NBP[1]1819*	0.0000	0.0000	0.0000	0.0000	0.0000	0.0000
NBP[1]1913*	0.0000	0.0000	0.0000	0.0000	0.0000	0.0000
Total	0.0000	1.0000	0.0000	1.0000	0.0000	1.0000

Material Stream: Pandhi-Cond.

Fluid Package: Basis-1
Property Package: Peng-Robinson

CONDITIONS

		Overall	Vapour Phase	Liquid Phase	Aqueous Phase
Vapour / Phase Fraction		0.0000	0.0000	1.0000	0.0000
Temperature:	(F)	134.9	134.9	134.9	134.9
Pressure:	(psig)	1235	1235	1235	1235
Molar Flow	(MMSCFD)	0.3795	0.0000	0.3795	0.0000
Mass Flow	(tonne/d)	51.02	0.0000	51.02	0.0000
Std Ideal Liq Vol Flow	(barrel/day)	436.6	0.0000	436.6	0.0000

* Specified by user.

Material Stream: Pandhi-Cond. (continued)

Fluid Package: Basis-1
Property Package: Peng-Robinson

CONDITIONS

	Overall	Vapour Phase	Liquid Phase	Aqueous Phase
Molar Enthalpy (kJ/kgmole)	-2.579e+005	-9.012e+004	-2.579e+005	-2.836e+005
Molar Entropy (kJ/kgmole-C)	238.0	152.4	238.0	61.60
Heat Flow (MMBtu/hr)	-4.620	0.0000	-4.620	0.0000
Liq Vol Flow @Std Cond (barrel/day)	418.1 *	0.0000	418.1	0.0000

PROPERTIES

	Overall	Vapour Phase	Liquid Phase	Aqueous Phase
Molecular Weight	112.5	21.93	112.5	18.03
Molar Density (kgmole/m3)	6.446	3.882	6.446	54.68
Mass Density (kg/m3)	725.0	85.13	725.0	985.8
Act. Volume Flow (barrel/day)	442.7	0.0000	442.7	0.0000
Mass Enthalpy (kJ/kg)	-2293	-4110	-2293	-1.573e+004
Mass Entropy (kJ/kg-C)	2.116	6.950	2.116	3.416
Heat Capacity (kJ/kgmole-C)	242.5	58.84	242.5	77.73
Mass Heat Capacity (kJ/kg-C)	2.157	2.683	2.157	4.311
LHV Molar Basis (Std) (Btu/SCF)	---	---	---	1.593e-003
LHV Mass Basis (Std) (kJ/kg)	---	---	---	7.799e-002
Phase Fraction [Vol. Basis]	---	---	1.000	---
Phase Fraction [Mass Basis]	0.0000	0.0000	1.000	0.0000
Partial Pressure of CO2 (psig)	-14.70	---	---	---
Cost Based on Flow (Cost/s)	0.0000	0.0000	0.0000	0.0000
Act. Gas Flow (ACT_m3/h)	---	---	---	---
Avg. Liq. Density (kgmole/m3)	6.535	16.70	6.535	55.34
Specific Heat (kJ/kgmole-C)	242.5	58.84	242.5	77.73
Std. Gas Flow (STD_m3/h)	446.9	0.0000	446.9	0.0000
Std. Ideal Liq. Mass Density (kg/m3)	735.0	366.1	735.0	997.7
Act. Liq. Flow (barrel/day)	442.7	---	442.7	0.0000
Z Factor	---	0.8082	0.4867	5.738e-002
Watson K	12.04	17.09	12.04	8.494
User Property	---	---	---	---
Partial Pressure of H2S (psig)	-14.70	---	---	---
Cp/(Cp - R)	1.035	1.165	1.035	1.120
Cp/Cv	1.247	1.571	1.247	1.160
Heat of Vap. (kJ/kgmole)	1.689e+005	---	---	---
Kinematic Viscosity (cSt)	5.420	0.1772	5.420	0.4910
Liq. Mass Density (Std. Cond) (kg/m3)	767.6	0.9313	767.6	1015
Liq. Vol. Flow (Std. Cond) (barrel/day)	418.1	0.0000	418.1	0.0000
Liquid Fraction	1.000	0.0000	1.000	1.000
Molar Volume (m3/kgmole)	0.1551	0.2576	0.1551	1.829e-002
Mass Heat of Vap. (kJ/kg)	1502	---	---	---
Phase Fraction [Molar Basis]	0.0000	0.0000	1.0000	0.0000
Surface Tension (dyne/cm)	11.50	---	11.50	66.43
Thermal Conductivity (W/m-K)	8.981e-002	4.244e-002	8.981e-002	0.6507
Viscosity (cP)	3.929	1.509e-002	3.929	0.4840
Cv (Semi-Ideal) (kJ/kgmole-C)	234.2	50.53	234.2	69.41
Mass Cv (Semi-Ideal) (kJ/kg-C)	2.083	2.304	2.083	3.850
Cv (kJ/kgmole-C)	194.6	37.46	194.6	67.01
Mass Cv (kJ/kg-C)	1.730	1.708	1.730	3.717
Cv (Ent. Method) (kJ/kgmole-C)	205.8	---	205.8	65.44
Mass Cv (Ent. Method) (kJ/kg-C)	1.830	---	1.830	3.630
Cp/Cv (Ent. Method)	1.178	---	1.178	1.188
Reid VP at 37.8 C (psig)	201.9	---	201.9	---
True VP at 37.8 C (psig)	1094	2958	1094	1267
Liq. Vol. Flow - Sum(Std. Cond) (barrel/day)	418.1	0.0000	418.1	0.0000
HHV Molar Basis (Std) (Btu/SCF)	---	---	---	46.44
HHV Mass Basis (Std) (kJ/kg)	---	---	---	2274
CO2 Loading	---	---	---	---

* Specified by user.

Material Stream: Pandhi-Cond. (continued)

Fluid Package: Basis-1
Property Package: Peng-Robinson

PROPERTIES

	Overall	Vapour Phase	Liquid Phase	Aqueous Phase
CO2 App ML Con (kgmole/m3)	0.1365	---	0.1365	---
CO2 App WT Con (kgmol/kg)	1.883e-004	---	1.883e-004	---
Phase Fraction [Act. Vol. Basis]	0.0000	0.0000	1.000	0.0000
Mass Exergy (kJ/kg)	47.72	---	---	---
Viscosity Index	19.74	---	---	---
Ideal Gas Cp/Cv	1.045	1.231	1.045	1.327
Ideal Gas Cp (kJ/kgmole-C)	193.2	44.35	193.2	33.78
Mass Ideal Gas Cp (kJ/kg-C)	1.718	2.022	1.718	1.873
Bubble Point Pressure (psig)	1235	---	---	---

COMPOSITION

Overall Phase

Vapour Fraction 0.0000

COMPONENTS	MOLAR FLOW (kgmole/h)	MOLE FRACTION	MASS FLOW (tonne/d)	MASS FRACTION	LIQUID VOLUME FLOW (m3/h)	LIQUID VOLUME FRACTION
Methane	4.4834	0.2372	1.7262	0.0338	0.2402	0.0831
Ethane	1.6120	0.0853	1.1633	0.0228	0.1363	0.0471
Propane	1.6831	0.0890	1.7813	0.0349	0.1465	0.0506
i-Butane	0.3565	0.0189	0.4973	0.0097	0.0369	0.0127
n-Butane	0.8171	0.0432	1.1398	0.0223	0.0814	0.0282
i-Pentane	0.2628	0.0139	0.4551	0.0089	0.0304	0.0105
n-Pentane	0.3324	0.0176	0.5757	0.0113	0.0381	0.0132
n-Hexane	0.7549	0.0399	1.5614	0.0306	0.0982	0.0339
Nitrogen	0.0653	0.0035	0.0439	0.0009	0.0023	0.0008
CO2	0.4004	0.0212	0.4229	0.0083	0.0213	0.0074
H2S	0.0000	0.0000	0.0000	0.0000	0.0000	0.0000
H2O	0.0359	0.0019	0.0155	0.0003	0.0006	0.0002
NBP[1]95*	0.0998	0.0053	0.1627	0.0032	0.0100	0.0034
NBP[1]121*	0.1395	0.0074	0.2439	0.0048	0.0148	0.0051
NBP[1]147*	0.2100	0.0111	0.4041	0.0079	0.0240	0.0083
NBP[1]171*	0.4597	0.0243	0.9672	0.0190	0.0566	0.0196
NBP[1]195*	0.6777	0.0359	1.5220	0.0298	0.0881	0.0304
NBP[1]222*	0.5672	0.0300	1.3699	0.0268	0.0783	0.0271
NBP[1]248*	0.5160	0.0273	1.3399	0.0263	0.0757	0.0262
NBP[1]273*	0.4453	0.0236	1.2368	0.0242	0.0690	0.0239
NBP[1]299*	0.3669	0.0194	1.0864	0.0213	0.0600	0.0207
NBP[1]325*	0.2765	0.0146	0.8699	0.0170	0.0476	0.0164
NBP[1]351*	0.2310	0.0122	0.7723	0.0151	0.0418	0.0145
NBP[1]377*	0.2158	0.0114	0.7696	0.0151	0.0412	0.0143
NBP[1]402*	0.2007	0.0106	0.7634	0.0150	0.0405	0.0140
NBP[1]428*	0.1928	0.0102	0.7823	0.0153	0.0411	0.0142
NBP[1]454*	0.1935	0.0102	0.8391	0.0164	0.0436	0.0151
NBP[1]480*	0.1969	0.0104	0.9122	0.0179	0.0470	0.0162
NBP[1]505*	0.1912	0.0101	0.9446	0.0185	0.0482	0.0167
NBP[1]531*	0.1848	0.0098	0.9717	0.0190	0.0491	0.0170
NBP[1]557*	0.1782	0.0094	0.9965	0.0195	0.0499	0.0173
NBP[1]582*	0.1704	0.0090	1.0124	0.0198	0.0503	0.0174
NBP[1]608*	0.1642	0.0087	1.0346	0.0203	0.0510	0.0176
NBP[1]634*	0.1611	0.0085	1.0751	0.0211	0.0525	0.0182
NBP[1]659*	0.1586	0.0084	1.1193	0.0219	0.0543	0.0188
NBP[1]685*	0.1641	0.0087	1.2227	0.0240	0.0588	0.0203
NBP[1]711*	0.1715	0.0091	1.3444	0.0263	0.0642	0.0222
NBP[1]736*	0.1697	0.0090	1.3915	0.0273	0.0659	0.0228
NBP[1]762*	0.1653	0.0087	1.4214	0.0279	0.0669	0.0231
NBP[1]788*	0.1585	0.0084	1.4424	0.0283	0.0674	0.0233
NBP[1]825*	0.2655	0.0140	2.5963	0.0509	0.1201	0.0415
NBP[1]873*	0.1830	0.0097	1.9404	0.0380	0.0887	0.0307

* Specified by user.

Material Stream: Pandhi-Cond. (continued)

Fluid Package: Basis-1
Property Package: Peng-Robinson

COMPOSITION

Overall Phase (continued)

Vapour Fraction 0.0000

COMPONENTS	MOLAR FLOW (kgmole/h)	MOLE FRACTION	MASS FLOW (tonne/d)	MASS FRACTION	LIQUID VOLUME FLOW (m3/h)	LIQUID VOLUME FRACTION
NBP[1]926*	0.1437	0.0076	1.6472	0.0323	0.0744	0.0257
NBP[1]978*	0.1474	0.0078	1.8524	0.0363	0.0825	0.0285
NBP[1]1021*	0.0728	0.0039	0.9655	0.0189	0.0426	0.0147
NBP[1]1075*	0.0449	0.0024	0.6310	0.0124	0.0276	0.0095
NBP[1]1123*	0.0417	0.0022	0.6267	0.0123	0.0271	0.0094
NBP[1]1173*	0.0300	0.0016	0.4772	0.0094	0.0205	0.0071
NBP[1]1250*	0.0393	0.0021	0.6767	0.0133	0.0287	0.0099
NBP[1]1339*	0.0364	0.0019	0.6999	0.0137	0.0291	0.0101
NBP[1]1432*	0.0257	0.0014	0.5397	0.0106	0.0221	0.0077
NBP[1]1528*	0.0180	0.0010	0.4082	0.0080	0.0165	0.0057
NBP[1]1637*	0.0127	0.0007	0.3047	0.0060	0.0122	0.0042
NBP[1]1732*	0.0101	0.0005	0.2548	0.0050	0.0101	0.0035
NBP[1]1819*	0.0000	0.0000	0.0000	0.0000	0.0000	0.0000
NBP[1]1913*	0.0000	0.0000	0.0000	0.0000	0.0000	0.0000
Total	18.9020	1.0000	51.0219	1.0000	2.8923	1.0000

Vapour Phase

Phase Fraction 0.0000

COMPONENTS	MOLAR FLOW (kgmole/h)	MOLE FRACTION	MASS FLOW (tonne/d)	MASS FRACTION	LIQUID VOLUME FLOW (m3/h)	LIQUID VOLUME FRACTION
Methane	0.0000	0.7578	0.0000	0.5544	0.0000	0.6780
Ethane	0.0000	0.1017	0.0000	0.1395	0.0000	0.1436
Propane	0.0000	0.0508	0.0000	0.1022	0.0000	0.0739
i-Butane	0.0000	0.0063	0.0000	0.0166	0.0000	0.0108
n-Butane	0.0000	0.0117	0.0000	0.0311	0.0000	0.0195
i-Pentane	0.0000	0.0022	0.0000	0.0072	0.0000	0.0042
n-Pentane	0.0000	0.0023	0.0000	0.0077	0.0000	0.0045
n-Hexane	0.0000	0.0027	0.0000	0.0105	0.0000	0.0058
Nitrogen	0.0000	0.0207	0.0000	0.0264	0.0000	0.0120
CO2	0.0000	0.0335	0.0000	0.0673	0.0000	0.0298
H2S	0.0000	0.0000	0.0000	0.0000	0.0000	0.0000
H2O	0.0000	0.0028	0.0000	0.0023	0.0000	0.0008
NBP[1]95*	0.0000	0.0007	0.0000	0.0022	0.0000	0.0012
NBP[1]121*	0.0000	0.0007	0.0000	0.0025	0.0000	0.0013
NBP[1]147*	0.0000	0.0008	0.0000	0.0030	0.0000	0.0016
NBP[1]171*	0.0000	0.0014	0.0000	0.0054	0.0000	0.0028
NBP[1]195*	0.0000	0.0015	0.0000	0.0064	0.0000	0.0032
NBP[1]222*	0.0000	0.0009	0.0000	0.0040	0.0000	0.0020
NBP[1]248*	0.0000	0.0006	0.0000	0.0028	0.0000	0.0014
NBP[1]273*	0.0000	0.0003	0.0000	0.0018	0.0000	0.0009
NBP[1]299*	0.0000	0.0002	0.0000	0.0011	0.0000	0.0005
NBP[1]325*	0.0000	0.0001	0.0000	0.0006	0.0000	0.0003
NBP[1]351*	0.0000	0.0001	0.0000	0.0003	0.0000	0.0002
NBP[1]377*	0.0000	0.0000	0.0000	0.0002	0.0000	0.0001
NBP[1]402*	0.0000	0.0000	0.0000	0.0001	0.0000	0.0001
NBP[1]428*	0.0000	0.0000	0.0000	0.0001	0.0000	0.0000
NBP[1]454*	0.0000	0.0000	0.0000	0.0001	0.0000	0.0000
NBP[1]480*	0.0000	0.0000	0.0000	0.0000	0.0000	0.0000
NBP[1]505*	0.0000	0.0000	0.0000	0.0000	0.0000	0.0000
NBP[1]531*	0.0000	0.0000	0.0000	0.0000	0.0000	0.0000
NBP[1]557*	0.0000	0.0000	0.0000	0.0000	0.0000	0.0000
NBP[1]582*	0.0000	0.0000	0.0000	0.0000	0.0000	0.0000
NBP[1]608*	0.0000	0.0000	0.0000	0.0000	0.0000	0.0000
NBP[1]634*	0.0000	0.0000	0.0000	0.0000	0.0000	0.0000
NBP[1]659*	0.0000	0.0000	0.0000	0.0000	0.0000	0.0000

* Specified by user.

Material Stream: Pandhi-Cond. (continued)

Fluid Package: Basis-1
Property Package: Peng-Robinson

COMPOSITION

Vapour Phase (continued)

Phase Fraction 0.0000

COMPONENTS	MOLAR FLOW (kgmole/h)	MOLE FRACTION	MASS FLOW (tonne/d)	MASS FRACTION	LIQUID VOLUME FLOW (m3/h)	LIQUID VOLUME FRACTION
NBP[1]685*	0.0000	0.0000	0.0000	0.0000	0.0000	0.0000
NBP[1]711*	0.0000	0.0000	0.0000	0.0000	0.0000	0.0000
NBP[1]736*	0.0000	0.0000	0.0000	0.0000	0.0000	0.0000
NBP[1]762*	0.0000	0.0000	0.0000	0.0000	0.0000	0.0000
NBP[1]788*	0.0000	0.0000	0.0000	0.0000	0.0000	0.0000
NBP[1]825*	0.0000	0.0000	0.0000	0.0000	0.0000	0.0000
NBP[1]873*	0.0000	0.0000	0.0000	0.0000	0.0000	0.0000
NBP[1]926*	0.0000	0.0000	0.0000	0.0000	0.0000	0.0000
NBP[1]978*	0.0000	0.0000	0.0000	0.0000	0.0000	0.0000
NBP[1]1021*	0.0000	0.0000	0.0000	0.0000	0.0000	0.0000
NBP[1]1075*	0.0000	0.0000	0.0000	0.0000	0.0000	0.0000
NBP[1]1123*	0.0000	0.0000	0.0000	0.0000	0.0000	0.0000
NBP[1]1173*	0.0000	0.0000	0.0000	0.0000	0.0000	0.0000
NBP[1]1250*	0.0000	0.0000	0.0000	0.0000	0.0000	0.0000
NBP[1]1339*	0.0000	0.0000	0.0000	0.0000	0.0000	0.0000
NBP[1]1432*	0.0000	0.0000	0.0000	0.0000	0.0000	0.0000
NBP[1]1528*	0.0000	0.0000	0.0000	0.0000	0.0000	0.0000
NBP[1]1637*	0.0000	0.0000	0.0000	0.0000	0.0000	0.0000
NBP[1]1732*	0.0000	0.0000	0.0000	0.0000	0.0000	0.0000
NBP[1]1819*	0.0000	0.0000	0.0000	0.0018	0.0000	0.0006
NBP[1]1913*	0.0000	0.0000	0.0000	0.0022	0.0000	0.0008
Total	0.0000	1.0000	0.0000	1.0000	0.0000	1.0000

Liquid Phase

Phase Fraction 1.000

COMPONENTS	MOLAR FLOW (kgmole/h)	MOLE FRACTION	MASS FLOW (tonne/d)	MASS FRACTION	LIQUID VOLUME FLOW (m3/h)	LIQUID VOLUME FRACTION
Methane	4.4834	0.2372	1.7262	0.0338	0.2402	0.0831
Ethane	1.6120	0.0853	1.1633	0.0228	0.1363	0.0471
Propane	1.6831	0.0890	1.7813	0.0349	0.1465	0.0506
i-Butane	0.3565	0.0189	0.4973	0.0097	0.0369	0.0127
n-Butane	0.8171	0.0432	1.1398	0.0223	0.0814	0.0282
i-Pentane	0.2628	0.0139	0.4551	0.0089	0.0304	0.0105
n-Pentane	0.3324	0.0176	0.5757	0.0113	0.0381	0.0132
n-Hexane	0.7549	0.0399	1.5614	0.0306	0.0982	0.0339
Nitrogen	0.0653	0.0035	0.0439	0.0009	0.0023	0.0008
CO2	0.4004	0.0212	0.4229	0.0083	0.0213	0.0074
H2S	0.0000	0.0000	0.0000	0.0000	0.0000	0.0000
H2O	0.0359	0.0019	0.0155	0.0003	0.0006	0.0002
NBP[1]95*	0.0998	0.0053	0.1627	0.0032	0.0100	0.0034
NBP[1]121*	0.1395	0.0074	0.2439	0.0048	0.0148	0.0051
NBP[1]147*	0.2100	0.0111	0.4041	0.0079	0.0240	0.0083
NBP[1]171*	0.4597	0.0243	0.9672	0.0190	0.0566	0.0196
NBP[1]195*	0.6777	0.0359	1.5220	0.0298	0.0881	0.0304
NBP[1]222*	0.5672	0.0300	1.3699	0.0268	0.0783	0.0271
NBP[1]248*	0.5160	0.0273	1.3399	0.0263	0.0757	0.0262
NBP[1]273*	0.4453	0.0236	1.2368	0.0242	0.0690	0.0239
NBP[1]299*	0.3669	0.0194	1.0864	0.0213	0.0600	0.0207
NBP[1]325*	0.2765	0.0146	0.8699	0.0170	0.0476	0.0164
NBP[1]351*	0.2310	0.0122	0.7723	0.0151	0.0418	0.0145
NBP[1]377*	0.2158	0.0114	0.7696	0.0151	0.0412	0.0143
NBP[1]402*	0.2007	0.0106	0.7634	0.0150	0.0405	0.0140
NBP[1]428*	0.1928	0.0102	0.7823	0.0153	0.0411	0.0142
NBP[1]454*	0.1935	0.0102	0.8391	0.0164	0.0436	0.0151
NBP[1]480*	0.1969	0.0104	0.9122	0.0179	0.0470	0.0162

Licensed to: PETROCHEMICAL ENGINEERIN
* Specified by user.

Material Stream: Pandhi-Cond. (continued)

Fluid Package: Basis-1
Property Package: Peng-Robinson

COMPOSITION

Liquid Phase (continued)

Phase Fraction 1.000

COMPONENTS	MOLAR FLOW (kgmole/h)	MOLE FRACTION	MASS FLOW (tonne/d)	MASS FRACTION	LIQUID VOLUME FLOW (m3/h)	LIQUID VOLUME FRACTION
NBP[1]505*	0.1912	0.0101	0.9446	0.0185	0.0482	0.0167
NBP[1]531*	0.1848	0.0098	0.9717	0.0190	0.0491	0.0170
NBP[1]557*	0.1782	0.0094	0.9965	0.0195	0.0499	0.0173
NBP[1]582*	0.1704	0.0090	1.0124	0.0198	0.0503	0.0174
NBP[1]608*	0.1642	0.0087	1.0346	0.0203	0.0510	0.0176
NBP[1]634*	0.1611	0.0085	1.0751	0.0211	0.0525	0.0182
NBP[1]659*	0.1586	0.0084	1.1193	0.0219	0.0543	0.0188
NBP[1]685*	0.1641	0.0087	1.2227	0.0240	0.0588	0.0203
NBP[1]711*	0.1715	0.0091	1.3444	0.0263	0.0642	0.0222
NBP[1]736*	0.1697	0.0090	1.3915	0.0273	0.0659	0.0228
NBP[1]762*	0.1653	0.0087	1.4214	0.0279	0.0669	0.0231
NBP[1]788*	0.1585	0.0084	1.4424	0.0283	0.0674	0.0233
NBP[1]825*	0.2655	0.0140	2.5963	0.0509	0.1201	0.0415
NBP[1]873*	0.1830	0.0097	1.9404	0.0380	0.0887	0.0307
NBP[1]926*	0.1437	0.0076	1.6472	0.0323	0.0744	0.0257
NBP[1]978*	0.1474	0.0078	1.8524	0.0363	0.0825	0.0285
NBP[1]1021*	0.0728	0.0039	0.9655	0.0189	0.0426	0.0147
NBP[1]1075*	0.0449	0.0024	0.6310	0.0124	0.0276	0.0095
NBP[1]1123*	0.0417	0.0022	0.6267	0.0123	0.0271	0.0094
NBP[1]1173*	0.0300	0.0016	0.4772	0.0094	0.0205	0.0071
NBP[1]1250*	0.0393	0.0021	0.6767	0.0133	0.0287	0.0099
NBP[1]1339*	0.0364	0.0019	0.6999	0.0137	0.0291	0.0101
NBP[1]1432*	0.0257	0.0014	0.5397	0.0106	0.0221	0.0077
NBP[1]1528*	0.0180	0.0010	0.4082	0.0080	0.0165	0.0057
NBP[1]1637*	0.0127	0.0007	0.3047	0.0060	0.0122	0.0042
NBP[1]1732*	0.0101	0.0005	0.2548	0.0050	0.0101	0.0035
NBP[1]1819*	0.0000	0.0000	0.0000	0.0000	0.0000	0.0000
NBP[1]1913*	0.0000	0.0000	0.0000	0.0000	0.0000	0.0000
Total	18.9020	1.0000	51.0219	1.0000	2.8923	1.0000

Aqueous Phase

Phase Fraction 0.0000

COMPONENTS	MOLAR FLOW (kgmole/h)	MOLE FRACTION	MASS FLOW (tonne/d)	MASS FRACTION	LIQUID VOLUME FLOW (m3/h)	LIQUID VOLUME FRACTION
Methane	0.0000	0.0000	0.0000	0.0000	0.0000	0.0000
Ethane	0.0000	0.0000	0.0000	0.0000	0.0000	0.0000
Propane	0.0000	0.0000	0.0000	0.0000	0.0000	0.0000
i-Butane	0.0000	0.0000	0.0000	0.0000	0.0000	0.0000
n-Butane	0.0000	0.0000	0.0000	0.0000	0.0000	0.0000
i-Pentane	0.0000	0.0000	0.0000	0.0000	0.0000	0.0000
n-Pentane	0.0000	0.0000	0.0000	0.0000	0.0000	0.0000
n-Hexane	0.0000	0.0000	0.0000	0.0000	0.0000	0.0000
Nitrogen	0.0000	0.0000	0.0000	0.0000	0.0000	0.0000
CO2	0.0000	0.0005	0.0000	0.0013	0.0000	0.0016
H2S	0.0000	0.0000	0.0000	0.0000	0.0000	0.0000
H2O	0.0000	0.9995	0.0000	0.9987	0.0000	0.9984
NBP[1]95*	0.0000	0.0000	0.0000	0.0000	0.0000	0.0000
NBP[1]121*	0.0000	0.0000	0.0000	0.0000	0.0000	0.0000
NBP[1]147*	0.0000	0.0000	0.0000	0.0000	0.0000	0.0000
NBP[1]171*	0.0000	0.0000	0.0000	0.0000	0.0000	0.0000
NBP[1]195*	0.0000	0.0000	0.0000	0.0000	0.0000	0.0000
NBP[1]222*	0.0000	0.0000	0.0000	0.0000	0.0000	0.0000
NBP[1]248*	0.0000	0.0000	0.0000	0.0000	0.0000	0.0000
NBP[1]273*	0.0000	0.0000	0.0000	0.0000	0.0000	0.0000
NBP[1]299*	0.0000	0.0000	0.0000	0.0000	0.0000	0.0000

* Specified by user.

Material Stream: Pandhi-Cond. (continued)

Fluid Package: Basis-1
Property Package: Peng-Robinson

COMPOSITION

Aqueous Phase (continued)

Phase Fraction 0.0000

COMPONENTS	MOLAR FLOW (kgmole/h)	MOLE FRACTION	MASS FLOW (tonne/d)	MASS FRACTION	LIQUID VOLUME FLOW (m3/h)	LIQUID VOLUME FRACTION
NBP[1]325*	0.0000	0.0000	0.0000	0.0000	0.0000	0.0000
NBP[1]351*	0.0000	0.0000	0.0000	0.0000	0.0000	0.0000
NBP[1]377*	0.0000	0.0000	0.0000	0.0000	0.0000	0.0000
NBP[1]402*	0.0000	0.0000	0.0000	0.0000	0.0000	0.0000
NBP[1]428*	0.0000	0.0000	0.0000	0.0000	0.0000	0.0000
NBP[1]454*	0.0000	0.0000	0.0000	0.0000	0.0000	0.0000
NBP[1]480*	0.0000	0.0000	0.0000	0.0000	0.0000	0.0000
NBP[1]505*	0.0000	0.0000	0.0000	0.0000	0.0000	0.0000
NBP[1]531*	0.0000	0.0000	0.0000	0.0000	0.0000	0.0000
NBP[1]557*	0.0000	0.0000	0.0000	0.0000	0.0000	0.0000
NBP[1]582*	0.0000	0.0000	0.0000	0.0000	0.0000	0.0000
NBP[1]608*	0.0000	0.0000	0.0000	0.0000	0.0000	0.0000
NBP[1]634*	0.0000	0.0000	0.0000	0.0000	0.0000	0.0000
NBP[1]659*	0.0000	0.0000	0.0000	0.0000	0.0000	0.0000
NBP[1]685*	0.0000	0.0000	0.0000	0.0000	0.0000	0.0000
NBP[1]711*	0.0000	0.0000	0.0000	0.0000	0.0000	0.0000
NBP[1]736*	0.0000	0.0000	0.0000	0.0000	0.0000	0.0000
NBP[1]762*	0.0000	0.0000	0.0000	0.0000	0.0000	0.0000
NBP[1]788*	0.0000	0.0000	0.0000	0.0000	0.0000	0.0000
NBP[1]825*	0.0000	0.0000	0.0000	0.0000	0.0000	0.0000
NBP[1]873*	0.0000	0.0000	0.0000	0.0000	0.0000	0.0000
NBP[1]926*	0.0000	0.0000	0.0000	0.0000	0.0000	0.0000
NBP[1]978*	0.0000	0.0000	0.0000	0.0000	0.0000	0.0000
NBP[1]1021*	0.0000	0.0000	0.0000	0.0000	0.0000	0.0000
NBP[1]1075*	0.0000	0.0000	0.0000	0.0000	0.0000	0.0000
NBP[1]1123*	0.0000	0.0000	0.0000	0.0000	0.0000	0.0000
NBP[1]1173*	0.0000	0.0000	0.0000	0.0000	0.0000	0.0000
NBP[1]1250*	0.0000	0.0000	0.0000	0.0000	0.0000	0.0000
NBP[1]1339*	0.0000	0.0000	0.0000	0.0000	0.0000	0.0000
NBP[1]1432*	0.0000	0.0000	0.0000	0.0000	0.0000	0.0000
NBP[1]1528*	0.0000	0.0000	0.0000	0.0000	0.0000	0.0000
NBP[1]1637*	0.0000	0.0000	0.0000	0.0000	0.0000	0.0000
NBP[1]1732*	0.0000	0.0000	0.0000	0.0000	0.0000	0.0000
NBP[1]1819*	0.0000	0.0000	0.0000	0.0000	0.0000	0.0000
NBP[1]1913*	0.0000	0.0000	0.0000	0.0000	0.0000	0.0000
Total	0.0000	1.0000	0.0000	1.0000	0.0000	1.0000

Material Stream: Pandhi-Gas

Fluid Package: Basis-1
Property Package: Peng-Robinson

CONDITIONS

		Overall	Vapour Phase	Liquid Phase	Aqueous Phase
Vapour / Phase Fraction		1.0000	1.0000	0.0000	0.0000
Temperature:	(F)	84.79	84.79	84.79	84.79
Pressure:	(psig)	445.0	445.0	445.0	445.0
Molar Flow	(MMSCFD)	5.381	5.381	0.0000	0.0000
Mass Flow	(tonne/d)	137.6	137.6	0.0000	0.0000
Std Ideal Liq Vol Flow	(barrel/day)	2403	2403	0.0000	0.0000
Molar Enthalpy	(kJ/kgmole)	-8.928e+004	-8.928e+004	-2.875e+005	-2.859e+005
Molar Entropy	(kJ/kgmole-C)	159.3	159.3	218.7	54.83
Heat Flow	(MMBtu/hr)	-22.68	-22.68	0.0000	0.0000
Liq Vol Flow @Std Cond	(barrel/day)	9.528e+005 *	9.528e+005	0.0000	0.0000

* Specified by user.

Material Stream: Pandhi-Gas (continued)

Fluid Package: Basis-1
Property Package: Peng-Robinson

PROPERTIES

	Overall	Vapour Phase	Liquid Phase	Aqueous Phase
Molecular Weight	21.39	21.39	126.4	18.03
Molar Density (kgmole/m3)	1.408	1.408	6.079	55.76
Mass Density (kg/m3)	30.10	30.10	768.1	1005
Act. Volume Flow (barrel/day)	2.874e+004	2.874e+004	0.0000	0.0000
Mass Enthalpy (kJ/kg)	-4175	-4175	-2275	-1.586e+004
Mass Entropy (kJ/kg-C)	7.448	7.448	1.731	3.042
Heat Capacity (kJ/kgmole-C)	47.13	47.13	253.8	77.64
Mass Heat Capacity (kJ/kg-C)	2.204	2.204	2.009	4.307
LHV Molar Basis (Std) (Btu/SCF)	---	---	---	1.809e-004
LHV Mass Basis (Std) (kJ/kg)	---	---	---	8.858e-003
Phase Fraction [Vol. Basis]	1.000	1.000	---	---
Phase Fraction [Mass Basis]	1.000	1.000	0.0000	0.0000
Partial Pressure of CO2 (psig)	0.9692	---	---	---
Cost Based on Flow (Cost/s)	0.0000	0.0000	0.0000	0.0000
Act. Gas Flow (ACT_m3/h)	190.4	190.4	---	---
Avg. Liq. Density (kgmole/m3)	16.84	16.84	5.980	55.35
Specific Heat (kJ/kgmole-C)	47.13	47.13	253.8	77.64
Std. Gas Flow (STD_m3/h)	6337	6337	0.0000	0.0000
Std. Ideal Liq. Mass Density (kg/m3)	360.1	360.1	755.6	997.8
Act. Liq. Flow (barrel/day)	0.0000	---	---	0.0000
Z Factor	---	0.8953	0.2073	2.260e-002
Watson K	17.28	17.28	11.99	8.497
User Property	---	---	---	---
Partial Pressure of H2S (psig)	-14.70	---	---	---
Cp/(Cp - R)	1.214	1.214	1.034	1.120
Cp/Cv	1.388	1.388	1.034	1.149
Heat of Vap. (kJ/kgmole)	1.879e+004	---	---	---
Kinematic Viscosity (cSt)	0.3993	0.3993	12.25	0.8047
Liq. Mass Density (Std. Cond) (kg/m3)	0.9081	0.9081	781.8	1015
Liq. Vol. Flow (Std. Cond) (barrel/day)	9.528e+005	9.528e+005	0.0000	0.0000
Liquid Fraction	0.0000	0.0000	1.000	1.000
Molar Volume (m3/kgmole)	0.7104	0.7104	0.1645	1.793e-002
Mass Heat of Vap. (kJ/kg)	878.6	---	---	---
Phase Fraction [Molar Basis]	1.0000	1.0000	0.0000	0.0000
Surface Tension (dyne/cm)	---	---	15.96	71.32
Thermal Conductivity (W/m-K)	3.302e-002	3.302e-002	0.1006	0.6173
Viscosity (cP)	1.202e-002	1.202e-002	9.409	0.8089
Cv (Semi-Ideal) (kJ/kgmole-C)	38.81	38.81	245.5	69.33
Mass Cv (Semi-Ideal) (kJ/kg-C)	1.815	1.815	1.943	3.846
Cv (kJ/kgmole-C)	33.96	33.96	245.5	67.56
Mass Cv (kJ/kg-C)	1.588	1.588	1.943	3.748
Cv (Ent. Method) (kJ/kgmole-C)	-508.4	-3697	---	66.88
Mass Cv (Ent. Method) (kJ/kg-C)	-23.77	-172.9	---	3.711
Cp/Cv (Ent. Method)	-9.270e-002	-1.275e-002	---	1.161
Reid VP at 37.8 C (psig)	---	---	97.87	---
True VP at 37.8 C (psig)	3607	3607	475.9	17.11
Liq. Vol. Flow - Sum(Std. Cond) (barrel/day)	9.528e+005	9.528e+005	0.0000	0.0000
HHV Molar Basis (Std) (Btu/SCF)	---	---	---	46.45
HHV Mass Basis (Std) (kJ/kg)	---	---	---	2274
CO2 Loading	---	---	---	---
CO2 App ML Con (kgmole/m3)	---	---	---	---
CO2 App WT Con (kgmol/kg)	---	---	---	---
Phase Fraction [Act. Vol. Basis]	1.000	1.000	0.0000	0.0000
Mass Exergy (kJ/kg)	387.1	---	---	---
Viscosity Index	-58.95	---	---	---
Ideal Gas Cp/Cv	1.249	1.249	1.043	1.329
Ideal Gas Cp (kJ/kgmole-C)	41.72	41.72	200.0	33.60

* Specified by user.

Material Stream: Pandhi-Gas (continued)

Fluid Package: Basis-1
Property Package: Peng-Robinson

PROPERTIES

	Overall	Vapour Phase	Liquid Phase	Aqueous Phase
Mass Ideal Gas Cp (kJ/kg-C)	1.951	1.951	1.583	1.864
Bubble Point Pressure (psig)	4658	---	---	---

COMPOSITION

Overall Phase

Vapour Fraction 1.0000

COMPONENTS	MOLAR FLOW (kgmole/h)	MOLE FRACTION	MASS FLOW (tonne/d)	MASS FRACTION	LIQUID VOLUME FLOW (m3/h)	LIQUID VOLUME FRACTION
Methane	205.0219	0.7649	78.9395	0.5738	10.9860	0.6901
Ethane	27.6541	0.1032	19.9573	0.1451	2.3379	0.1469
Propane	13.5902	0.0507	14.3829	0.1046	1.1828	0.0743
i-Butane	1.5866	0.0059	2.2133	0.0161	0.1641	0.0103
n-Butane	2.8841	0.0108	4.0233	0.0292	0.2874	0.0181
i-Pentane	0.4635	0.0017	0.8025	0.0058	0.0536	0.0034
n-Pentane	0.4652	0.0017	0.8056	0.0059	0.0533	0.0033
n-Hexane	0.3694	0.0014	0.7639	0.0056	0.0480	0.0030
Nitrogen	5.5752	0.0208	3.7483	0.0272	0.1937	0.0122
CO2	9.1335	0.0341	9.6471	0.0701	0.4870	0.0306
H2S	0.0005	0.0000	0.0004	0.0000	0.0000	0.0000
H2O	0.3945	0.0015	0.1706	0.0012	0.0071	0.0004
NBP[1]95*	0.1425	0.0005	0.2323	0.0017	0.0142	0.0009
NBP[1]121*	0.1318	0.0005	0.2305	0.0017	0.0139	0.0009
NBP[1]147*	0.1254	0.0005	0.2414	0.0018	0.0144	0.0009
NBP[1]171*	0.1733	0.0006	0.3646	0.0027	0.0213	0.0013
NBP[1]195*	0.1579	0.0006	0.3546	0.0026	0.0205	0.0013
NBP[1]222*	0.0732	0.0003	0.1768	0.0013	0.0101	0.0006
NBP[1]248*	0.0375	0.0001	0.0974	0.0007	0.0055	0.0003
NBP[1]273*	0.0181	0.0001	0.0503	0.0004	0.0028	0.0002
NBP[1]299*	0.0083	0.0000	0.0245	0.0002	0.0014	0.0001
NBP[1]325*	0.0033	0.0000	0.0105	0.0001	0.0006	0.0000
NBP[1]351*	0.0015	0.0000	0.0050	0.0000	0.0003	0.0000
NBP[1]377*	0.0007	0.0000	0.0025	0.0000	0.0001	0.0000
NBP[1]402*	0.0003	0.0000	0.0013	0.0000	0.0001	0.0000
NBP[1]428*	0.0002	0.0000	0.0007	0.0000	0.0000	0.0000
NBP[1]454*	0.0001	0.0000	0.0003	0.0000	0.0000	0.0000
NBP[1]480*	0.0000	0.0000	0.0002	0.0000	0.0000	0.0000
NBP[1]505*	0.0000	0.0000	0.0001	0.0000	0.0000	0.0000
NBP[1]531*	0.0000	0.0000	0.0000	0.0000	0.0000	0.0000
NBP[1]557*	0.0000	0.0000	0.0000	0.0000	0.0000	0.0000
NBP[1]582*	0.0000	0.0000	0.0000	0.0000	0.0000	0.0000
NBP[1]608*	0.0000	0.0000	0.0000	0.0000	0.0000	0.0000
NBP[1]634*	0.0000	0.0000	0.0000	0.0000	0.0000	0.0000
NBP[1]659*	0.0000	0.0000	0.0000	0.0000	0.0000	0.0000
NBP[1]685*	0.0000	0.0000	0.0000	0.0000	0.0000	0.0000
NBP[1]711*	0.0000	0.0000	0.0000	0.0000	0.0000	0.0000
NBP[1]736*	0.0000	0.0000	0.0000	0.0000	0.0000	0.0000
NBP[1]762*	0.0000	0.0000	0.0000	0.0000	0.0000	0.0000
NBP[1]788*	0.0000	0.0000	0.0000	0.0000	0.0000	0.0000
NBP[1]825*	0.0000	0.0000	0.0000	0.0000	0.0000	0.0000
NBP[1]873*	0.0000	0.0000	0.0000	0.0000	0.0000	0.0000
NBP[1]926*	0.0000	0.0000	0.0000	0.0000	0.0000	0.0000
NBP[1]978*	0.0000	0.0000	0.0000	0.0000	0.0000	0.0000
NBP[1]1021*	0.0000	0.0000	0.0000	0.0000	0.0000	0.0000
NBP[1]1075*	0.0000	0.0000	0.0000	0.0000	0.0000	0.0000
NBP[1]1123*	0.0000	0.0000	0.0000	0.0000	0.0000	0.0000
NBP[1]1173*	0.0000	0.0000	0.0000	0.0000	0.0000	0.0000
NBP[1]1250*	0.0000	0.0000	0.0000	0.0000	0.0000	0.0000

* Specified by user.

Material Stream: Pandhi-Gas (continued)

Fluid Package: Basis-1
Property Package: Peng-Robinson

COMPOSITION

Overall Phase (continued)

Vapour Fraction 1.0000

COMPONENTS	MOLAR FLOW (kgmole/h)	MOLE FRACTION	MASS FLOW (tonne/d)	MASS FRACTION	LIQUID VOLUME FLOW (m3/h)	LIQUID VOLUME FRACTION
NBP[1]1339*	0.0000	0.0000	0.0000	0.0000	0.0000	0.0000
NBP[1]1432*	0.0000	0.0000	0.0000	0.0000	0.0000	0.0000
NBP[1]1528*	0.0000	0.0000	0.0000	0.0000	0.0000	0.0000
NBP[1]1637*	0.0000	0.0000	0.0000	0.0000	0.0000	0.0000
NBP[1]1732*	0.0000	0.0000	0.0000	0.0000	0.0000	0.0000
NBP[1]1819*	0.0001	0.0000	0.0029	0.0000	0.0001	0.0000
NBP[1]1913*	0.0112	0.0000	0.3148	0.0023	0.0121	0.0008
Total	268.0242	1.0000	137.5655	1.0000	15.9186	1.0000

Vapour Phase

Phase Fraction 1.000

COMPONENTS	MOLAR FLOW (kgmole/h)	MOLE FRACTION	MASS FLOW (tonne/d)	MASS FRACTION	LIQUID VOLUME FLOW (m3/h)	LIQUID VOLUME FRACTION
Methane	205.0219	0.7649	78.9395	0.5738	10.9860	0.6901
Ethane	27.6541	0.1032	19.9573	0.1451	2.3379	0.1469
Propane	13.5902	0.0507	14.3829	0.1046	1.1828	0.0743
i-Butane	1.5866	0.0059	2.2133	0.0161	0.1641	0.0103
n-Butane	2.8841	0.0108	4.0233	0.0292	0.2874	0.0181
i-Pentane	0.4635	0.0017	0.8025	0.0058	0.0536	0.0034
n-Pentane	0.4652	0.0017	0.8056	0.0059	0.0533	0.0033
n-Hexane	0.3694	0.0014	0.7639	0.0056	0.0480	0.0030
Nitrogen	5.5752	0.0208	3.7483	0.0272	0.1937	0.0122
CO2	9.1335	0.0341	9.6471	0.0701	0.4870	0.0306
H2S	0.0005	0.0000	0.0004	0.0000	0.0000	0.0000
H2O	0.3945	0.0015	0.1706	0.0012	0.0071	0.0004
NBP[1]95*	0.1425	0.0005	0.2323	0.0017	0.0142	0.0009
NBP[1]121*	0.1318	0.0005	0.2305	0.0017	0.0139	0.0009
NBP[1]147*	0.1254	0.0005	0.2414	0.0018	0.0144	0.0009
NBP[1]171*	0.1733	0.0006	0.3646	0.0027	0.0213	0.0013
NBP[1]195*	0.1579	0.0006	0.3546	0.0026	0.0205	0.0013
NBP[1]222*	0.0732	0.0003	0.1768	0.0013	0.0101	0.0006
NBP[1]248*	0.0375	0.0001	0.0974	0.0007	0.0055	0.0003
NBP[1]273*	0.0181	0.0001	0.0503	0.0004	0.0028	0.0002
NBP[1]299*	0.0083	0.0000	0.0245	0.0002	0.0014	0.0001
NBP[1]325*	0.0033	0.0000	0.0105	0.0001	0.0006	0.0000
NBP[1]351*	0.0015	0.0000	0.0050	0.0000	0.0003	0.0000
NBP[1]377*	0.0007	0.0000	0.0025	0.0000	0.0001	0.0000
NBP[1]402*	0.0003	0.0000	0.0013	0.0000	0.0001	0.0000
NBP[1]428*	0.0002	0.0000	0.0007	0.0000	0.0000	0.0000
NBP[1]454*	0.0001	0.0000	0.0003	0.0000	0.0000	0.0000
NBP[1]480*	0.0000	0.0000	0.0002	0.0000	0.0000	0.0000
NBP[1]505*	0.0000	0.0000	0.0001	0.0000	0.0000	0.0000
NBP[1]531*	0.0000	0.0000	0.0000	0.0000	0.0000	0.0000
NBP[1]557*	0.0000	0.0000	0.0000	0.0000	0.0000	0.0000
NBP[1]582*	0.0000	0.0000	0.0000	0.0000	0.0000	0.0000
NBP[1]608*	0.0000	0.0000	0.0000	0.0000	0.0000	0.0000
NBP[1]634*	0.0000	0.0000	0.0000	0.0000	0.0000	0.0000
NBP[1]659*	0.0000	0.0000	0.0000	0.0000	0.0000	0.0000
NBP[1]685*	0.0000	0.0000	0.0000	0.0000	0.0000	0.0000
NBP[1]711*	0.0000	0.0000	0.0000	0.0000	0.0000	0.0000
NBP[1]736*	0.0000	0.0000	0.0000	0.0000	0.0000	0.0000
NBP[1]762*	0.0000	0.0000	0.0000	0.0000	0.0000	0.0000
NBP[1]788*	0.0000	0.0000	0.0000	0.0000	0.0000	0.0000
NBP[1]825*	0.0000	0.0000	0.0000	0.0000	0.0000	0.0000
NBP[1]873*	0.0000	0.0000	0.0000	0.0000	0.0000	0.0000

* Specified by user.

Material Stream: Pandhi-Gas (continued)

Fluid Package: Basis-1
Property Package: Peng-Robinson

COMPOSITION

Vapour Phase (continued)

Phase Fraction 1.000

COMPONENTS	MOLAR FLOW (kgmole/h)	MOLE FRACTION	MASS FLOW (tonne/d)	MASS FRACTION	LIQUID VOLUME FLOW (m3/h)	LIQUID VOLUME FRACTION
NBP[1]926*	0.0000	0.0000	0.0000	0.0000	0.0000	0.0000
NBP[1]978*	0.0000	0.0000	0.0000	0.0000	0.0000	0.0000
NBP[1]1021*	0.0000	0.0000	0.0000	0.0000	0.0000	0.0000
NBP[1]1075*	0.0000	0.0000	0.0000	0.0000	0.0000	0.0000
NBP[1]1123*	0.0000	0.0000	0.0000	0.0000	0.0000	0.0000
NBP[1]1173*	0.0000	0.0000	0.0000	0.0000	0.0000	0.0000
NBP[1]1250*	0.0000	0.0000	0.0000	0.0000	0.0000	0.0000
NBP[1]1339*	0.0000	0.0000	0.0000	0.0000	0.0000	0.0000
NBP[1]1432*	0.0000	0.0000	0.0000	0.0000	0.0000	0.0000
NBP[1]1528*	0.0000	0.0000	0.0000	0.0000	0.0000	0.0000
NBP[1]1637*	0.0000	0.0000	0.0000	0.0000	0.0000	0.0000
NBP[1]1732*	0.0000	0.0000	0.0000	0.0000	0.0000	0.0000
NBP[1]1819*	0.0001	0.0000	0.0029	0.0000	0.0001	0.0000
NBP[1]1913*	0.0112	0.0000	0.3148	0.0023	0.0121	0.0008
Total	268.0242	1.0000	137.5655	1.0000	15.9186	1.0000

Liquid Phase

Phase Fraction 0.0000

COMPONENTS	MOLAR FLOW (kgmole/h)	MOLE FRACTION	MASS FLOW (tonne/d)	MASS FRACTION	LIQUID VOLUME FLOW (m3/h)	LIQUID VOLUME FRACTION
Methane	0.0000	0.1136	0.0000	0.0144	0.0000	0.0364
Ethane	0.0000	0.0644	0.0000	0.0153	0.0000	0.0326
Propane	0.0000	0.0942	0.0000	0.0329	0.0000	0.0490
i-Butane	0.0000	0.0248	0.0000	0.0114	0.0000	0.0154
n-Butane	0.0000	0.0600	0.0000	0.0276	0.0000	0.0357
i-Pentane	0.0000	0.0217	0.0000	0.0124	0.0000	0.0150
n-Pentane	0.0000	0.0278	0.0000	0.0159	0.0000	0.0191
n-Hexane	0.0000	0.0618	0.0000	0.0422	0.0000	0.0481
Nitrogen	0.0000	0.0013	0.0000	0.0003	0.0000	0.0003
CO2	0.0000	0.0134	0.0000	0.0047	0.0000	0.0043
H2S	0.0000	0.0000	0.0000	0.0000	0.0000	0.0000
H2O	0.0000	0.0006	0.0000	0.0001	0.0000	0.0001
NBP[1]95*	0.0000	0.0082	0.0000	0.0044	0.0000	0.0049
NBP[1]121*	0.0000	0.0116	0.0000	0.0067	0.0000	0.0073
NBP[1]147*	0.0000	0.0172	0.0000	0.0109	0.0000	0.0118
NBP[1]171*	0.0000	0.0365	0.0000	0.0253	0.0000	0.0269
NBP[1]195*	0.0000	0.0516	0.0000	0.0382	0.0000	0.0401
NBP[1]222*	0.0000	0.0408	0.0000	0.0325	0.0000	0.0337
NBP[1]248*	0.0000	0.0353	0.0000	0.0302	0.0000	0.0309
NBP[1]273*	0.0000	0.0291	0.0000	0.0266	0.0000	0.0270
NBP[1]299*	0.0000	0.0230	0.0000	0.0225	0.0000	0.0225
NBP[1]325*	0.0000	0.0168	0.0000	0.0175	0.0000	0.0173
NBP[1]351*	0.0000	0.0137	0.0000	0.0151	0.0000	0.0148
NBP[1]377*	0.0000	0.0126	0.0000	0.0148	0.0000	0.0144
NBP[1]402*	0.0000	0.0116	0.0000	0.0145	0.0000	0.0139
NBP[1]428*	0.0000	0.0110	0.0000	0.0147	0.0000	0.0140
NBP[1]454*	0.0000	0.0110	0.0000	0.0157	0.0000	0.0148
NBP[1]480*	0.0000	0.0111	0.0000	0.0170	0.0000	0.0159
NBP[1]505*	0.0000	0.0108	0.0000	0.0176	0.0000	0.0162
NBP[1]531*	0.0000	0.0104	0.0000	0.0180	0.0000	0.0165
NBP[1]557*	0.0000	0.0100	0.0000	0.0185	0.0000	0.0168
NBP[1]582*	0.0000	0.0096	0.0000	0.0188	0.0000	0.0169
NBP[1]608*	0.0000	0.0092	0.0000	0.0192	0.0000	0.0171
NBP[1]634*	0.0000	0.0090	0.0000	0.0199	0.0000	0.0177
NBP[1]659*	0.0000	0.0089	0.0000	0.0207	0.0000	0.0182

* Specified by user.

Material Stream: Pandhi-Gas (continued)

Fluid Package: Basis-1
Property Package: Peng-Robinson

COMPOSITION

Liquid Phase (continued)

Phase Fraction 0.0000

COMPONENTS	MOLAR FLOW (kgmole/h)	MOLE FRACTION	MASS FLOW (tonne/d)	MASS FRACTION	LIQUID VOLUME FLOW (m3/h)	LIQUID VOLUME FRACTION
NBP[1]685*	0.0000	0.0092	0.0000	0.0227	0.0000	0.0198
NBP[1]711*	0.0000	0.0096	0.0000	0.0249	0.0000	0.0216
NBP[1]736*	0.0000	0.0095	0.0000	0.0258	0.0000	0.0221
NBP[1]762*	0.0000	0.0093	0.0000	0.0263	0.0000	0.0225
NBP[1]788*	0.0000	0.0089	0.0000	0.0267	0.0000	0.0226
NBP[1]825*	0.0000	0.0149	0.0000	0.0481	0.0000	0.0404
NBP[1]873*	0.0000	0.0103	0.0000	0.0359	0.0000	0.0298
NBP[1]926*	0.0000	0.0081	0.0000	0.0305	0.0000	0.0250
NBP[1]978*	0.0000	0.0083	0.0000	0.0343	0.0000	0.0277
NBP[1]1021*	0.0000	0.0041	0.0000	0.0179	0.0000	0.0143
NBP[1]1075*	0.0000	0.0025	0.0000	0.0117	0.0000	0.0093
NBP[1]1123*	0.0000	0.0023	0.0000	0.0116	0.0000	0.0091
NBP[1]1173*	0.0000	0.0017	0.0000	0.0088	0.0000	0.0069
NBP[1]1250*	0.0000	0.0022	0.0000	0.0125	0.0000	0.0096
NBP[1]1339*	0.0000	0.0020	0.0000	0.0130	0.0000	0.0098
NBP[1]1432*	0.0000	0.0014	0.0000	0.0100	0.0000	0.0074
NBP[1]1528*	0.0000	0.0010	0.0000	0.0076	0.0000	0.0055
NBP[1]1637*	0.0000	0.0007	0.0000	0.0056	0.0000	0.0041
NBP[1]1732*	0.0000	0.0006	0.0000	0.0048	0.0000	0.0034
NBP[1]1819*	0.0000	0.0005	0.0000	0.0047	0.0000	0.0034
NBP[1]1913*	0.0000	0.0000	0.0000	0.0000	0.0000	0.0000
Total	0.0000	1.0000	0.0000	1.0000	0.0000	1.0000

Aqueous Phase

Phase Fraction 0.0000

COMPONENTS	MOLAR FLOW (kgmole/h)	MOLE FRACTION	MASS FLOW (tonne/d)	MASS FRACTION	LIQUID VOLUME FLOW (m3/h)	LIQUID VOLUME FRACTION
Methane	0.0000	0.0000	0.0000	0.0000	0.0000	0.0000
Ethane	0.0000	0.0000	0.0000	0.0000	0.0000	0.0000
Propane	0.0000	0.0000	0.0000	0.0000	0.0000	0.0000
i-Butane	0.0000	0.0000	0.0000	0.0000	0.0000	0.0000
n-Butane	0.0000	0.0000	0.0000	0.0000	0.0000	0.0000
i-Pentane	0.0000	0.0000	0.0000	0.0000	0.0000	0.0000
n-Pentane	0.0000	0.0000	0.0000	0.0000	0.0000	0.0000
n-Hexane	0.0000	0.0000	0.0000	0.0000	0.0000	0.0000
Nitrogen	0.0000	0.0000	0.0000	0.0000	0.0000	0.0000
CO2	0.0000	0.0004	0.0000	0.0010	0.0000	0.0012
H2S	0.0000	0.0000	0.0000	0.0000	0.0000	0.0000
H2O	0.0000	0.9996	0.0000	0.9990	0.0000	0.9988
NBP[1]95*	0.0000	0.0000	0.0000	0.0000	0.0000	0.0000
NBP[1]121*	0.0000	0.0000	0.0000	0.0000	0.0000	0.0000
NBP[1]147*	0.0000	0.0000	0.0000	0.0000	0.0000	0.0000
NBP[1]171*	0.0000	0.0000	0.0000	0.0000	0.0000	0.0000
NBP[1]195*	0.0000	0.0000	0.0000	0.0000	0.0000	0.0000
NBP[1]222*	0.0000	0.0000	0.0000	0.0000	0.0000	0.0000
NBP[1]248*	0.0000	0.0000	0.0000	0.0000	0.0000	0.0000
NBP[1]273*	0.0000	0.0000	0.0000	0.0000	0.0000	0.0000
NBP[1]299*	0.0000	0.0000	0.0000	0.0000	0.0000	0.0000
NBP[1]325*	0.0000	0.0000	0.0000	0.0000	0.0000	0.0000
NBP[1]351*	0.0000	0.0000	0.0000	0.0000	0.0000	0.0000
NBP[1]377*	0.0000	0.0000	0.0000	0.0000	0.0000	0.0000
NBP[1]402*	0.0000	0.0000	0.0000	0.0000	0.0000	0.0000
NBP[1]428*	0.0000	0.0000	0.0000	0.0000	0.0000	0.0000
NBP[1]454*	0.0000	0.0000	0.0000	0.0000	0.0000	0.0000
NBP[1]480*	0.0000	0.0000	0.0000	0.0000	0.0000	0.0000

* Specified by user.

Material Stream: Pandhi-Gas (continued)

Fluid Package: Basis-1
Property Package: Peng-Robinson

COMPOSITION

Aqueous Phase (continued)

Phase Fraction 0.0000

COMPONENTS	MOLAR FLOW (kgmole/h)	MOLE FRACTION	MASS FLOW (tonne/d)	MASS FRACTION	LIQUID VOLUME FLOW (m3/h)	LIQUID VOLUME FRACTION
NBP[1]505*	0.0000	0.0000	0.0000	0.0000	0.0000	0.0000
NBP[1]531*	0.0000	0.0000	0.0000	0.0000	0.0000	0.0000
NBP[1]557*	0.0000	0.0000	0.0000	0.0000	0.0000	0.0000
NBP[1]582*	0.0000	0.0000	0.0000	0.0000	0.0000	0.0000
NBP[1]608*	0.0000	0.0000	0.0000	0.0000	0.0000	0.0000
NBP[1]634*	0.0000	0.0000	0.0000	0.0000	0.0000	0.0000
NBP[1]659*	0.0000	0.0000	0.0000	0.0000	0.0000	0.0000
NBP[1]685*	0.0000	0.0000	0.0000	0.0000	0.0000	0.0000
NBP[1]711*	0.0000	0.0000	0.0000	0.0000	0.0000	0.0000
NBP[1]736*	0.0000	0.0000	0.0000	0.0000	0.0000	0.0000
NBP[1]762*	0.0000	0.0000	0.0000	0.0000	0.0000	0.0000
NBP[1]788*	0.0000	0.0000	0.0000	0.0000	0.0000	0.0000
NBP[1]825*	0.0000	0.0000	0.0000	0.0000	0.0000	0.0000
NBP[1]873*	0.0000	0.0000	0.0000	0.0000	0.0000	0.0000
NBP[1]926*	0.0000	0.0000	0.0000	0.0000	0.0000	0.0000
NBP[1]978*	0.0000	0.0000	0.0000	0.0000	0.0000	0.0000
NBP[1]1021*	0.0000	0.0000	0.0000	0.0000	0.0000	0.0000
NBP[1]1075*	0.0000	0.0000	0.0000	0.0000	0.0000	0.0000
NBP[1]1123*	0.0000	0.0000	0.0000	0.0000	0.0000	0.0000
NBP[1]1173*	0.0000	0.0000	0.0000	0.0000	0.0000	0.0000
NBP[1]1250*	0.0000	0.0000	0.0000	0.0000	0.0000	0.0000
NBP[1]1339*	0.0000	0.0000	0.0000	0.0000	0.0000	0.0000
NBP[1]1432*	0.0000	0.0000	0.0000	0.0000	0.0000	0.0000
NBP[1]1528*	0.0000	0.0000	0.0000	0.0000	0.0000	0.0000
NBP[1]1637*	0.0000	0.0000	0.0000	0.0000	0.0000	0.0000
NBP[1]1732*	0.0000	0.0000	0.0000	0.0000	0.0000	0.0000
NBP[1]1819*	0.0000	0.0000	0.0000	0.0000	0.0000	0.0000
NBP[1]1913*	0.0000	0.0000	0.0000	0.0000	0.0000	0.0000
Total	0.0000	1.0000	0.0000	1.0000	0.0000	1.0000

Material Stream: Pandhi-W

Fluid Package: Basis-1
Property Package: Peng-Robinson

CONDITIONS

		Overall	Vapour Phase	Liquid Phase	Aqueous Phase
Vapour / Phase Fraction		0.0000	0.0000	0.0000	1.0000
Temperature:	(F)	84.79	84.79	84.79	84.79
Pressure:	(psig)	445.0	445.0	445.0	445.0
Molar Flow	(MMSCFD)	2.135	0.0000	0.0000	2.135
Mass Flow	(tonne/d)	46.00	0.0000	0.0000	46.00
Std Ideal Liq Vol Flow	(barrel/day)	290.0	0.0000	0.0000	290.0
Molar Enthalpy	(kJ/kgmole)	-2.859e+005	-8.928e+004	-2.875e+005	-2.859e+005
Molar Entropy	(kJ/kgmole-C)	54.83	159.3	218.7	54.83
Heat Flow	(MMBtu/hr)	-28.81	0.0000	0.0000	-28.81
Liq Vol Flow @Std Cond	(barrel/day)	285.1 *	0.0000	0.0000	285.1

PROPERTIES

		Overall	Vapour Phase	Liquid Phase	Aqueous Phase
Molecular Weight		18.03	21.39	126.4	18.03
Molar Density	(kgmole/m3)	55.76	1.408	6.079	55.76
Mass Density	(kg/m3)	1005	30.10	768.1	1005
Act. Volume Flow	(barrel/day)	287.9	0.0000	0.0000	287.9
Mass Enthalpy	(kJ/kg)	-1.586e+004	-4175	-2275	-1.586e+004
Mass Entropy	(kJ/kg-C)	3.042	7.448	1.731	3.042

* Specified by user.

Material Stream: Pandhi-W (continued)

Fluid Package: Basis-1
Property Package: Peng-Robinson

PROPERTIES

	Overall	Vapour Phase	Liquid Phase	Aqueous Phase
Heat Capacity (kJ/kgmole-C)	77.64	47.13	253.8	77.64
Mass Heat Capacity (kJ/kg-C)	4.307	2.204	2.009	4.307
LHV Molar Basis (Std) (Btu/SCF)	1.809e-004	---	---	1.809e-004
LHV Mass Basis (Std) (kJ/kg)	8.858e-003	---	---	8.858e-003
Phase Fraction [Vol. Basis]	---	---	---	1.000
Phase Fraction [Mass Basis]	0.0000	0.0000	0.0000	1.000
Partial Pressure of CO2 (psig)	-14.70	---	---	---
Cost Based on Flow (Cost/s)	0.0000	0.0000	0.0000	0.0000
Act. Gas Flow (ACT_m3/h)	---	---	---	---
Avg. Liq. Density (kgmole/m3)	55.35	16.84	5.980	55.35
Specific Heat (kJ/kgmole-C)	77.64	47.13	253.8	77.64
Std. Gas Flow (STD_m3/h)	2514	0.0000	0.0000	2514
Std. Ideal Liq. Mass Density (kg/m3)	997.8	360.1	755.6	997.8
Act. Liq. Flow (barrel/day)	287.9	---	---	287.9
Z Factor	---	0.8953	0.2073	2.260e-002
Watson K	8.497	17.28	11.99	8.497
User Property	---	---	---	---
Partial Pressure of H2S (psig)	-14.70	---	---	---
Cp/(Cp - R)	1.120	1.214	1.034	1.120
Cp/Cv	1.149	1.388	1.034	1.149
Heat of Vap. (kJ/kgmole)	3.304e+004	---	---	---
Kinematic Viscosity (cSt)	0.8047	0.3993	12.25	0.8047
Liq. Mass Density (Std. Cond) (kg/m3)	1015	0.9081	781.8	1015
Liq. Vol. Flow (Std. Cond) (barrel/day)	285.1	0.0000	0.0000	285.1
Liquid Fraction	1.000	0.0000	1.000	1.000
Molar Volume (m3/kgmole)	1.793e-002	0.7104	0.1645	1.793e-002
Mass Heat of Vap. (kJ/kg)	1833	---	---	---
Phase Fraction [Molar Basis]	0.0000	0.0000	0.0000	1.0000
Surface Tension (dyne/cm)	71.32	---	15.96	71.32
Thermal Conductivity (W/m-K)	0.6173	3.302e-002	0.1006	0.6173
Viscosity (cP)	0.8089	1.202e-002	9.409	0.8089
Cv (Semi-Ideal) (kJ/kgmole-C)	69.33	38.81	245.5	69.33
Mass Cv (Semi-Ideal) (kJ/kg-C)	3.846	1.815	1.943	3.846
Cv (kJ/kgmole-C)	67.56	33.96	245.5	67.56
Mass Cv (kJ/kg-C)	3.748	1.588	1.943	3.748
Cv (Ent. Method) (kJ/kgmole-C)	66.88	-3697	---	66.88
Mass Cv (Ent. Method) (kJ/kg-C)	3.711	-172.9	---	3.711
Cp/Cv (Ent. Method)	1.161	-1.275e-002	---	1.161
Reid VP at 37.8 C (psig)	---	---	97.87	---
True VP at 37.8 C (psig)	17.11	3607	475.9	17.11
Liq. Vol. Flow - Sum(Std. Cond) (barrel/day)	285.1	0.0000	0.0000	285.1
HHV Molar Basis (Std) (Btu/SCF)	46.45	---	---	46.45
HHV Mass Basis (Std) (kJ/kg)	2274	---	---	2274
CO2 Loading	---	---	---	---
CO2 App ML Con (kgmole/m3)	2.216e-002	---	---	2.216e-002
CO2 App WT Con (kgmol/kg)	2.204e-005	---	---	2.204e-005
Phase Fraction [Act. Vol. Basis]	0.0000	0.0000	0.0000	1.000
Mass Exergy (kJ/kg)	3.750	---	---	---
Viscosity Index	9.106e-002	---	---	---
Ideal Gas Cp/Cv	1.329	1.249	1.043	1.329
Ideal Gas Cp (kJ/kgmole-C)	33.60	41.72	200.0	33.60
Mass Ideal Gas Cp (kJ/kg-C)	1.864	1.951	1.583	1.864
Bubble Point Pressure (psig)	12.46	---	---	---

* Specified by user.

Material Stream: Pandhi-W (continued)

Fluid Package: Basis-1
Property Package: Peng-Robinson

COMPOSITION

Overall Phase

Vapour Fraction 0.0000

COMPONENTS	MOLAR FLOW (kgmole/h)	MOLE FRACTION	MASS FLOW (tonne/d)	MASS FRACTION	LIQUID VOLUME FLOW (m3/h)	LIQUID VOLUME FRACTION
Methane	0.0000	0.0000	0.0000	0.0000	0.0000	0.0000
Ethane	0.0000	0.0000	0.0000	0.0000	0.0000	0.0000
Propane	0.0000	0.0000	0.0000	0.0000	0.0000	0.0000
i-Butane	0.0000	0.0000	0.0000	0.0000	0.0000	0.0000
n-Butane	0.0000	0.0000	0.0000	0.0000	0.0000	0.0000
i-Pentane	0.0000	0.0000	0.0000	0.0000	0.0000	0.0000
n-Pentane	0.0000	0.0000	0.0000	0.0000	0.0000	0.0000
n-Hexane	0.0000	0.0000	0.0000	0.0000	0.0000	0.0000
Nitrogen	0.0008	0.0000	0.0006	0.0000	0.0000	0.0000
CO2	0.0423	0.0004	0.0446	0.0010	0.0023	0.0012
H2S	0.0000	0.0000	0.0000	0.0000	0.0000	0.0000
H2O	106.2938	0.9996	45.9575	0.9990	1.9188	0.9988
NBP[1]95*	0.0000	0.0000	0.0000	0.0000	0.0000	0.0000
NBP[1]121*	0.0000	0.0000	0.0000	0.0000	0.0000	0.0000
NBP[1]147*	0.0000	0.0000	0.0000	0.0000	0.0000	0.0000
NBP[1]171*	0.0000	0.0000	0.0000	0.0000	0.0000	0.0000
NBP[1]195*	0.0000	0.0000	0.0000	0.0000	0.0000	0.0000
NBP[1]222*	0.0000	0.0000	0.0000	0.0000	0.0000	0.0000
NBP[1]248*	0.0000	0.0000	0.0000	0.0000	0.0000	0.0000
NBP[1]273*	0.0000	0.0000	0.0000	0.0000	0.0000	0.0000
NBP[1]299*	0.0000	0.0000	0.0000	0.0000	0.0000	0.0000
NBP[1]325*	0.0000	0.0000	0.0000	0.0000	0.0000	0.0000
NBP[1]351*	0.0000	0.0000	0.0000	0.0000	0.0000	0.0000
NBP[1]377*	0.0000	0.0000	0.0000	0.0000	0.0000	0.0000
NBP[1]402*	0.0000	0.0000	0.0000	0.0000	0.0000	0.0000
NBP[1]428*	0.0000	0.0000	0.0000	0.0000	0.0000	0.0000
NBP[1]454*	0.0000	0.0000	0.0000	0.0000	0.0000	0.0000
NBP[1]480*	0.0000	0.0000	0.0000	0.0000	0.0000	0.0000
NBP[1]505*	0.0000	0.0000	0.0000	0.0000	0.0000	0.0000
NBP[1]531*	0.0000	0.0000	0.0000	0.0000	0.0000	0.0000
NBP[1]557*	0.0000	0.0000	0.0000	0.0000	0.0000	0.0000
NBP[1]582*	0.0000	0.0000	0.0000	0.0000	0.0000	0.0000
NBP[1]608*	0.0000	0.0000	0.0000	0.0000	0.0000	0.0000
NBP[1]634*	0.0000	0.0000	0.0000	0.0000	0.0000	0.0000
NBP[1]659*	0.0000	0.0000	0.0000	0.0000	0.0000	0.0000
NBP[1]685*	0.0000	0.0000	0.0000	0.0000	0.0000	0.0000
NBP[1]711*	0.0000	0.0000	0.0000	0.0000	0.0000	0.0000
NBP[1]736*	0.0000	0.0000	0.0000	0.0000	0.0000	0.0000
NBP[1]762*	0.0000	0.0000	0.0000	0.0000	0.0000	0.0000
NBP[1]788*	0.0000	0.0000	0.0000	0.0000	0.0000	0.0000
NBP[1]825*	0.0000	0.0000	0.0000	0.0000	0.0000	0.0000
NBP[1]873*	0.0000	0.0000	0.0000	0.0000	0.0000	0.0000
NBP[1]926*	0.0000	0.0000	0.0000	0.0000	0.0000	0.0000
NBP[1]978*	0.0000	0.0000	0.0000	0.0000	0.0000	0.0000
NBP[1]1021*	0.0000	0.0000	0.0000	0.0000	0.0000	0.0000
NBP[1]1075*	0.0000	0.0000	0.0000	0.0000	0.0000	0.0000
NBP[1]1123*	0.0000	0.0000	0.0000	0.0000	0.0000	0.0000
NBP[1]1173*	0.0000	0.0000	0.0000	0.0000	0.0000	0.0000
NBP[1]1250*	0.0000	0.0000	0.0000	0.0000	0.0000	0.0000
NBP[1]1339*	0.0000	0.0000	0.0000	0.0000	0.0000	0.0000
NBP[1]1432*	0.0000	0.0000	0.0000	0.0000	0.0000	0.0000
NBP[1]1528*	0.0000	0.0000	0.0000	0.0000	0.0000	0.0000
NBP[1]1637*	0.0000	0.0000	0.0000	0.0000	0.0000	0.0000
NBP[1]1732*	0.0000	0.0000	0.0000	0.0000	0.0000	0.0000

* Specified by user.

Material Stream: Pandhi-W (continued)

Fluid Package: Basis-1
Property Package: Peng-Robinson

COMPOSITION

Overall Phase (continued)

Vapour Fraction 0.0000

COMPONENTS	MOLAR FLOW (kgmole/h)	MOLE FRACTION	MASS FLOW (tonne/d)	MASS FRACTION	LIQUID VOLUME FLOW (m3/h)	LIQUID VOLUME FRACTION
NBP[1]1819*	0.0000	0.0000	0.0000	0.0000	0.0000	0.0000
NBP[1]1913*	0.0000	0.0000	0.0000	0.0000	0.0000	0.0000
Total	106.3369	1.0000	46.0026	1.0000	1.9210	1.0000

Vapour Phase

Phase Fraction 0.0000

COMPONENTS	MOLAR FLOW (kgmole/h)	MOLE FRACTION	MASS FLOW (tonne/d)	MASS FRACTION	LIQUID VOLUME FLOW (m3/h)	LIQUID VOLUME FRACTION
Methane	0.0000	0.7649	0.0000	0.5738	0.0000	0.6901
Ethane	0.0000	0.1032	0.0000	0.1451	0.0000	0.1469
Propane	0.0000	0.0507	0.0000	0.1046	0.0000	0.0743
i-Butane	0.0000	0.0059	0.0000	0.0161	0.0000	0.0103
n-Butane	0.0000	0.0108	0.0000	0.0292	0.0000	0.0181
i-Pentane	0.0000	0.0017	0.0000	0.0058	0.0000	0.0034
n-Pentane	0.0000	0.0017	0.0000	0.0059	0.0000	0.0033
n-Hexane	0.0000	0.0014	0.0000	0.0056	0.0000	0.0030
Nitrogen	0.0000	0.0208	0.0000	0.0272	0.0000	0.0122
CO2	0.0000	0.0341	0.0000	0.0701	0.0000	0.0306
H2S	0.0000	0.0000	0.0000	0.0000	0.0000	0.0000
H2O	0.0000	0.0015	0.0000	0.0012	0.0000	0.0004
NBP[1]95*	0.0000	0.0005	0.0000	0.0017	0.0000	0.0009
NBP[1]121*	0.0000	0.0005	0.0000	0.0017	0.0000	0.0009
NBP[1]147*	0.0000	0.0005	0.0000	0.0018	0.0000	0.0009
NBP[1]171*	0.0000	0.0006	0.0000	0.0027	0.0000	0.0013
NBP[1]195*	0.0000	0.0006	0.0000	0.0026	0.0000	0.0013
NBP[1]222*	0.0000	0.0003	0.0000	0.0013	0.0000	0.0006
NBP[1]248*	0.0000	0.0001	0.0000	0.0007	0.0000	0.0003
NBP[1]273*	0.0000	0.0001	0.0000	0.0004	0.0000	0.0002
NBP[1]299*	0.0000	0.0000	0.0000	0.0002	0.0000	0.0001
NBP[1]325*	0.0000	0.0000	0.0000	0.0001	0.0000	0.0000
NBP[1]351*	0.0000	0.0000	0.0000	0.0000	0.0000	0.0000
NBP[1]377*	0.0000	0.0000	0.0000	0.0000	0.0000	0.0000
NBP[1]402*	0.0000	0.0000	0.0000	0.0000	0.0000	0.0000
NBP[1]428*	0.0000	0.0000	0.0000	0.0000	0.0000	0.0000
NBP[1]454*	0.0000	0.0000	0.0000	0.0000	0.0000	0.0000
NBP[1]480*	0.0000	0.0000	0.0000	0.0000	0.0000	0.0000
NBP[1]505*	0.0000	0.0000	0.0000	0.0000	0.0000	0.0000
NBP[1]531*	0.0000	0.0000	0.0000	0.0000	0.0000	0.0000
NBP[1]557*	0.0000	0.0000	0.0000	0.0000	0.0000	0.0000
NBP[1]582*	0.0000	0.0000	0.0000	0.0000	0.0000	0.0000
NBP[1]608*	0.0000	0.0000	0.0000	0.0000	0.0000	0.0000
NBP[1]634*	0.0000	0.0000	0.0000	0.0000	0.0000	0.0000
NBP[1]659*	0.0000	0.0000	0.0000	0.0000	0.0000	0.0000
NBP[1]685*	0.0000	0.0000	0.0000	0.0000	0.0000	0.0000
NBP[1]711*	0.0000	0.0000	0.0000	0.0000	0.0000	0.0000
NBP[1]736*	0.0000	0.0000	0.0000	0.0000	0.0000	0.0000
NBP[1]762*	0.0000	0.0000	0.0000	0.0000	0.0000	0.0000
NBP[1]788*	0.0000	0.0000	0.0000	0.0000	0.0000	0.0000
NBP[1]825*	0.0000	0.0000	0.0000	0.0000	0.0000	0.0000
NBP[1]873*	0.0000	0.0000	0.0000	0.0000	0.0000	0.0000
NBP[1]926*	0.0000	0.0000	0.0000	0.0000	0.0000	0.0000
NBP[1]978*	0.0000	0.0000	0.0000	0.0000	0.0000	0.0000
NBP[1]1021*	0.0000	0.0000	0.0000	0.0000	0.0000	0.0000
NBP[1]1075*	0.0000	0.0000	0.0000	0.0000	0.0000	0.0000
NBP[1]1123*	0.0000	0.0000	0.0000	0.0000	0.0000	0.0000

* Specified by user.

Material Stream: Pandhi-W (continued)

Fluid Package: Basis-1
Property Package: Peng-Robinson

COMPOSITION

Vapour Phase (continued)

Phase Fraction 0.0000

COMPONENTS	MOLAR FLOW (kgmole/h)	MOLE FRACTION	MASS FLOW (tonne/d)	MASS FRACTION	LIQUID VOLUME FLOW (m3/h)	LIQUID VOLUME FRACTION
NBP[1]1173*	0.0000	0.0000	0.0000	0.0000	0.0000	0.0000
NBP[1]1250*	0.0000	0.0000	0.0000	0.0000	0.0000	0.0000
NBP[1]1339*	0.0000	0.0000	0.0000	0.0000	0.0000	0.0000
NBP[1]1432*	0.0000	0.0000	0.0000	0.0000	0.0000	0.0000
NBP[1]1528*	0.0000	0.0000	0.0000	0.0000	0.0000	0.0000
NBP[1]1637*	0.0000	0.0000	0.0000	0.0000	0.0000	0.0000
NBP[1]1732*	0.0000	0.0000	0.0000	0.0000	0.0000	0.0000
NBP[1]1819*	0.0000	0.0000	0.0000	0.0000	0.0000	0.0000
NBP[1]1913*	0.0000	0.0000	0.0000	0.0023	0.0000	0.0008
Total	0.0000	1.0000	0.0000	1.0000	0.0000	1.0000

Liquid Phase

Phase Fraction 0.0000

COMPONENTS	MOLAR FLOW (kgmole/h)	MOLE FRACTION	MASS FLOW (tonne/d)	MASS FRACTION	LIQUID VOLUME FLOW (m3/h)	LIQUID VOLUME FRACTION
Methane	0.0000	0.1136	0.0000	0.0144	0.0000	0.0364
Ethane	0.0000	0.0644	0.0000	0.0153	0.0000	0.0326
Propane	0.0000	0.0942	0.0000	0.0329	0.0000	0.0490
i-Butane	0.0000	0.0248	0.0000	0.0114	0.0000	0.0154
n-Butane	0.0000	0.0600	0.0000	0.0276	0.0000	0.0357
i-Pentane	0.0000	0.0217	0.0000	0.0124	0.0000	0.0150
n-Pentane	0.0000	0.0278	0.0000	0.0159	0.0000	0.0191
n-Hexane	0.0000	0.0618	0.0000	0.0422	0.0000	0.0481
Nitrogen	0.0000	0.0013	0.0000	0.0003	0.0000	0.0003
CO2	0.0000	0.0134	0.0000	0.0047	0.0000	0.0043
H2S	0.0000	0.0000	0.0000	0.0000	0.0000	0.0000
H2O	0.0000	0.0006	0.0000	0.0001	0.0000	0.0001
NBP[1]95*	0.0000	0.0082	0.0000	0.0044	0.0000	0.0049
NBP[1]121*	0.0000	0.0116	0.0000	0.0067	0.0000	0.0073
NBP[1]147*	0.0000	0.0172	0.0000	0.0109	0.0000	0.0118
NBP[1]171*	0.0000	0.0365	0.0000	0.0253	0.0000	0.0269
NBP[1]195*	0.0000	0.0516	0.0000	0.0382	0.0000	0.0401
NBP[1]222*	0.0000	0.0408	0.0000	0.0325	0.0000	0.0337
NBP[1]248*	0.0000	0.0353	0.0000	0.0302	0.0000	0.0309
NBP[1]273*	0.0000	0.0291	0.0000	0.0266	0.0000	0.0270
NBP[1]299*	0.0000	0.0230	0.0000	0.0225	0.0000	0.0225
NBP[1]325*	0.0000	0.0168	0.0000	0.0175	0.0000	0.0173
NBP[1]351*	0.0000	0.0137	0.0000	0.0151	0.0000	0.0148
NBP[1]377*	0.0000	0.0126	0.0000	0.0148	0.0000	0.0144
NBP[1]402*	0.0000	0.0116	0.0000	0.0145	0.0000	0.0139
NBP[1]428*	0.0000	0.0110	0.0000	0.0147	0.0000	0.0140
NBP[1]454*	0.0000	0.0110	0.0000	0.0157	0.0000	0.0148
NBP[1]480*	0.0000	0.0111	0.0000	0.0170	0.0000	0.0159
NBP[1]505*	0.0000	0.0108	0.0000	0.0176	0.0000	0.0162
NBP[1]531*	0.0000	0.0104	0.0000	0.0180	0.0000	0.0165
NBP[1]557*	0.0000	0.0100	0.0000	0.0185	0.0000	0.0168
NBP[1]582*	0.0000	0.0096	0.0000	0.0188	0.0000	0.0169
NBP[1]608*	0.0000	0.0092	0.0000	0.0192	0.0000	0.0171
NBP[1]634*	0.0000	0.0090	0.0000	0.0199	0.0000	0.0177
NBP[1]659*	0.0000	0.0089	0.0000	0.0207	0.0000	0.0182
NBP[1]685*	0.0000	0.0092	0.0000	0.0227	0.0000	0.0198
NBP[1]711*	0.0000	0.0096	0.0000	0.0249	0.0000	0.0216
NBP[1]736*	0.0000	0.0095	0.0000	0.0258	0.0000	0.0221
NBP[1]762*	0.0000	0.0093	0.0000	0.0263	0.0000	0.0225
NBP[1]788*	0.0000	0.0089	0.0000	0.0267	0.0000	0.0226

* Specified by user.

Material Stream: Pandhi-W (continued)

Fluid Package: Basis-1
Property Package: Peng-Robinson

COMPOSITION

Liquid Phase (continued)

Phase Fraction 0.0000

COMPONENTS	MOLAR FLOW (kgmole/h)	MOLE FRACTION	MASS FLOW (tonne/d)	MASS FRACTION	LIQUID VOLUME FLOW (m3/h)	LIQUID VOLUME FRACTION
NBP[1]825*	0.0000	0.0149	0.0000	0.0481	0.0000	0.0404
NBP[1]873*	0.0000	0.0103	0.0000	0.0359	0.0000	0.0298
NBP[1]926*	0.0000	0.0081	0.0000	0.0305	0.0000	0.0250
NBP[1]978*	0.0000	0.0083	0.0000	0.0343	0.0000	0.0277
NBP[1]1021*	0.0000	0.0041	0.0000	0.0179	0.0000	0.0143
NBP[1]1075*	0.0000	0.0025	0.0000	0.0117	0.0000	0.0093
NBP[1]1123*	0.0000	0.0023	0.0000	0.0116	0.0000	0.0091
NBP[1]1173*	0.0000	0.0017	0.0000	0.0088	0.0000	0.0069
NBP[1]1250*	0.0000	0.0022	0.0000	0.0125	0.0000	0.0096
NBP[1]1339*	0.0000	0.0020	0.0000	0.0130	0.0000	0.0098
NBP[1]1432*	0.0000	0.0014	0.0000	0.0100	0.0000	0.0074
NBP[1]1528*	0.0000	0.0010	0.0000	0.0076	0.0000	0.0055
NBP[1]1637*	0.0000	0.0007	0.0000	0.0056	0.0000	0.0041
NBP[1]1732*	0.0000	0.0006	0.0000	0.0048	0.0000	0.0034
NBP[1]1819*	0.0000	0.0005	0.0000	0.0047	0.0000	0.0034
NBP[1]1913*	0.0000	0.0000	0.0000	0.0000	0.0000	0.0000
Total	0.0000	1.0000	0.0000	1.0000	0.0000	1.0000

Aqueous Phase

Phase Fraction 1.000

COMPONENTS	MOLAR FLOW (kgmole/h)	MOLE FRACTION	MASS FLOW (tonne/d)	MASS FRACTION	LIQUID VOLUME FLOW (m3/h)	LIQUID VOLUME FRACTION
Methane	0.0000	0.0000	0.0000	0.0000	0.0000	0.0000
Ethane	0.0000	0.0000	0.0000	0.0000	0.0000	0.0000
Propane	0.0000	0.0000	0.0000	0.0000	0.0000	0.0000
i-Butane	0.0000	0.0000	0.0000	0.0000	0.0000	0.0000
n-Butane	0.0000	0.0000	0.0000	0.0000	0.0000	0.0000
i-Pentane	0.0000	0.0000	0.0000	0.0000	0.0000	0.0000
n-Pentane	0.0000	0.0000	0.0000	0.0000	0.0000	0.0000
n-Hexane	0.0000	0.0000	0.0000	0.0000	0.0000	0.0000
Nitrogen	0.0008	0.0000	0.0006	0.0000	0.0000	0.0000
CO2	0.0423	0.0004	0.0446	0.0010	0.0023	0.0012
H2S	0.0000	0.0000	0.0000	0.0000	0.0000	0.0000
H2O	106.2938	0.9996	45.9575	0.9990	1.9188	0.9988
NBP[1]95*	0.0000	0.0000	0.0000	0.0000	0.0000	0.0000
NBP[1]121*	0.0000	0.0000	0.0000	0.0000	0.0000	0.0000
NBP[1]147*	0.0000	0.0000	0.0000	0.0000	0.0000	0.0000
NBP[1]171*	0.0000	0.0000	0.0000	0.0000	0.0000	0.0000
NBP[1]195*	0.0000	0.0000	0.0000	0.0000	0.0000	0.0000
NBP[1]222*	0.0000	0.0000	0.0000	0.0000	0.0000	0.0000
NBP[1]248*	0.0000	0.0000	0.0000	0.0000	0.0000	0.0000
NBP[1]273*	0.0000	0.0000	0.0000	0.0000	0.0000	0.0000
NBP[1]299*	0.0000	0.0000	0.0000	0.0000	0.0000	0.0000
NBP[1]325*	0.0000	0.0000	0.0000	0.0000	0.0000	0.0000
NBP[1]351*	0.0000	0.0000	0.0000	0.0000	0.0000	0.0000
NBP[1]377*	0.0000	0.0000	0.0000	0.0000	0.0000	0.0000
NBP[1]402*	0.0000	0.0000	0.0000	0.0000	0.0000	0.0000
NBP[1]428*	0.0000	0.0000	0.0000	0.0000	0.0000	0.0000
NBP[1]454*	0.0000	0.0000	0.0000	0.0000	0.0000	0.0000
NBP[1]480*	0.0000	0.0000	0.0000	0.0000	0.0000	0.0000
NBP[1]505*	0.0000	0.0000	0.0000	0.0000	0.0000	0.0000
NBP[1]531*	0.0000	0.0000	0.0000	0.0000	0.0000	0.0000
NBP[1]557*	0.0000	0.0000	0.0000	0.0000	0.0000	0.0000
NBP[1]582*	0.0000	0.0000	0.0000	0.0000	0.0000	0.0000
NBP[1]608*	0.0000	0.0000	0.0000	0.0000	0.0000	0.0000

* Specified by user.

Material Stream: Pandhi-W (continued)

Fluid Package: Basis-1
Property Package: Peng-Robinson

COMPOSITION

Aqueous Phase (continued)

Phase Fraction 1.000

COMPONENTS	MOLAR FLOW (kgmole/h)	MOLE FRACTION	MASS FLOW (tonne/d)	MASS FRACTION	LIQUID VOLUME FLOW (m3/h)	LIQUID VOLUME FRACTION
NBP[1]634*	0.0000	0.0000	0.0000	0.0000	0.0000	0.0000
NBP[1]659*	0.0000	0.0000	0.0000	0.0000	0.0000	0.0000
NBP[1]685*	0.0000	0.0000	0.0000	0.0000	0.0000	0.0000
NBP[1]711*	0.0000	0.0000	0.0000	0.0000	0.0000	0.0000
NBP[1]736*	0.0000	0.0000	0.0000	0.0000	0.0000	0.0000
NBP[1]762*	0.0000	0.0000	0.0000	0.0000	0.0000	0.0000
NBP[1]788*	0.0000	0.0000	0.0000	0.0000	0.0000	0.0000
NBP[1]825*	0.0000	0.0000	0.0000	0.0000	0.0000	0.0000
NBP[1]873*	0.0000	0.0000	0.0000	0.0000	0.0000	0.0000
NBP[1]926*	0.0000	0.0000	0.0000	0.0000	0.0000	0.0000
NBP[1]978*	0.0000	0.0000	0.0000	0.0000	0.0000	0.0000
NBP[1]1021*	0.0000	0.0000	0.0000	0.0000	0.0000	0.0000
NBP[1]1075*	0.0000	0.0000	0.0000	0.0000	0.0000	0.0000
NBP[1]1123*	0.0000	0.0000	0.0000	0.0000	0.0000	0.0000
NBP[1]1173*	0.0000	0.0000	0.0000	0.0000	0.0000	0.0000
NBP[1]1250*	0.0000	0.0000	0.0000	0.0000	0.0000	0.0000
NBP[1]1339*	0.0000	0.0000	0.0000	0.0000	0.0000	0.0000
NBP[1]1432*	0.0000	0.0000	0.0000	0.0000	0.0000	0.0000
NBP[1]1528*	0.0000	0.0000	0.0000	0.0000	0.0000	0.0000
NBP[1]1637*	0.0000	0.0000	0.0000	0.0000	0.0000	0.0000
NBP[1]1732*	0.0000	0.0000	0.0000	0.0000	0.0000	0.0000
NBP[1]1819*	0.0000	0.0000	0.0000	0.0000	0.0000	0.0000
NBP[1]1913*	0.0000	0.0000	0.0000	0.0000	0.0000	0.0000
Total	106.3369	1.0000	46.0026	1.0000	1.9210	1.0000

Material Stream: Pandhi-Water

Fluid Package: Basis-1
Property Package: Peng-Robinson

CONDITIONS

		Overall	Vapour Phase	Liquid Phase	Aqueous Phase
Vapour / Phase Fraction		0.0000	0.0000	0.0000	1.0000
Temperature:	(F)	134.9	134.9	134.9	134.9
Pressure:	(psig)	1235	1235	1235	1235
Molar Flow	(MMSCFD)	2.128	0.0000	0.0000	2.128
Mass Flow	(tonne/d)	45.85	0.0000	0.0000	45.85
Std Ideal Liq Vol Flow	(barrel/day)	289.1	0.0000	0.0000	289.1
Molar Enthalpy	(kJ/kgmole)	-2.836e+005	-9.012e+004	-2.579e+005	-2.836e+005
Molar Entropy	(kJ/kgmole-C)	61.60	152.4	238.0	61.60
Heat Flow	(MMBtu/hr)	-28.49	0.0000	0.0000	-28.49
Liq Vol Flow @Std Cond	(barrel/day)	284.1 *	0.0000	0.0000	284.1

PROPERTIES

		Overall	Vapour Phase	Liquid Phase	Aqueous Phase
Molecular Weight		18.03	21.93	112.5	18.03
Molar Density	(kgmole/m3)	54.68	3.882	6.446	54.68
Mass Density	(kg/m3)	985.8	85.13	725.0	985.8
Act. Volume Flow	(barrel/day)	292.6	0.0000	0.0000	292.6
Mass Enthalpy	(kJ/kg)	-1.573e+004	-4110	-2293	-1.573e+004
Mass Entropy	(kJ/kg-C)	3.416	6.950	2.116	3.416
Heat Capacity	(kJ/kgmole-C)	77.73	58.84	242.5	77.73
Mass Heat Capacity	(kJ/kg-C)	4.311	2.683	2.157	4.311
LHV Molar Basis (Std)	(Btu/SCF)	1.593e-003	---	---	1.593e-003
LHV Mass Basis (Std)	(kJ/kg)	7.799e-002	---	---	7.799e-002
Phase Fraction [Vol. Basis]		---	---	---	1.000

* Specified by user.

Material Stream: Pandhi-Water (continued)

Fluid Package: Basis-1
Property Package: Peng-Robinson

PROPERTIES

	Overall	Vapour Phase	Liquid Phase	Aqueous Phase
Phase Fraction [Mass Basis]	0.0000	0.0000	0.0000	1.000
Partial Pressure of CO2 (psig)	-14.70	---	---	---
Cost Based on Flow (Cost/s)	0.0000	0.0000	0.0000	0.0000
Act. Gas Flow (ACT_m3/h)	---	---	---	---
Avg. Liq. Density (kgmole/m3)	55.34	16.70	6.535	55.34
Specific Heat (kJ/kgmole-C)	77.73	58.84	242.5	77.73
Std. Gas Flow (STD_m3/h)	2506	0.0000	0.0000	2506
Std. Ideal Liq. Mass Density (kg/m3)	997.7	366.1	735.0	997.7
Act. Liq. Flow (barrel/day)	292.6	---	---	292.6
Z Factor	---	0.8082	0.4867	5.738e-002
Watson K	8.494	17.09	12.04	8.494
User Property	---	---	---	---
Partial Pressure of H2S (psig)	-14.70	---	---	---
Cp/(Cp - R)	1.120	1.165	1.035	1.120
Cp/Cv	1.160	1.571	1.247	1.160
Heat of Vap. (kJ/kgmole)	2.630e+004	---	---	---
Kinematic Viscosity (cSt)	0.4910	0.1772	5.420	0.4910
Liq. Mass Density (Std. Cond) (kg/m3)	1015	0.9313	767.6	1015
Liq. Vol. Flow (Std. Cond) (barrel/day)	284.1	0.0000	0.0000	284.1
Liquid Fraction	1.000	0.0000	1.000	1.000
Molar Volume (m3/kgmole)	1.829e-002	0.2576	0.1551	1.829e-002
Mass Heat of Vap. (kJ/kg)	1459	---	---	---
Phase Fraction [Molar Basis]	0.0000	0.0000	0.0000	1.0000
Surface Tension (dyne/cm)	66.43	---	11.50	66.43
Thermal Conductivity (W/m-K)	0.6507	4.244e-002	8.981e-002	0.6507
Viscosity (cP)	0.4840	1.509e-002	3.929	0.4840
Cv (Semi-Ideal) (kJ/kgmole-C)	69.41	50.53	234.2	69.41
Mass Cv (Semi-Ideal) (kJ/kg-C)	3.850	2.304	2.083	3.850
Cv (kJ/kgmole-C)	67.01	37.46	194.6	67.01
Mass Cv (kJ/kg-C)	3.717	1.708	1.730	3.717
Cv (Ent. Method) (kJ/kgmole-C)	65.44	---	205.8	65.44
Mass Cv (Ent. Method) (kJ/kg-C)	3.630	---	1.830	3.630
Cp/Cv (Ent. Method)	1.188	---	1.178	1.188
Reid VP at 37.8 C (psig)	---	---	201.9	---
True VP at 37.8 C (psig)	1267	2958	1094	1267
Liq. Vol. Flow - Sum(Std. Cond) (barrel/day)	284.1	0.0000	0.0000	284.1
HHV Molar Basis (Std) (Btu/SCF)	46.44	---	---	46.44
HHV Mass Basis (Std) (kJ/kg)	2274	---	---	2274
CO2 Loading	---	---	---	---
CO2 App ML Con (kgmole/m3)	2.895e-002	---	---	2.895e-002
CO2 App WT Con (kgmol/kg)	2.937e-005	---	---	2.937e-005
Phase Fraction [Act. Vol. Basis]	0.0000	0.0000	0.0000	1.000
Mass Exergy (kJ/kg)	17.03	---	---	---
Viscosity Index	-8.863	---	---	---
Ideal Gas Cp/Cv	1.327	1.231	1.045	1.327
Ideal Gas Cp (kJ/kgmole-C)	33.78	44.35	193.2	33.78
Mass Ideal Gas Cp (kJ/kg-C)	1.873	2.022	1.718	1.873
Bubble Point Pressure (psig)	458.1	---	---	---

COMPOSITION

Overall Phase

Vapour Fraction 0.0000

COMPONENTS	MOLAR FLOW (kgmole/h)	MOLE FRACTION	MASS FLOW (tonne/d)	MASS FRACTION	LIQUID VOLUME FLOW (m3/h)	LIQUID VOLUME FRACTION
Methane	0.0002	0.0000	0.0001	0.0000	0.0000	0.0000
Ethane	0.0000	0.0000	0.0000	0.0000	0.0000	0.0000
Propane	0.0000	0.0000	0.0000	0.0000	0.0000	0.0000

* Specified by user.

Material Stream: Pandhi-Water (continued)

Fluid Package: Basis-1
Property Package: Peng-Robinson

COMPOSITION

Overall Phase (continued)

Vapour Fraction 0.0000

COMPONENTS	MOLAR FLOW (kgmole/h)	MOLE FRACTION	MASS FLOW (tonne/d)	MASS FRACTION	LIQUID VOLUME FLOW (m3/h)	LIQUID VOLUME FRACTION
i-Butane	0.0000	0.0000	0.0000	0.0000	0.0000	0.0000
n-Butane	0.0000	0.0000	0.0000	0.0000	0.0000	0.0000
i-Pentane	0.0000	0.0000	0.0000	0.0000	0.0000	0.0000
n-Pentane	0.0000	0.0000	0.0000	0.0000	0.0000	0.0000
n-Hexane	0.0000	0.0000	0.0000	0.0000	0.0000	0.0000
Nitrogen	0.0017	0.0000	0.0011	0.0000	0.0001	0.0000
CO2	0.0561	0.0005	0.0593	0.0013	0.0030	0.0016
H2S	0.0000	0.0000	0.0000	0.0000	0.0000	0.0000
H2O	105.9133	0.9995	45.7929	0.9987	1.9119	0.9984
NBP[1]95*	0.0000	0.0000	0.0000	0.0000	0.0000	0.0000
NBP[1]121*	0.0000	0.0000	0.0000	0.0000	0.0000	0.0000
NBP[1]147*	0.0000	0.0000	0.0000	0.0000	0.0000	0.0000
NBP[1]171*	0.0000	0.0000	0.0000	0.0000	0.0000	0.0000
NBP[1]195*	0.0000	0.0000	0.0000	0.0000	0.0000	0.0000
NBP[1]222*	0.0000	0.0000	0.0000	0.0000	0.0000	0.0000
NBP[1]248*	0.0000	0.0000	0.0000	0.0000	0.0000	0.0000
NBP[1]273*	0.0000	0.0000	0.0000	0.0000	0.0000	0.0000
NBP[1]299*	0.0000	0.0000	0.0000	0.0000	0.0000	0.0000
NBP[1]325*	0.0000	0.0000	0.0000	0.0000	0.0000	0.0000
NBP[1]351*	0.0000	0.0000	0.0000	0.0000	0.0000	0.0000
NBP[1]377*	0.0000	0.0000	0.0000	0.0000	0.0000	0.0000
NBP[1]402*	0.0000	0.0000	0.0000	0.0000	0.0000	0.0000
NBP[1]428*	0.0000	0.0000	0.0000	0.0000	0.0000	0.0000
NBP[1]454*	0.0000	0.0000	0.0000	0.0000	0.0000	0.0000
NBP[1]480*	0.0000	0.0000	0.0000	0.0000	0.0000	0.0000
NBP[1]505*	0.0000	0.0000	0.0000	0.0000	0.0000	0.0000
NBP[1]531*	0.0000	0.0000	0.0000	0.0000	0.0000	0.0000
NBP[1]557*	0.0000	0.0000	0.0000	0.0000	0.0000	0.0000
NBP[1]582*	0.0000	0.0000	0.0000	0.0000	0.0000	0.0000
NBP[1]608*	0.0000	0.0000	0.0000	0.0000	0.0000	0.0000
NBP[1]634*	0.0000	0.0000	0.0000	0.0000	0.0000	0.0000
NBP[1]659*	0.0000	0.0000	0.0000	0.0000	0.0000	0.0000
NBP[1]685*	0.0000	0.0000	0.0000	0.0000	0.0000	0.0000
NBP[1]711*	0.0000	0.0000	0.0000	0.0000	0.0000	0.0000
NBP[1]736*	0.0000	0.0000	0.0000	0.0000	0.0000	0.0000
NBP[1]762*	0.0000	0.0000	0.0000	0.0000	0.0000	0.0000
NBP[1]788*	0.0000	0.0000	0.0000	0.0000	0.0000	0.0000
NBP[1]825*	0.0000	0.0000	0.0000	0.0000	0.0000	0.0000
NBP[1]873*	0.0000	0.0000	0.0000	0.0000	0.0000	0.0000
NBP[1]926*	0.0000	0.0000	0.0000	0.0000	0.0000	0.0000
NBP[1]978*	0.0000	0.0000	0.0000	0.0000	0.0000	0.0000
NBP[1]1021*	0.0000	0.0000	0.0000	0.0000	0.0000	0.0000
NBP[1]1075*	0.0000	0.0000	0.0000	0.0000	0.0000	0.0000
NBP[1]1123*	0.0000	0.0000	0.0000	0.0000	0.0000	0.0000
NBP[1]1173*	0.0000	0.0000	0.0000	0.0000	0.0000	0.0000
NBP[1]1250*	0.0000	0.0000	0.0000	0.0000	0.0000	0.0000
NBP[1]1339*	0.0000	0.0000	0.0000	0.0000	0.0000	0.0000
NBP[1]1432*	0.0000	0.0000	0.0000	0.0000	0.0000	0.0000
NBP[1]1528*	0.0000	0.0000	0.0000	0.0000	0.0000	0.0000
NBP[1]1637*	0.0000	0.0000	0.0000	0.0000	0.0000	0.0000
NBP[1]1732*	0.0000	0.0000	0.0000	0.0000	0.0000	0.0000
NBP[1]1819*	0.0000	0.0000	0.0000	0.0000	0.0000	0.0000
NBP[1]1913*	0.0000	0.0000	0.0000	0.0000	0.0000	0.0000
Total	105.9713	1.0000	45.8534	1.0000	1.9150	1.0000

* Specified by user.

Material Stream: Pandhi-Water (continued)

Fluid Package: Basis-1
Property Package: Peng-Robinson

COMPOSITION

Vapour Phase

Phase Fraction 0.0000

COMPONENTS	MOLAR FLOW (kgmole/h)	MOLE FRACTION	MASS FLOW (tonne/d)	MASS FRACTION	LIQUID VOLUME FLOW (m3/h)	LIQUID VOLUME FRACTION
Methane	0.0000	0.7578	0.0000	0.5544	0.0000	0.6780
Ethane	0.0000	0.1017	0.0000	0.1395	0.0000	0.1436
Propane	0.0000	0.0508	0.0000	0.1022	0.0000	0.0739
i-Butane	0.0000	0.0063	0.0000	0.0166	0.0000	0.0108
n-Butane	0.0000	0.0117	0.0000	0.0311	0.0000	0.0195
i-Pentane	0.0000	0.0022	0.0000	0.0072	0.0000	0.0042
n-Pentane	0.0000	0.0023	0.0000	0.0077	0.0000	0.0045
n-Hexane	0.0000	0.0027	0.0000	0.0105	0.0000	0.0058
Nitrogen	0.0000	0.0207	0.0000	0.0264	0.0000	0.0120
CO2	0.0000	0.0335	0.0000	0.0673	0.0000	0.0298
H2S	0.0000	0.0000	0.0000	0.0000	0.0000	0.0000
H2O	0.0000	0.0028	0.0000	0.0023	0.0000	0.0008
NBP[1]95*	0.0000	0.0007	0.0000	0.0022	0.0000	0.0012
NBP[1]121*	0.0000	0.0007	0.0000	0.0025	0.0000	0.0013
NBP[1]147*	0.0000	0.0008	0.0000	0.0030	0.0000	0.0016
NBP[1]171*	0.0000	0.0014	0.0000	0.0054	0.0000	0.0028
NBP[1]195*	0.0000	0.0015	0.0000	0.0064	0.0000	0.0032
NBP[1]222*	0.0000	0.0009	0.0000	0.0040	0.0000	0.0020
NBP[1]248*	0.0000	0.0006	0.0000	0.0028	0.0000	0.0014
NBP[1]273*	0.0000	0.0003	0.0000	0.0018	0.0000	0.0009
NBP[1]299*	0.0000	0.0002	0.0000	0.0011	0.0000	0.0005
NBP[1]325*	0.0000	0.0001	0.0000	0.0006	0.0000	0.0003
NBP[1]351*	0.0000	0.0001	0.0000	0.0003	0.0000	0.0002
NBP[1]377*	0.0000	0.0000	0.0000	0.0002	0.0000	0.0001
NBP[1]402*	0.0000	0.0000	0.0000	0.0001	0.0000	0.0001
NBP[1]428*	0.0000	0.0000	0.0000	0.0001	0.0000	0.0000
NBP[1]454*	0.0000	0.0000	0.0000	0.0001	0.0000	0.0000
NBP[1]480*	0.0000	0.0000	0.0000	0.0000	0.0000	0.0000
NBP[1]505*	0.0000	0.0000	0.0000	0.0000	0.0000	0.0000
NBP[1]531*	0.0000	0.0000	0.0000	0.0000	0.0000	0.0000
NBP[1]557*	0.0000	0.0000	0.0000	0.0000	0.0000	0.0000
NBP[1]582*	0.0000	0.0000	0.0000	0.0000	0.0000	0.0000
NBP[1]608*	0.0000	0.0000	0.0000	0.0000	0.0000	0.0000
NBP[1]634*	0.0000	0.0000	0.0000	0.0000	0.0000	0.0000
NBP[1]659*	0.0000	0.0000	0.0000	0.0000	0.0000	0.0000
NBP[1]685*	0.0000	0.0000	0.0000	0.0000	0.0000	0.0000
NBP[1]711*	0.0000	0.0000	0.0000	0.0000	0.0000	0.0000
NBP[1]736*	0.0000	0.0000	0.0000	0.0000	0.0000	0.0000
NBP[1]762*	0.0000	0.0000	0.0000	0.0000	0.0000	0.0000
NBP[1]788*	0.0000	0.0000	0.0000	0.0000	0.0000	0.0000
NBP[1]825*	0.0000	0.0000	0.0000	0.0000	0.0000	0.0000
NBP[1]873*	0.0000	0.0000	0.0000	0.0000	0.0000	0.0000
NBP[1]926*	0.0000	0.0000	0.0000	0.0000	0.0000	0.0000
NBP[1]978*	0.0000	0.0000	0.0000	0.0000	0.0000	0.0000
NBP[1]1021*	0.0000	0.0000	0.0000	0.0000	0.0000	0.0000
NBP[1]1075*	0.0000	0.0000	0.0000	0.0000	0.0000	0.0000
NBP[1]1123*	0.0000	0.0000	0.0000	0.0000	0.0000	0.0000
NBP[1]1173*	0.0000	0.0000	0.0000	0.0000	0.0000	0.0000
NBP[1]1250*	0.0000	0.0000	0.0000	0.0000	0.0000	0.0000
NBP[1]1339*	0.0000	0.0000	0.0000	0.0000	0.0000	0.0000
NBP[1]1432*	0.0000	0.0000	0.0000	0.0000	0.0000	0.0000
NBP[1]1528*	0.0000	0.0000	0.0000	0.0000	0.0000	0.0000
NBP[1]1637*	0.0000	0.0000	0.0000	0.0000	0.0000	0.0000
NBP[1]1732*	0.0000	0.0000	0.0000	0.0000	0.0000	0.0000

* Specified by user.

Material Stream: Pandhi-Water (continued)

Fluid Package: Basis-1
Property Package: Peng-Robinson

COMPOSITION

Vapour Phase (continued)

Phase Fraction 0.0000

COMPONENTS	MOLAR FLOW (kgmole/h)	MOLE FRACTION	MASS FLOW (tonne/d)	MASS FRACTION	LIQUID VOLUME FLOW (m3/h)	LIQUID VOLUME FRACTION
NBP[1]1819*	0.0000	0.0000	0.0000	0.0018	0.0000	0.0006
NBP[1]1913*	0.0000	0.0000	0.0000	0.0022	0.0000	0.0008
Total	0.0000	1.0000	0.0000	1.0000	0.0000	1.0000

Liquid Phase

Phase Fraction 0.0000

COMPONENTS	MOLAR FLOW (kgmole/h)	MOLE FRACTION	MASS FLOW (tonne/d)	MASS FRACTION	LIQUID VOLUME FLOW (m3/h)	LIQUID VOLUME FRACTION
Methane	0.0000	0.2372	0.0000	0.0338	0.0000	0.0831
Ethane	0.0000	0.0853	0.0000	0.0228	0.0000	0.0471
Propane	0.0000	0.0890	0.0000	0.0349	0.0000	0.0506
i-Butane	0.0000	0.0189	0.0000	0.0097	0.0000	0.0127
n-Butane	0.0000	0.0432	0.0000	0.0223	0.0000	0.0282
i-Pentane	0.0000	0.0139	0.0000	0.0089	0.0000	0.0105
n-Pentane	0.0000	0.0176	0.0000	0.0113	0.0000	0.0132
n-Hexane	0.0000	0.0399	0.0000	0.0306	0.0000	0.0339
Nitrogen	0.0000	0.0035	0.0000	0.0009	0.0000	0.0008
CO2	0.0000	0.0212	0.0000	0.0083	0.0000	0.0074
H2S	0.0000	0.0000	0.0000	0.0000	0.0000	0.0000
H2O	0.0000	0.0019	0.0000	0.0003	0.0000	0.0002
NBP[1]95*	0.0000	0.0053	0.0000	0.0032	0.0000	0.0034
NBP[1]121*	0.0000	0.0074	0.0000	0.0048	0.0000	0.0051
NBP[1]147*	0.0000	0.0111	0.0000	0.0079	0.0000	0.0083
NBP[1]171*	0.0000	0.0243	0.0000	0.0190	0.0000	0.0196
NBP[1]195*	0.0000	0.0359	0.0000	0.0298	0.0000	0.0304
NBP[1]222*	0.0000	0.0300	0.0000	0.0268	0.0000	0.0271
NBP[1]248*	0.0000	0.0273	0.0000	0.0263	0.0000	0.0262
NBP[1]273*	0.0000	0.0236	0.0000	0.0242	0.0000	0.0239
NBP[1]299*	0.0000	0.0194	0.0000	0.0213	0.0000	0.0207
NBP[1]325*	0.0000	0.0146	0.0000	0.0170	0.0000	0.0164
NBP[1]351*	0.0000	0.0122	0.0000	0.0151	0.0000	0.0145
NBP[1]377*	0.0000	0.0114	0.0000	0.0151	0.0000	0.0143
NBP[1]402*	0.0000	0.0106	0.0000	0.0150	0.0000	0.0140
NBP[1]428*	0.0000	0.0102	0.0000	0.0153	0.0000	0.0142
NBP[1]454*	0.0000	0.0102	0.0000	0.0164	0.0000	0.0151
NBP[1]480*	0.0000	0.0104	0.0000	0.0179	0.0000	0.0162
NBP[1]505*	0.0000	0.0101	0.0000	0.0185	0.0000	0.0167
NBP[1]531*	0.0000	0.0098	0.0000	0.0190	0.0000	0.0170
NBP[1]557*	0.0000	0.0094	0.0000	0.0195	0.0000	0.0173
NBP[1]582*	0.0000	0.0090	0.0000	0.0198	0.0000	0.0174
NBP[1]608*	0.0000	0.0087	0.0000	0.0203	0.0000	0.0176
NBP[1]634*	0.0000	0.0085	0.0000	0.0211	0.0000	0.0182
NBP[1]659*	0.0000	0.0084	0.0000	0.0219	0.0000	0.0188
NBP[1]685*	0.0000	0.0087	0.0000	0.0240	0.0000	0.0203
NBP[1]711*	0.0000	0.0091	0.0000	0.0263	0.0000	0.0222
NBP[1]736*	0.0000	0.0090	0.0000	0.0273	0.0000	0.0228
NBP[1]762*	0.0000	0.0087	0.0000	0.0279	0.0000	0.0231
NBP[1]788*	0.0000	0.0084	0.0000	0.0283	0.0000	0.0233
NBP[1]825*	0.0000	0.0140	0.0000	0.0509	0.0000	0.0415
NBP[1]873*	0.0000	0.0097	0.0000	0.0380	0.0000	0.0307
NBP[1]926*	0.0000	0.0076	0.0000	0.0323	0.0000	0.0257
NBP[1]978*	0.0000	0.0078	0.0000	0.0363	0.0000	0.0285
NBP[1]1021*	0.0000	0.0039	0.0000	0.0189	0.0000	0.0147
NBP[1]1075*	0.0000	0.0024	0.0000	0.0124	0.0000	0.0095
NBP[1]1123*	0.0000	0.0022	0.0000	0.0123	0.0000	0.0094

* Specified by user.

Material Stream: Pandhi-Water (continued)

Fluid Package: Basis-1
Property Package: Peng-Robinson

COMPOSITION

Liquid Phase (continued)

Phase Fraction 0.0000

COMPONENTS	MOLAR FLOW (kgmole/h)	MOLE FRACTION	MASS FLOW (tonne/d)	MASS FRACTION	LIQUID VOLUME FLOW (m3/h)	LIQUID VOLUME FRACTION
NBP[1]1173*	0.0000	0.0016	0.0000	0.0094	0.0000	0.0071
NBP[1]1250*	0.0000	0.0021	0.0000	0.0133	0.0000	0.0099
NBP[1]1339*	0.0000	0.0019	0.0000	0.0137	0.0000	0.0101
NBP[1]1432*	0.0000	0.0014	0.0000	0.0106	0.0000	0.0077
NBP[1]1528*	0.0000	0.0010	0.0000	0.0080	0.0000	0.0057
NBP[1]1637*	0.0000	0.0007	0.0000	0.0060	0.0000	0.0042
NBP[1]1732*	0.0000	0.0005	0.0000	0.0050	0.0000	0.0035
NBP[1]1819*	0.0000	0.0000	0.0000	0.0000	0.0000	0.0000
NBP[1]1913*	0.0000	0.0000	0.0000	0.0000	0.0000	0.0000
Total	0.0000	1.0000	0.0000	1.0000	0.0000	1.0000

Aqueous Phase

Phase Fraction 1.000

COMPONENTS	MOLAR FLOW (kgmole/h)	MOLE FRACTION	MASS FLOW (tonne/d)	MASS FRACTION	LIQUID VOLUME FLOW (m3/h)	LIQUID VOLUME FRACTION
Methane	0.0002	0.0000	0.0001	0.0000	0.0000	0.0000
Ethane	0.0000	0.0000	0.0000	0.0000	0.0000	0.0000
Propane	0.0000	0.0000	0.0000	0.0000	0.0000	0.0000
i-Butane	0.0000	0.0000	0.0000	0.0000	0.0000	0.0000
n-Butane	0.0000	0.0000	0.0000	0.0000	0.0000	0.0000
i-Pentane	0.0000	0.0000	0.0000	0.0000	0.0000	0.0000
n-Pentane	0.0000	0.0000	0.0000	0.0000	0.0000	0.0000
n-Hexane	0.0000	0.0000	0.0000	0.0000	0.0000	0.0000
Nitrogen	0.0017	0.0000	0.0011	0.0000	0.0001	0.0000
CO2	0.0561	0.0005	0.0593	0.0013	0.0030	0.0016
H2S	0.0000	0.0000	0.0000	0.0000	0.0000	0.0000
H2O	105.9133	0.9995	45.7929	0.9987	1.9119	0.9984
NBP[1]95*	0.0000	0.0000	0.0000	0.0000	0.0000	0.0000
NBP[1]121*	0.0000	0.0000	0.0000	0.0000	0.0000	0.0000
NBP[1]147*	0.0000	0.0000	0.0000	0.0000	0.0000	0.0000
NBP[1]171*	0.0000	0.0000	0.0000	0.0000	0.0000	0.0000
NBP[1]195*	0.0000	0.0000	0.0000	0.0000	0.0000	0.0000
NBP[1]222*	0.0000	0.0000	0.0000	0.0000	0.0000	0.0000
NBP[1]248*	0.0000	0.0000	0.0000	0.0000	0.0000	0.0000
NBP[1]273*	0.0000	0.0000	0.0000	0.0000	0.0000	0.0000
NBP[1]299*	0.0000	0.0000	0.0000	0.0000	0.0000	0.0000
NBP[1]325*	0.0000	0.0000	0.0000	0.0000	0.0000	0.0000
NBP[1]351*	0.0000	0.0000	0.0000	0.0000	0.0000	0.0000
NBP[1]377*	0.0000	0.0000	0.0000	0.0000	0.0000	0.0000
NBP[1]402*	0.0000	0.0000	0.0000	0.0000	0.0000	0.0000
NBP[1]428*	0.0000	0.0000	0.0000	0.0000	0.0000	0.0000
NBP[1]454*	0.0000	0.0000	0.0000	0.0000	0.0000	0.0000
NBP[1]480*	0.0000	0.0000	0.0000	0.0000	0.0000	0.0000
NBP[1]505*	0.0000	0.0000	0.0000	0.0000	0.0000	0.0000
NBP[1]531*	0.0000	0.0000	0.0000	0.0000	0.0000	0.0000
NBP[1]557*	0.0000	0.0000	0.0000	0.0000	0.0000	0.0000
NBP[1]582*	0.0000	0.0000	0.0000	0.0000	0.0000	0.0000
NBP[1]608*	0.0000	0.0000	0.0000	0.0000	0.0000	0.0000
NBP[1]634*	0.0000	0.0000	0.0000	0.0000	0.0000	0.0000
NBP[1]659*	0.0000	0.0000	0.0000	0.0000	0.0000	0.0000
NBP[1]685*	0.0000	0.0000	0.0000	0.0000	0.0000	0.0000
NBP[1]711*	0.0000	0.0000	0.0000	0.0000	0.0000	0.0000
NBP[1]736*	0.0000	0.0000	0.0000	0.0000	0.0000	0.0000
NBP[1]762*	0.0000	0.0000	0.0000	0.0000	0.0000	0.0000
NBP[1]788*	0.0000	0.0000	0.0000	0.0000	0.0000	0.0000

* Specified by user.

Material Stream: Pandhi-Water (continued)

Fluid Package: Basis-1
Property Package: Peng-Robinson

COMPOSITION

Aqueous Phase (continued)

Phase Fraction 1.000

COMPONENTS	MOLAR FLOW (kgmole/h)	MOLE FRACTION	MASS FLOW (tonne/d)	MASS FRACTION	LIQUID VOLUME FLOW (m3/h)	LIQUID VOLUME FRACTION
NBP[1]825*	0.0000	0.0000	0.0000	0.0000	0.0000	0.0000
NBP[1]873*	0.0000	0.0000	0.0000	0.0000	0.0000	0.0000
NBP[1]926*	0.0000	0.0000	0.0000	0.0000	0.0000	0.0000
NBP[1]978*	0.0000	0.0000	0.0000	0.0000	0.0000	0.0000
NBP[1]1021*	0.0000	0.0000	0.0000	0.0000	0.0000	0.0000
NBP[1]1075*	0.0000	0.0000	0.0000	0.0000	0.0000	0.0000
NBP[1]1123*	0.0000	0.0000	0.0000	0.0000	0.0000	0.0000
NBP[1]1173*	0.0000	0.0000	0.0000	0.0000	0.0000	0.0000
NBP[1]1250*	0.0000	0.0000	0.0000	0.0000	0.0000	0.0000
NBP[1]1339*	0.0000	0.0000	0.0000	0.0000	0.0000	0.0000
NBP[1]1432*	0.0000	0.0000	0.0000	0.0000	0.0000	0.0000
NBP[1]1528*	0.0000	0.0000	0.0000	0.0000	0.0000	0.0000
NBP[1]1637*	0.0000	0.0000	0.0000	0.0000	0.0000	0.0000
NBP[1]1732*	0.0000	0.0000	0.0000	0.0000	0.0000	0.0000
NBP[1]1819*	0.0000	0.0000	0.0000	0.0000	0.0000	0.0000
NBP[1]1913*	0.0000	0.0000	0.0000	0.0000	0.0000	0.0000
Total	105.9713	1.0000	45.8534	1.0000	1.9150	1.0000

Material Stream: permeate

Fluid Package: Basis-1
Property Package: Peng-Robinson

CONDITIONS

		Overall	Vapour Phase
Vapour / Phase Fraction		1.0000	1.0000
Temperature:	(F)	100.0 *	100.0
Pressure:	(psig)	20.00 *	20.00
Molar Flow	(MMSCFD)	2.810 *	2.810
Mass Flow	(tonne/d)	76.19	76.19
Std Ideal Liq Vol Flow	(barrel/day)	1140	1140
Molar Enthalpy	(kJ/kgmole)	-1.319e+005	-1.319e+005
Molar Entropy	(kJ/kgmole-C)	181.4	181.4
Heat Flow	(MMBtu/hr)	-17.50	-17.50
Liq Vol Flow @Std Cond	(barrel/day)	4.980e+005 *	4.980e+005

PROPERTIES

		Overall	Vapour Phase
Molecular Weight		22.68	22.68
Molar Density	(kgmole/m3)	9.306e-002	9.306e-002
Mass Density	(kg/m3)	2.111	2.111
Act. Volume Flow	(barrel/day)	2.270e+005	2.270e+005
Mass Enthalpy	(kJ/kg)	-5817	-5817
Mass Entropy	(kJ/kg-C)	7.998	7.998
Heat Capacity	(kJ/kgmole-C)	37.74	37.74
Mass Heat Capacity	(kJ/kg-C)	1.664	1.664
LHV Molar Basis (Std)	(Btu/SCF)	727.1	727.1
LHV Mass Basis (Std)	(kJ/kg)	2.829e+004	2.829e+004
Phase Fraction [Vol. Basis]		1.000	1.000
Phase Fraction [Mass Basis]		1.000	1.000
Partial Pressure of CO2	(psig)	-8.100	---
Cost Based on Flow	(Cost/s)	0.0000	0.0000
Act. Gas Flow	(ACT_m3/h)	1504	1504
Avg. Liq. Density	(kgmole/m3)	18.53	18.53
Specific Heat	(kJ/kgmole-C)	37.74	37.74
Std. Gas Flow	(STD_m3/h)	3309	3309

* Specified by user.

Material Stream: permeate (continued)

Fluid Package: Basis-1
Property Package: Peng-Robinson

PROPERTIES

	Overall	Vapour Phase
Std. Ideal Liq. Mass Density (kg/m3)	420.3	420.3
Act. Liq. Flow (barrel/day)	---	---
Z Factor	0.9944	0.9944
Watson K	14.59	14.59
User Property	---	---
Partial Pressure of H2S (psig)	-14.70	---
Cp/(Cp - R)	1.283	1.283
Cp/Cv	1.292	1.292
Heat of Vap. (kJ/kgmole)	1.372e+004	---
Kinematic Viscosity (cSt)	5.993	5.993
Liq. Mass Density (Std. Cond) (kg/m3)	0.9622	0.9622
Liq. Vol. Flow (Std. Cond) (barrel/day)	4.980e+005	4.980e+005
Liquid Fraction	0.0000	0.0000
Molar Volume (m3/kgmole)	10.75	10.75
Mass Heat of Vap. (kJ/kg)	604.9	---
Phase Fraction [Molar Basis]	1.0000	1.0000
Surface Tension (dyne/cm)	---	---
Thermal Conductivity (W/m-K)	3.032e-002	3.032e-002
Viscosity (cP)	1.265e-002	1.265e-002
Cv (Semi-Ideal) (kJ/kgmole-C)	29.43	29.43
Mass Cv (Semi-Ideal) (kJ/kg-C)	1.297	1.297
Cv (kJ/kgmole-C)	29.20	29.20
Mass Cv (kJ/kg-C)	1.288	1.288
Cv (Ent. Method) (kJ/kgmole-C)	---	---
Mass Cv (Ent. Method) (kJ/kg-C)	---	---
Cp/Cv (Ent. Method)	---	---
Reid VP at 37.8 C (psig)	---	---
True VP at 37.8 C (psig)	---	---
Liq. Vol. Flow - Sum(Std. Cond) (barrel/day)	4.980e+005	4.980e+005
HHV Molar Basis (Std) (Btu/SCF)	800.0	800.0
HHV Mass Basis (Std) (kJ/kg)	3.113e+004	3.113e+004
CO2 Loading	---	---
CO2 App ML Con (kgmole/m3)	---	---
CO2 App WT Con (kgmol/kg)	---	---
Phase Fraction [Act. Vol. Basis]	1.000	1.000
Mass Exergy (kJ/kg)	93.92	---
Viscosity Index	-9.135	---
Ideal Gas Cp/Cv	1.285	1.285
Ideal Gas Cp (kJ/kgmole-C)	37.49	37.49
Mass Ideal Gas Cp (kJ/kg-C)	1.653	1.653
Bubble Point Pressure (psig)	---	---

COMPOSITION

Overall Phase

Vapour Fraction 1.0000

COMPONENTS	MOLAR FLOW (kgmole/h)	MOLE FRACTION	MASS FLOW (tonne/d)	MASS FRACTION	LIQUID VOLUME FLOW (m3/h)	LIQUID VOLUME FRACTION
Methane	100.4480 *	0.7177 *	38.6754 *	0.5076 *	5.3825 *	0.7126 *
Ethane	5.2335 *	0.0374 *	3.7769 *	0.0496 *	0.4424 *	0.0586 *
Propane	0.3663 *	0.0026 *	0.3877 *	0.0051 *	0.0319 *	0.0042 *
i-Butane	0.0209 *	0.0001 *	0.0292 *	0.0004 *	0.0022 *	0.0003 *
n-Butane	0.0209 *	0.0001 *	0.0292 *	0.0004 *	0.0021 *	0.0003 *
i-Pentane	0.0105 *	0.0001 *	0.0181 *	0.0002 *	0.0012 *	0.0002 *
n-Pentane	0.0000 *	0.0000 *	0.0000 *	0.0000 *	0.0000 *	0.0000 *
n-Hexane	0.2093 *	0.0015 *	0.4330 *	0.0057 *	0.0272 *	0.0036 *
Nitrogen	7.0412 *	0.0503 *	4.7339 *	0.0621 *	0.2446 *	0.0324 *
CO2	26.6072 *	0.1901 *	28.1034 *	0.3689 *	1.4188 *	0.1878 *

* Specified by user.

Material Stream: permeate (continued)

Fluid Package: Basis-1
Property Package: Peng-Robinson

COMPOSITION

Overall Phase (continued)

Vapour Fraction 1.0000

COMPONENTS	MOLAR FLOW (kgmole/h)	MOLE FRACTION	MASS FLOW (tonne/d)	MASS FRACTION	LIQUID VOLUME FLOW (m3/h)	LIQUID VOLUME FRACTION
H2S	0.0000 *	0.0000 *	0.0000 *	0.0000 *	0.0000 *	0.0000 *
H2O	0.0000 *	0.0000 *	0.0000 *	0.0000 *	0.0000 *	0.0000 *
NBP[1]95*	0.0000 *	0.0000 *	0.0000 *	0.0000 *	0.0000 *	0.0000 *
NBP[1]121*	0.0000 *	0.0000 *	0.0000 *	0.0000 *	0.0000 *	0.0000 *
NBP[1]147*	0.0000 *	0.0000 *	0.0000 *	0.0000 *	0.0000 *	0.0000 *
NBP[1]171*	0.0000 *	0.0000 *	0.0000 *	0.0000 *	0.0000 *	0.0000 *
NBP[1]195*	0.0000 *	0.0000 *	0.0000 *	0.0000 *	0.0000 *	0.0000 *
NBP[1]222*	0.0000 *	0.0000 *	0.0000 *	0.0000 *	0.0000 *	0.0000 *
NBP[1]248*	0.0000 *	0.0000 *	0.0000 *	0.0000 *	0.0000 *	0.0000 *
NBP[1]273*	0.0000 *	0.0000 *	0.0000 *	0.0000 *	0.0000 *	0.0000 *
NBP[1]299*	0.0000 *	0.0000 *	0.0000 *	0.0000 *	0.0000 *	0.0000 *
NBP[1]325*	0.0000 *	0.0000 *	0.0000 *	0.0000 *	0.0000 *	0.0000 *
NBP[1]351*	0.0000 *	0.0000 *	0.0000 *	0.0000 *	0.0000 *	0.0000 *
NBP[1]377*	0.0000 *	0.0000 *	0.0000 *	0.0000 *	0.0000 *	0.0000 *
NBP[1]402*	0.0000 *	0.0000 *	0.0000 *	0.0000 *	0.0000 *	0.0000 *
NBP[1]428*	0.0000 *	0.0000 *	0.0000 *	0.0000 *	0.0000 *	0.0000 *
NBP[1]454*	0.0000 *	0.0000 *	0.0000 *	0.0000 *	0.0000 *	0.0000 *
NBP[1]480*	0.0000 *	0.0000 *	0.0000 *	0.0000 *	0.0000 *	0.0000 *
NBP[1]505*	0.0000 *	0.0000 *	0.0000 *	0.0000 *	0.0000 *	0.0000 *
NBP[1]531*	0.0000 *	0.0000 *	0.0000 *	0.0000 *	0.0000 *	0.0000 *
NBP[1]557*	0.0000 *	0.0000 *	0.0000 *	0.0000 *	0.0000 *	0.0000 *
NBP[1]582*	0.0000 *	0.0000 *	0.0000 *	0.0000 *	0.0000 *	0.0000 *
NBP[1]608*	0.0000 *	0.0000 *	0.0000 *	0.0000 *	0.0000 *	0.0000 *
NBP[1]634*	0.0000 *	0.0000 *	0.0000 *	0.0000 *	0.0000 *	0.0000 *
NBP[1]659*	0.0000 *	0.0000 *	0.0000 *	0.0000 *	0.0000 *	0.0000 *
NBP[1]685*	0.0000 *	0.0000 *	0.0000 *	0.0000 *	0.0000 *	0.0000 *
NBP[1]711*	0.0000 *	0.0000 *	0.0000 *	0.0000 *	0.0000 *	0.0000 *
NBP[1]736*	0.0000 *	0.0000 *	0.0000 *	0.0000 *	0.0000 *	0.0000 *
NBP[1]762*	0.0000 *	0.0000 *	0.0000 *	0.0000 *	0.0000 *	0.0000 *
NBP[1]788*	0.0000 *	0.0000 *	0.0000 *	0.0000 *	0.0000 *	0.0000 *
NBP[1]825*	0.0000 *	0.0000 *	0.0000 *	0.0000 *	0.0000 *	0.0000 *
NBP[1]873*	0.0000 *	0.0000 *	0.0000 *	0.0000 *	0.0000 *	0.0000 *
NBP[1]926*	0.0000 *	0.0000 *	0.0000 *	0.0000 *	0.0000 *	0.0000 *
NBP[1]978*	0.0000 *	0.0000 *	0.0000 *	0.0000 *	0.0000 *	0.0000 *
NBP[1]1021*	0.0000 *	0.0000 *	0.0000 *	0.0000 *	0.0000 *	0.0000 *
NBP[1]1075*	0.0000 *	0.0000 *	0.0000 *	0.0000 *	0.0000 *	0.0000 *
NBP[1]1123*	0.0000 *	0.0000 *	0.0000 *	0.0000 *	0.0000 *	0.0000 *
NBP[1]1173*	0.0000 *	0.0000 *	0.0000 *	0.0000 *	0.0000 *	0.0000 *
NBP[1]1250*	0.0000 *	0.0000 *	0.0000 *	0.0000 *	0.0000 *	0.0000 *
NBP[1]1339*	0.0000 *	0.0000 *	0.0000 *	0.0000 *	0.0000 *	0.0000 *
NBP[1]1432*	0.0000 *	0.0000 *	0.0000 *	0.0000 *	0.0000 *	0.0000 *
NBP[1]1528*	0.0000 *	0.0000 *	0.0000 *	0.0000 *	0.0000 *	0.0000 *
NBP[1]1637*	0.0000 *	0.0000 *	0.0000 *	0.0000 *	0.0000 *	0.0000 *
NBP[1]1732*	0.0000 *	0.0000 *	0.0000 *	0.0000 *	0.0000 *	0.0000 *
NBP[1]1819*	0.0000 *	0.0000 *	0.0000 *	0.0000 *	0.0000 *	0.0000 *
NBP[1]1913*	0.0000 *	0.0000 *	0.0000 *	0.0000 *	0.0000 *	0.0000 *
Total	139.9579	1.0000	76.1868	1.0000	7.5529	1.0000

Vapour Phase

Phase Fraction 1.000

COMPONENTS	MOLAR FLOW (kgmole/h)	MOLE FRACTION	MASS FLOW (tonne/d)	MASS FRACTION	LIQUID VOLUME FLOW (m3/h)	LIQUID VOLUME FRACTION
Methane	100.4480	0.7177	38.6754	0.5076	5.3825	0.7126
Ethane	5.2335	0.0374	3.7769	0.0496	0.4424	0.0586
Propane	0.3663	0.0026	0.3877	0.0051	0.0319	0.0042

* Specified by user.

Material Stream: permeate (continued)

Fluid Package: Basis-1
Property Package: Peng-Robinson

COMPOSITION

Vapour Phase (continued)

Phase Fraction 1.000

COMPONENTS	MOLAR FLOW (kgmole/h)	MOLE FRACTION	MASS FLOW (tonne/d)	MASS FRACTION	LIQUID VOLUME FLOW (m3/h)	LIQUID VOLUME FRACTION
i-Butane	0.0209	0.0001	0.0292	0.0004	0.0022	0.0003
n-Butane	0.0209	0.0001	0.0292	0.0004	0.0021	0.0003
i-Pentane	0.0105	0.0001	0.0181	0.0002	0.0012	0.0002
n-Pentane	0.0000	0.0000	0.0000	0.0000	0.0000	0.0000
n-Hexane	0.2093	0.0015	0.4330	0.0057	0.0272	0.0036
Nitrogen	7.0412	0.0503	4.7339	0.0621	0.2446	0.0324
CO2	26.6072	0.1901	28.1034	0.3689	1.4188	0.1878
H2S	0.0000	0.0000	0.0000	0.0000	0.0000	0.0000
H2O	0.0000	0.0000	0.0000	0.0000	0.0000	0.0000
NBP[1]95*	0.0000	0.0000	0.0000	0.0000	0.0000	0.0000
NBP[1]121*	0.0000	0.0000	0.0000	0.0000	0.0000	0.0000
NBP[1]147*	0.0000	0.0000	0.0000	0.0000	0.0000	0.0000
NBP[1]171*	0.0000	0.0000	0.0000	0.0000	0.0000	0.0000
NBP[1]195*	0.0000	0.0000	0.0000	0.0000	0.0000	0.0000
NBP[1]222*	0.0000	0.0000	0.0000	0.0000	0.0000	0.0000
NBP[1]248*	0.0000	0.0000	0.0000	0.0000	0.0000	0.0000
NBP[1]273*	0.0000	0.0000	0.0000	0.0000	0.0000	0.0000
NBP[1]299*	0.0000	0.0000	0.0000	0.0000	0.0000	0.0000
NBP[1]325*	0.0000	0.0000	0.0000	0.0000	0.0000	0.0000
NBP[1]351*	0.0000	0.0000	0.0000	0.0000	0.0000	0.0000
NBP[1]377*	0.0000	0.0000	0.0000	0.0000	0.0000	0.0000
NBP[1]402*	0.0000	0.0000	0.0000	0.0000	0.0000	0.0000
NBP[1]428*	0.0000	0.0000	0.0000	0.0000	0.0000	0.0000
NBP[1]454*	0.0000	0.0000	0.0000	0.0000	0.0000	0.0000
NBP[1]480*	0.0000	0.0000	0.0000	0.0000	0.0000	0.0000
NBP[1]505*	0.0000	0.0000	0.0000	0.0000	0.0000	0.0000
NBP[1]531*	0.0000	0.0000	0.0000	0.0000	0.0000	0.0000
NBP[1]557*	0.0000	0.0000	0.0000	0.0000	0.0000	0.0000
NBP[1]582*	0.0000	0.0000	0.0000	0.0000	0.0000	0.0000
NBP[1]608*	0.0000	0.0000	0.0000	0.0000	0.0000	0.0000
NBP[1]634*	0.0000	0.0000	0.0000	0.0000	0.0000	0.0000
NBP[1]659*	0.0000	0.0000	0.0000	0.0000	0.0000	0.0000
NBP[1]685*	0.0000	0.0000	0.0000	0.0000	0.0000	0.0000
NBP[1]711*	0.0000	0.0000	0.0000	0.0000	0.0000	0.0000
NBP[1]736*	0.0000	0.0000	0.0000	0.0000	0.0000	0.0000
NBP[1]762*	0.0000	0.0000	0.0000	0.0000	0.0000	0.0000
NBP[1]788*	0.0000	0.0000	0.0000	0.0000	0.0000	0.0000
NBP[1]825*	0.0000	0.0000	0.0000	0.0000	0.0000	0.0000
NBP[1]873*	0.0000	0.0000	0.0000	0.0000	0.0000	0.0000
NBP[1]926*	0.0000	0.0000	0.0000	0.0000	0.0000	0.0000
NBP[1]978*	0.0000	0.0000	0.0000	0.0000	0.0000	0.0000
NBP[1]1021*	0.0000	0.0000	0.0000	0.0000	0.0000	0.0000
NBP[1]1075*	0.0000	0.0000	0.0000	0.0000	0.0000	0.0000
NBP[1]1123*	0.0000	0.0000	0.0000	0.0000	0.0000	0.0000
NBP[1]1173*	0.0000	0.0000	0.0000	0.0000	0.0000	0.0000
NBP[1]1250*	0.0000	0.0000	0.0000	0.0000	0.0000	0.0000
NBP[1]1339*	0.0000	0.0000	0.0000	0.0000	0.0000	0.0000
NBP[1]1432*	0.0000	0.0000	0.0000	0.0000	0.0000	0.0000
NBP[1]1528*	0.0000	0.0000	0.0000	0.0000	0.0000	0.0000
NBP[1]1637*	0.0000	0.0000	0.0000	0.0000	0.0000	0.0000
NBP[1]1732*	0.0000	0.0000	0.0000	0.0000	0.0000	0.0000
NBP[1]1819*	0.0000	0.0000	0.0000	0.0000	0.0000	0.0000
NBP[1]1913*	0.0000	0.0000	0.0000	0.0000	0.0000	0.0000
Total	139.9579	1.0000	76.1868	1.0000	7.5529	1.0000

* Specified by user.

Material Stream: Sep gas

Fluid Package: Basis-1
Property Package: Peng-Robinson

CONDITIONS

	Overall	Vapour Phase	Liquid Phase	Aqueous Phase
Vapour / Phase Fraction	0.9998	0.9998	0.0002	0.0000
Temperature: (F)	134.9	134.9	134.9	134.9
Pressure: (psig)	1230	1230	1230	1230
Molar Flow (MMSCFD)	5.366	5.366	8.179e-004	0.0000
Mass Flow (tonne/d)	140.7	140.1	0.5894	0.0000
Std Ideal Liq Vol Flow (barrel/day)	2417	2413	3.566	0.0000
Molar Enthalpy (kJ/kgmole)	-9.012e+004	-8.994e+004	-1.273e+006	-2.836e+005
Molar Entropy (kJ/kgmole-C)	152.5	152.3	1518	61.60
Heat Flow (MMBtu/hr)	-22.83	-22.78	-4.913e-002	0.0000
Liq Vol Flow @Std Cond (barrel/day)	9.500e+005 *	9.499e+005	3.747	0.0000

PROPERTIES

	Overall	Vapour Phase	Liquid Phase	Aqueous Phase
Molecular Weight	21.93	21.84	602.9	18.03
Molar Density (kgmole/m3)	3.860	3.861	1.599	46.13
Mass Density (kg/m3)	84.65	84.33	963.8	831.8
Act. Volume Flow (barrel/day)	1.045e+004	1.045e+004	3.847	0.0000
Mass Enthalpy (kJ/kg)	-4110	-4118	-2111	-1.573e+004
Mass Entropy (kJ/kg-C)	6.952	6.971	2.518	3.417
Heat Capacity (kJ/kgmole-C)	58.68	58.50	1229	77.73
Mass Heat Capacity (kJ/kg-C)	2.676	2.678	2.038	4.311
LHV Molar Basis (Std) (Btu/SCF)	---	---	---	1.593e-003
LHV Mass Basis (Std) (kJ/kg)	---	---	---	7.798e-002
Phase Fraction [Vol. Basis]	0.9985	0.9985	1.476e-003	---
Phase Fraction [Mass Basis]	0.9958	0.9958	4.190e-003	0.0000
Partial Pressure of CO2 (psig)	27.02	---	---	---
Cost Based on Flow (Cost/s)	0.0000	0.0000	0.0000	0.0000
Act. Gas Flow (ACT_m3/h)	69.21	69.21	---	---
Avg. Liq. Density (kgmole/m3)	16.70	16.72	1.724	55.34
Specific Heat (kJ/kgmole-C)	58.68	58.50	1229	77.73
Std. Gas Flow (STD_m3/h)	6320	6319	0.9632	0.0000
Std. Ideal Liq. Mass Density (kg/m3)	366.1	365.1	1040	997.7
Act. Liq. Flow (barrel/day)	3.847	---	3.847	0.0000
Z Factor	---	0.8093	1.955	6.773e-002
Watson K	17.09	17.13	11.55	8.494
User Property	---	---	---	---
Partial Pressure of H2S (psig)	-14.69	---	---	---
Cp/(Cp - R)	1.165	1.166	1.007	1.120
Cp/Cv	1.566	1.569	1.078	1.160
Heat of Vap. (kJ/kgmole)	2.643e+004	---	---	---
Kinematic Viscosity (cSt)	---	0.1835	636.2	0.5817
Liq. Mass Density (Std. Cond) (kg/m3)	0.9313	0.9275	989.3	1015
Liq. Vol. Flow (Std. Cond) (barrel/day)	9.500e+005	9.499e+005	3.747	0.0000
Liquid Fraction	1.524e-004	0.0000	1.000	1.000
Molar Volume (m3/kgmole)	0.2590	0.2590	0.6255	2.168e-002
Mass Heat of Vap. (kJ/kg)	1205	---	---	---
Phase Fraction [Molar Basis]	0.9998	0.9998	0.0002	0.0000
Surface Tension (dyne/cm)	12.81	---	12.81	66.43
Thermal Conductivity (W/m-K)	---	4.238e-002	0.1077	0.6508
Viscosity (cP)	---	1.547e-002	613.2	0.4839
Cv (Semi-Ideal) (kJ/kgmole-C)	50.36	50.18	1221	69.41
Mass Cv (Semi-Ideal) (kJ/kg-C)	2.297	2.298	2.025	3.850
Cv (kJ/kgmole-C)	37.47	37.29	1140	67.01
Mass Cv (kJ/kg-C)	1.709	1.707	1.891	3.717
Cv (Ent. Method) (kJ/kgmole-C)	---	---	1163	---
Mass Cv (Ent. Method) (kJ/kg-C)	---	---	1.929	---
Cp/Cv (Ent. Method)	---	---	1.056	---

* Specified by user.

Material Stream: Sep gas (continued)

Fluid Package: Basis-1
Property Package: Peng-Robinson

PROPERTIES

	Overall	Vapour Phase	Liquid Phase	Aqueous Phase
Reid VP at 37.8 C (psig)	---	---	54.47	---
True VP at 37.8 C (psig)	2958	---	1177	1266
Liq. Vol. Flow - Sum(Std. Cond) (barrel/day)	9.499e+005	9.499e+005	3.747	0.0000
HHV Molar Basis (Std) (Btu/SCF)	---	---	---	46.44
HHV Mass Basis (Std) (kJ/kg)	---	---	---	2274
CO2 Loading	---	---	---	---
CO2 App ML Con (kgmole/m3)	---	---	4.038e-002	---
CO2 App WT Con (kgmol/kg)	---	---	4.189e-005	---
Phase Fraction [Act. Vol. Basis]	0.9996	0.9996	3.680e-004	0.0000
Mass Exergy (kJ/kg)	472.2	---	---	---
Viscosity Index	---	---	---	---
Ideal Gas Cp/Cv	1.231	1.232	1.008	1.327
Ideal Gas Cp (kJ/kgmole-C)	44.35	44.20	1034	33.78
Mass Ideal Gas Cp (kJ/kg-C)	2.022	2.024	1.715	1.873
Bubble Point Pressure (psig)	4833	---	---	---

COMPOSITION

Overall Phase

Vapour Fraction 0.9998

COMPONENTS	MOLAR FLOW (kgmole/h)	MOLE FRACTION	MASS FLOW (tonne/d)	MASS FRACTION	LIQUID VOLUME FLOW (m3/h)	LIQUID VOLUME FRACTION
Methane	202.5604	0.7578	77.9918	0.5544	10.8541	0.6780
Ethane	27.1886	0.1017	19.6214	0.1395	2.2986	0.1436
Propane	13.5846	0.0508	14.3770	0.1022	1.1823	0.0739
i-Butane	1.6722	0.0063	2.3327	0.0166	0.1730	0.0108
n-Butane	3.1342	0.0117	4.3722	0.0311	0.3124	0.0195
i-Pentane	0.5867	0.0022	1.0159	0.0072	0.0679	0.0042
n-Pentane	0.6278	0.0023	1.0871	0.0077	0.0719	0.0045
n-Hexane	0.7149	0.0027	1.4785	0.0105	0.0930	0.0058
Nitrogen	5.5318	0.0207	3.7191	0.0264	0.1922	0.0120
CO2	8.9586	0.0335	9.4623	0.0673	0.4777	0.0298
H2S	0.0005	0.0000	0.0004	0.0000	0.0000	0.0000
H2O	0.7497	0.0028	0.3241	0.0023	0.0135	0.0008
NBP[1]95*	0.1884	0.0007	0.3072	0.0022	0.0188	0.0012
NBP[1]121*	0.1986	0.0007	0.3472	0.0025	0.0210	0.0013
NBP[1]147*	0.2215	0.0008	0.4263	0.0030	0.0254	0.0016
NBP[1]171*	0.3628	0.0014	0.7633	0.0054	0.0447	0.0028
NBP[1]195*	0.3981	0.0015	0.8940	0.0064	0.0517	0.0032
NBP[1]222*	0.2332	0.0009	0.5632	0.0040	0.0322	0.0020
NBP[1]248*	0.1497	0.0006	0.3888	0.0028	0.0220	0.0014
NBP[1]273*	0.0905	0.0003	0.2513	0.0018	0.0140	0.0009
NBP[1]299*	0.0516	0.0002	0.1529	0.0011	0.0084	0.0005
NBP[1]325*	0.0263	0.0001	0.0829	0.0006	0.0045	0.0003
NBP[1]351*	0.0147	0.0001	0.0491	0.0003	0.0027	0.0002
NBP[1]377*	0.0089	0.0000	0.0318	0.0002	0.0017	0.0001
NBP[1]402*	0.0054	0.0000	0.0204	0.0001	0.0011	0.0001
NBP[1]428*	0.0033	0.0000	0.0133	0.0001	0.0007	0.0000
NBP[1]454*	0.0020	0.0000	0.0089	0.0001	0.0005	0.0000
NBP[1]480*	0.0013	0.0000	0.0059	0.0000	0.0003	0.0000
NBP[1]505*	0.0008	0.0000	0.0037	0.0000	0.0002	0.0000
NBP[1]531*	0.0004	0.0000	0.0023	0.0000	0.0001	0.0000
NBP[1]557*	0.0002	0.0000	0.0014	0.0000	0.0001	0.0000
NBP[1]582*	0.0001	0.0000	0.0008	0.0000	0.0000	0.0000
NBP[1]608*	0.0001	0.0000	0.0005	0.0000	0.0000	0.0000
NBP[1]634*	0.0000	0.0000	0.0003	0.0000	0.0000	0.0000
NBP[1]659*	0.0000	0.0000	0.0001	0.0000	0.0000	0.0000
NBP[1]685*	0.0000	0.0000	0.0001	0.0000	0.0000	0.0000

* Specified by user.

Material Stream: Sep gas (continued)

Fluid Package: Basis-1
Property Package: Peng-Robinson

COMPOSITION

Overall Phase (continued)

Vapour Fraction 0.9998

COMPONENTS	MOLAR FLOW (kgmole/h)	MOLE FRACTION	MASS FLOW (tonne/d)	MASS FRACTION	LIQUID VOLUME FLOW (m3/h)	LIQUID VOLUME FRACTION
NBP[1]711*	0.0000	0.0000	0.0000	0.0000	0.0000	0.0000
NBP[1]736*	0.0000	0.0000	0.0000	0.0000	0.0000	0.0000
NBP[1]762*	0.0000	0.0000	0.0000	0.0000	0.0000	0.0000
NBP[1]788*	0.0000	0.0000	0.0000	0.0000	0.0000	0.0000
NBP[1]825*	0.0000	0.0000	0.0000	0.0000	0.0000	0.0000
NBP[1]873*	0.0000	0.0000	0.0000	0.0000	0.0000	0.0000
NBP[1]926*	0.0000	0.0000	0.0000	0.0000	0.0000	0.0000
NBP[1]978*	0.0000	0.0000	0.0000	0.0000	0.0000	0.0000
NBP[1]1021*	0.0000	0.0000	0.0000	0.0000	0.0000	0.0000
NBP[1]1075*	0.0000	0.0000	0.0000	0.0000	0.0000	0.0000
NBP[1]1123*	0.0000	0.0000	0.0000	0.0000	0.0000	0.0000
NBP[1]1173*	0.0000	0.0000	0.0000	0.0000	0.0000	0.0000
NBP[1]1250*	0.0000	0.0000	0.0000	0.0000	0.0000	0.0000
NBP[1]1339*	0.0000	0.0000	0.0000	0.0000	0.0000	0.0000
NBP[1]1432*	0.0000	0.0000	0.0000	0.0000	0.0000	0.0000
NBP[1]1528*	0.0000	0.0000	0.0000	0.0000	0.0000	0.0000
NBP[1]1637*	0.0000	0.0000	0.0000	0.0000	0.0000	0.0000
NBP[1]1732*	0.0001	0.0000	0.0017	0.0000	0.0001	0.0000
NBP[1]1819*	0.0097	0.0000	0.2590	0.0018	0.0101	0.0006
NBP[1]1913*	0.0112	0.0000	0.3148	0.0022	0.0121	0.0008
Total	267.2890	1.0000	140.6736	1.0000	16.0089	1.0000

Vapour Phase

Phase Fraction 0.9998

COMPONENTS	MOLAR FLOW (kgmole/h)	MOLE FRACTION	MASS FLOW (tonne/d)	MASS FRACTION	LIQUID VOLUME FLOW (m3/h)	LIQUID VOLUME FRACTION
Methane	202.5484	0.7579	77.9871	0.5567	10.8535	0.6790
Ethane	27.1863	0.1017	19.6197	0.1401	2.2984	0.1438
Propane	13.5830	0.0508	14.3752	0.1026	1.1821	0.0740
i-Butane	1.6719	0.0063	2.3323	0.0166	0.1729	0.0108
n-Butane	3.1337	0.0117	4.3714	0.0312	0.3123	0.0195
i-Pentane	0.5865	0.0022	1.0157	0.0073	0.0679	0.0042
n-Pentane	0.6276	0.0023	1.0868	0.0078	0.0719	0.0045
n-Hexane	0.7146	0.0027	1.4780	0.0106	0.0929	0.0058
Nitrogen	5.5315	0.0207	3.7189	0.0265	0.1922	0.0120
CO2	8.9576	0.0335	9.4613	0.0675	0.4776	0.0299
H2S	0.0005	0.0000	0.0004	0.0000	0.0000	0.0000
H2O	0.7496	0.0028	0.3241	0.0023	0.0135	0.0008
NBP[1]95*	0.1884	0.0007	0.3071	0.0022	0.0188	0.0012
NBP[1]121*	0.1985	0.0007	0.3471	0.0025	0.0210	0.0013
NBP[1]147*	0.2214	0.0008	0.4262	0.0030	0.0253	0.0016
NBP[1]171*	0.3626	0.0014	0.7631	0.0054	0.0447	0.0028
NBP[1]195*	0.3979	0.0015	0.8936	0.0064	0.0517	0.0032
NBP[1]222*	0.2330	0.0009	0.5629	0.0040	0.0322	0.0020
NBP[1]248*	0.1496	0.0006	0.3885	0.0028	0.0219	0.0014
NBP[1]273*	0.0904	0.0003	0.2511	0.0018	0.0140	0.0009
NBP[1]299*	0.0516	0.0002	0.1528	0.0011	0.0084	0.0005
NBP[1]325*	0.0263	0.0001	0.0828	0.0006	0.0045	0.0003
NBP[1]351*	0.0147	0.0001	0.0490	0.0003	0.0027	0.0002
NBP[1]377*	0.0089	0.0000	0.0317	0.0002	0.0017	0.0001
NBP[1]402*	0.0053	0.0000	0.0203	0.0001	0.0011	0.0001
NBP[1]428*	0.0033	0.0000	0.0132	0.0001	0.0007	0.0000
NBP[1]454*	0.0020	0.0000	0.0088	0.0001	0.0005	0.0000
NBP[1]480*	0.0013	0.0000	0.0059	0.0000	0.0003	0.0000
NBP[1]505*	0.0007	0.0000	0.0037	0.0000	0.0002	0.0000

* Specified by user.

Material Stream: Sep gas (continued)

Fluid Package: Basis-1
Property Package: Peng-Robinson

COMPOSITION

Vapour Phase (continued)

Phase Fraction 0.9998

COMPONENTS	MOLAR FLOW (kgmole/h)	MOLE FRACTION	MASS FLOW (tonne/d)	MASS FRACTION	LIQUID VOLUME FLOW (m3/h)	LIQUID VOLUME FRACTION
NBP[1]531*	0.0004	0.0000	0.0022	0.0000	0.0001	0.0000
NBP[1]557*	0.0002	0.0000	0.0013	0.0000	0.0001	0.0000
NBP[1]582*	0.0001	0.0000	0.0008	0.0000	0.0000	0.0000
NBP[1]608*	0.0001	0.0000	0.0004	0.0000	0.0000	0.0000
NBP[1]634*	0.0000	0.0000	0.0002	0.0000	0.0000	0.0000
NBP[1]659*	0.0000	0.0000	0.0001	0.0000	0.0000	0.0000
NBP[1]685*	0.0000	0.0000	0.0001	0.0000	0.0000	0.0000
NBP[1]711*	0.0000	0.0000	0.0000	0.0000	0.0000	0.0000
NBP[1]736*	0.0000	0.0000	0.0000	0.0000	0.0000	0.0000
NBP[1]762*	0.0000	0.0000	0.0000	0.0000	0.0000	0.0000
NBP[1]788*	0.0000	0.0000	0.0000	0.0000	0.0000	0.0000
NBP[1]825*	0.0000	0.0000	0.0000	0.0000	0.0000	0.0000
NBP[1]873*	0.0000	0.0000	0.0000	0.0000	0.0000	0.0000
NBP[1]926*	0.0000	0.0000	0.0000	0.0000	0.0000	0.0000
NBP[1]978*	0.0000	0.0000	0.0000	0.0000	0.0000	0.0000
NBP[1]1021*	0.0000	0.0000	0.0000	0.0000	0.0000	0.0000
NBP[1]1075*	0.0000	0.0000	0.0000	0.0000	0.0000	0.0000
NBP[1]1123*	0.0000	0.0000	0.0000	0.0000	0.0000	0.0000
NBP[1]1173*	0.0000	0.0000	0.0000	0.0000	0.0000	0.0000
NBP[1]1250*	0.0000	0.0000	0.0000	0.0000	0.0000	0.0000
NBP[1]1339*	0.0000	0.0000	0.0000	0.0000	0.0000	0.0000
NBP[1]1432*	0.0000	0.0000	0.0000	0.0000	0.0000	0.0000
NBP[1]1528*	0.0000	0.0000	0.0000	0.0000	0.0000	0.0000
NBP[1]1637*	0.0000	0.0000	0.0000	0.0000	0.0000	0.0000
NBP[1]1732*	0.0000	0.0000	0.0000	0.0000	0.0000	0.0000
NBP[1]1819*	0.0000	0.0000	0.0000	0.0000	0.0000	0.0000
NBP[1]1913*	0.0000	0.0000	0.0000	0.0000	0.0000	0.0000
Total	267.2482	1.0000	140.0842	1.0000	15.9853	1.0000

Liquid Phase

Phase Fraction 1.524e-004

COMPONENTS	MOLAR FLOW (kgmole/h)	MOLE FRACTION	MASS FLOW (tonne/d)	MASS FRACTION	LIQUID VOLUME FLOW (m3/h)	LIQUID VOLUME FRACTION
Methane	0.0121	0.2959	0.0046	0.0079	0.0006	0.0273
Ethane	0.0023	0.0576	0.0017	0.0029	0.0002	0.0084
Propane	0.0016	0.0398	0.0017	0.0029	0.0001	0.0060
i-Butane	0.0003	0.0065	0.0004	0.0006	0.0000	0.0012
n-Butane	0.0005	0.0131	0.0007	0.0013	0.0001	0.0022
i-Pentane	0.0001	0.0033	0.0002	0.0004	0.0000	0.0007
n-Pentane	0.0002	0.0037	0.0003	0.0004	0.0000	0.0007
n-Hexane	0.0003	0.0062	0.0005	0.0009	0.0000	0.0014
Nitrogen	0.0003	0.0080	0.0002	0.0004	0.0000	0.0005
CO2	0.0010	0.0253	0.0011	0.0018	0.0001	0.0023
H2S	0.0000	0.0000	0.0000	0.0000	0.0000	0.0000
H2O	0.0001	0.0020	0.0000	0.0001	0.0000	0.0001
NBP[1]95*	0.0000	0.0011	0.0001	0.0001	0.0000	0.0002
NBP[1]121*	0.0001	0.0013	0.0001	0.0002	0.0000	0.0002
NBP[1]147*	0.0001	0.0017	0.0001	0.0002	0.0000	0.0003
NBP[1]171*	0.0001	0.0033	0.0003	0.0005	0.0000	0.0007
NBP[1]195*	0.0002	0.0042	0.0004	0.0007	0.0000	0.0009
NBP[1]222*	0.0001	0.0030	0.0003	0.0005	0.0000	0.0007
NBP[1]248*	0.0001	0.0024	0.0002	0.0004	0.0000	0.0006
NBP[1]273*	0.0001	0.0018	0.0002	0.0003	0.0000	0.0005
NBP[1]299*	0.0001	0.0012	0.0001	0.0003	0.0000	0.0004
NBP[1]325*	0.0000	0.0008	0.0001	0.0002	0.0000	0.0002

* Specified by user.

Material Stream: Sep gas (continued)

Fluid Package: Basis-1
Property Package: Peng-Robinson

COMPOSITION

Liquid Phase (continued)

Phase Fraction 1.524e-004

COMPONENTS	MOLAR FLOW (kgmole/h)	MOLE FRACTION	MASS FLOW (tonne/d)	MASS FRACTION	LIQUID VOLUME FLOW (m3/h)	LIQUID VOLUME FRACTION
NBP[1]351*	0.0000	0.0006	0.0001	0.0001	0.0000	0.0002
NBP[1]377*	0.0000	0.0005	0.0001	0.0001	0.0000	0.0001
NBP[1]402*	0.0000	0.0004	0.0001	0.0001	0.0000	0.0001
NBP[1]428*	0.0000	0.0003	0.0000	0.0001	0.0000	0.0001
NBP[1]454*	0.0000	0.0002	0.0000	0.0001	0.0000	0.0001
NBP[1]480*	0.0000	0.0002	0.0000	0.0001	0.0000	0.0001
NBP[1]505*	0.0000	0.0002	0.0000	0.0001	0.0000	0.0001
NBP[1]531*	0.0000	0.0001	0.0000	0.0001	0.0000	0.0001
NBP[1]557*	0.0000	0.0001	0.0000	0.0000	0.0000	0.0001
NBP[1]582*	0.0000	0.0001	0.0000	0.0000	0.0000	0.0000
NBP[1]608*	0.0000	0.0001	0.0000	0.0000	0.0000	0.0000
NBP[1]634*	0.0000	0.0001	0.0000	0.0000	0.0000	0.0000
NBP[1]659*	0.0000	0.0000	0.0000	0.0000	0.0000	0.0000
NBP[1]685*	0.0000	0.0000	0.0000	0.0000	0.0000	0.0000
NBP[1]711*	0.0000	0.0000	0.0000	0.0000	0.0000	0.0000
NBP[1]736*	0.0000	0.0000	0.0000	0.0000	0.0000	0.0000
NBP[1]762*	0.0000	0.0000	0.0000	0.0000	0.0000	0.0000
NBP[1]788*	0.0000	0.0000	0.0000	0.0000	0.0000	0.0000
NBP[1]825*	0.0000	0.0000	0.0000	0.0000	0.0000	0.0000
NBP[1]873*	0.0000	0.0000	0.0000	0.0000	0.0000	0.0000
NBP[1]926*	0.0000	0.0000	0.0000	0.0000	0.0000	0.0000
NBP[1]978*	0.0000	0.0000	0.0000	0.0000	0.0000	0.0000
NBP[1]1021*	0.0000	0.0000	0.0000	0.0000	0.0000	0.0000
NBP[1]1075*	0.0000	0.0000	0.0000	0.0000	0.0000	0.0000
NBP[1]1123*	0.0000	0.0000	0.0000	0.0000	0.0000	0.0000
NBP[1]1173*	0.0000	0.0000	0.0000	0.0000	0.0000	0.0000
NBP[1]1250*	0.0000	0.0000	0.0000	0.0000	0.0000	0.0000
NBP[1]1339*	0.0000	0.0000	0.0000	0.0000	0.0000	0.0000
NBP[1]1432*	0.0000	0.0000	0.0000	0.0000	0.0000	0.0000
NBP[1]1528*	0.0000	0.0000	0.0000	0.0000	0.0000	0.0000
NBP[1]1637*	0.0000	0.0000	0.0000	0.0000	0.0000	0.0000
NBP[1]1732*	0.0001	0.0016	0.0017	0.0028	0.0001	0.0028
NBP[1]1819*	0.0097	0.2389	0.2590	0.4393	0.0101	0.4281
NBP[1]1913*	0.0112	0.2743	0.3148	0.5341	0.0121	0.5124
Total	0.0407	1.0000	0.5894	1.0000	0.0236	1.0000

Aqueous Phase

Phase Fraction 0.0000

COMPONENTS	MOLAR FLOW (kgmole/h)	MOLE FRACTION	MASS FLOW (tonne/d)	MASS FRACTION	LIQUID VOLUME FLOW (m3/h)	LIQUID VOLUME FRACTION
Methane	0.0000	0.0000	0.0000	0.0000	0.0000	0.0000
Ethane	0.0000	0.0000	0.0000	0.0000	0.0000	0.0000
Propane	0.0000	0.0000	0.0000	0.0000	0.0000	0.0000
i-Butane	0.0000	0.0000	0.0000	0.0000	0.0000	0.0000
n-Butane	0.0000	0.0000	0.0000	0.0000	0.0000	0.0000
i-Pentane	0.0000	0.0000	0.0000	0.0000	0.0000	0.0000
n-Pentane	0.0000	0.0000	0.0000	0.0000	0.0000	0.0000
n-Hexane	0.0000	0.0000	0.0000	0.0000	0.0000	0.0000
Nitrogen	0.0000	0.0000	0.0000	0.0000	0.0000	0.0000
CO2	0.0000	0.0005	0.0000	0.0013	0.0000	0.0016
H2S	0.0000	0.0000	0.0000	0.0000	0.0000	0.0000
H2O	0.0000	0.9995	0.0000	0.9987	0.0000	0.9984
NBP[1]95*	0.0000	0.0000	0.0000	0.0000	0.0000	0.0000
NBP[1]121*	0.0000	0.0000	0.0000	0.0000	0.0000	0.0000
NBP[1]147*	0.0000	0.0000	0.0000	0.0000	0.0000	0.0000

* Specified by user.

Material Stream: Sep gas (continued)

Fluid Package: Basis-1
Property Package: Peng-Robinson

COMPOSITION

Aqueous Phase (continued)

Phase Fraction 0.0000

COMPONENTS	MOLAR FLOW (kgmole/h)	MOLE FRACTION	MASS FLOW (tonne/d)	MASS FRACTION	LIQUID VOLUME FLOW (m3/h)	LIQUID VOLUME FRACTION
NBP[1]171*	0.0000	0.0000	0.0000	0.0000	0.0000	0.0000
NBP[1]195*	0.0000	0.0000	0.0000	0.0000	0.0000	0.0000
NBP[1]222*	0.0000	0.0000	0.0000	0.0000	0.0000	0.0000
NBP[1]248*	0.0000	0.0000	0.0000	0.0000	0.0000	0.0000
NBP[1]273*	0.0000	0.0000	0.0000	0.0000	0.0000	0.0000
NBP[1]299*	0.0000	0.0000	0.0000	0.0000	0.0000	0.0000
NBP[1]325*	0.0000	0.0000	0.0000	0.0000	0.0000	0.0000
NBP[1]351*	0.0000	0.0000	0.0000	0.0000	0.0000	0.0000
NBP[1]377*	0.0000	0.0000	0.0000	0.0000	0.0000	0.0000
NBP[1]402*	0.0000	0.0000	0.0000	0.0000	0.0000	0.0000
NBP[1]428*	0.0000	0.0000	0.0000	0.0000	0.0000	0.0000
NBP[1]454*	0.0000	0.0000	0.0000	0.0000	0.0000	0.0000
NBP[1]480*	0.0000	0.0000	0.0000	0.0000	0.0000	0.0000
NBP[1]505*	0.0000	0.0000	0.0000	0.0000	0.0000	0.0000
NBP[1]531*	0.0000	0.0000	0.0000	0.0000	0.0000	0.0000
NBP[1]557*	0.0000	0.0000	0.0000	0.0000	0.0000	0.0000
NBP[1]582*	0.0000	0.0000	0.0000	0.0000	0.0000	0.0000
NBP[1]608*	0.0000	0.0000	0.0000	0.0000	0.0000	0.0000
NBP[1]634*	0.0000	0.0000	0.0000	0.0000	0.0000	0.0000
NBP[1]659*	0.0000	0.0000	0.0000	0.0000	0.0000	0.0000
NBP[1]685*	0.0000	0.0000	0.0000	0.0000	0.0000	0.0000
NBP[1]711*	0.0000	0.0000	0.0000	0.0000	0.0000	0.0000
NBP[1]736*	0.0000	0.0000	0.0000	0.0000	0.0000	0.0000
NBP[1]762*	0.0000	0.0000	0.0000	0.0000	0.0000	0.0000
NBP[1]788*	0.0000	0.0000	0.0000	0.0000	0.0000	0.0000
NBP[1]825*	0.0000	0.0000	0.0000	0.0000	0.0000	0.0000
NBP[1]873*	0.0000	0.0000	0.0000	0.0000	0.0000	0.0000
NBP[1]926*	0.0000	0.0000	0.0000	0.0000	0.0000	0.0000
NBP[1]978*	0.0000	0.0000	0.0000	0.0000	0.0000	0.0000
NBP[1]1021*	0.0000	0.0000	0.0000	0.0000	0.0000	0.0000
NBP[1]1075*	0.0000	0.0000	0.0000	0.0000	0.0000	0.0000
NBP[1]1123*	0.0000	0.0000	0.0000	0.0000	0.0000	0.0000
NBP[1]1173*	0.0000	0.0000	0.0000	0.0000	0.0000	0.0000
NBP[1]1250*	0.0000	0.0000	0.0000	0.0000	0.0000	0.0000
NBP[1]1339*	0.0000	0.0000	0.0000	0.0000	0.0000	0.0000
NBP[1]1432*	0.0000	0.0000	0.0000	0.0000	0.0000	0.0000
NBP[1]1528*	0.0000	0.0000	0.0000	0.0000	0.0000	0.0000
NBP[1]1637*	0.0000	0.0000	0.0000	0.0000	0.0000	0.0000
NBP[1]1732*	0.0000	0.0000	0.0000	0.0000	0.0000	0.0000
NBP[1]1819*	0.0000	0.0000	0.0000	0.0000	0.0000	0.0000
NBP[1]1913*	0.0000	0.0000	0.0000	0.0000	0.0000	0.0000
Total	0.0000	1.0000	0.0000	1.0000	0.0000	1.0000

Material Stream: Sinjhoro plant

Fluid Package: Basis-1
Property Package: Peng-Robinson

CONDITIONS

		Overall	Vapour Phase	Liquid Phase	Aqueous Phase
Vapour / Phase Fraction		0.6673	0.6673	0.0613	0.2714
Temperature:	(F)	102.8	102.8	102.8	102.8
Pressure:	(psig)	1240	1240	1240	1240
Molar Flow	(MMSCFD)	7.874	5.254	0.4829	2.137
Mass Flow	(tonne/d)	237.5	135.2	56.30	46.06
Std Ideal Liq Vol Flow	(barrel/day)	3142	2350	501.5	290.4

* Specified by user.

Material Stream: Sinjhoro plant (continued)

Fluid Package: Basis-1
Property Package: Peng-Robinson

CONDITIONS

	Overall	Vapour Phase	Liquid Phase	Aqueous Phase
Molar Enthalpy (kJ/kgmole)	-1.519e+005	-9.031e+004	-2.335e+005	-2.850e+005
Molar Entropy (kJ/kgmole-C)	127.5	149.1	203.2	57.30
Heat Flow (MMBtu/hr)	-56.48	-22.40	-5.323	-28.75
Liq Vol Flow @Std Cond (barrel/day)	2.954e+005 *	9.302e+005	479.9	285.4

PROPERTIES

	Overall	Vapour Phase	Liquid Phase	Aqueous Phase
Molecular Weight	25.24	21.53	97.53	18.03
Molar Density (kgmole/m3)	5.950	4.312	7.305	55.42
Mass Density (kg/m3)	150.2	92.81	712.4	999.4
Act. Volume Flow (barrel/day)	9949	9162	497.0	289.9
Mass Enthalpy (kJ/kg)	-6020	-4195	-2394	-1.581e+004
Mass Entropy (kJ/kg-C)	5.051	6.925	2.083	3.178
Heat Capacity (kJ/kgmole-C)	73.94	60.30	206.4	77.55
Mass Heat Capacity (kJ/kg-C)	2.930	2.801	2.116	4.301
LHV Molar Basis (Std) (Btu/SCF)	---	---	---	6.560e-004
LHV Mass Basis (Std) (kJ/kg)	---	---	---	3.211e-002
Phase Fraction [Vol. Basis]	0.7480	0.7480	0.1596	9.242e-002
Phase Fraction [Mass Basis]	0.5691	0.5691	0.2370	0.1939
Partial Pressure of CO2 (psig)	27.31	---	---	---
Cost Based on Flow (Cost/s)	0.0000	0.0000	0.0000	0.0000
Act. Gas Flow (ACT_m3/h)	60.69	60.69	---	---
Avg. Liq. Density (kgmole/m3)	18.84	16.81	7.240	55.32
Specific Heat (kJ/kgmole-C)	73.94	60.30	206.4	77.55
Std. Gas Flow (STD_m3/h)	9272	6187	568.7	2517
Std. Ideal Liq. Mass Density (kg/m3)	475.5	361.8	706.1	997.6
Act. Liq. Flow (barrel/day)	786.9	---	497.0	289.9
Z Factor	---	0.7723	0.4558	6.008e-002
Watson K	15.58	17.21	12.20	8.487
User Property	---	---	---	---
Partial Pressure of H2S (psig)	-14.69	---	---	---
Cp/(Cp - R)	1.127	1.160	1.042	1.120
Cp/Cv	1.296	1.683	1.277	1.153
Heat of Vap. (kJ/kgmole)	6.371e+004	---	---	---
Kinematic Viscosity (cSt)	---	0.1598	2.749	0.6602
Liq. Mass Density (Std. Cond) (kg/m3)	5.058	0.9141	737.9	1015
Liq. Vol. Flow (Std. Cond) (barrel/day)	2.954e+005	9.302e+005	479.9	285.4
Liquid Fraction	0.3327	0.0000	1.000	1.000
Molar Volume (m3/kgmole)	0.1681	0.2319	0.1369	1.804e-002
Mass Heat of Vap. (kJ/kg)	2524	---	---	---
Phase Fraction [Molar Basis]	0.6673	0.6673	0.0613	0.2714
Surface Tension (dyne/cm)	---	---	11.01	69.56
Thermal Conductivity (W/m-K)	---	4.130e-002	8.916e-002	0.6307
Viscosity (cP)	---	1.483e-002	1.959	0.6598
Cv (Semi-Ideal) (kJ/kgmole-C)	65.63	51.99	198.0	69.24
Mass Cv (Semi-Ideal) (kJ/kg-C)	2.600	2.415	2.031	3.840
Cv (kJ/kgmole-C)	57.07	35.83	161.5	67.24
Mass Cv (kJ/kg-C)	2.261	1.664	1.656	3.729
Cv (Ent. Method) (kJ/kgmole-C)	---	---	172.3	66.53
Mass Cv (Ent. Method) (kJ/kg-C)	---	---	1.767	3.689
Cp/Cv (Ent. Method)	---	---	1.198	1.166
Reid VP at 37.8 C (psig)	3319	---	255.1	---
True VP at 37.8 C (psig)	6318	2770	1227	120.1
Liq. Vol. Flow - Sum(Std. Cond) (barrel/day)	9.310e+005	9.302e+005	479.9	285.4
HHV Molar Basis (Std) (Btu/SCF)	---	---	---	46.43
HHV Mass Basis (Std) (kJ/kg)	---	---	---	2273
CO2 Loading	---	---	---	---

* Specified by user.

Material Stream: Sinjhoro plant (continued)

Fluid Package: Basis-1
Property Package: Peng-Robinson

PROPERTIES

	Overall	Vapour Phase	Liquid Phase	Aqueous Phase
CO2 App ML Con (kgmole/m3)	---	---	0.1771	3.720e-002
CO2 App WT Con (kgmol/kg)	---	---	2.485e-004	3.722e-005
Phase Fraction [Act. Vol. Basis]	0.9209	0.9209	4.996e-002	2.914e-002
Mass Exergy (kJ/kg)	292.0	---	---	---
Viscosity Index	-28.79	---	---	---
Ideal Gas Cp/Cv	1.213	1.243	1.055	1.328
Ideal Gas Cp (kJ/kgmole-C)	47.40	42.58	160.7	33.66
Mass Ideal Gas Cp (kJ/kg-C)	1.878	1.978	1.648	1.867
Bubble Point Pressure (psig)	6298	---	---	---

COMPOSITION

Overall Phase

Vapour Fraction 0.6673

COMPONENTS	MOLAR FLOW (kgmole/h)	MOLE FRACTION	MASS FLOW (tonne/d)	MASS FRACTION	LIQUID VOLUME FLOW (m3/h)	LIQUID VOLUME FRACTION
Methane	207.0440	0.5280	79.7181	0.3356	11.0944	0.5330
Ethane	28.8006	0.0734	20.7848	0.0875	2.4348	0.1170
Propane	15.2677	0.0389	16.1583	0.0680	1.3288	0.0638
i-Butane	2.0287	0.0052	2.8300	0.0119	0.2098	0.0101
n-Butane	3.9513	0.0101	5.5120	0.0232	0.3938	0.0189
i-Pentane	0.8495	0.0022	1.4710	0.0062	0.0983	0.0047
n-Pentane	0.9602	0.0024	1.6627	0.0070	0.1100	0.0053
n-Hexane	1.4698	0.0037	3.0399	0.0128	0.1911	0.0092
Nitrogen	5.5989	0.0143	3.7642	0.0158	0.1945	0.0093
CO2	9.4151	0.0240	9.9445	0.0419	0.5020	0.0241
H2S	0.0006	0.0000	0.0005	0.0000	0.0000	0.0000
H2O	106.6990	0.2721	46.1326	0.1942	1.9261	0.0925
NBP[1]95*	0.2883	0.0007	0.4699	0.0020	0.0288	0.0014
NBP[1]121*	0.3381	0.0009	0.5912	0.0025	0.0358	0.0017
NBP[1]147*	0.4314	0.0011	0.8304	0.0035	0.0494	0.0024
NBP[1]171*	0.8224	0.0021	1.7306	0.0073	0.1013	0.0049
NBP[1]195*	1.0758	0.0027	2.4160	0.0102	0.1398	0.0067
NBP[1]222*	0.8003	0.0020	1.9331	0.0081	0.1105	0.0053
NBP[1]248*	0.6657	0.0017	1.7287	0.0073	0.0976	0.0047
NBP[1]273*	0.5358	0.0014	1.4881	0.0063	0.0831	0.0040
NBP[1]299*	0.4185	0.0011	1.2393	0.0052	0.0684	0.0033
NBP[1]325*	0.3029	0.0008	0.9528	0.0040	0.0521	0.0025
NBP[1]351*	0.2456	0.0006	0.8214	0.0035	0.0445	0.0021
NBP[1]377*	0.2247	0.0006	0.8014	0.0034	0.0429	0.0021
NBP[1]402*	0.2061	0.0005	0.7838	0.0033	0.0416	0.0020
NBP[1]428*	0.1961	0.0005	0.7956	0.0033	0.0418	0.0020
NBP[1]454*	0.1956	0.0005	0.8480	0.0036	0.0441	0.0021
NBP[1]480*	0.1982	0.0005	0.9182	0.0039	0.0473	0.0023
NBP[1]505*	0.1920	0.0005	0.9484	0.0040	0.0484	0.0023
NBP[1]531*	0.1852	0.0005	0.9740	0.0041	0.0492	0.0024
NBP[1]557*	0.1784	0.0005	0.9978	0.0042	0.0500	0.0024
NBP[1]582*	0.1706	0.0004	1.0132	0.0043	0.0503	0.0024
NBP[1]608*	0.1643	0.0004	1.0351	0.0044	0.0510	0.0025
NBP[1]634*	0.1611	0.0004	1.0753	0.0045	0.0526	0.0025
NBP[1]659*	0.1586	0.0004	1.1194	0.0047	0.0543	0.0026
NBP[1]685*	0.1641	0.0004	1.2227	0.0051	0.0588	0.0028
NBP[1]711*	0.1715	0.0004	1.3445	0.0057	0.0642	0.0031
NBP[1]736*	0.1697	0.0004	1.3915	0.0059	0.0659	0.0032
NBP[1]762*	0.1653	0.0004	1.4214	0.0060	0.0669	0.0032
NBP[1]788*	0.1585	0.0004	1.4424	0.0061	0.0674	0.0032
NBP[1]825*	0.2655	0.0007	2.5963	0.0109	0.1201	0.0058
NBP[1]873*	0.1830	0.0005	1.9404	0.0082	0.0887	0.0043

* Specified by user.

Material Stream: Sinjhoro plant (continued)

Fluid Package: Basis-1
Property Package: Peng-Robinson

COMPOSITION

Overall Phase (continued)

Vapour Fraction 0.6673

COMPONENTS	MOLAR FLOW (kgmole/h)	MOLE FRACTION	MASS FLOW (tonne/d)	MASS FRACTION	LIQUID VOLUME FLOW (m3/h)	LIQUID VOLUME FRACTION
NBP[1]926*	0.1437	0.0004	1.6472	0.0069	0.0744	0.0036
NBP[1]978*	0.1474	0.0004	1.8524	0.0078	0.0825	0.0040
NBP[1]1021*	0.0728	0.0002	0.9655	0.0041	0.0426	0.0020
NBP[1]1075*	0.0449	0.0001	0.6310	0.0027	0.0276	0.0013
NBP[1]1123*	0.0417	0.0001	0.6267	0.0026	0.0271	0.0013
NBP[1]1173*	0.0300	0.0001	0.4772	0.0020	0.0205	0.0010
NBP[1]1250*	0.0393	0.0001	0.6767	0.0028	0.0287	0.0014
NBP[1]1339*	0.0364	0.0001	0.6999	0.0029	0.0291	0.0014
NBP[1]1432*	0.0257	0.0001	0.5397	0.0023	0.0221	0.0011
NBP[1]1528*	0.0180	0.0000	0.4082	0.0017	0.0165	0.0008
NBP[1]1637*	0.0127	0.0000	0.3047	0.0013	0.0122	0.0006
NBP[1]1732*	0.0101	0.0000	0.2565	0.0011	0.0101	0.0005
NBP[1]1819*	0.0097	0.0000	0.2590	0.0011	0.0101	0.0005
NBP[1]1913*	0.0112	0.0000	0.3148	0.0013	0.0121	0.0006
Total	392.1623	1.0000	237.5489	1.0000	20.8162	1.0000

Vapour Phase

Phase Fraction 0.6673

COMPONENTS	MOLAR FLOW (kgmole/h)	MOLE FRACTION	MASS FLOW (tonne/d)	MASS FRACTION	LIQUID VOLUME FLOW (m3/h)	LIQUID VOLUME FRACTION
Methane	200.7596	0.7672	77.2984	0.5718	10.7576	0.6909
Ethane	26.4364	0.1010	19.0786	0.1411	2.2350	0.1435
Propane	12.7748	0.0488	13.5200	0.1000	1.1118	0.0714
i-Butane	1.5087	0.0058	2.1046	0.0156	0.1560	0.0100
n-Butane	2.7665	0.0106	3.8592	0.0285	0.2757	0.0177
i-Pentane	0.4845	0.0019	0.8389	0.0062	0.0561	0.0036
n-Pentane	0.5039	0.0019	0.8726	0.0065	0.0577	0.0037
n-Hexane	0.5113	0.0020	1.0574	0.0078	0.0665	0.0043
Nitrogen	5.5086	0.0211	3.7035	0.0274	0.1914	0.0123
CO2	8.7607	0.0335	9.2533	0.0684	0.4671	0.0300
H2S	0.0005	0.0000	0.0004	0.0000	0.0000	0.0000
H2O	0.3139	0.0012	0.1357	0.0010	0.0057	0.0004
NBP[1]95*	0.1520	0.0006	0.2478	0.0018	0.0152	0.0010
NBP[1]121*	0.1527	0.0006	0.2670	0.0020	0.0162	0.0010
NBP[1]147*	0.1615	0.0006	0.3109	0.0023	0.0185	0.0012
NBP[1]171*	0.2512	0.0010	0.5286	0.0039	0.0309	0.0020
NBP[1]195*	0.2619	0.0010	0.5882	0.0044	0.0340	0.0022
NBP[1]222*	0.1448	0.0006	0.3498	0.0026	0.0200	0.0013
NBP[1]248*	0.0883	0.0003	0.2294	0.0017	0.0130	0.0008
NBP[1]273*	0.0509	0.0002	0.1415	0.0010	0.0079	0.0005
NBP[1]299*	0.0279	0.0001	0.0825	0.0006	0.0046	0.0003
NBP[1]325*	0.0137	0.0001	0.0430	0.0003	0.0024	0.0002
NBP[1]351*	0.0074	0.0000	0.0246	0.0002	0.0013	0.0001
NBP[1]377*	0.0043	0.0000	0.0154	0.0001	0.0008	0.0001
NBP[1]402*	0.0025	0.0000	0.0096	0.0001	0.0005	0.0000
NBP[1]428*	0.0015	0.0000	0.0060	0.0000	0.0003	0.0000
NBP[1]454*	0.0009	0.0000	0.0039	0.0000	0.0002	0.0000
NBP[1]480*	0.0006	0.0000	0.0026	0.0000	0.0001	0.0000
NBP[1]505*	0.0003	0.0000	0.0016	0.0000	0.0001	0.0000
NBP[1]531*	0.0002	0.0000	0.0009	0.0000	0.0000	0.0000
NBP[1]557*	0.0001	0.0000	0.0005	0.0000	0.0000	0.0000
NBP[1]582*	0.0001	0.0000	0.0003	0.0000	0.0000	0.0000
NBP[1]608*	0.0000	0.0000	0.0002	0.0000	0.0000	0.0000
NBP[1]634*	0.0000	0.0000	0.0001	0.0000	0.0000	0.0000
NBP[1]659*	0.0000	0.0000	0.0001	0.0000	0.0000	0.0000

* Specified by user.

Material Stream: Sinjhoro plant (continued)

Fluid Package: Basis-1
Property Package: Peng-Robinson

COMPOSITION

Vapour Phase (continued)

Phase Fraction 0.6673

COMPONENTS	MOLAR FLOW (kgmole/h)	MOLE FRACTION	MASS FLOW (tonne/d)	MASS FRACTION	LIQUID VOLUME FLOW (m3/h)	LIQUID VOLUME FRACTION
NBP[1]685*	0.0000	0.0000	0.0000	0.0000	0.0000	0.0000
NBP[1]711*	0.0000	0.0000	0.0000	0.0000	0.0000	0.0000
NBP[1]736*	0.0000	0.0000	0.0000	0.0000	0.0000	0.0000
NBP[1]762*	0.0000	0.0000	0.0000	0.0000	0.0000	0.0000
NBP[1]788*	0.0000	0.0000	0.0000	0.0000	0.0000	0.0000
NBP[1]825*	0.0000	0.0000	0.0000	0.0000	0.0000	0.0000
NBP[1]873*	0.0000	0.0000	0.0000	0.0000	0.0000	0.0000
NBP[1]926*	0.0000	0.0000	0.0000	0.0000	0.0000	0.0000
NBP[1]978*	0.0000	0.0000	0.0000	0.0000	0.0000	0.0000
NBP[1]1021*	0.0000	0.0000	0.0000	0.0000	0.0000	0.0000
NBP[1]1075*	0.0000	0.0000	0.0000	0.0000	0.0000	0.0000
NBP[1]1123*	0.0000	0.0000	0.0000	0.0000	0.0000	0.0000
NBP[1]1173*	0.0000	0.0000	0.0000	0.0000	0.0000	0.0000
NBP[1]1250*	0.0000	0.0000	0.0000	0.0000	0.0000	0.0000
NBP[1]1339*	0.0000	0.0000	0.0000	0.0000	0.0000	0.0000
NBP[1]1432*	0.0000	0.0000	0.0000	0.0000	0.0000	0.0000
NBP[1]1528*	0.0000	0.0000	0.0000	0.0000	0.0000	0.0000
NBP[1]1637*	0.0000	0.0000	0.0000	0.0000	0.0000	0.0000
NBP[1]1732*	0.0015	0.0000	0.0371	0.0003	0.0015	0.0001
NBP[1]1819*	0.0097	0.0000	0.2590	0.0019	0.0101	0.0006
NBP[1]1913*	0.0112	0.0000	0.3148	0.0023	0.0121	0.0008
Total	261.6746	1.0000	135.1879	1.0000	15.5704	1.0000

Liquid Phase

Phase Fraction 6.133e-002

COMPONENTS	MOLAR FLOW (kgmole/h)	MOLE FRACTION	MASS FLOW (tonne/d)	MASS FRACTION	LIQUID VOLUME FLOW (m3/h)	LIQUID VOLUME FRACTION
Methane	6.2843	0.2613	2.4196	0.0430	0.3367	0.1014
Ethane	2.3642	0.0983	1.7062	0.0303	0.1999	0.0602
Propane	2.4929	0.1036	2.6383	0.0469	0.2170	0.0653
i-Butane	0.5200	0.0216	0.7254	0.0129	0.0538	0.0162
n-Butane	1.1848	0.0493	1.6528	0.0294	0.1181	0.0355
i-Pentane	0.3650	0.0152	0.6321	0.0112	0.0422	0.0127
n-Pentane	0.4563	0.0190	0.7902	0.0140	0.0523	0.0157
n-Hexane	0.9585	0.0399	1.9825	0.0352	0.1247	0.0375
Nitrogen	0.0882	0.0037	0.0593	0.0011	0.0031	0.0009
CO2	0.5830	0.0242	0.6158	0.0109	0.0311	0.0094
H2S	0.0001	0.0000	0.0001	0.0000	0.0000	0.0000
H2O	0.0223	0.0009	0.0096	0.0002	0.0004	0.0001
NBP[1]95*	0.1363	0.0057	0.2222	0.0039	0.0136	0.0041
NBP[1]121*	0.1854	0.0077	0.3241	0.0058	0.0196	0.0059
NBP[1]147*	0.2699	0.0112	0.5195	0.0092	0.0309	0.0093
NBP[1]171*	0.5712	0.0238	1.2020	0.0214	0.0704	0.0212
NBP[1]195*	0.8139	0.0338	1.8278	0.0325	0.1058	0.0318
NBP[1]222*	0.6555	0.0273	1.5833	0.0281	0.0905	0.0272
NBP[1]248*	0.5773	0.0240	1.4994	0.0266	0.0847	0.0255
NBP[1]273*	0.4849	0.0202	1.3466	0.0239	0.0752	0.0226
NBP[1]299*	0.3906	0.0162	1.1567	0.0205	0.0639	0.0192
NBP[1]325*	0.2892	0.0120	0.9097	0.0162	0.0497	0.0150
NBP[1]351*	0.2383	0.0099	0.7968	0.0142	0.0431	0.0130
NBP[1]377*	0.2204	0.0092	0.7860	0.0140	0.0421	0.0127
NBP[1]402*	0.2036	0.0085	0.7743	0.0138	0.0411	0.0124
NBP[1]428*	0.1946	0.0081	0.7895	0.0140	0.0415	0.0125
NBP[1]454*	0.1947	0.0081	0.8441	0.0150	0.0439	0.0132
NBP[1]480*	0.1976	0.0082	0.9156	0.0163	0.0471	0.0142

* Specified by user.

Material Stream: Sinjhoro plant (continued)

Fluid Package: Basis-1
Property Package: Peng-Robinson

COMPOSITION

Liquid Phase (continued)

Phase Fraction 6.133e-002

COMPONENTS	MOLAR FLOW (kgmole/h)	MOLE FRACTION	MASS FLOW (tonne/d)	MASS FRACTION	LIQUID VOLUME FLOW (m3/h)	LIQUID VOLUME FRACTION
NBP[1]505*	0.1917	0.0080	0.9468	0.0168	0.0483	0.0145
NBP[1]531*	0.1850	0.0077	0.9731	0.0173	0.0492	0.0148
NBP[1]557*	0.1783	0.0074	0.9973	0.0177	0.0500	0.0150
NBP[1]582*	0.1705	0.0071	1.0129	0.0180	0.0503	0.0152
NBP[1]608*	0.1643	0.0068	1.0349	0.0184	0.0510	0.0154
NBP[1]634*	0.1611	0.0067	1.0752	0.0191	0.0526	0.0158
NBP[1]659*	0.1586	0.0066	1.1194	0.0199	0.0543	0.0163
NBP[1]685*	0.1641	0.0068	1.2227	0.0217	0.0588	0.0177
NBP[1]711*	0.1715	0.0071	1.3445	0.0239	0.0642	0.0193
NBP[1]736*	0.1697	0.0071	1.3915	0.0247	0.0659	0.0198
NBP[1]762*	0.1653	0.0069	1.4214	0.0252	0.0669	0.0201
NBP[1]788*	0.1585	0.0066	1.4424	0.0256	0.0674	0.0203
NBP[1]825*	0.2655	0.0110	2.5963	0.0461	0.1201	0.0362
NBP[1]873*	0.1830	0.0076	1.9404	0.0345	0.0887	0.0267
NBP[1]926*	0.1437	0.0060	1.6472	0.0293	0.0744	0.0224
NBP[1]978*	0.1474	0.0061	1.8524	0.0329	0.0825	0.0248
NBP[1]1021*	0.0728	0.0030	0.9655	0.0171	0.0426	0.0128
NBP[1]1075*	0.0449	0.0019	0.6310	0.0112	0.0276	0.0083
NBP[1]1123*	0.0417	0.0017	0.6267	0.0111	0.0271	0.0082
NBP[1]1173*	0.0300	0.0012	0.4772	0.0085	0.0205	0.0062
NBP[1]1250*	0.0393	0.0016	0.6767	0.0120	0.0287	0.0086
NBP[1]1339*	0.0364	0.0015	0.6999	0.0124	0.0291	0.0088
NBP[1]1432*	0.0257	0.0011	0.5397	0.0096	0.0221	0.0067
NBP[1]1528*	0.0180	0.0007	0.4082	0.0073	0.0165	0.0050
NBP[1]1637*	0.0127	0.0005	0.3047	0.0054	0.0122	0.0037
NBP[1]1732*	0.0087	0.0004	0.2194	0.0039	0.0087	0.0026
NBP[1]1819*	0.0000	0.0000	0.0000	0.0000	0.0000	0.0000
NBP[1]1913*	0.0000	0.0000	0.0000	0.0000	0.0000	0.0000
Total	24.0513	1.0000	56.2968	1.0000	3.3219	1.0000

Aqueous Phase

Phase Fraction 0.2714

COMPONENTS	MOLAR FLOW (kgmole/h)	MOLE FRACTION	MASS FLOW (tonne/d)	MASS FRACTION	LIQUID VOLUME FLOW (m3/h)	LIQUID VOLUME FRACTION
Methane	0.0001	0.0000	0.0000	0.0000	0.0000	0.0000
Ethane	0.0000	0.0000	0.0000	0.0000	0.0000	0.0000
Propane	0.0000	0.0000	0.0000	0.0000	0.0000	0.0000
i-Butane	0.0000	0.0000	0.0000	0.0000	0.0000	0.0000
n-Butane	0.0000	0.0000	0.0000	0.0000	0.0000	0.0000
i-Pentane	0.0000	0.0000	0.0000	0.0000	0.0000	0.0000
n-Pentane	0.0000	0.0000	0.0000	0.0000	0.0000	0.0000
n-Hexane	0.0000	0.0000	0.0000	0.0000	0.0000	0.0000
Nitrogen	0.0020	0.0000	0.0014	0.0000	0.0001	0.0000
CO2	0.0714	0.0007	0.0755	0.0016	0.0038	0.0020
H2S	0.0000	0.0000	0.0000	0.0000	0.0000	0.0000
H2O	106.3628	0.9993	45.9873	0.9983	1.9200	0.9980
NBP[1]95*	0.0000	0.0000	0.0000	0.0000	0.0000	0.0000
NBP[1]121*	0.0000	0.0000	0.0000	0.0000	0.0000	0.0000
NBP[1]147*	0.0000	0.0000	0.0000	0.0000	0.0000	0.0000
NBP[1]171*	0.0000	0.0000	0.0000	0.0000	0.0000	0.0000
NBP[1]195*	0.0000	0.0000	0.0000	0.0000	0.0000	0.0000
NBP[1]222*	0.0000	0.0000	0.0000	0.0000	0.0000	0.0000
NBP[1]248*	0.0000	0.0000	0.0000	0.0000	0.0000	0.0000
NBP[1]273*	0.0000	0.0000	0.0000	0.0000	0.0000	0.0000
NBP[1]299*	0.0000	0.0000	0.0000	0.0000	0.0000	0.0000

* Specified by user.

Material Stream: Sinjhoro plant (continued)

Fluid Package: Basis-1
Property Package: Peng-Robinson

COMPOSITION

Aqueous Phase (continued)

Phase Fraction 0.2714

COMPONENTS	MOLAR FLOW (kgmole/h)	MOLE FRACTION	MASS FLOW (tonne/d)	MASS FRACTION	LIQUID VOLUME FLOW (m3/h)	LIQUID VOLUME FRACTION
NBP[1]325*	0.0000	0.0000	0.0000	0.0000	0.0000	0.0000
NBP[1]351*	0.0000	0.0000	0.0000	0.0000	0.0000	0.0000
NBP[1]377*	0.0000	0.0000	0.0000	0.0000	0.0000	0.0000
NBP[1]402*	0.0000	0.0000	0.0000	0.0000	0.0000	0.0000
NBP[1]428*	0.0000	0.0000	0.0000	0.0000	0.0000	0.0000
NBP[1]454*	0.0000	0.0000	0.0000	0.0000	0.0000	0.0000
NBP[1]480*	0.0000	0.0000	0.0000	0.0000	0.0000	0.0000
NBP[1]505*	0.0000	0.0000	0.0000	0.0000	0.0000	0.0000
NBP[1]531*	0.0000	0.0000	0.0000	0.0000	0.0000	0.0000
NBP[1]557*	0.0000	0.0000	0.0000	0.0000	0.0000	0.0000
NBP[1]582*	0.0000	0.0000	0.0000	0.0000	0.0000	0.0000
NBP[1]608*	0.0000	0.0000	0.0000	0.0000	0.0000	0.0000
NBP[1]634*	0.0000	0.0000	0.0000	0.0000	0.0000	0.0000
NBP[1]659*	0.0000	0.0000	0.0000	0.0000	0.0000	0.0000
NBP[1]685*	0.0000	0.0000	0.0000	0.0000	0.0000	0.0000
NBP[1]711*	0.0000	0.0000	0.0000	0.0000	0.0000	0.0000
NBP[1]736*	0.0000	0.0000	0.0000	0.0000	0.0000	0.0000
NBP[1]762*	0.0000	0.0000	0.0000	0.0000	0.0000	0.0000
NBP[1]788*	0.0000	0.0000	0.0000	0.0000	0.0000	0.0000
NBP[1]825*	0.0000	0.0000	0.0000	0.0000	0.0000	0.0000
NBP[1]873*	0.0000	0.0000	0.0000	0.0000	0.0000	0.0000
NBP[1]926*	0.0000	0.0000	0.0000	0.0000	0.0000	0.0000
NBP[1]978*	0.0000	0.0000	0.0000	0.0000	0.0000	0.0000
NBP[1]1021*	0.0000	0.0000	0.0000	0.0000	0.0000	0.0000
NBP[1]1075*	0.0000	0.0000	0.0000	0.0000	0.0000	0.0000
NBP[1]1123*	0.0000	0.0000	0.0000	0.0000	0.0000	0.0000
NBP[1]1173*	0.0000	0.0000	0.0000	0.0000	0.0000	0.0000
NBP[1]1250*	0.0000	0.0000	0.0000	0.0000	0.0000	0.0000
NBP[1]1339*	0.0000	0.0000	0.0000	0.0000	0.0000	0.0000
NBP[1]1432*	0.0000	0.0000	0.0000	0.0000	0.0000	0.0000
NBP[1]1528*	0.0000	0.0000	0.0000	0.0000	0.0000	0.0000
NBP[1]1637*	0.0000	0.0000	0.0000	0.0000	0.0000	0.0000
NBP[1]1732*	0.0000	0.0000	0.0000	0.0000	0.0000	0.0000
NBP[1]1819*	0.0000	0.0000	0.0000	0.0000	0.0000	0.0000
NBP[1]1913*	0.0000	0.0000	0.0000	0.0000	0.0000	0.0000
Total	106.4364	1.0000	46.0642	1.0000	1.9239	1.0000

Material Stream: Water-PRD

Fluid Package: Basis-1
Property Package: Peng-Robinson

CONDITIONS

		Overall				
Vapour / Phase Fraction		---				
Temperature:	(F)	---				
Pressure:	(psig)	450.0 *				
Molar Flow	(MMSCFD)	2.142				
Mass Flow	(tonne/d)	46.13				
Std Ideal Liq Vol Flow	(barrel/day)	290.7				
Molar Enthalpy	(kJ/kgmole)	---				
Molar Entropy	(kJ/kgmole-C)	---				
Heat Flow	(MMBtu/hr)	---				
Liq Vol Flow @Std Cond	(barrel/day)	285.9 *				

* Specified by user.

Material Stream: Water-PRD (continued)

Fluid Package: Basis-1
Property Package: Peng-Robinson

PROPERTIES

		Overall				
Molecular Weight		18.02				
Molar Density	(kgmole/m3)	---				
Mass Density	(kg/m3)	---				
Act. Volume Flow	(barrel/day)	---				
Mass Enthalpy	(kJ/kg)	---				
Mass Entropy	(kJ/kg-C)	---				
Heat Capacity	(kJ/kgmole-C)	---				
Mass Heat Capacity	(kJ/kg-C)	---				
LHV Molar Basis (Std)	(Btu/SCF)	0.0000				
LHV Mass Basis (Std)	(kJ/kg)	0.0000				
Phase Fraction [Vol. Basis]		0.0000				
Phase Fraction [Mass Basis]		0.0000				
Partial Pressure of CO2	(psig)	-14.70				
Cost Based on Flow	(Cost/s)	0.0000				
Act. Gas Flow	(ACT_m3/h)	---				
Avg. Liq. Density	(kgmole/m3)	55.40				
Specific Heat	(kJ/kgmole-C)	---				
Std. Gas Flow	(STD_m3/h)	2523				
Std. Ideal Liq. Mass Density	(kg/m3)	998.0				
Act. Liq. Flow	(barrel/day)	---				
Z Factor		---				
Watson K		---				
User Property		---				
Partial Pressure of H2S	(psig)	-14.70				
Cp/(Cp - R)		---				
Cp/Cv		---				
Heat of Vap.	(kJ/kgmole)	---				
Kinematic Viscosity	(cSt)	---				
Liq. Mass Density (Std. Cond)	(kg/m3)	1015				
Liq. Vol. Flow (Std. Cond)	(barrel/day)	285.9				
Liquid Fraction		---				
Molar Volume	(m3/kgmole)	---				
Mass Heat of Vap.	(kJ/kg)	---				
Phase Fraction [Molar Basis]		---				
Surface Tension	(dyne/cm)	---				
Thermal Conductivity	(W/m-K)	---				
Viscosity	(cP)	---				
Cv (Semi-Ideal)	(kJ/kgmole-C)	---				
Mass Cv (Semi-Ideal)	(kJ/kg-C)	---				
Cv	(kJ/kgmole-C)	---				
Mass Cv	(kJ/kg-C)	---				
Cv (Ent. Method)	(kJ/kgmole-C)	---				
Mass Cv (Ent. Method)	(kJ/kg-C)	---				
Cp/Cv (Ent. Method)		---				
Reid VP at 37.8 C	(psig)	---				
True VP at 37.8 C	(psig)	---				
Liq. Vol. Flow - Sum(Std. Cond)	(barrel/day)	0.0000				
HHV Molar Basis (Std)	(Btu/SCF)	46.46				
HHV Mass Basis (Std)	(kJ/kg)	2276				
CO2 Loading		---				
CO2 App ML Con	(kgmole/m3)	---				
CO2 App WT Con	(kgmol/kg)	0.0000				
Phase Fraction [Act. Vol. Basis]		0.0000				
Mass Exergy	(kJ/kg)	9.753e+006				
Viscosity Index		---				
Ideal Gas Cp/Cv		1.000				
Ideal Gas Cp	(kJ/kgmole-C)	1.170e+007				

* Specified by user.

Material Stream: Water-PRD (continued)

Fluid Package: Basis-1
Property Package: Peng-Robinson

PROPERTIES

	Overall				
Mass Ideal Gas Cp (kJ/kg-C)	6.496e+005				
Bubble Point Pressure (psig)	---				

COMPOSITION

Overall Phase

Vapour Fraction ---

COMPONENTS	MOLAR FLOW (kgmole/h)	MOLE FRACTION	MASS FLOW (tonne/d)	MASS FRACTION	LIQUID VOLUME FLOW (m3/h)	LIQUID VOLUME FRACTION
Methane	0.0000 *	0.0000 *	0.0000 *	0.0000 *	0.0000 *	0.0000 *
Ethane	0.0000 *	0.0000 *	0.0000 *	0.0000 *	0.0000 *	0.0000 *
Propane	0.0000 *	0.0000 *	0.0000 *	0.0000 *	0.0000 *	0.0000 *
i-Butane	0.0000 *	0.0000 *	0.0000 *	0.0000 *	0.0000 *	0.0000 *
n-Butane	0.0000 *	0.0000 *	0.0000 *	0.0000 *	0.0000 *	0.0000 *
i-Pentane	0.0000 *	0.0000 *	0.0000 *	0.0000 *	0.0000 *	0.0000 *
n-Pentane	0.0000 *	0.0000 *	0.0000 *	0.0000 *	0.0000 *	0.0000 *
n-Hexane	0.0000 *	0.0000 *	0.0000 *	0.0000 *	0.0000 *	0.0000 *
Nitrogen	0.0000 *	0.0000 *	0.0000 *	0.0000 *	0.0000 *	0.0000 *
CO2	0.0000 *	0.0000 *	0.0000 *	0.0000 *	0.0000 *	0.0000 *
H2S	0.0000 *	0.0000 *	0.0000 *	0.0000 *	0.0000 *	0.0000 *
H2O	106.6873 *	1.0000 *	46.1276 *	1.0000 *	1.9259 *	1.0000 *
NBP[1]95*	0.0000 *	0.0000 *	0.0000 *	0.0000 *	0.0000 *	0.0000 *
NBP[1]121*	0.0000 *	0.0000 *	0.0000 *	0.0000 *	0.0000 *	0.0000 *
NBP[1]147*	0.0000 *	0.0000 *	0.0000 *	0.0000 *	0.0000 *	0.0000 *
NBP[1]171*	0.0000 *	0.0000 *	0.0000 *	0.0000 *	0.0000 *	0.0000 *
NBP[1]195*	0.0000 *	0.0000 *	0.0000 *	0.0000 *	0.0000 *	0.0000 *
NBP[1]222*	0.0000 *	0.0000 *	0.0000 *	0.0000 *	0.0000 *	0.0000 *
NBP[1]248*	0.0000 *	0.0000 *	0.0000 *	0.0000 *	0.0000 *	0.0000 *
NBP[1]273*	0.0000 *	0.0000 *	0.0000 *	0.0000 *	0.0000 *	0.0000 *
NBP[1]299*	0.0000 *	0.0000 *	0.0000 *	0.0000 *	0.0000 *	0.0000 *
NBP[1]325*	0.0000 *	0.0000 *	0.0000 *	0.0000 *	0.0000 *	0.0000 *
NBP[1]351*	0.0000 *	0.0000 *	0.0000 *	0.0000 *	0.0000 *	0.0000 *
NBP[1]377*	0.0000 *	0.0000 *	0.0000 *	0.0000 *	0.0000 *	0.0000 *
NBP[1]402*	0.0000 *	0.0000 *	0.0000 *	0.0000 *	0.0000 *	0.0000 *
NBP[1]428*	0.0000 *	0.0000 *	0.0000 *	0.0000 *	0.0000 *	0.0000 *
NBP[1]454*	0.0000 *	0.0000 *	0.0000 *	0.0000 *	0.0000 *	0.0000 *
NBP[1]480*	0.0000 *	0.0000 *	0.0000 *	0.0000 *	0.0000 *	0.0000 *
NBP[1]505*	0.0000 *	0.0000 *	0.0000 *	0.0000 *	0.0000 *	0.0000 *
NBP[1]531*	0.0000 *	0.0000 *	0.0000 *	0.0000 *	0.0000 *	0.0000 *
NBP[1]557*	0.0000 *	0.0000 *	0.0000 *	0.0000 *	0.0000 *	0.0000 *
NBP[1]582*	0.0000 *	0.0000 *	0.0000 *	0.0000 *	0.0000 *	0.0000 *
NBP[1]608*	0.0000 *	0.0000 *	0.0000 *	0.0000 *	0.0000 *	0.0000 *
NBP[1]634*	0.0000 *	0.0000 *	0.0000 *	0.0000 *	0.0000 *	0.0000 *
NBP[1]659*	0.0000 *	0.0000 *	0.0000 *	0.0000 *	0.0000 *	0.0000 *
NBP[1]685*	0.0000 *	0.0000 *	0.0000 *	0.0000 *	0.0000 *	0.0000 *
NBP[1]711*	0.0000 *	0.0000 *	0.0000 *	0.0000 *	0.0000 *	0.0000 *
NBP[1]736*	0.0000 *	0.0000 *	0.0000 *	0.0000 *	0.0000 *	0.0000 *
NBP[1]762*	0.0000 *	0.0000 *	0.0000 *	0.0000 *	0.0000 *	0.0000 *
NBP[1]788*	0.0000 *	0.0000 *	0.0000 *	0.0000 *	0.0000 *	0.0000 *
NBP[1]825*	0.0000 *	0.0000 *	0.0000 *	0.0000 *	0.0000 *	0.0000 *
NBP[1]873*	0.0000 *	0.0000 *	0.0000 *	0.0000 *	0.0000 *	0.0000 *
NBP[1]926*	0.0000 *	0.0000 *	0.0000 *	0.0000 *	0.0000 *	0.0000 *
NBP[1]978*	0.0000 *	0.0000 *	0.0000 *	0.0000 *	0.0000 *	0.0000 *
NBP[1]1021*	0.0000 *	0.0000 *	0.0000 *	0.0000 *	0.0000 *	0.0000 *
NBP[1]1075*	0.0000 *	0.0000 *	0.0000 *	0.0000 *	0.0000 *	0.0000 *
NBP[1]1123*	0.0000 *	0.0000 *	0.0000 *	0.0000 *	0.0000 *	0.0000 *
NBP[1]1173*	0.0000 *	0.0000 *	0.0000 *	0.0000 *	0.0000 *	0.0000 *
NBP[1]1250*	0.0000 *	0.0000 *	0.0000 *	0.0000 *	0.0000 *	0.0000 *

Licensed to: PETROCHEMICAL ENGINEERIN
* Specified by user.

Material Stream: Water-PRD (continued)

Fluid Package: Basis-1
Property Package: Peng-Robinson

COMPOSITION

Overall Phase (continued)

Vapour Fraction ---

COMPONENTS	MOLAR FLOW (kgmole/h)	MOLE FRACTION	MASS FLOW (tonne/d)	MASS FRACTION	LIQUID VOLUME FLOW (m3/h)	LIQUID VOLUME FRACTION
NBP[1]1339*	0.0000 *	0.0000 *	0.0000 *	0.0000 *	0.0000 *	0.0000 *
NBP[1]1432*	0.0000 *	0.0000 *	0.0000 *	0.0000 *	0.0000 *	0.0000 *
NBP[1]1528*	0.0000 *	0.0000 *	0.0000 *	0.0000 *	0.0000 *	0.0000 *
NBP[1]1637*	0.0000 *	0.0000 *	0.0000 *	0.0000 *	0.0000 *	0.0000 *
NBP[1]1732*	0.0000 *	0.0000 *	0.0000 *	0.0000 *	0.0000 *	0.0000 *
NBP[1]1819*	0.0000 *	0.0000 *	0.0000 *	0.0000 *	0.0000 *	0.0000 *
NBP[1]1913*	0.0000 *	0.0000 *	0.0000 *	0.0000 *	0.0000 *	0.0000 *
Total	106.6873	1.0000	46.1276	1.0000	1.9259	1.0000

* Specified by user.

ANNEXURE-D

MP Separation @ 650 psig with existing line heater

Case-2B

Pandhi		
Temperature	85.00	F
Pressure	450.0	psig
Molar Flow	7.874	MMSCFD
Phase - Molar Flow (Vapour Phase)	5.380	MMSCFD
Phase - Liq Vol Flow (Liquid Phase)	450.0	barrel/day
Phase - Liq Vol Flow (Aqueous Phase)	290.0	barrel/day

SPRDSHT-1-5		
FEED LPG CONTENT	24.50	tonne/d

SPRDSHT-3-3		
SEPARTOR GAS LPG CONTENT	22.07	tonne/d

SEP GAS		
Temperature	134.9	F
Pressure	640.0	psig
Molar Flow	5.461	MMSCFD

10		
Temperature	122.2	F
Pressure	20.00	psig
Molar Flow	9.757e-002	MMSCFD

permeate		
Temperature	100.0	F
Pressure	20.00	psig
Molar Flow	2.810	MMSCFD
HHV Molar Basis (Std)	800.0	Btu/SCF

SPRDSHT-13-2		
COMBINED GAS HHV	845.8	Btu/SCF

SPRDSHT-1		
FLASH GAS LPG CONTENT	1.626	tonne/d

11		
Actual Liquid Flow	351.1	barrel/day

SPRDSHT-3		
STABILIZED CONDENSATE LPG CONTENT	0.8032	tonne/d

7		
Temperature	135.0	F
Pressure	650.0	psig
Molar Flow	7.874	MMSCFD

Pandhi-Cond.		
Actual Liquid Flow	404.4	barrel/day

SPRDSHT-2		
SEPARATOR CONDENSATE LPG CONTENT	2.429	tonne/d

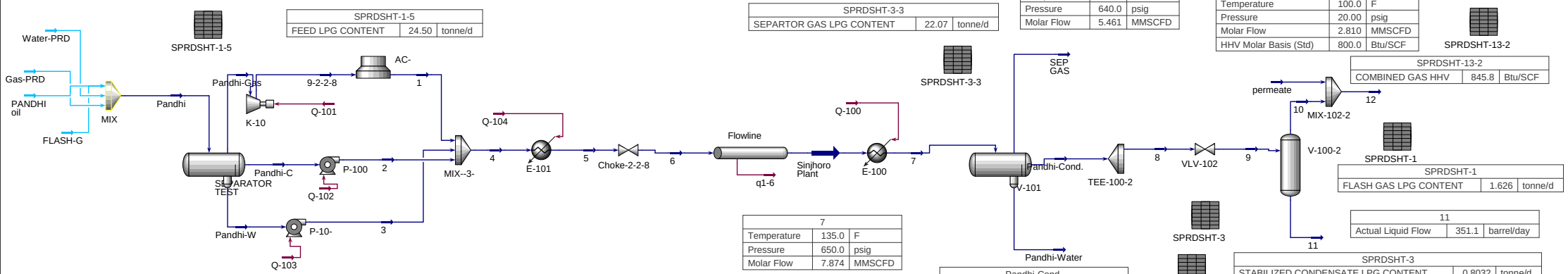

Petrochemical Engineering Consultants
Karachi, Pakistan

Case Name:	CASE-2B.hsc
Unit Set:	NewUser5e
Date/Time:	Fri Mar 20 18:22:45 2020

Material Stream: 1

Fluid Package: Basis-1
Property Package: Peng-Robinson

CONDITIONS

	Overall	Vapour Phase	Aqueous Phase
Vapour / Phase Fraction	0.9992	0.9992	0.0008
Temperature: (F)	89.00 *	89.00	89.00
Pressure: (psig)	2090	2090	2090
Molar Flow (MMSCFD)	5.381	5.377	4.470e-003
Mass Flow (tonne/d)	137.6	137.5	9.639e-002
Std Ideal Liq Vol Flow (barrel/day)	2403	2402	0.6078
Molar Enthalpy (kJ/kgmole)	-9.218e+004	-9.202e+004	-2.856e+005
Molar Entropy (kJ/kgmole-C)	139.7	139.8	55.33
Heat Flow (MMBtu/hr)	-23.42	-23.36	-6.026e-002
Liq Vol Flow @Std Cond (barrel/day)	9.528e+005 *	9.521e+005	0.5972

PROPERTIES

	Overall	Vapour Phase	Aqueous Phase
Molecular Weight	21.39	21.39	18.04
Molar Density (kgmole/m3)	8.289	8.283	55.82
Mass Density (kg/m3)	177.3	177.2	1007
Act. Volume Flow (barrel/day)	4881	4880	0.6021
Mass Enthalpy (kJ/kg)	-4311	-4302	-1.583e+004
Mass Entropy (kJ/kg-C)	6.534	6.536	3.067
Heat Capacity (kJ/kgmole-C)	72.28	72.28	77.41
Mass Heat Capacity (kJ/kg-C)	3.380	3.379	4.291
LHV Molar Basis (Std) (Btu/SCF)	---	---	6.218e-004
LHV Mass Basis (Std) (kJ/kg)	---	---	3.042e-002
Phase Fraction [Vol. Basis]	0.9997	0.9997	2.529e-004
Phase Fraction [Mass Basis]	0.9993	0.9993	7.007e-004
Partial Pressure of CO2 (psig)	57.08	---	---
Cost Based on Flow (Cost/s)	0.0000	0.0000	0.0000
Act. Gas Flow (ACT_m3/h)	32.33	32.33	---
Avg. Liq. Density (kgmole/m3)	16.84	16.83	55.29
Specific Heat (kJ/kgmole-C)	72.28	72.28	77.41
Std. Gas Flow (STD_m3/h)	6337	6332	5.264
Std. Ideal Liq. Mass Density (kg/m3)	360.1	359.9	997.5
Act. Liq. Flow (barrel/day)	0.6021	---	0.6021
Z Factor	---	0.6913	0.1026
Watson K	17.28	17.28	8.473
User Property	---	---	---
Partial Pressure of H2S (psig)	-14.69	---	---
Cp/(Cp - R)	1.130	1.130	1.120
Cp/Cv	1.988	1.989	1.149
Heat of Vap. (kJ/kgmole)	---	---	---
Kinematic Viscosity (cSt)	---	0.1150	0.7977
Liq. Mass Density (Std. Cond) (kg/m3)	0.9081	0.9082	1015
Liq. Vol. Flow (Std. Cond) (barrel/day)	9.528e+005	9.521e+005	0.5972
Liquid Fraction	8.306e-004	0.0000	1.000
Molar Volume (m3/kgmole)	0.1206	0.1207	1.791e-002
Mass Heat of Vap. (kJ/kg)	---	---	---
Phase Fraction [Molar Basis]	0.9992	0.9992	0.0008
Surface Tension (dyne/cm)	70.87	---	70.87
Thermal Conductivity (W/m-K)	---	5.535e-002	0.6196
Viscosity (cP)	---	2.037e-002	0.8033
Cv (Semi-Ideal) (kJ/kgmole-C)	63.97	63.96	69.10
Mass Cv (Semi-Ideal) (kJ/kg-C)	2.991	2.990	3.830
Cv (kJ/kgmole-C)	36.36	36.33	67.39
Mass Cv (kJ/kg-C)	1.700	1.699	3.735
Cv (Ent. Method) (kJ/kgmole-C)	37.47	36.33	66.85
Mass Cv (Ent. Method) (kJ/kg-C)	1.752	1.699	3.705
Cp/Cv (Ent. Method)	1.929	1.989	1.158

Licensed to: PETROCHEMICAL ENGINEERIN
* Specified by user.

Material Stream: 1 (continued)

Fluid Package: Basis-1
Property Package: Peng-Robinson

PROPERTIES

	Overall	Vapour Phase	Aqueous Phase		
Reid VP at 37.8 C (psig)	---	---	---		
True VP at 37.8 C (psig)	3607	---	176.8		
Liq. Vol. Flow - Sum(Std. Cond) (barrel/day)	9.521e+005	9.521e+005	0.5972		
HHV Molar Basis (Std) (Btu/SCF)	---	---	46.42		
HHV Mass Basis (Std) (kJ/kg)	---	---	2271		
CO2 Loading	---	---	---		
CO2 App ML Con (kgmole/m3)	---	---	5.413e-002		
CO2 App WT Con (kgmol/kg)	---	---	5.375e-005		
Phase Fraction [Act. Vol. Basis]	0.9999	0.9999	1.233e-004		
Mass Exergy (kJ/kg)	523.8	---	---		
Viscosity Index	---	---	---		
Ideal Gas Cp/Cv	1.248	1.248	1.329		
Ideal Gas Cp (kJ/kgmole-C)	41.87	41.87	33.62		
Mass Ideal Gas Cp (kJ/kg-C)	1.958	1.958	1.863		
Bubble Point Pressure (psig)	4590	---	---		

COMPOSITION

Overall Phase

Vapour Fraction 0.9992

COMPONENTS	MOLAR FLOW (kgmole/h)	MOLE FRACTION	MASS FLOW (tonne/d)	MASS FRACTION	LIQUID VOLUME FLOW (m3/h)	LIQUID VOLUME FRACTION
Methane	205.0219	0.7649	78.9395	0.5738	10.9860	0.6901
Ethane	27.6541	0.1032	19.9573	0.1451	2.3379	0.1469
Propane	13.5902	0.0507	14.3829	0.1046	1.1828	0.0743
i-Butane	1.5866	0.0059	2.2133	0.0161	0.1641	0.0103
n-Butane	2.8841	0.0108	4.0233	0.0292	0.2874	0.0181
i-Pentane	0.4635	0.0017	0.8025	0.0058	0.0536	0.0034
n-Pentane	0.4652	0.0017	0.8056	0.0059	0.0533	0.0033
n-Hexane	0.3694	0.0014	0.7639	0.0056	0.0480	0.0030
Nitrogen	5.5752	0.0208	3.7483	0.0272	0.1937	0.0122
CO2	9.1335	0.0341	9.6471	0.0701	0.4870	0.0306
H2S	0.0005	0.0000	0.0004	0.0000	0.0000	0.0000
H2O	0.3945	0.0015	0.1706	0.0012	0.0071	0.0004
NBP[1]95*	0.1425	0.0005	0.2323	0.0017	0.0142	0.0009
NBP[1]121*	0.1318	0.0005	0.2305	0.0017	0.0139	0.0009
NBP[1]147*	0.1254	0.0005	0.2414	0.0018	0.0144	0.0009
NBP[1]171*	0.1733	0.0006	0.3646	0.0027	0.0213	0.0013
NBP[1]195*	0.1579	0.0006	0.3546	0.0026	0.0205	0.0013
NBP[1]222*	0.0732	0.0003	0.1768	0.0013	0.0101	0.0006
NBP[1]248*	0.0375	0.0001	0.0974	0.0007	0.0055	0.0003
NBP[1]273*	0.0181	0.0001	0.0503	0.0004	0.0028	0.0002
NBP[1]299*	0.0083	0.0000	0.0245	0.0002	0.0014	0.0001
NBP[1]325*	0.0033	0.0000	0.0105	0.0001	0.0006	0.0000
NBP[1]351*	0.0015	0.0000	0.0050	0.0000	0.0003	0.0000
NBP[1]377*	0.0007	0.0000	0.0025	0.0000	0.0001	0.0000
NBP[1]402*	0.0003	0.0000	0.0013	0.0000	0.0001	0.0000
NBP[1]428*	0.0002	0.0000	0.0007	0.0000	0.0000	0.0000
NBP[1]454*	0.0001	0.0000	0.0003	0.0000	0.0000	0.0000
NBP[1]480*	0.0000	0.0000	0.0002	0.0000	0.0000	0.0000
NBP[1]505*	0.0000	0.0000	0.0001	0.0000	0.0000	0.0000
NBP[1]531*	0.0000	0.0000	0.0000	0.0000	0.0000	0.0000
NBP[1]557*	0.0000	0.0000	0.0000	0.0000	0.0000	0.0000
NBP[1]582*	0.0000	0.0000	0.0000	0.0000	0.0000	0.0000
NBP[1]608*	0.0000	0.0000	0.0000	0.0000	0.0000	0.0000
NBP[1]634*	0.0000	0.0000	0.0000	0.0000	0.0000	0.0000
NBP[1]659*	0.0000	0.0000	0.0000	0.0000	0.0000	0.0000
NBP[1]685*	0.0000	0.0000	0.0000	0.0000	0.0000	0.0000

* Specified by user.

Material Stream: 1 (continued)

Fluid Package: Basis-1
Property Package: Peng-Robinson

COMPOSITION

Overall Phase (continued)

Vapour Fraction 0.9992

COMPONENTS	MOLAR FLOW (kgmole/h)	MOLE FRACTION	MASS FLOW (tonne/d)	MASS FRACTION	LIQUID VOLUME FLOW (m3/h)	LIQUID VOLUME FRACTION
NBP[1]711*	0.0000	0.0000	0.0000	0.0000	0.0000	0.0000
NBP[1]736*	0.0000	0.0000	0.0000	0.0000	0.0000	0.0000
NBP[1]762*	0.0000	0.0000	0.0000	0.0000	0.0000	0.0000
NBP[1]788*	0.0000	0.0000	0.0000	0.0000	0.0000	0.0000
NBP[1]825*	0.0000	0.0000	0.0000	0.0000	0.0000	0.0000
NBP[1]873*	0.0000	0.0000	0.0000	0.0000	0.0000	0.0000
NBP[1]926*	0.0000	0.0000	0.0000	0.0000	0.0000	0.0000
NBP[1]978*	0.0000	0.0000	0.0000	0.0000	0.0000	0.0000
NBP[1]1021*	0.0000	0.0000	0.0000	0.0000	0.0000	0.0000
NBP[1]1075*	0.0000	0.0000	0.0000	0.0000	0.0000	0.0000
NBP[1]1123*	0.0000	0.0000	0.0000	0.0000	0.0000	0.0000
NBP[1]1173*	0.0000	0.0000	0.0000	0.0000	0.0000	0.0000
NBP[1]1250*	0.0000	0.0000	0.0000	0.0000	0.0000	0.0000
NBP[1]1339*	0.0000	0.0000	0.0000	0.0000	0.0000	0.0000
NBP[1]1432*	0.0000	0.0000	0.0000	0.0000	0.0000	0.0000
NBP[1]1528*	0.0000	0.0000	0.0000	0.0000	0.0000	0.0000
NBP[1]1637*	0.0000	0.0000	0.0000	0.0000	0.0000	0.0000
NBP[1]1732*	0.0000	0.0000	0.0000	0.0000	0.0000	0.0000
NBP[1]1819*	0.0001	0.0000	0.0029	0.0000	0.0001	0.0000
NBP[1]1913*	0.0112	0.0000	0.3148	0.0023	0.0121	0.0008
Total	268.0242	1.0000	137.5655	1.0000	15.9186	1.0000

Vapour Phase

Phase Fraction 0.9992

COMPONENTS	MOLAR FLOW (kgmole/h)	MOLE FRACTION	MASS FLOW (tonne/d)	MASS FRACTION	LIQUID VOLUME FLOW (m3/h)	LIQUID VOLUME FRACTION
Methane	205.0219	0.7656	78.9395	0.5742	10.9860	0.6903
Ethane	27.6541	0.1033	19.9573	0.1452	2.3379	0.1469
Propane	13.5902	0.0507	14.3829	0.1046	1.1828	0.0743
i-Butane	1.5866	0.0059	2.2133	0.0161	0.1641	0.0103
n-Butane	2.8841	0.0108	4.0233	0.0293	0.2874	0.0181
i-Pentane	0.4635	0.0017	0.8025	0.0058	0.0536	0.0034
n-Pentane	0.4652	0.0017	0.8056	0.0059	0.0533	0.0033
n-Hexane	0.3694	0.0014	0.7639	0.0056	0.0480	0.0030
Nitrogen	5.5752	0.0208	3.7483	0.0273	0.1937	0.0122
CO2	9.1333	0.0341	9.6469	0.0702	0.4870	0.0306
H2S	0.0005	0.0000	0.0004	0.0000	0.0000	0.0000
H2O	0.1721	0.0006	0.0744	0.0005	0.0031	0.0002
NBP[1]95*	0.1425	0.0005	0.2323	0.0017	0.0142	0.0009
NBP[1]121*	0.1318	0.0005	0.2305	0.0017	0.0139	0.0009
NBP[1]147*	0.1254	0.0005	0.2414	0.0018	0.0144	0.0009
NBP[1]171*	0.1733	0.0006	0.3646	0.0027	0.0213	0.0013
NBP[1]195*	0.1579	0.0006	0.3546	0.0026	0.0205	0.0013
NBP[1]222*	0.0732	0.0003	0.1768	0.0013	0.0101	0.0006
NBP[1]248*	0.0375	0.0001	0.0974	0.0007	0.0055	0.0003
NBP[1]273*	0.0181	0.0001	0.0503	0.0004	0.0028	0.0002
NBP[1]299*	0.0083	0.0000	0.0245	0.0002	0.0014	0.0001
NBP[1]325*	0.0033	0.0000	0.0105	0.0001	0.0006	0.0000
NBP[1]351*	0.0015	0.0000	0.0050	0.0000	0.0003	0.0000
NBP[1]377*	0.0007	0.0000	0.0025	0.0000	0.0001	0.0000
NBP[1]402*	0.0003	0.0000	0.0013	0.0000	0.0001	0.0000
NBP[1]428*	0.0002	0.0000	0.0007	0.0000	0.0000	0.0000
NBP[1]454*	0.0001	0.0000	0.0003	0.0000	0.0000	0.0000
NBP[1]480*	0.0000	0.0000	0.0002	0.0000	0.0000	0.0000
NBP[1]505*	0.0000	0.0000	0.0001	0.0000	0.0000	0.0000

* Specified by user.

Material Stream: 1 (continued)

Fluid Package: Basis-1
Property Package: Peng-Robinson

COMPOSITION

Vapour Phase (continued)

Phase Fraction 0.9992

COMPONENTS	MOLAR FLOW (kgmole/h)	MOLE FRACTION	MASS FLOW (tonne/d)	MASS FRACTION	LIQUID VOLUME FLOW (m3/h)	LIQUID VOLUME FRACTION
NBP[1]531*	0.0000	0.0000	0.0000	0.0000	0.0000	0.0000
NBP[1]557*	0.0000	0.0000	0.0000	0.0000	0.0000	0.0000
NBP[1]582*	0.0000	0.0000	0.0000	0.0000	0.0000	0.0000
NBP[1]608*	0.0000	0.0000	0.0000	0.0000	0.0000	0.0000
NBP[1]634*	0.0000	0.0000	0.0000	0.0000	0.0000	0.0000
NBP[1]659*	0.0000	0.0000	0.0000	0.0000	0.0000	0.0000
NBP[1]685*	0.0000	0.0000	0.0000	0.0000	0.0000	0.0000
NBP[1]711*	0.0000	0.0000	0.0000	0.0000	0.0000	0.0000
NBP[1]736*	0.0000	0.0000	0.0000	0.0000	0.0000	0.0000
NBP[1]762*	0.0000	0.0000	0.0000	0.0000	0.0000	0.0000
NBP[1]788*	0.0000	0.0000	0.0000	0.0000	0.0000	0.0000
NBP[1]825*	0.0000	0.0000	0.0000	0.0000	0.0000	0.0000
NBP[1]873*	0.0000	0.0000	0.0000	0.0000	0.0000	0.0000
NBP[1]926*	0.0000	0.0000	0.0000	0.0000	0.0000	0.0000
NBP[1]978*	0.0000	0.0000	0.0000	0.0000	0.0000	0.0000
NBP[1]1021*	0.0000	0.0000	0.0000	0.0000	0.0000	0.0000
NBP[1]1075*	0.0000	0.0000	0.0000	0.0000	0.0000	0.0000
NBP[1]1123*	0.0000	0.0000	0.0000	0.0000	0.0000	0.0000
NBP[1]1173*	0.0000	0.0000	0.0000	0.0000	0.0000	0.0000
NBP[1]1250*	0.0000	0.0000	0.0000	0.0000	0.0000	0.0000
NBP[1]1339*	0.0000	0.0000	0.0000	0.0000	0.0000	0.0000
NBP[1]1432*	0.0000	0.0000	0.0000	0.0000	0.0000	0.0000
NBP[1]1528*	0.0000	0.0000	0.0000	0.0000	0.0000	0.0000
NBP[1]1637*	0.0000	0.0000	0.0000	0.0000	0.0000	0.0000
NBP[1]1732*	0.0000	0.0000	0.0000	0.0000	0.0000	0.0000
NBP[1]1819*	0.0001	0.0000	0.0029	0.0000	0.0001	0.0000
NBP[1]1913*	0.0112	0.0000	0.3148	0.0023	0.0121	0.0008
Total	267.8016	1.0000	137.4691	1.0000	15.9145	1.0000

Aqueous Phase

Phase Fraction 8.306e-004

COMPONENTS	MOLAR FLOW (kgmole/h)	MOLE FRACTION	MASS FLOW (tonne/d)	MASS FRACTION	LIQUID VOLUME FLOW (m3/h)	LIQUID VOLUME FRACTION
Methane	0.0000	0.0000	0.0000	0.0000	0.0000	0.0000
Ethane	0.0000	0.0000	0.0000	0.0000	0.0000	0.0000
Propane	0.0000	0.0000	0.0000	0.0000	0.0000	0.0000
i-Butane	0.0000	0.0000	0.0000	0.0000	0.0000	0.0000
n-Butane	0.0000	0.0000	0.0000	0.0000	0.0000	0.0000
i-Pentane	0.0000	0.0000	0.0000	0.0000	0.0000	0.0000
n-Pentane	0.0000	0.0000	0.0000	0.0000	0.0000	0.0000
n-Hexane	0.0000	0.0000	0.0000	0.0000	0.0000	0.0000
Nitrogen	0.0000	0.0000	0.0000	0.0001	0.0000	0.0001
CO2	0.0002	0.0010	0.0002	0.0024	0.0000	0.0029
H2S	0.0000	0.0000	0.0000	0.0000	0.0000	0.0000
H2O	0.2224	0.9990	0.0962	0.9976	0.0040	0.9971
NBP[1]95*	0.0000	0.0000	0.0000	0.0000	0.0000	0.0000
NBP[1]121*	0.0000	0.0000	0.0000	0.0000	0.0000	0.0000
NBP[1]147*	0.0000	0.0000	0.0000	0.0000	0.0000	0.0000
NBP[1]171*	0.0000	0.0000	0.0000	0.0000	0.0000	0.0000
NBP[1]195*	0.0000	0.0000	0.0000	0.0000	0.0000	0.0000
NBP[1]222*	0.0000	0.0000	0.0000	0.0000	0.0000	0.0000
NBP[1]248*	0.0000	0.0000	0.0000	0.0000	0.0000	0.0000
NBP[1]273*	0.0000	0.0000	0.0000	0.0000	0.0000	0.0000
NBP[1]299*	0.0000	0.0000	0.0000	0.0000	0.0000	0.0000
NBP[1]325*	0.0000	0.0000	0.0000	0.0000	0.0000	0.0000

* Specified by user.

Material Stream: 1 (continued)

Fluid Package: Basis-1
Property Package: Peng-Robinson

COMPOSITION

Aqueous Phase (continued)

Phase Fraction 8.306e-004

COMPONENTS	MOLAR FLOW (kgmole/h)	MOLE FRACTION	MASS FLOW (tonne/d)	MASS FRACTION	LIQUID VOLUME FLOW (m3/h)	LIQUID VOLUME FRACTION
NBP[1]351*	0.0000	0.0000	0.0000	0.0000	0.0000	0.0000
NBP[1]377*	0.0000	0.0000	0.0000	0.0000	0.0000	0.0000
NBP[1]402*	0.0000	0.0000	0.0000	0.0000	0.0000	0.0000
NBP[1]428*	0.0000	0.0000	0.0000	0.0000	0.0000	0.0000
NBP[1]454*	0.0000	0.0000	0.0000	0.0000	0.0000	0.0000
NBP[1]480*	0.0000	0.0000	0.0000	0.0000	0.0000	0.0000
NBP[1]505*	0.0000	0.0000	0.0000	0.0000	0.0000	0.0000
NBP[1]531*	0.0000	0.0000	0.0000	0.0000	0.0000	0.0000
NBP[1]557*	0.0000	0.0000	0.0000	0.0000	0.0000	0.0000
NBP[1]582*	0.0000	0.0000	0.0000	0.0000	0.0000	0.0000
NBP[1]608*	0.0000	0.0000	0.0000	0.0000	0.0000	0.0000
NBP[1]634*	0.0000	0.0000	0.0000	0.0000	0.0000	0.0000
NBP[1]659*	0.0000	0.0000	0.0000	0.0000	0.0000	0.0000
NBP[1]685*	0.0000	0.0000	0.0000	0.0000	0.0000	0.0000
NBP[1]711*	0.0000	0.0000	0.0000	0.0000	0.0000	0.0000
NBP[1]736*	0.0000	0.0000	0.0000	0.0000	0.0000	0.0000
NBP[1]762*	0.0000	0.0000	0.0000	0.0000	0.0000	0.0000
NBP[1]788*	0.0000	0.0000	0.0000	0.0000	0.0000	0.0000
NBP[1]825*	0.0000	0.0000	0.0000	0.0000	0.0000	0.0000
NBP[1]873*	0.0000	0.0000	0.0000	0.0000	0.0000	0.0000
NBP[1]926*	0.0000	0.0000	0.0000	0.0000	0.0000	0.0000
NBP[1]978*	0.0000	0.0000	0.0000	0.0000	0.0000	0.0000
NBP[1]1021*	0.0000	0.0000	0.0000	0.0000	0.0000	0.0000
NBP[1]1075*	0.0000	0.0000	0.0000	0.0000	0.0000	0.0000
NBP[1]1123*	0.0000	0.0000	0.0000	0.0000	0.0000	0.0000
NBP[1]1173*	0.0000	0.0000	0.0000	0.0000	0.0000	0.0000
NBP[1]1250*	0.0000	0.0000	0.0000	0.0000	0.0000	0.0000
NBP[1]1339*	0.0000	0.0000	0.0000	0.0000	0.0000	0.0000
NBP[1]1432*	0.0000	0.0000	0.0000	0.0000	0.0000	0.0000
NBP[1]1528*	0.0000	0.0000	0.0000	0.0000	0.0000	0.0000
NBP[1]1637*	0.0000	0.0000	0.0000	0.0000	0.0000	0.0000
NBP[1]1732*	0.0000	0.0000	0.0000	0.0000	0.0000	0.0000
NBP[1]1819*	0.0000	0.0000	0.0000	0.0000	0.0000	0.0000
NBP[1]1913*	0.0000	0.0000	0.0000	0.0000	0.0000	0.0000
Total	0.2226	1.0000	0.0964	1.0000	0.0040	1.0000

Material Stream: 2

Fluid Package: Basis-1
Property Package: Peng-Robinson

CONDITIONS

		Overall	Liquid Phase	Liquid Phase		
Vapour / Phase Fraction		0.0000	0.0170	0.9830		
Temperature:	(F)	95.88	95.88	95.88		
Pressure:	(psig)	2090 *	2090	2090		
Molar Flow	(MMSCFD)	0.3574	6.079e-003	0.3513		
Mass Flow	(tonne/d)	53.98	3.654	50.33		
Std Ideal Liq Vol Flow	(barrel/day)	449.3	23.56	425.8		
Molar Enthalpy	(kJ/kgmole)	-2.850e+005	-1.060e+006	-2.716e+005		
Molar Entropy	(kJ/kgmole-C)	220.4	1098	205.3		
Heat Flow	(MMBtu/hr)	-4.808	-0.3044	-4.504		
Liq Vol Flow @Std Cond	(barrel/day)	434.3 *	23.73	410.6		

* Specified by user.

Material Stream: 2 (continued)

Fluid Package: Basis-1
Property Package: Peng-Robinson

PROPERTIES

		Overall	Liquid Phase	Liquid Phase		
Molecular Weight		126.4	502.8	119.8		
Molar Density	(kgmole/m3)	6.147	1.922	6.390		
Mass Density	(kg/m3)	776.7	966.5	765.7		
Act. Volume Flow	(barrel/day)	437.2	23.78	413.4		
Mass Enthalpy	(kJ/kg)	-2255	-2109	-2266		
Mass Entropy	(kJ/kg-C)	1.745	2.183	1.713		
Heat Capacity	(kJ/kgmole-C)	255.7	961.1	243.5		
Mass Heat Capacity	(kJ/kg-C)	2.024	1.911	2.032		
LHV Molar Basis (Std)	(Btu/SCF)	---	---	---		
LHV Mass Basis (Std)	(kJ/kg)	---	---	---		
Phase Fraction [Vol. Basis]		0.0000	5.243e-002	0.9476		
Phase Fraction [Mass Basis]		0.0000	6.769e-002	0.9323		
Partial Pressure of CO2	(psig)	-14.70	---	---		
Cost Based on Flow	(Cost/s)	0.0000	0.0000	0.0000		
Act. Gas Flow	(ACT_m3/h)	---	---	---		
Avg. Liq. Density	(kgmole/m3)	5.980	1.940	6.204		
Specific Heat	(kJ/kgmole-C)	255.7	961.1	243.5		
Std. Gas Flow	(STD_m3/h)	420.9	7.159	413.7		
Std. Ideal Liq. Mass Density	(kg/m3)	755.6	975.6	743.5		
Act. Liq. Flow	(barrel/day)	437.2	23.78	413.4		
Z Factor		---	2.942	0.8850		
Watson K		11.99	11.67	12.06		
User Property		---	---	---		
Partial Pressure of H2S	(psig)	-14.70	---	---		
Cp/(Cp - R)		1.034	1.009	1.035		
Cp/Cv		1.202	1.103	1.210		
Heat of Vap.	(kJ/kgmole)	---	---	---		
Kinematic Viscosity	(cSt)	1.244	537.4	1.048		
Liq. Mass Density (Std. Cond)	(kg/m3)	781.8	968.5	771.0		
Liq. Vol. Flow (Std. Cond)	(barrel/day)	434.3	23.73	410.6		
Liquid Fraction		1.000	1.000	1.000		
Molar Volume	(m3/kgmole)	0.1627	0.5203	0.1565		
Mass Heat of Vap.	(kJ/kg)	---	---	---		
Phase Fraction [Molar Basis]		0.0000	0.0170	0.9830		
Surface Tension	(dyne/cm)	---	20.30	15.38		
Thermal Conductivity	(W/m-K)	9.974e-002	0.1174	9.881e-002		
Viscosity	(cP)	1.244	519.4	0.8029		
Cv (Semi-Ideal)	(kJ/kgmole-C)	247.4	952.7	---		
Mass Cv (Semi-Ideal)	(kJ/kg-C)	1.958	1.895	---		
Cv	(kJ/kgmole-C)	212.7	871.2	---		
Mass Cv	(kJ/kg-C)	1.683	1.733	---		
Cv (Ent. Method)	(kJ/kgmole-C)	---	---	---		
Mass Cv (Ent. Method)	(kJ/kg-C)	---	---	---		
Cp/Cv (Ent. Method)		---	---	---		
Reid VP at 37.8 C	(psig)	97.87	26.74	100.9		
True VP at 37.8 C	(psig)	475.9	449.8	497.6		
Liq. Vol. Flow - Sum(Std. Cond)	(barrel/day)	23.73	23.73	0.0000		
HHV Molar Basis (Std)	(Btu/SCF)	---	---	---		
HHV Mass Basis (Std)	(kJ/kg)	---	---	---		
CO2 Loading		---	---	---		
CO2 App ML Con	(kgmole/m3)	8.263e-002	2.756e-002	8.580e-002		
CO2 App WT Con	(kgmol/kg)	1.064e-004	2.851e-005	1.120e-004		
Phase Fraction [Act. Vol. Basis]		0.0000	5.440e-002	0.9456		
Mass Exergy	(kJ/kg)	35.50	---	---		
Viscosity Index		32.55	---	---		
Ideal Gas Cp/Cv		1.043	1.010	1.045		
Ideal Gas Cp	(kJ/kgmole-C)	203.6	802.7	193.3		

* Specified by user.

Material Stream: 2 (continued)

Fluid Package: Basis-1
Property Package: Peng-Robinson

PROPERTIES

	Overall	Liquid Phase	Liquid Phase		
Mass Ideal Gas Cp (kJ/kg-C)	1.612	1.596	1.613		
Bubble Point Pressure (psig)	467.5	---	---		

COMPOSITION

Overall Phase

Vapour Fraction 0.0000

COMPONENTS	MOLAR FLOW (kgmole/h)	MOLE FRACTION	MASS FLOW (tonne/d)	MASS FRACTION	LIQUID VOLUME FLOW (m3/h)	LIQUID VOLUME FRACTION
Methane	2.0221	0.1136	0.7786	0.0144	0.1084	0.0364
Ethane	1.1465	0.0644	0.8274	0.0153	0.0969	0.0326
Propane	1.6775	0.0942	1.7753	0.0329	0.1460	0.0490
i-Butane	0.4420	0.0248	0.6166	0.0114	0.0457	0.0154
n-Butane	1.0672	0.0600	1.4887	0.0276	0.1064	0.0357
i-Pentane	0.3860	0.0217	0.6684	0.0124	0.0447	0.0150
n-Pentane	0.4950	0.0278	0.8571	0.0159	0.0567	0.0191
n-Hexane	1.1004	0.0618	2.2760	0.0422	0.1431	0.0481
Nitrogen	0.0228	0.0013	0.0153	0.0003	0.0008	0.0003
CO2	0.2393	0.0134	0.2527	0.0047	0.0128	0.0043
H2S	0.0000	0.0000	0.0000	0.0000	0.0000	0.0000
H2O	0.0107	0.0006	0.0046	0.0001	0.0002	0.0001
NBP[1]95*	0.1457	0.0082	0.2376	0.0044	0.0146	0.0049
NBP[1]121*	0.2063	0.0116	0.3606	0.0067	0.0218	0.0073
NBP[1]147*	0.3061	0.0172	0.5891	0.0109	0.0350	0.0118
NBP[1]171*	0.6492	0.0365	1.3660	0.0253	0.0800	0.0269
NBP[1]195*	0.9179	0.0516	2.0614	0.0382	0.1193	0.0401
NBP[1]222*	0.7271	0.0408	1.7563	0.0325	0.1004	0.0337
NBP[1]248*	0.6282	0.0353	1.6313	0.0302	0.0921	0.0309
NBP[1]273*	0.5177	0.0291	1.4378	0.0266	0.0803	0.0270
NBP[1]299*	0.4103	0.0230	1.2148	0.0225	0.0671	0.0225
NBP[1]325*	0.2995	0.0168	0.9422	0.0175	0.0515	0.0173
NBP[1]351*	0.2442	0.0137	0.8165	0.0151	0.0442	0.0148
NBP[1]377*	0.2240	0.0126	0.7989	0.0148	0.0428	0.0144
NBP[1]402*	0.2058	0.0116	0.7826	0.0145	0.0415	0.0139
NBP[1]428*	0.1959	0.0110	0.7949	0.0147	0.0417	0.0140
NBP[1]454*	0.1955	0.0110	0.8477	0.0157	0.0441	0.0148
NBP[1]480*	0.1981	0.0111	0.9180	0.0170	0.0473	0.0159
NBP[1]505*	0.1920	0.0108	0.9483	0.0176	0.0484	0.0162
NBP[1]531*	0.1852	0.0104	0.9740	0.0180	0.0492	0.0165
NBP[1]557*	0.1784	0.0100	0.9978	0.0185	0.0500	0.0168
NBP[1]582*	0.1706	0.0096	1.0132	0.0188	0.0503	0.0169
NBP[1]608*	0.1643	0.0092	1.0351	0.0192	0.0510	0.0171
NBP[1]634*	0.1611	0.0090	1.0753	0.0199	0.0526	0.0177
NBP[1]659*	0.1586	0.0089	1.1194	0.0207	0.0543	0.0182
NBP[1]685*	0.1641	0.0092	1.2227	0.0227	0.0588	0.0198
NBP[1]711*	0.1715	0.0096	1.3445	0.0249	0.0642	0.0216
NBP[1]736*	0.1697	0.0095	1.3915	0.0258	0.0659	0.0221
NBP[1]762*	0.1653	0.0093	1.4214	0.0263	0.0669	0.0225
NBP[1]788*	0.1585	0.0089	1.4424	0.0267	0.0674	0.0226
NBP[1]825*	0.2655	0.0149	2.5963	0.0481	0.1201	0.0404
NBP[1]873*	0.1830	0.0103	1.9404	0.0359	0.0887	0.0298
NBP[1]926*	0.1437	0.0081	1.6472	0.0305	0.0744	0.0250
NBP[1]978*	0.1474	0.0083	1.8524	0.0343	0.0825	0.0277
NBP[1]1021*	0.0728	0.0041	0.9655	0.0179	0.0426	0.0143
NBP[1]1075*	0.0449	0.0025	0.6310	0.0117	0.0276	0.0093
NBP[1]1123*	0.0417	0.0023	0.6267	0.0116	0.0271	0.0091
NBP[1]1173*	0.0300	0.0017	0.4772	0.0088	0.0205	0.0069
NBP[1]1250*	0.0393	0.0022	0.6767	0.0125	0.0287	0.0096

* Specified by user.

Material Stream: 2 (continued)

Fluid Package: Basis-1
Property Package: Peng-Robinson

COMPOSITION

Overall Phase (continued)

Vapour Fraction 0.0000

COMPONENTS	MOLAR FLOW (kgmole/h)	MOLE FRACTION	MASS FLOW (tonne/d)	MASS FRACTION	LIQUID VOLUME FLOW (m3/h)	LIQUID VOLUME FRACTION
NBP[1]1339*	0.0364	0.0020	0.6999	0.0130	0.0291	0.0098
NBP[1]1432*	0.0257	0.0014	0.5397	0.0100	0.0221	0.0074
NBP[1]1528*	0.0180	0.0010	0.4082	0.0076	0.0165	0.0055
NBP[1]1637*	0.0127	0.0007	0.3047	0.0056	0.0122	0.0041
NBP[1]1732*	0.0101	0.0006	0.2565	0.0048	0.0101	0.0034
NBP[1]1819*	0.0096	0.0005	0.2561	0.0047	0.0100	0.0034
NBP[1]1913*	0.0000	0.0000	0.0000	0.0000	0.0000	0.0000
Total	17.8012	1.0000	53.9808	1.0000	2.9766	1.0000

Liquid Phase

Phase Fraction 1.701e-002

COMPONENTS	MOLAR FLOW (kgmole/h)	MOLE FRACTION	MASS FLOW (tonne/d)	MASS FRACTION	LIQUID VOLUME FLOW (m3/h)	LIQUID VOLUME FRACTION
Methane	0.0348	0.1150	0.0134	0.0037	0.0019	0.0120
Ethane	0.0134	0.0442	0.0097	0.0026	0.0011	0.0073
Propane	0.0157	0.0517	0.0166	0.0045	0.0014	0.0087
i-Butane	0.0037	0.0124	0.0052	0.0014	0.0004	0.0025
n-Butane	0.0082	0.0271	0.0114	0.0031	0.0008	0.0052
i-Pentane	0.0027	0.0090	0.0047	0.0013	0.0003	0.0020
n-Pentane	0.0033	0.0108	0.0057	0.0015	0.0004	0.0024
n-Hexane	0.0064	0.0212	0.0133	0.0036	0.0008	0.0054
Nitrogen	0.0006	0.0021	0.0004	0.0001	0.0000	0.0001
CO2	0.0043	0.0143	0.0046	0.0013	0.0002	0.0015
H2S	0.0000	0.0000	0.0000	0.0000	0.0000	0.0000
H2O	0.0002	0.0006	0.0001	0.0000	0.0000	0.0000
NBP[1]95*	0.0009	0.0031	0.0015	0.0004	0.0001	0.0006
NBP[1]121*	0.0012	0.0041	0.0022	0.0006	0.0001	0.0008
NBP[1]147*	0.0017	0.0057	0.0033	0.0009	0.0002	0.0013
NBP[1]171*	0.0034	0.0113	0.0072	0.0020	0.0004	0.0027
NBP[1]195*	0.0046	0.0151	0.0103	0.0028	0.0006	0.0038
NBP[1]222*	0.0034	0.0114	0.0083	0.0023	0.0005	0.0030
NBP[1]248*	0.0028	0.0094	0.0074	0.0020	0.0004	0.0027
NBP[1]273*	0.0022	0.0074	0.0062	0.0017	0.0003	0.0022
NBP[1]299*	0.0017	0.0056	0.0050	0.0014	0.0003	0.0018
NBP[1]325*	0.0012	0.0040	0.0038	0.0010	0.0002	0.0013
NBP[1]351*	0.0009	0.0031	0.0032	0.0009	0.0002	0.0011
NBP[1]377*	0.0008	0.0028	0.0030	0.0008	0.0002	0.0010
NBP[1]402*	0.0007	0.0025	0.0028	0.0008	0.0002	0.0010
NBP[1]428*	0.0007	0.0023	0.0028	0.0008	0.0001	0.0009
NBP[1]454*	0.0007	0.0022	0.0029	0.0008	0.0002	0.0010
NBP[1]480*	0.0007	0.0022	0.0031	0.0008	0.0002	0.0010
NBP[1]505*	0.0006	0.0021	0.0031	0.0009	0.0002	0.0010
NBP[1]531*	0.0006	0.0020	0.0032	0.0009	0.0002	0.0010
NBP[1]557*	0.0006	0.0019	0.0032	0.0009	0.0002	0.0010
NBP[1]582*	0.0006	0.0018	0.0033	0.0009	0.0002	0.0010
NBP[1]608*	0.0005	0.0018	0.0034	0.0009	0.0002	0.0011
NBP[1]634*	0.0005	0.0018	0.0036	0.0010	0.0002	0.0011
NBP[1]659*	0.0005	0.0018	0.0038	0.0010	0.0002	0.0012
NBP[1]685*	0.0006	0.0019	0.0043	0.0012	0.0002	0.0013
NBP[1]711*	0.0006	0.0020	0.0049	0.0013	0.0002	0.0015
NBP[1]736*	0.0006	0.0021	0.0053	0.0015	0.0003	0.0016
NBP[1]762*	0.0007	0.0022	0.0058	0.0016	0.0003	0.0018
NBP[1]788*	0.0007	0.0023	0.0065	0.0018	0.0003	0.0019
NBP[1]825*	0.0014	0.0046	0.0137	0.0037	0.0006	0.0041
NBP[1]873*	0.0013	0.0043	0.0137	0.0037	0.0006	0.0040

* Specified by user.

Material Stream: 2 (continued)

Fluid Package: Basis-1
Property Package: Peng-Robinson

COMPOSITION

Liquid Phase (continued)

Phase Fraction 1.701e-002

COMPONENTS	MOLAR FLOW (kgmole/h)	MOLE FRACTION	MASS FLOW (tonne/d)	MASS FRACTION	LIQUID VOLUME FLOW (m3/h)	LIQUID VOLUME FRACTION
NBP[1]926*	0.0015	0.0051	0.0177	0.0048	0.0008	0.0051
NBP[1]978*	0.0024	0.0080	0.0303	0.0083	0.0014	0.0087
NBP[1]1021*	0.0021	0.0068	0.0273	0.0075	0.0012	0.0077
NBP[1]1075*	0.0030	0.0098	0.0418	0.0114	0.0018	0.0117
NBP[1]1123*	0.0060	0.0198	0.0902	0.0247	0.0039	0.0250
NBP[1]1173*	0.0108	0.0355	0.1711	0.0468	0.0073	0.0470
NBP[1]1250*	0.0337	0.1112	0.5795	0.1586	0.0246	0.1574
NBP[1]1339*	0.0361	0.1194	0.6954	0.1903	0.0290	0.1855
NBP[1]1432*	0.0257	0.0848	0.5397	0.1477	0.0221	0.1418
NBP[1]1528*	0.0180	0.0595	0.4082	0.1117	0.0165	0.1059
NBP[1]1637*	0.0127	0.0418	0.3047	0.0834	0.0122	0.0780
NBP[1]1732*	0.0101	0.0334	0.2565	0.0702	0.0101	0.0650
NBP[1]1819*	0.0096	0.0318	0.2561	0.0701	0.0100	0.0641
NBP[1]1913*	0.0000	0.0000	0.0000	0.0000	0.0000	0.0000
Total	0.3028	1.0000	3.6542	1.0000	0.1561	1.0000

Liquid Phase

Phase Fraction 0.9830

COMPONENTS	MOLAR FLOW (kgmole/h)	MOLE FRACTION	MASS FLOW (tonne/d)	MASS FRACTION	LIQUID VOLUME FLOW (m3/h)	LIQUID VOLUME FRACTION
Methane	1.9873	0.1136	0.7652	0.0152	0.1065	0.0378
Ethane	1.1332	0.0648	0.8178	0.0162	0.0958	0.0340
Propane	1.6618	0.0950	1.7588	0.0349	0.1446	0.0513
i-Butane	0.4383	0.0250	0.6114	0.0121	0.0453	0.0161
n-Butane	1.0590	0.0605	1.4773	0.0294	0.1055	0.0374
i-Pentane	0.3833	0.0219	0.6637	0.0132	0.0444	0.0157
n-Pentane	0.4917	0.0281	0.8515	0.0169	0.0563	0.0200
n-Hexane	1.0940	0.0625	2.2627	0.0450	0.1423	0.0504
Nitrogen	0.0222	0.0013	0.0149	0.0003	0.0008	0.0003
CO2	0.2349	0.0134	0.2482	0.0049	0.0125	0.0044
H2S	0.0000	0.0000	0.0000	0.0000	0.0000	0.0000
H2O	0.0105	0.0006	0.0045	0.0001	0.0002	0.0001
NBP[1]95*	0.1448	0.0083	0.2360	0.0047	0.0145	0.0051
NBP[1]121*	0.2050	0.0117	0.3585	0.0071	0.0217	0.0077
NBP[1]147*	0.3043	0.0174	0.5858	0.0116	0.0348	0.0123
NBP[1]171*	0.6458	0.0369	1.3588	0.0270	0.0795	0.0282
NBP[1]195*	0.9133	0.0522	2.0511	0.0408	0.1187	0.0421
NBP[1]222*	0.7237	0.0414	1.7480	0.0347	0.0999	0.0354
NBP[1]248*	0.6253	0.0357	1.6240	0.0323	0.0917	0.0325
NBP[1]273*	0.5155	0.0295	1.4316	0.0284	0.0799	0.0283
NBP[1]299*	0.4085	0.0233	1.2098	0.0240	0.0668	0.0237
NBP[1]325*	0.2983	0.0170	0.9385	0.0186	0.0513	0.0182
NBP[1]351*	0.2432	0.0139	0.8133	0.0162	0.0440	0.0156
NBP[1]377*	0.2232	0.0128	0.7959	0.0158	0.0426	0.0151
NBP[1]402*	0.2050	0.0117	0.7797	0.0155	0.0414	0.0147
NBP[1]428*	0.1952	0.0112	0.7921	0.0157	0.0416	0.0147
NBP[1]454*	0.1948	0.0111	0.8447	0.0168	0.0439	0.0156
NBP[1]480*	0.1975	0.0113	0.9149	0.0182	0.0471	0.0167
NBP[1]505*	0.1913	0.0109	0.9451	0.0188	0.0482	0.0171
NBP[1]531*	0.1846	0.0106	0.9708	0.0193	0.0491	0.0174
NBP[1]557*	0.1778	0.0102	0.9946	0.0198	0.0498	0.0177
NBP[1]582*	0.1700	0.0097	1.0099	0.0201	0.0502	0.0178
NBP[1]608*	0.1637	0.0094	1.0317	0.0205	0.0508	0.0180
NBP[1]634*	0.1606	0.0092	1.0718	0.0213	0.0524	0.0186
NBP[1]659*	0.1581	0.0090	1.1156	0.0222	0.0541	0.0192

* Specified by user.

Material Stream: 2 (continued)

Fluid Package: Basis-1
Property Package: Peng-Robinson

COMPOSITION

Liquid Phase (continued)

Phase Fraction 0.9830

COMPONENTS	MOLAR FLOW (kgmole/h)	MOLE FRACTION	MASS FLOW (tonne/d)	MASS FRACTION	LIQUID VOLUME FLOW (m3/h)	LIQUID VOLUME FRACTION
NBP[1]685*	0.1635	0.0093	1.2185	0.0242	0.0586	0.0208
NBP[1]711*	0.1709	0.0098	1.3396	0.0266	0.0639	0.0227
NBP[1]736*	0.1691	0.0097	1.3862	0.0275	0.0657	0.0233
NBP[1]762*	0.1646	0.0094	1.4156	0.0281	0.0666	0.0236
NBP[1]788*	0.1578	0.0090	1.4359	0.0285	0.0671	0.0238
NBP[1]825*	0.2641	0.0151	2.5826	0.0513	0.1195	0.0424
NBP[1]873*	0.1817	0.0104	1.9267	0.0383	0.0881	0.0312
NBP[1]926*	0.1422	0.0081	1.6295	0.0324	0.0736	0.0261
NBP[1]978*	0.1449	0.0083	1.8221	0.0362	0.0811	0.0288
NBP[1]1021*	0.0708	0.0040	0.9382	0.0186	0.0414	0.0147
NBP[1]1075*	0.0419	0.0024	0.5892	0.0117	0.0258	0.0091
NBP[1]1123*	0.0357	0.0020	0.5365	0.0107	0.0232	0.0082
NBP[1]1173*	0.0192	0.0011	0.3061	0.0061	0.0131	0.0047
NBP[1]1250*	0.0056	0.0003	0.0972	0.0019	0.0041	0.0015
NBP[1]1339*	0.0002	0.0000	0.0045	0.0001	0.0002	0.0001
NBP[1]1432*	0.0000	0.0000	0.0000	0.0000	0.0000	0.0000
NBP[1]1528*	0.0000	0.0000	0.0000	0.0000	0.0000	0.0000
NBP[1]1637*	0.0000	0.0000	0.0000	0.0000	0.0000	0.0000
NBP[1]1732*	0.0000	0.0000	0.0000	0.0000	0.0000	0.0000
NBP[1]1819*	0.0000	0.0000	0.0000	0.0000	0.0000	0.0000
NBP[1]1913*	0.0000	0.0000	0.0000	0.0000	0.0000	0.0000
Total	17.4984	1.0000	50.3266	1.0000	2.8205	1.0000

Material Stream: 3

Fluid Package: Basis-1
Property Package: Peng-Robinson

CONDITIONS

		Overall	Aqueous Phase
Vapour / Phase Fraction		0.0000	1.0000
Temperature:	(F)	86.60	86.60
Pressure:	(psig)	2090 *	2090
Molar Flow	(MMSCFD)	2.135	2.135
Mass Flow	(tonne/d)	46.00	46.00
Std Ideal Liq Vol Flow	(barrel/day)	290.0	290.0
Molar Enthalpy	(kJ/kgmole)	-2.856e+005	-2.856e+005
Molar Entropy	(kJ/kgmole-C)	54.92	54.92
Heat Flow	(MMBtu/hr)	-28.79	-28.79
Liq Vol Flow @Std Cond	(barrel/day)	285.1 *	285.1

PROPERTIES

		Overall	Aqueous Phase
Molecular Weight		18.03	18.03
Molar Density	(kgmole/m3)	55.91	55.91
Mass Density	(kg/m3)	1008	1008
Act. Volume Flow	(barrel/day)	287.1	287.1
Mass Enthalpy	(kJ/kg)	-1.584e+004	-1.584e+004
Mass Entropy	(kJ/kg-C)	3.047	3.047
Heat Capacity	(kJ/kgmole-C)	77.42	77.42
Mass Heat Capacity	(kJ/kg-C)	4.295	4.295
LHV Molar Basis (Std)	(Btu/SCF)	1.809e-004	1.809e-004
LHV Mass Basis (Std)	(kJ/kg)	8.858e-003	8.858e-003
Phase Fraction [Vol. Basis]		0.0000	1.000
Phase Fraction [Mass Basis]		0.0000	1.000
Partial Pressure of CO2	(psig)	-14.70	---

* Specified by user.

Material Stream: 3 (continued)

Fluid Package: Basis-1
Property Package: Peng-Robinson

PROPERTIES

	Overall	Aqueous Phase
Cost Based on Flow (Cost/s)	0.0000	0.0000
Act. Gas Flow (ACT_m3/h)	---	---
Avg. Liq. Density (kgmole/m3)	55.35	55.35
Specific Heat (kJ/kgmole-C)	77.42	77.42
Std. Gas Flow (STD_m3/h)	2514	2514
Std. Ideal Liq. Mass Density (kg/m3)	997.8	997.8
Act. Liq. Flow (barrel/day)	287.1	287.1
Z Factor	0.1029	0.1029
Watson K	8.497	8.497
User Property	---	---
Partial Pressure of H2S (psig)	-14.70	---
Cp/(Cp - R)	1.120	1.120
Cp/Cv	1.148	1.148
Heat of Vap. (kJ/kgmole)	1.881e+004	---
Kinematic Viscosity (cSt)	0.7854	0.7854
Liq. Mass Density (Std. Cond) (kg/m3)	1015	1015
Liq. Vol. Flow (Std. Cond) (barrel/day)	285.1	285.1
Liquid Fraction	1.000	1.000
Molar Volume (m3/kgmole)	1.789e-002	1.789e-002
Mass Heat of Vap. (kJ/kg)	1044	---
Phase Fraction [Molar Basis]	0.0000	1.0000
Surface Tension (dyne/cm)	71.15	71.15
Thermal Conductivity (W/m-K)	0.6187	0.6187
Viscosity (cP)	0.7916	0.7916
Cv (Semi-Ideal) (kJ/kgmole-C)	69.10	69.10
Mass Cv (Semi-Ideal) (kJ/kg-C)	3.834	3.834
Cv (kJ/kgmole-C)	67.44	67.44
Mass Cv (kJ/kg-C)	3.741	3.741
Cv (Ent. Method) (kJ/kgmole-C)	66.91	66.91
Mass Cv (Ent. Method) (kJ/kg-C)	3.712	3.712
Cp/Cv (Ent. Method)	1.157	1.157
Reid VP at 37.8 C (psig)	---	---
True VP at 37.8 C (psig)	17.11	17.11
Liq. Vol. Flow - Sum(Std. Cond) (barrel/day)	285.1	285.1
HHV Molar Basis (Std) (Btu/SCF)	46.45	46.45
HHV Mass Basis (Std) (kJ/kg)	2274	2274
CO2 Loading	---	---
CO2 App ML Con (kgmole/m3)	2.222e-002	2.222e-002
CO2 App WT Con (kgmol/kg)	2.204e-005	2.204e-005
Phase Fraction [Act. Vol. Basis]	0.0000	1.000
Mass Exergy (kJ/kg)	17.16	---
Viscosity Index	-0.2852	---
Ideal Gas Cp/Cv	1.329	1.329
Ideal Gas Cp (kJ/kgmole-C)	33.61	33.61
Mass Ideal Gas Cp (kJ/kg-C)	1.864	1.864
Bubble Point Pressure (psig)	13.01	---

COMPOSITION

Overall Phase

Vapour Fraction 0.0000

COMPONENTS	MOLAR FLOW (kgmole/h)	MOLE FRACTION	MASS FLOW (tonne/d)	MASS FRACTION	LIQUID VOLUME FLOW (m3/h)	LIQUID VOLUME FRACTION
Methane	0.0000	0.0000	0.0000	0.0000	0.0000	0.0000
Ethane	0.0000	0.0000	0.0000	0.0000	0.0000	0.0000
Propane	0.0000	0.0000	0.0000	0.0000	0.0000	0.0000
i-Butane	0.0000	0.0000	0.0000	0.0000	0.0000	0.0000
n-Butane	0.0000	0.0000	0.0000	0.0000	0.0000	0.0000

* Specified by user.

Material Stream: 3 (continued)

Fluid Package: Basis-1
Property Package: Peng-Robinson

COMPOSITION

Overall Phase (continued)

Vapour Fraction 0.0000

COMPONENTS	MOLAR FLOW (kgmole/h)	MOLE FRACTION	MASS FLOW (tonne/d)	MASS FRACTION	LIQUID VOLUME FLOW (m3/h)	LIQUID VOLUME FRACTION
i-Pentane	0.0000	0.0000	0.0000	0.0000	0.0000	0.0000
n-Pentane	0.0000	0.0000	0.0000	0.0000	0.0000	0.0000
n-Hexane	0.0000	0.0000	0.0000	0.0000	0.0000	0.0000
Nitrogen	0.0008	0.0000	0.0006	0.0000	0.0000	0.0000
CO2	0.0423	0.0004	0.0446	0.0010	0.0023	0.0012
H2S	0.0000	0.0000	0.0000	0.0000	0.0000	0.0000
H2O	106.2938	0.9996	45.9575	0.9990	1.9188	0.9988
NBP[1]95*	0.0000	0.0000	0.0000	0.0000	0.0000	0.0000
NBP[1]121*	0.0000	0.0000	0.0000	0.0000	0.0000	0.0000
NBP[1]147*	0.0000	0.0000	0.0000	0.0000	0.0000	0.0000
NBP[1]171*	0.0000	0.0000	0.0000	0.0000	0.0000	0.0000
NBP[1]195*	0.0000	0.0000	0.0000	0.0000	0.0000	0.0000
NBP[1]222*	0.0000	0.0000	0.0000	0.0000	0.0000	0.0000
NBP[1]248*	0.0000	0.0000	0.0000	0.0000	0.0000	0.0000
NBP[1]273*	0.0000	0.0000	0.0000	0.0000	0.0000	0.0000
NBP[1]299*	0.0000	0.0000	0.0000	0.0000	0.0000	0.0000
NBP[1]325*	0.0000	0.0000	0.0000	0.0000	0.0000	0.0000
NBP[1]351*	0.0000	0.0000	0.0000	0.0000	0.0000	0.0000
NBP[1]377*	0.0000	0.0000	0.0000	0.0000	0.0000	0.0000
NBP[1]402*	0.0000	0.0000	0.0000	0.0000	0.0000	0.0000
NBP[1]428*	0.0000	0.0000	0.0000	0.0000	0.0000	0.0000
NBP[1]454*	0.0000	0.0000	0.0000	0.0000	0.0000	0.0000
NBP[1]480*	0.0000	0.0000	0.0000	0.0000	0.0000	0.0000
NBP[1]505*	0.0000	0.0000	0.0000	0.0000	0.0000	0.0000
NBP[1]531*	0.0000	0.0000	0.0000	0.0000	0.0000	0.0000
NBP[1]557*	0.0000	0.0000	0.0000	0.0000	0.0000	0.0000
NBP[1]582*	0.0000	0.0000	0.0000	0.0000	0.0000	0.0000
NBP[1]608*	0.0000	0.0000	0.0000	0.0000	0.0000	0.0000
NBP[1]634*	0.0000	0.0000	0.0000	0.0000	0.0000	0.0000
NBP[1]659*	0.0000	0.0000	0.0000	0.0000	0.0000	0.0000
NBP[1]685*	0.0000	0.0000	0.0000	0.0000	0.0000	0.0000
NBP[1]711*	0.0000	0.0000	0.0000	0.0000	0.0000	0.0000
NBP[1]736*	0.0000	0.0000	0.0000	0.0000	0.0000	0.0000
NBP[1]762*	0.0000	0.0000	0.0000	0.0000	0.0000	0.0000
NBP[1]788*	0.0000	0.0000	0.0000	0.0000	0.0000	0.0000
NBP[1]825*	0.0000	0.0000	0.0000	0.0000	0.0000	0.0000
NBP[1]873*	0.0000	0.0000	0.0000	0.0000	0.0000	0.0000
NBP[1]926*	0.0000	0.0000	0.0000	0.0000	0.0000	0.0000
NBP[1]978*	0.0000	0.0000	0.0000	0.0000	0.0000	0.0000
NBP[1]1021*	0.0000	0.0000	0.0000	0.0000	0.0000	0.0000
NBP[1]1075*	0.0000	0.0000	0.0000	0.0000	0.0000	0.0000
NBP[1]1123*	0.0000	0.0000	0.0000	0.0000	0.0000	0.0000
NBP[1]1173*	0.0000	0.0000	0.0000	0.0000	0.0000	0.0000
NBP[1]1250*	0.0000	0.0000	0.0000	0.0000	0.0000	0.0000
NBP[1]1339*	0.0000	0.0000	0.0000	0.0000	0.0000	0.0000
NBP[1]1432*	0.0000	0.0000	0.0000	0.0000	0.0000	0.0000
NBP[1]1528*	0.0000	0.0000	0.0000	0.0000	0.0000	0.0000
NBP[1]1637*	0.0000	0.0000	0.0000	0.0000	0.0000	0.0000
NBP[1]1732*	0.0000	0.0000	0.0000	0.0000	0.0000	0.0000
NBP[1]1819*	0.0000	0.0000	0.0000	0.0000	0.0000	0.0000
NBP[1]1913*	0.0000	0.0000	0.0000	0.0000	0.0000	0.0000
Total	106.3369	1.0000	46.0026	1.0000	1.9210	1.0000

* Specified by user.

Material Stream: 3 (continued)

Fluid Package: Basis-1
Property Package: Peng-Robinson

COMPOSITION

Aqueous Phase

Phase Fraction 1.000

COMPONENTS	MOLAR FLOW (kgmole/h)	MOLE FRACTION	MASS FLOW (tonne/d)	MASS FRACTION	LIQUID VOLUME FLOW (m3/h)	LIQUID VOLUME FRACTION
Methane	0.0000	0.0000	0.0000	0.0000	0.0000	0.0000
Ethane	0.0000	0.0000	0.0000	0.0000	0.0000	0.0000
Propane	0.0000	0.0000	0.0000	0.0000	0.0000	0.0000
i-Butane	0.0000	0.0000	0.0000	0.0000	0.0000	0.0000
n-Butane	0.0000	0.0000	0.0000	0.0000	0.0000	0.0000
i-Pentane	0.0000	0.0000	0.0000	0.0000	0.0000	0.0000
n-Pentane	0.0000	0.0000	0.0000	0.0000	0.0000	0.0000
n-Hexane	0.0000	0.0000	0.0000	0.0000	0.0000	0.0000
Nitrogen	0.0008	0.0000	0.0006	0.0000	0.0000	0.0000
CO2	0.0423	0.0004	0.0446	0.0010	0.0023	0.0012
H2S	0.0000	0.0000	0.0000	0.0000	0.0000	0.0000
H2O	106.2938	0.9996	45.9575	0.9990	1.9188	0.9988
NBP[1]95*	0.0000	0.0000	0.0000	0.0000	0.0000	0.0000
NBP[1]121*	0.0000	0.0000	0.0000	0.0000	0.0000	0.0000
NBP[1]147*	0.0000	0.0000	0.0000	0.0000	0.0000	0.0000
NBP[1]171*	0.0000	0.0000	0.0000	0.0000	0.0000	0.0000
NBP[1]195*	0.0000	0.0000	0.0000	0.0000	0.0000	0.0000
NBP[1]222*	0.0000	0.0000	0.0000	0.0000	0.0000	0.0000
NBP[1]248*	0.0000	0.0000	0.0000	0.0000	0.0000	0.0000
NBP[1]273*	0.0000	0.0000	0.0000	0.0000	0.0000	0.0000
NBP[1]299*	0.0000	0.0000	0.0000	0.0000	0.0000	0.0000
NBP[1]325*	0.0000	0.0000	0.0000	0.0000	0.0000	0.0000
NBP[1]351*	0.0000	0.0000	0.0000	0.0000	0.0000	0.0000
NBP[1]377*	0.0000	0.0000	0.0000	0.0000	0.0000	0.0000
NBP[1]402*	0.0000	0.0000	0.0000	0.0000	0.0000	0.0000
NBP[1]428*	0.0000	0.0000	0.0000	0.0000	0.0000	0.0000
NBP[1]454*	0.0000	0.0000	0.0000	0.0000	0.0000	0.0000
NBP[1]480*	0.0000	0.0000	0.0000	0.0000	0.0000	0.0000
NBP[1]505*	0.0000	0.0000	0.0000	0.0000	0.0000	0.0000
NBP[1]531*	0.0000	0.0000	0.0000	0.0000	0.0000	0.0000
NBP[1]557*	0.0000	0.0000	0.0000	0.0000	0.0000	0.0000
NBP[1]582*	0.0000	0.0000	0.0000	0.0000	0.0000	0.0000
NBP[1]608*	0.0000	0.0000	0.0000	0.0000	0.0000	0.0000
NBP[1]634*	0.0000	0.0000	0.0000	0.0000	0.0000	0.0000
NBP[1]659*	0.0000	0.0000	0.0000	0.0000	0.0000	0.0000
NBP[1]685*	0.0000	0.0000	0.0000	0.0000	0.0000	0.0000
NBP[1]711*	0.0000	0.0000	0.0000	0.0000	0.0000	0.0000
NBP[1]736*	0.0000	0.0000	0.0000	0.0000	0.0000	0.0000
NBP[1]762*	0.0000	0.0000	0.0000	0.0000	0.0000	0.0000
NBP[1]788*	0.0000	0.0000	0.0000	0.0000	0.0000	0.0000
NBP[1]825*	0.0000	0.0000	0.0000	0.0000	0.0000	0.0000
NBP[1]873*	0.0000	0.0000	0.0000	0.0000	0.0000	0.0000
NBP[1]926*	0.0000	0.0000	0.0000	0.0000	0.0000	0.0000
NBP[1]978*	0.0000	0.0000	0.0000	0.0000	0.0000	0.0000
NBP[1]1021*	0.0000	0.0000	0.0000	0.0000	0.0000	0.0000
NBP[1]1075*	0.0000	0.0000	0.0000	0.0000	0.0000	0.0000
NBP[1]1123*	0.0000	0.0000	0.0000	0.0000	0.0000	0.0000
NBP[1]1173*	0.0000	0.0000	0.0000	0.0000	0.0000	0.0000
NBP[1]1250*	0.0000	0.0000	0.0000	0.0000	0.0000	0.0000
NBP[1]1339*	0.0000	0.0000	0.0000	0.0000	0.0000	0.0000
NBP[1]1432*	0.0000	0.0000	0.0000	0.0000	0.0000	0.0000
NBP[1]1528*	0.0000	0.0000	0.0000	0.0000	0.0000	0.0000
NBP[1]1637*	0.0000	0.0000	0.0000	0.0000	0.0000	0.0000
NBP[1]1732*	0.0000	0.0000	0.0000	0.0000	0.0000	0.0000

* Specified by user.

Material Stream: 3 (continued)

Fluid Package: Basis-1
Property Package: Peng-Robinson

COMPOSITION

Aqueous Phase (continued)

Phase Fraction 1.000

COMPONENTS	MOLAR FLOW (kgmole/h)	MOLE FRACTION	MASS FLOW (tonne/d)	MASS FRACTION	LIQUID VOLUME FLOW (m3/h)	LIQUID VOLUME FRACTION
NBP[1]1819*	0.0000	0.0000	0.0000	0.0000	0.0000	0.0000
NBP[1]1913*	0.0000	0.0000	0.0000	0.0000	0.0000	0.0000
Total	106.3369	1.0000	46.0026	1.0000	1.9210	1.0000

Material Stream: 4

Fluid Package: Basis-1
Property Package: Peng-Robinson

CONDITIONS

		Overall	Vapour Phase	Liquid Phase	Aqueous Phase
Vapour / Phase Fraction		0.6644	0.6644	0.0637	0.2719
Temperature:	(F)	89.98	89.98	89.98	89.98
Pressure:	(psig)	2090	2090	2090	2090
Molar Flow	(MMSCFD)	7.874	5.231	0.5019	2.140
Mass Flow	(tonne/d)	237.5	139.1	52.25	46.16
Std Ideal Liq Vol Flow	(barrel/day)	3142	2371	479.9	291.0
Molar Enthalpy	(kJ/kgmole)	-1.534e+005	-9.314e+004	-2.178e+005	-2.855e+005
Molar Entropy	(kJ/kgmole-C)	120.5	139.7	197.5	55.46
Heat Flow	(MMBtu/hr)	-57.01	-23.00	-5.161	-28.85
Liq Vol Flow @Std Cond	(barrel/day)	2.954e+005 *	9.260e+005	461.5	286.0

PROPERTIES

		Overall	Vapour Phase	Liquid Phase	Aqueous Phase
Molecular Weight		25.24	22.25	87.09	18.04
Molar Density	(kgmole/m3)	10.98	8.487	8.041	55.80
Mass Density	(kg/m3)	277.1	188.8	700.3	1007
Act. Volume Flow	(barrel/day)	5392	4634	469.3	288.4
Mass Enthalpy	(kJ/kg)	-6077	-4186	-2501	-1.583e+004
Mass Entropy	(kJ/kg-C)	4.773	6.278	2.268	3.074
Heat Capacity	(kJ/kgmole-C)	83.30	76.12	183.3	77.41
Mass Heat Capacity	(kJ/kg-C)	3.300	3.421	2.104	4.291
LHV Molar Basis (Std)	(Btu/SCF)	---	---	---	6.334e-004
LHV Mass Basis (Std)	(kJ/kg)	---	---	---	3.099e-002
Phase Fraction [Vol. Basis]		0.7547	0.7547	0.1527	9.262e-002
Phase Fraction [Mass Basis]		0.5858	0.5858	0.2199	0.1943
Partial Pressure of CO2	(psig)	54.43	---	---	---
Cost Based on Flow	(Cost/s)	0.0000	0.0000	0.0000	0.0000
Act. Gas Flow	(ACT_m3/h)	30.70	30.70	---	---
Avg. Liq. Density	(kgmole/m3)	18.84	16.59	7.864	55.30
Specific Heat	(kJ/kgmole-C)	83.30	76.12	183.3	77.41
Std. Gas Flow	(STD_m3/h)	9272	6161	591.0	2521
Std. Ideal Liq. Mass Density	(kg/m3)	475.5	369.1	684.8	997.5
Act. Liq. Flow	(barrel/day)	757.7	---	469.3	288.4
Z Factor		---	0.6735	0.7108	0.1024
Watson K		15.58	16.99	12.28	8.469
User Property		---	---	---	---
Partial Pressure of H2S	(psig)	-14.69	---	---	---
Cp/(Cp - R)		1.111	1.123	1.048	1.120
Cp/Cv		1.471	2.007	1.291	1.149
Heat of Vap.	(kJ/kgmole)	6.038e+004	---	---	---
Kinematic Viscosity	(cSt)	---	0.1117	1.948	0.7558
Liq. Mass Density (Std. Cond)	(kg/m3)	5.058	0.9452	712.1	1015
Liq. Vol. Flow (Std. Cond)	(barrel/day)	2.954e+005	9.260e+005	461.5	286.0
Liquid Fraction		0.3356	0.0000	1.000	1.000
Molar Volume	(m3/kgmole)	9.108e-002	0.1178	0.1244	1.792e-002

* Specified by user.

Material Stream: 4 (continued)

Fluid Package: Basis-1
Property Package: Peng-Robinson

PROPERTIES

		Overall	Vapour Phase	Liquid Phase	Aqueous Phase
Mass Heat of Vap.	(kJ/kg)	2392	---	---	---
Phase Fraction [Molar Basis]		0.6644	0.6644	0.0637	0.2719
Surface Tension	(dyne/cm)	---	---	9.238	70.78
Thermal Conductivity	(W/m-K)	---	5.650e-002	8.530e-002	0.6213
Viscosity	(cP)	---	2.109e-002	1.364	0.7608
Cv (Semi-Ideal)	(kJ/kgmole-C)	74.98	67.80	175.0	69.10
Mass Cv (Semi-Ideal)	(kJ/kg-C)	2.971	3.047	2.009	3.831
Cv	(kJ/kgmole-C)	56.65	37.93	142.0	67.38
Mass Cv	(kJ/kg-C)	2.244	1.705	1.630	3.735
Cv (Ent. Method)	(kJ/kgmole-C)	---	36.85	---	66.76
Mass Cv (Ent. Method)	(kJ/kg-C)	---	1.656	---	3.701
Cp/Cv (Ent. Method)		---	2.065	---	1.160
Reid VP at 37.8 C	(psig)	3319	2452	399.0	---
True VP at 37.8 C	(psig)	6318	2453	2168	182.1
Liq. Vol. Flow - Sum(Std. Cond)	(barrel/day)	9.267e+005	9.260e+005	461.5	286.0
HHV Molar Basis (Std)	(Btu/SCF)	---	---	---	46.42
HHV Mass Basis (Std)	(kJ/kg)	---	---	---	2271
CO2 Loading		---	---	---	---
CO2 App ML Con	(kgmole/m3)	---	---	0.2444	5.118e-002
CO2 App WT Con	(kgmol/kg)	---	---	3.490e-004	5.084e-005
Phase Fraction [Act. Vol. Basis]		0.8595	0.8595	8.703e-002	5.349e-002
Mass Exergy	(kJ/kg)	317.7	---	---	---
Viscosity Index		-33.28	---	---	---
Ideal Gas Cp/Cv		1.215	1.238	1.062	1.329
Ideal Gas Cp	(kJ/kgmole-C)	46.91	43.24	141.8	33.62
Mass Ideal Gas Cp	(kJ/kg-C)	1.859	1.943	1.628	1.864
Bubble Point Pressure	(psig)	6228	---	---	---

COMPOSITION

Overall Phase

Vapour Fraction 0.6644

COMPONENTS	MOLAR FLOW (kgmole/h)	MOLE FRACTION	MASS FLOW (tonne/d)	MASS FRACTION	LIQUID VOLUME FLOW (m3/h)	LIQUID VOLUME FRACTION
Methane	207.0440	0.5280	79.7181	0.3356	11.0944	0.5330
Ethane	28.8006	0.0734	20.7848	0.0875	2.4348	0.1170
Propane	15.2677	0.0389	16.1583	0.0680	1.3288	0.0638
i-Butane	2.0287	0.0052	2.8300	0.0119	0.2098	0.0101
n-Butane	3.9513	0.0101	5.5120	0.0232	0.3938	0.0189
i-Pentane	0.8495	0.0022	1.4710	0.0062	0.0983	0.0047
n-Pentane	0.9602	0.0024	1.6627	0.0070	0.1100	0.0053
n-Hexane	1.4698	0.0037	3.0399	0.0128	0.1911	0.0092
Nitrogen	5.5989	0.0143	3.7642	0.0158	0.1945	0.0093
CO2	9.4151	0.0240	9.9445	0.0419	0.5020	0.0241
H2S	0.0006	0.0000	0.0005	0.0000	0.0000	0.0000
H2O	106.6990	0.2721	46.1326	0.1942	1.9261	0.0925
NBP[1]95*	0.2883	0.0007	0.4699	0.0020	0.0288	0.0014
NBP[1]121*	0.3381	0.0009	0.5912	0.0025	0.0358	0.0017
NBP[1]147*	0.4314	0.0011	0.8304	0.0035	0.0494	0.0024
NBP[1]171*	0.8224	0.0021	1.7306	0.0073	0.1013	0.0049
NBP[1]195*	1.0758	0.0027	2.4160	0.0102	0.1398	0.0067
NBP[1]222*	0.8003	0.0020	1.9331	0.0081	0.1105	0.0053
NBP[1]248*	0.6657	0.0017	1.7287	0.0073	0.0976	0.0047
NBP[1]273*	0.5358	0.0014	1.4881	0.0063	0.0831	0.0040
NBP[1]299*	0.4185	0.0011	1.2393	0.0052	0.0684	0.0033
NBP[1]325*	0.3029	0.0008	0.9528	0.0040	0.0521	0.0025
NBP[1]351*	0.2456	0.0006	0.8214	0.0035	0.0445	0.0021
NBP[1]377*	0.2247	0.0006	0.8014	0.0034	0.0429	0.0021

* Specified by user.

Material Stream: 4 (continued)

Fluid Package: Basis-1
Property Package: Peng-Robinson

COMPOSITION

Overall Phase (continued)

Vapour Fraction 0.6644

COMPONENTS	MOLAR FLOW (kgmole/h)	MOLE FRACTION	MASS FLOW (tonne/d)	MASS FRACTION	LIQUID VOLUME FLOW (m3/h)	LIQUID VOLUME FRACTION
NBP[1]402*	0.2061	0.0005	0.7838	0.0033	0.0416	0.0020
NBP[1]428*	0.1961	0.0005	0.7956	0.0033	0.0418	0.0020
NBP[1]454*	0.1956	0.0005	0.8480	0.0036	0.0441	0.0021
NBP[1]480*	0.1982	0.0005	0.9182	0.0039	0.0473	0.0023
NBP[1]505*	0.1920	0.0005	0.9484	0.0040	0.0484	0.0023
NBP[1]531*	0.1852	0.0005	0.9740	0.0041	0.0492	0.0024
NBP[1]557*	0.1784	0.0005	0.9978	0.0042	0.0500	0.0024
NBP[1]582*	0.1706	0.0004	1.0132	0.0043	0.0503	0.0024
NBP[1]608*	0.1643	0.0004	1.0351	0.0044	0.0510	0.0025
NBP[1]634*	0.1611	0.0004	1.0753	0.0045	0.0526	0.0025
NBP[1]659*	0.1586	0.0004	1.1194	0.0047	0.0543	0.0026
NBP[1]685*	0.1641	0.0004	1.2227	0.0051	0.0588	0.0028
NBP[1]711*	0.1715	0.0004	1.3445	0.0057	0.0642	0.0031
NBP[1]736*	0.1697	0.0004	1.3915	0.0059	0.0659	0.0032
NBP[1]762*	0.1653	0.0004	1.4214	0.0060	0.0669	0.0032
NBP[1]788*	0.1585	0.0004	1.4424	0.0061	0.0674	0.0032
NBP[1]825*	0.2655	0.0007	2.5963	0.0109	0.1201	0.0058
NBP[1]873*	0.1830	0.0005	1.9404	0.0082	0.0887	0.0043
NBP[1]926*	0.1437	0.0004	1.6472	0.0069	0.0744	0.0036
NBP[1]978*	0.1474	0.0004	1.8524	0.0078	0.0825	0.0040
NBP[1]1021*	0.0728	0.0002	0.9655	0.0041	0.0426	0.0020
NBP[1]1075*	0.0449	0.0001	0.6310	0.0027	0.0276	0.0013
NBP[1]1123*	0.0417	0.0001	0.6267	0.0026	0.0271	0.0013
NBP[1]1173*	0.0300	0.0001	0.4772	0.0020	0.0205	0.0010
NBP[1]1250*	0.0393	0.0001	0.6767	0.0028	0.0287	0.0014
NBP[1]1339*	0.0364	0.0001	0.6999	0.0029	0.0291	0.0014
NBP[1]1432*	0.0257	0.0001	0.5397	0.0023	0.0221	0.0011
NBP[1]1528*	0.0180	0.0000	0.4082	0.0017	0.0165	0.0008
NBP[1]1637*	0.0127	0.0000	0.3047	0.0013	0.0122	0.0006
NBP[1]1732*	0.0101	0.0000	0.2565	0.0011	0.0101	0.0005
NBP[1]1819*	0.0097	0.0000	0.2590	0.0011	0.0101	0.0005
NBP[1]1913*	0.0112	0.0000	0.3148	0.0013	0.0121	0.0006
Total	392.1623	1.0000	237.5489	1.0000	20.8162	1.0000

Vapour Phase

Phase Fraction 0.6644

COMPONENTS	MOLAR FLOW (kgmole/h)	MOLE FRACTION	MASS FLOW (tonne/d)	MASS FRACTION	LIQUID VOLUME FLOW (m3/h)	LIQUID VOLUME FRACTION
Methane	197.5775	0.7583	76.0732	0.5467	10.5871	0.6739
Ethane	26.2225	0.1006	18.9242	0.1360	2.2169	0.1411
Propane	13.0983	0.0503	13.8623	0.0996	1.1400	0.0726
i-Butane	1.6359	0.0063	2.2820	0.0164	0.1692	0.0108
n-Butane	3.0834	0.0118	4.3013	0.0309	0.3073	0.0196
i-Pentane	0.6045	0.0023	1.0467	0.0075	0.0700	0.0045
n-Pentane	0.6554	0.0025	1.1349	0.0082	0.0751	0.0048
n-Hexane	0.8360	0.0032	1.7292	0.0124	0.1087	0.0069
Nitrogen	5.4316	0.0208	3.6517	0.0262	0.1887	0.0120
CO2	8.5576	0.0328	9.0388	0.0650	0.4563	0.0290
H2S	0.0005	0.0000	0.0004	0.0000	0.0000	0.0000
H2O	0.1735	0.0007	0.0750	0.0005	0.0031	0.0002
NBP[1]95*	0.1967	0.0008	0.3207	0.0023	0.0197	0.0013
NBP[1]121*	0.2150	0.0008	0.3759	0.0027	0.0227	0.0014
NBP[1]147*	0.2517	0.0010	0.4844	0.0035	0.0288	0.0018
NBP[1]171*	0.4368	0.0017	0.9192	0.0066	0.0538	0.0034
NBP[1]195*	0.5145	0.0020	1.1554	0.0083	0.0668	0.0043

* Specified by user.

Material Stream: 4 (continued)

Fluid Package: Basis-1
Property Package: Peng-Robinson

COMPOSITION

Vapour Phase (continued)

Phase Fraction 0.6644

COMPONENTS	MOLAR FLOW (kgmole/h)	MOLE FRACTION	MASS FLOW (tonne/d)	MASS FRACTION	LIQUID VOLUME FLOW (m3/h)	LIQUID VOLUME FRACTION
NBP[1]222*	0.3330	0.0013	0.8042	0.0058	0.0460	0.0029
NBP[1]248*	0.2380	0.0009	0.6181	0.0044	0.0349	0.0022
NBP[1]273*	0.1618	0.0006	0.4493	0.0032	0.0251	0.0016
NBP[1]299*	0.1047	0.0004	0.3099	0.0022	0.0171	0.0011
NBP[1]325*	0.0612	0.0002	0.1925	0.0014	0.0105	0.0007
NBP[1]351*	0.0393	0.0002	0.1314	0.0009	0.0071	0.0005
NBP[1]377*	0.0276	0.0001	0.0984	0.0007	0.0053	0.0003
NBP[1]402*	0.0192	0.0001	0.0730	0.0005	0.0039	0.0002
NBP[1]428*	0.0136	0.0001	0.0550	0.0004	0.0029	0.0002
NBP[1]454*	0.0099	0.0000	0.0428	0.0003	0.0022	0.0001
NBP[1]480*	0.0072	0.0000	0.0333	0.0002	0.0017	0.0001
NBP[1]505*	0.0049	0.0000	0.0243	0.0002	0.0012	0.0001
NBP[1]531*	0.0033	0.0000	0.0174	0.0001	0.0009	0.0001
NBP[1]557*	0.0022	0.0000	0.0122	0.0001	0.0006	0.0000
NBP[1]582*	0.0014	0.0000	0.0084	0.0001	0.0004	0.0000
NBP[1]608*	0.0009	0.0000	0.0057	0.0000	0.0003	0.0000
NBP[1]634*	0.0006	0.0000	0.0039	0.0000	0.0002	0.0000
NBP[1]659*	0.0004	0.0000	0.0026	0.0000	0.0001	0.0000
NBP[1]685*	0.0002	0.0000	0.0018	0.0000	0.0001	0.0000
NBP[1]711*	0.0002	0.0000	0.0013	0.0000	0.0001	0.0000
NBP[1]736*	0.0001	0.0000	0.0008	0.0000	0.0000	0.0000
NBP[1]762*	0.0001	0.0000	0.0005	0.0000	0.0000	0.0000
NBP[1]788*	0.0000	0.0000	0.0003	0.0000	0.0000	0.0000
NBP[1]825*	0.0000	0.0000	0.0003	0.0000	0.0000	0.0000
NBP[1]873*	0.0000	0.0000	0.0001	0.0000	0.0000	0.0000
NBP[1]926*	0.0000	0.0000	0.0000	0.0000	0.0000	0.0000
NBP[1]978*	0.0000	0.0000	0.0000	0.0000	0.0000	0.0000
NBP[1]1021*	0.0000	0.0000	0.0000	0.0000	0.0000	0.0000
NBP[1]1075*	0.0000	0.0000	0.0000	0.0000	0.0000	0.0000
NBP[1]1123*	0.0000	0.0000	0.0000	0.0000	0.0000	0.0000
NBP[1]1173*	0.0000	0.0000	0.0000	0.0000	0.0000	0.0000
NBP[1]1250*	0.0000	0.0000	0.0000	0.0000	0.0000	0.0000
NBP[1]1339*	0.0000	0.0000	0.0000	0.0000	0.0000	0.0000
NBP[1]1432*	0.0000	0.0000	0.0000	0.0000	0.0000	0.0000
NBP[1]1528*	0.0000	0.0000	0.0000	0.0000	0.0000	0.0000
NBP[1]1637*	0.0022	0.0000	0.0525	0.0004	0.0021	0.0001
NBP[1]1732*	0.0101	0.0000	0.2565	0.0018	0.0101	0.0006
NBP[1]1819*	0.0097	0.0000	0.2590	0.0019	0.0101	0.0006
NBP[1]1913*	0.0112	0.0000	0.3148	0.0023	0.0121	0.0008
Total	260.5541	1.0000	139.1456	1.0000	15.7094	1.0000

Liquid Phase

Phase Fraction 6.374e-002

COMPONENTS	MOLAR FLOW (kgmole/h)	MOLE FRACTION	MASS FLOW (tonne/d)	MASS FRACTION	LIQUID VOLUME FLOW (m3/h)	LIQUID VOLUME FRACTION
Methane	9.4664	0.3787	3.6448	0.0698	0.5073	0.1596
Ethane	2.5781	0.1031	1.8606	0.0356	0.2180	0.0686
Propane	2.1695	0.0868	2.2960	0.0439	0.1888	0.0594
i-Butane	0.3928	0.0157	0.5480	0.0105	0.0406	0.0128
n-Butane	0.8679	0.0347	1.2107	0.0232	0.0865	0.0272
i-Pentane	0.2450	0.0098	0.4243	0.0081	0.0284	0.0089
n-Pentane	0.3048	0.0122	0.5279	0.0101	0.0349	0.0110
n-Hexane	0.6338	0.0254	1.3108	0.0251	0.0824	0.0259
Nitrogen	0.1633	0.0065	0.1098	0.0021	0.0057	0.0018
CO2	0.7597	0.0304	0.8024	0.0154	0.0405	0.0127

* Specified by user.

Material Stream: 4 (continued)

Fluid Package: Basis-1
Property Package: Peng-Robinson

COMPOSITION

Liquid Phase (continued)

Phase Fraction 6.374e-002

COMPONENTS	MOLAR FLOW (kgmole/h)	MOLE FRACTION	MASS FLOW (tonne/d)	MASS FRACTION	LIQUID VOLUME FLOW (m3/h)	LIQUID VOLUME FRACTION
H2S	0.0001	0.0000	0.0001	0.0000	0.0000	0.0000
H2O	0.0162	0.0006	0.0070	0.0001	0.0003	0.0001
NBP[1]95*	0.0915	0.0037	0.1492	0.0029	0.0091	0.0029
NBP[1]121*	0.1231	0.0049	0.2153	0.0041	0.0130	0.0041
NBP[1]147*	0.1798	0.0072	0.3460	0.0066	0.0206	0.0065
NBP[1]171*	0.3856	0.0154	0.8114	0.0155	0.0475	0.0149
NBP[1]195*	0.5613	0.0225	1.2606	0.0241	0.0729	0.0229
NBP[1]222*	0.4674	0.0187	1.1289	0.0216	0.0645	0.0203
NBP[1]248*	0.4276	0.0171	1.1106	0.0213	0.0627	0.0197
NBP[1]273*	0.3741	0.0150	1.0389	0.0199	0.0580	0.0182
NBP[1]299*	0.3138	0.0126	0.9293	0.0178	0.0513	0.0161
NBP[1]325*	0.2417	0.0097	0.7602	0.0146	0.0416	0.0131
NBP[1]351*	0.2063	0.0083	0.6900	0.0132	0.0374	0.0118
NBP[1]377*	0.1971	0.0079	0.7030	0.0135	0.0377	0.0118
NBP[1]402*	0.1869	0.0075	0.7108	0.0136	0.0377	0.0119
NBP[1]428*	0.1825	0.0073	0.7405	0.0142	0.0389	0.0122
NBP[1]454*	0.1857	0.0074	0.8052	0.0154	0.0419	0.0132
NBP[1]480*	0.1910	0.0076	0.8849	0.0169	0.0456	0.0143
NBP[1]505*	0.1871	0.0075	0.9240	0.0177	0.0471	0.0148
NBP[1]531*	0.1819	0.0073	0.9566	0.0183	0.0484	0.0152
NBP[1]557*	0.1762	0.0071	0.9856	0.0189	0.0494	0.0155
NBP[1]582*	0.1692	0.0068	1.0048	0.0192	0.0499	0.0157
NBP[1]608*	0.1634	0.0065	1.0294	0.0197	0.0507	0.0160
NBP[1]634*	0.1605	0.0064	1.0714	0.0205	0.0524	0.0165
NBP[1]659*	0.1582	0.0063	1.1168	0.0214	0.0542	0.0170
NBP[1]685*	0.1639	0.0066	1.2209	0.0234	0.0587	0.0185
NBP[1]711*	0.1714	0.0069	1.3432	0.0257	0.0641	0.0202
NBP[1]736*	0.1696	0.0068	1.3907	0.0266	0.0659	0.0207
NBP[1]762*	0.1652	0.0066	1.4209	0.0272	0.0668	0.0210
NBP[1]788*	0.1584	0.0063	1.4420	0.0276	0.0674	0.0212
NBP[1]825*	0.2654	0.0106	2.5960	0.0497	0.1201	0.0378
NBP[1]873*	0.1830	0.0073	1.9403	0.0371	0.0887	0.0279
NBP[1]926*	0.1437	0.0058	1.6471	0.0315	0.0744	0.0234
NBP[1]978*	0.1474	0.0059	1.8524	0.0355	0.0825	0.0260
NBP[1]1021*	0.0728	0.0029	0.9655	0.0185	0.0426	0.0134
NBP[1]1075*	0.0449	0.0018	0.6310	0.0121	0.0276	0.0087
NBP[1]1123*	0.0417	0.0017	0.6267	0.0120	0.0271	0.0085
NBP[1]1173*	0.0300	0.0012	0.4772	0.0091	0.0205	0.0064
NBP[1]1250*	0.0393	0.0016	0.6767	0.0130	0.0287	0.0090
NBP[1]1339*	0.0364	0.0015	0.6999	0.0134	0.0291	0.0092
NBP[1]1432*	0.0257	0.0010	0.5397	0.0103	0.0221	0.0070
NBP[1]1528*	0.0180	0.0007	0.4082	0.0078	0.0165	0.0052
NBP[1]1637*	0.0105	0.0004	0.2521	0.0048	0.0101	0.0032
NBP[1]1732*	0.0000	0.0000	0.0000	0.0000	0.0000	0.0000
NBP[1]1819*	0.0000	0.0000	0.0000	0.0000	0.0000	0.0000
NBP[1]1913*	0.0000	0.0000	0.0000	0.0000	0.0000	0.0000
Total	24.9971	1.0000	52.2467	1.0000	3.1788	1.0000

Aqueous Phase

Phase Fraction 0.2719

COMPONENTS	MOLAR FLOW (kgmole/h)	MOLE FRACTION	MASS FLOW (tonne/d)	MASS FRACTION	LIQUID VOLUME FLOW (m3/h)	LIQUID VOLUME FRACTION
Methane	0.0001	0.0000	0.0000	0.0000	0.0000	0.0000
Ethane	0.0000	0.0000	0.0000	0.0000	0.0000	0.0000
Propane	0.0000	0.0000	0.0000	0.0000	0.0000	0.0000

* Specified by user.

Material Stream: 4 (continued)

Fluid Package: Basis-1
Property Package: Peng-Robinson

COMPOSITION

Aqueous Phase (continued)

Phase Fraction 0.2719

COMPONENTS	MOLAR FLOW (kgmole/h)	MOLE FRACTION	MASS FLOW (tonne/d)	MASS FRACTION	LIQUID VOLUME FLOW (m3/h)	LIQUID VOLUME FRACTION
i-Butane	0.0000	0.0000	0.0000	0.0000	0.0000	0.0000
n-Butane	0.0000	0.0000	0.0000	0.0000	0.0000	0.0000
i-Pentane	0.0000	0.0000	0.0000	0.0000	0.0000	0.0000
n-Pentane	0.0000	0.0000	0.0000	0.0000	0.0000	0.0000
n-Hexane	0.0000	0.0000	0.0000	0.0000	0.0000	0.0000
Nitrogen	0.0040	0.0000	0.0027	0.0001	0.0001	0.0001
CO2	0.0978	0.0009	0.1033	0.0022	0.0052	0.0027
H2S	0.0000	0.0000	0.0000	0.0000	0.0000	0.0000
H2O	106.5092	0.9990	46.0506	0.9977	1.9226	0.9972
NBP[1]95*	0.0000	0.0000	0.0000	0.0000	0.0000	0.0000
NBP[1]121*	0.0000	0.0000	0.0000	0.0000	0.0000	0.0000
NBP[1]147*	0.0000	0.0000	0.0000	0.0000	0.0000	0.0000
NBP[1]171*	0.0000	0.0000	0.0000	0.0000	0.0000	0.0000
NBP[1]195*	0.0000	0.0000	0.0000	0.0000	0.0000	0.0000
NBP[1]222*	0.0000	0.0000	0.0000	0.0000	0.0000	0.0000
NBP[1]248*	0.0000	0.0000	0.0000	0.0000	0.0000	0.0000
NBP[1]273*	0.0000	0.0000	0.0000	0.0000	0.0000	0.0000
NBP[1]299*	0.0000	0.0000	0.0000	0.0000	0.0000	0.0000
NBP[1]325*	0.0000	0.0000	0.0000	0.0000	0.0000	0.0000
NBP[1]351*	0.0000	0.0000	0.0000	0.0000	0.0000	0.0000
NBP[1]377*	0.0000	0.0000	0.0000	0.0000	0.0000	0.0000
NBP[1]402*	0.0000	0.0000	0.0000	0.0000	0.0000	0.0000
NBP[1]428*	0.0000	0.0000	0.0000	0.0000	0.0000	0.0000
NBP[1]454*	0.0000	0.0000	0.0000	0.0000	0.0000	0.0000
NBP[1]480*	0.0000	0.0000	0.0000	0.0000	0.0000	0.0000
NBP[1]505*	0.0000	0.0000	0.0000	0.0000	0.0000	0.0000
NBP[1]531*	0.0000	0.0000	0.0000	0.0000	0.0000	0.0000
NBP[1]557*	0.0000	0.0000	0.0000	0.0000	0.0000	0.0000
NBP[1]582*	0.0000	0.0000	0.0000	0.0000	0.0000	0.0000
NBP[1]608*	0.0000	0.0000	0.0000	0.0000	0.0000	0.0000
NBP[1]634*	0.0000	0.0000	0.0000	0.0000	0.0000	0.0000
NBP[1]659*	0.0000	0.0000	0.0000	0.0000	0.0000	0.0000
NBP[1]685*	0.0000	0.0000	0.0000	0.0000	0.0000	0.0000
NBP[1]711*	0.0000	0.0000	0.0000	0.0000	0.0000	0.0000
NBP[1]736*	0.0000	0.0000	0.0000	0.0000	0.0000	0.0000
NBP[1]762*	0.0000	0.0000	0.0000	0.0000	0.0000	0.0000
NBP[1]788*	0.0000	0.0000	0.0000	0.0000	0.0000	0.0000
NBP[1]825*	0.0000	0.0000	0.0000	0.0000	0.0000	0.0000
NBP[1]873*	0.0000	0.0000	0.0000	0.0000	0.0000	0.0000
NBP[1]926*	0.0000	0.0000	0.0000	0.0000	0.0000	0.0000
NBP[1]978*	0.0000	0.0000	0.0000	0.0000	0.0000	0.0000
NBP[1]1021*	0.0000	0.0000	0.0000	0.0000	0.0000	0.0000
NBP[1]1075*	0.0000	0.0000	0.0000	0.0000	0.0000	0.0000
NBP[1]1123*	0.0000	0.0000	0.0000	0.0000	0.0000	0.0000
NBP[1]1173*	0.0000	0.0000	0.0000	0.0000	0.0000	0.0000
NBP[1]1250*	0.0000	0.0000	0.0000	0.0000	0.0000	0.0000
NBP[1]1339*	0.0000	0.0000	0.0000	0.0000	0.0000	0.0000
NBP[1]1432*	0.0000	0.0000	0.0000	0.0000	0.0000	0.0000
NBP[1]1528*	0.0000	0.0000	0.0000	0.0000	0.0000	0.0000
NBP[1]1637*	0.0000	0.0000	0.0000	0.0000	0.0000	0.0000
NBP[1]1732*	0.0000	0.0000	0.0000	0.0000	0.0000	0.0000
NBP[1]1819*	0.0000	0.0000	0.0000	0.0000	0.0000	0.0000
NBP[1]1913*	0.0000	0.0000	0.0000	0.0000	0.0000	0.0000
Total	106.6110	1.0000	46.1566	1.0000	1.9280	1.0000

* Specified by user.

Material Stream: 5

Fluid Package: Basis-1
Property Package: Peng-Robinson

CONDITIONS

	Overall	Vapour Phase	Liquid Phase	Aqueous Phase
Vapour / Phase Fraction	0.6693	0.6693	0.0591	0.2716
Temperature: (F)	105.0 *	105.0	105.0	105.0
Pressure: (psig)	2090	2090	2090	2090
Molar Flow (MMSCFD)	7.874	5.270	0.4654	2.138
Mass Flow (tonne/d)	237.5	140.6	50.84	46.11
Std Ideal Liq Vol Flow (barrel/day)	3142	2391	460.2	290.7
Molar Enthalpy (kJ/kgmole)	-1.527e+005	-9.272e+004	-2.243e+005	-2.849e+005
Molar Entropy (kJ/kgmole-C)	122.8	141.7	208.3	57.54
Heat Flow (MMBtu/hr)	-56.75	-23.07	-4.928	-28.76
Liq Vol Flow @Std Cond (barrel/day)	2.954e+005 *	9.328e+005	441.5	285.7

PROPERTIES

	Overall	Vapour Phase	Liquid Phase	Aqueous Phase
Molecular Weight	25.24	22.32	91.38	18.04
Molar Density (kgmole/m3)	10.34	7.952	7.690	55.46
Mass Density (kg/m3)	260.9	177.5	702.7	1000
Act. Volume Flow (barrel/day)	5728	4983	455.0	289.9
Mass Enthalpy (kJ/kg)	-6049	-4154	-2455	-1.579e+004
Mass Entropy (kJ/kg-C)	4.864	6.347	2.279	3.190
Heat Capacity (kJ/kgmole-C)	81.84	73.70	194.3	77.43
Mass Heat Capacity (kJ/kg-C)	3.243	3.302	2.127	4.293
LHV Molar Basis (Std) (Btu/SCF)	---	---	---	9.889e-004
LHV Mass Basis (Std) (kJ/kg)	---	---	---	4.839e-002
Phase Fraction [Vol. Basis]	0.7610	0.7610	0.1464	9.251e-002
Phase Fraction [Mass Basis]	0.5919	0.5919	0.2140	0.1941
Partial Pressure of CO2 (psig)	54.66	---	---	---
Cost Based on Flow (Cost/s)	0.0000	0.0000	0.0000	0.0000
Act. Gas Flow (ACT_m3/h)	33.01	33.01	---	---
Avg. Liq. Density (kgmole/m3)	18.84	16.57	7.605	55.31
Specific Heat (kJ/kgmole-C)	81.84	73.70	194.3	77.43
Std. Gas Flow (STD_m3/h)	9272	6206	548.1	2518
Std. Ideal Liq. Mass Density (kg/m3)	475.5	369.8	694.9	997.6
Act. Liq. Flow (barrel/day)	744.9	---	455.0	289.9
Z Factor	---	0.6997	0.7235	0.1003
Watson K	15.58	16.97	12.21	8.472
User Property	---	---	---	---
Partial Pressure of H2S (psig)	-14.69	---	---	---
Cp/(Cp - R)	1.113	1.127	1.045	1.120
Cp/Cv	1.435	1.919	1.280	1.152
Heat of Vap. (kJ/kgmole)	6.038e+004	---	---	---
Kinematic Viscosity (cSt)	---	0.1151	2.090	0.6444
Liq. Mass Density (Std. Cond) (kg/m3)	5.058	0.9481	724.3	1015
Liq. Vol. Flow (Std. Cond) (barrel/day)	2.954e+005	9.328e+005	441.5	285.7
Liquid Fraction	0.3307	0.0000	1.000	1.000
Molar Volume (m3/kgmole)	9.675e-002	0.1258	0.1300	1.803e-002
Mass Heat of Vap. (kJ/kg)	2392	---	---	---
Phase Fraction [Molar Basis]	0.6693	0.6693	0.0591	0.2716
Surface Tension (dyne/cm)	---	---	9.330	69.34
Thermal Conductivity (W/m-K)	---	5.521e-002	8.535e-002	0.6322
Viscosity (cP)	---	2.043e-002	1.469	0.6446
Cv (Semi-Ideal) (kJ/kgmole-C)	73.53	65.38	186.0	69.12
Mass Cv (Semi-Ideal) (kJ/kg-C)	2.913	2.929	2.036	3.832
Cv (kJ/kgmole-C)	57.05	38.40	151.9	67.19
Mass Cv (kJ/kg-C)	2.260	1.720	1.662	3.725
Cv (Ent. Method) (kJ/kgmole-C)	---	37.84	---	66.40
Mass Cv (Ent. Method) (kJ/kg-C)	---	1.695	---	3.681
Cp/Cv (Ent. Method)	---	1.947	---	1.166

* Specified by user.

Material Stream: 5 (continued)

Fluid Package: Basis-1
Property Package: Peng-Robinson

PROPERTIES

	Overall	Vapour Phase	Liquid Phase	Aqueous Phase
Reid VP at 37.8 C (psig)	3319	2401	369.1	---
True VP at 37.8 C (psig)	6318	2875	2053	380.5
Liq. Vol. Flow - Sum(Std. Cond) (barrel/day)	9.335e+005	9.328e+005	441.5	285.7
HHV Molar Basis (Std) (Btu/SCF)	---	---	---	46.43
HHV Mass Basis (Std) (kJ/kg)	---	---	---	2272
CO2 Loading	---	---	---	---
CO2 App ML Con (kgmole/m3)	---	---	0.2248	4.588e-002
CO2 App WT Con (kgmol/kg)	---	---	3.200e-004	4.587e-005
Phase Fraction [Act. Vol. Basis]	0.8699	0.8699	7.945e-002	5.061e-002
Mass Exergy (kJ/kg)	318.7	---	---	---
Viscosity Index	-38.22	---	---	---
Ideal Gas Cp/Cv	1.212	1.234	1.058	1.328
Ideal Gas Cp (kJ/kgmole-C)	47.49	43.89	151.7	33.67
Mass Ideal Gas Cp (kJ/kg-C)	1.882	1.966	1.661	1.867
Bubble Point Pressure (psig)	6321	---	---	---

COMPOSITION

Overall Phase

Vapour Fraction 0.6693

COMPONENTS	MOLAR FLOW (kgmole/h)	MOLE FRACTION	MASS FLOW (tonne/d)	MASS FRACTION	LIQUID VOLUME FLOW (m3/h)	LIQUID VOLUME FRACTION
Methane	207.0440	0.5280	79.7181	0.3356	11.0944	0.5330
Ethane	28.8006	0.0734	20.7848	0.0875	2.4348	0.1170
Propane	15.2677	0.0389	16.1583	0.0680	1.3288	0.0638
i-Butane	2.0287	0.0052	2.8300	0.0119	0.2098	0.0101
n-Butane	3.9513	0.0101	5.5120	0.0232	0.3938	0.0189
i-Pentane	0.8495	0.0022	1.4710	0.0062	0.0983	0.0047
n-Pentane	0.9602	0.0024	1.6627	0.0070	0.1100	0.0053
n-Hexane	1.4698	0.0037	3.0399	0.0128	0.1911	0.0092
Nitrogen	5.5989	0.0143	3.7642	0.0158	0.1945	0.0093
CO2	9.4151	0.0240	9.9445	0.0419	0.5020	0.0241
H2S	0.0006	0.0000	0.0005	0.0000	0.0000	0.0000
H2O	106.6990	0.2721	46.1326	0.1942	1.9261	0.0925
NBP[1]95*	0.2883	0.0007	0.4699	0.0020	0.0288	0.0014
NBP[1]121*	0.3381	0.0009	0.5912	0.0025	0.0358	0.0017
NBP[1]147*	0.4314	0.0011	0.8304	0.0035	0.0494	0.0024
NBP[1]171*	0.8224	0.0021	1.7306	0.0073	0.1013	0.0049
NBP[1]195*	1.0758	0.0027	2.4160	0.0102	0.1398	0.0067
NBP[1]222*	0.8003	0.0020	1.9331	0.0081	0.1105	0.0053
NBP[1]248*	0.6657	0.0017	1.7287	0.0073	0.0976	0.0047
NBP[1]273*	0.5358	0.0014	1.4881	0.0063	0.0831	0.0040
NBP[1]299*	0.4185	0.0011	1.2393	0.0052	0.0684	0.0033
NBP[1]325*	0.3029	0.0008	0.9528	0.0040	0.0521	0.0025
NBP[1]351*	0.2456	0.0006	0.8214	0.0035	0.0445	0.0021
NBP[1]377*	0.2247	0.0006	0.8014	0.0034	0.0429	0.0021
NBP[1]402*	0.2061	0.0005	0.7838	0.0033	0.0416	0.0020
NBP[1]428*	0.1961	0.0005	0.7956	0.0033	0.0418	0.0020
NBP[1]454*	0.1956	0.0005	0.8480	0.0036	0.0441	0.0021
NBP[1]480*	0.1982	0.0005	0.9182	0.0039	0.0473	0.0023
NBP[1]505*	0.1920	0.0005	0.9484	0.0040	0.0484	0.0023
NBP[1]531*	0.1852	0.0005	0.9740	0.0041	0.0492	0.0024
NBP[1]557*	0.1784	0.0005	0.9978	0.0042	0.0500	0.0024
NBP[1]582*	0.1706	0.0004	1.0132	0.0043	0.0503	0.0024
NBP[1]608*	0.1643	0.0004	1.0351	0.0044	0.0510	0.0025
NBP[1]634*	0.1611	0.0004	1.0753	0.0045	0.0526	0.0025
NBP[1]659*	0.1586	0.0004	1.1194	0.0047	0.0543	0.0026
NBP[1]685*	0.1641	0.0004	1.2227	0.0051	0.0588	0.0028

* Specified by user.

Material Stream: 5 (continued)

Fluid Package: Basis-1
Property Package: Peng-Robinson

COMPOSITION

Overall Phase (continued)

Vapour Fraction 0.6693

COMPONENTS	MOLAR FLOW (kgmole/h)	MOLE FRACTION	MASS FLOW (tonne/d)	MASS FRACTION	LIQUID VOLUME FLOW (m3/h)	LIQUID VOLUME FRACTION
NBP[1]711*	0.1715	0.0004	1.3445	0.0057	0.0642	0.0031
NBP[1]736*	0.1697	0.0004	1.3915	0.0059	0.0659	0.0032
NBP[1]762*	0.1653	0.0004	1.4214	0.0060	0.0669	0.0032
NBP[1]788*	0.1585	0.0004	1.4424	0.0061	0.0674	0.0032
NBP[1]825*	0.2655	0.0007	2.5963	0.0109	0.1201	0.0058
NBP[1]873*	0.1830	0.0005	1.9404	0.0082	0.0887	0.0043
NBP[1]926*	0.1437	0.0004	1.6472	0.0069	0.0744	0.0036
NBP[1]978*	0.1474	0.0004	1.8524	0.0078	0.0825	0.0040
NBP[1]1021*	0.0728	0.0002	0.9655	0.0041	0.0426	0.0020
NBP[1]1075*	0.0449	0.0001	0.6310	0.0027	0.0276	0.0013
NBP[1]1123*	0.0417	0.0001	0.6267	0.0026	0.0271	0.0013
NBP[1]1173*	0.0300	0.0001	0.4772	0.0020	0.0205	0.0010
NBP[1]1250*	0.0393	0.0001	0.6767	0.0028	0.0287	0.0014
NBP[1]1339*	0.0364	0.0001	0.6999	0.0029	0.0291	0.0014
NBP[1]1432*	0.0257	0.0001	0.5397	0.0023	0.0221	0.0011
NBP[1]1528*	0.0180	0.0000	0.4082	0.0017	0.0165	0.0008
NBP[1]1637*	0.0127	0.0000	0.3047	0.0013	0.0122	0.0006
NBP[1]1732*	0.0101	0.0000	0.2565	0.0011	0.0101	0.0005
NBP[1]1819*	0.0097	0.0000	0.2590	0.0011	0.0101	0.0005
NBP[1]1913*	0.0112	0.0000	0.3148	0.0013	0.0121	0.0006
Total	392.1623	1.0000	237.5489	1.0000	20.8162	1.0000

Vapour Phase

Phase Fraction 0.6693

COMPONENTS	MOLAR FLOW (kgmole/h)	MOLE FRACTION	MASS FLOW (tonne/d)	MASS FRACTION	LIQUID VOLUME FLOW (m3/h)	LIQUID VOLUME FRACTION
Methane	198.5586	0.7565	76.4509	0.5437	10.6397	0.6716
Ethane	26.4727	0.1009	19.1048	0.1359	2.2380	0.1413
Propane	13.2904	0.0506	14.0656	0.1000	1.1567	0.0730
i-Butane	1.6672	0.0064	2.3257	0.0165	0.1724	0.0109
n-Butane	3.1512	0.0120	4.3958	0.0313	0.3140	0.0198
i-Pentane	0.6210	0.0024	1.0753	0.0076	0.0719	0.0045
n-Pentane	0.6756	0.0026	1.1699	0.0083	0.0774	0.0049
n-Hexane	0.8700	0.0033	1.7994	0.0128	0.1131	0.0071
Nitrogen	5.4494	0.0208	3.6637	0.0261	0.1893	0.0119
CO2	8.6492	0.0330	9.1356	0.0650	0.4612	0.0291
H2S	0.0005	0.0000	0.0004	0.0000	0.0000	0.0000
H2O	0.2615	0.0010	0.1131	0.0008	0.0047	0.0003
NBP[1]95*	0.2026	0.0008	0.3303	0.0023	0.0202	0.0013
NBP[1]121*	0.2224	0.0008	0.3889	0.0028	0.0235	0.0015
NBP[1]147*	0.2617	0.0010	0.5037	0.0036	0.0300	0.0019
NBP[1]171*	0.4563	0.0017	0.9601	0.0068	0.0562	0.0035
NBP[1]195*	0.5397	0.0021	1.2121	0.0086	0.0701	0.0044
NBP[1]222*	0.3510	0.0013	0.8477	0.0060	0.0484	0.0031
NBP[1]248*	0.2519	0.0010	0.6543	0.0047	0.0369	0.0023
NBP[1]273*	0.1719	0.0007	0.4773	0.0034	0.0266	0.0017
NBP[1]299*	0.1115	0.0004	0.3303	0.0023	0.0182	0.0012
NBP[1]325*	0.0654	0.0002	0.2057	0.0015	0.0112	0.0007
NBP[1]351*	0.0420	0.0002	0.1406	0.0010	0.0076	0.0005
NBP[1]377*	0.0296	0.0001	0.1054	0.0007	0.0056	0.0004
NBP[1]402*	0.0206	0.0001	0.0783	0.0006	0.0042	0.0003
NBP[1]428*	0.0145	0.0001	0.0590	0.0004	0.0031	0.0002
NBP[1]454*	0.0106	0.0000	0.0458	0.0003	0.0024	0.0002
NBP[1]480*	0.0077	0.0000	0.0356	0.0003	0.0018	0.0001
NBP[1]505*	0.0053	0.0000	0.0260	0.0002	0.0013	0.0001

* Specified by user.

Material Stream: 5 (continued)

Fluid Package: Basis-1
Property Package: Peng-Robinson

COMPOSITION

Vapour Phase (continued)

Phase Fraction 0.6693

COMPONENTS	MOLAR FLOW (kgmole/h)	MOLE FRACTION	MASS FLOW (tonne/d)	MASS FRACTION	LIQUID VOLUME FLOW (m3/h)	LIQUID VOLUME FRACTION
NBP[1]531*	0.0035	0.0000	0.0185	0.0001	0.0009	0.0001
NBP[1]557*	0.0023	0.0000	0.0130	0.0001	0.0006	0.0000
NBP[1]582*	0.0015	0.0000	0.0089	0.0001	0.0004	0.0000
NBP[1]608*	0.0010	0.0000	0.0060	0.0000	0.0003	0.0000
NBP[1]634*	0.0006	0.0000	0.0041	0.0000	0.0002	0.0000
NBP[1]659*	0.0004	0.0000	0.0027	0.0000	0.0001	0.0000
NBP[1]685*	0.0003	0.0000	0.0019	0.0000	0.0001	0.0000
NBP[1]711*	0.0002	0.0000	0.0013	0.0000	0.0001	0.0000
NBP[1]736*	0.0001	0.0000	0.0009	0.0000	0.0000	0.0000
NBP[1]762*	0.0001	0.0000	0.0005	0.0000	0.0000	0.0000
NBP[1]788*	0.0000	0.0000	0.0003	0.0000	0.0000	0.0000
NBP[1]825*	0.0000	0.0000	0.0003	0.0000	0.0000	0.0000
NBP[1]873*	0.0000	0.0000	0.0001	0.0000	0.0000	0.0000
NBP[1]926*	0.0000	0.0000	0.0000	0.0000	0.0000	0.0000
NBP[1]978*	0.0000	0.0000	0.0000	0.0000	0.0000	0.0000
NBP[1]1021*	0.0000	0.0000	0.0000	0.0000	0.0000	0.0000
NBP[1]1075*	0.0000	0.0000	0.0000	0.0000	0.0000	0.0000
NBP[1]1123*	0.0000	0.0000	0.0000	0.0000	0.0000	0.0000
NBP[1]1173*	0.0000	0.0000	0.0000	0.0000	0.0000	0.0000
NBP[1]1250*	0.0000	0.0000	0.0000	0.0000	0.0000	0.0000
NBP[1]1339*	0.0000	0.0000	0.0000	0.0000	0.0000	0.0000
NBP[1]1432*	0.0000	0.0000	0.0000	0.0000	0.0000	0.0000
NBP[1]1528*	0.0000	0.0000	0.0000	0.0000	0.0000	0.0000
NBP[1]1637*	0.0007	0.0000	0.0157	0.0001	0.0006	0.0000
NBP[1]1732*	0.0101	0.0000	0.2564	0.0018	0.0101	0.0006
NBP[1]1819*	0.0097	0.0000	0.2590	0.0018	0.0101	0.0006
NBP[1]1913*	0.0112	0.0000	0.3148	0.0022	0.0121	0.0008
Total	262.4735	1.0000	140.6055	1.0000	15.8421	1.0000

Liquid Phase

Phase Fraction 5.911e-002

COMPONENTS	MOLAR FLOW (kgmole/h)	MOLE FRACTION	MASS FLOW (tonne/d)	MASS FRACTION	LIQUID VOLUME FLOW (m3/h)	LIQUID VOLUME FRACTION
Methane	8.4853	0.3660	3.2671	0.0643	0.4547	0.1492
Ethane	2.3279	0.1004	1.6800	0.0330	0.1968	0.0646
Propane	1.9774	0.0853	2.0927	0.0412	0.1721	0.0565
i-Butane	0.3615	0.0156	0.5043	0.0099	0.0374	0.0123
n-Butane	0.8001	0.0345	1.1161	0.0220	0.0797	0.0262
i-Pentane	0.2285	0.0099	0.3957	0.0078	0.0264	0.0087
n-Pentane	0.2846	0.0123	0.4928	0.0097	0.0326	0.0107
n-Hexane	0.5998	0.0259	1.2406	0.0244	0.0780	0.0256
Nitrogen	0.1459	0.0063	0.0981	0.0019	0.0051	0.0017
CO2	0.6778	0.0292	0.7159	0.0141	0.0361	0.0119
H2S	0.0001	0.0000	0.0001	0.0000	0.0000	0.0000
H2O	0.0217	0.0009	0.0094	0.0002	0.0004	0.0001
NBP[1]95*	0.0856	0.0037	0.1396	0.0027	0.0086	0.0028
NBP[1]121*	0.1157	0.0050	0.2023	0.0040	0.0122	0.0040
NBP[1]147*	0.1698	0.0073	0.3267	0.0064	0.0194	0.0064
NBP[1]171*	0.3662	0.0158	0.7705	0.0152	0.0451	0.0148
NBP[1]195*	0.5360	0.0231	1.2038	0.0237	0.0697	0.0229
NBP[1]222*	0.4494	0.0194	1.0854	0.0214	0.0620	0.0204
NBP[1]248*	0.4137	0.0178	1.0745	0.0211	0.0607	0.0199
NBP[1]273*	0.3640	0.0157	1.0108	0.0199	0.0564	0.0185
NBP[1]299*	0.3070	0.0132	0.9090	0.0179	0.0502	0.0165
NBP[1]325*	0.2375	0.0102	0.7471	0.0147	0.0408	0.0134

Licensed to: PETROCHEMICAL ENGINEERIN
* Specified by user.

Material Stream: 5 (continued)

Fluid Package: Basis-1
Property Package: Peng-Robinson

COMPOSITION

Liquid Phase (continued)

Phase Fraction 5.911e-002

COMPONENTS	MOLAR FLOW (kgmole/h)	MOLE FRACTION	MASS FLOW (tonne/d)	MASS FRACTION	LIQUID VOLUME FLOW (m3/h)	LIQUID VOLUME FRACTION
NBP[1]351*	0.2036	0.0088	0.6809	0.0134	0.0369	0.0121
NBP[1]377*	0.1952	0.0084	0.6960	0.0137	0.0373	0.0122
NBP[1]402*	0.1855	0.0080	0.7056	0.0139	0.0374	0.0123
NBP[1]428*	0.1815	0.0078	0.7366	0.0145	0.0387	0.0127
NBP[1]454*	0.1850	0.0080	0.8022	0.0158	0.0417	0.0137
NBP[1]480*	0.1905	0.0082	0.8826	0.0174	0.0454	0.0149
NBP[1]505*	0.1867	0.0081	0.9224	0.0181	0.0470	0.0154
NBP[1]531*	0.1817	0.0078	0.9555	0.0188	0.0483	0.0158
NBP[1]557*	0.1761	0.0076	0.9849	0.0194	0.0494	0.0162
NBP[1]582*	0.1691	0.0073	1.0043	0.0198	0.0499	0.0164
NBP[1]608*	0.1633	0.0070	1.0291	0.0202	0.0507	0.0166
NBP[1]634*	0.1605	0.0069	1.0712	0.0211	0.0524	0.0172
NBP[1]659*	0.1582	0.0068	1.1167	0.0220	0.0541	0.0178
NBP[1]685*	0.1639	0.0071	1.2208	0.0240	0.0587	0.0193
NBP[1]711*	0.1714	0.0074	1.3432	0.0264	0.0641	0.0210
NBP[1]736*	0.1696	0.0073	1.3907	0.0274	0.0659	0.0216
NBP[1]762*	0.1652	0.0071	1.4209	0.0279	0.0668	0.0219
NBP[1]788*	0.1584	0.0068	1.4420	0.0284	0.0674	0.0221
NBP[1]825*	0.2654	0.0114	2.5960	0.0511	0.1201	0.0394
NBP[1]873*	0.1830	0.0079	1.9403	0.0382	0.0887	0.0291
NBP[1]926*	0.1437	0.0062	1.6471	0.0324	0.0744	0.0244
NBP[1]978*	0.1474	0.0064	1.8524	0.0364	0.0825	0.0271
NBP[1]1021*	0.0728	0.0031	0.9655	0.0190	0.0426	0.0140
NBP[1]1075*	0.0449	0.0019	0.6310	0.0124	0.0276	0.0091
NBP[1]1123*	0.0417	0.0018	0.6267	0.0123	0.0271	0.0089
NBP[1]1173*	0.0300	0.0013	0.4772	0.0094	0.0205	0.0067
NBP[1]1250*	0.0393	0.0017	0.6767	0.0133	0.0287	0.0094
NBP[1]1339*	0.0364	0.0016	0.6999	0.0138	0.0291	0.0096
NBP[1]1432*	0.0257	0.0011	0.5397	0.0106	0.0221	0.0073
NBP[1]1528*	0.0180	0.0008	0.4082	0.0080	0.0165	0.0054
NBP[1]1637*	0.0120	0.0005	0.2890	0.0057	0.0116	0.0038
NBP[1]1732*	0.0000	0.0000	0.0001	0.0000	0.0000	0.0000
NBP[1]1819*	0.0000	0.0000	0.0000	0.0000	0.0000	0.0000
NBP[1]1913*	0.0000	0.0000	0.0000	0.0000	0.0000	0.0000
Total	23.1813	1.0000	50.8377	1.0000	3.0483	1.0000

Aqueous Phase

Phase Fraction 0.2716

COMPONENTS	MOLAR FLOW (kgmole/h)	MOLE FRACTION	MASS FLOW (tonne/d)	MASS FRACTION	LIQUID VOLUME FLOW (m3/h)	LIQUID VOLUME FRACTION
Methane	0.0001	0.0000	0.0000	0.0000	0.0000	0.0000
Ethane	0.0000	0.0000	0.0000	0.0000	0.0000	0.0000
Propane	0.0000	0.0000	0.0000	0.0000	0.0000	0.0000
i-Butane	0.0000	0.0000	0.0000	0.0000	0.0000	0.0000
n-Butane	0.0000	0.0000	0.0000	0.0000	0.0000	0.0000
i-Pentane	0.0000	0.0000	0.0000	0.0000	0.0000	0.0000
n-Pentane	0.0000	0.0000	0.0000	0.0000	0.0000	0.0000
n-Hexane	0.0000	0.0000	0.0000	0.0000	0.0000	0.0000
Nitrogen	0.0035	0.0000	0.0024	0.0001	0.0001	0.0001
CO2	0.0881	0.0008	0.0931	0.0020	0.0047	0.0024
H2S	0.0000	0.0000	0.0000	0.0000	0.0000	0.0000
H2O	106.4157	0.9991	46.0102	0.9979	1.9210	0.9975
NBP[1]95*	0.0000	0.0000	0.0000	0.0000	0.0000	0.0000
NBP[1]121*	0.0000	0.0000	0.0000	0.0000	0.0000	0.0000
NBP[1]147*	0.0000	0.0000	0.0000	0.0000	0.0000	0.0000

* Specified by user.

Material Stream: 5 (continued)

Fluid Package: Basis-1
Property Package: Peng-Robinson

COMPOSITION

Aqueous Phase (continued)

Phase Fraction 0.2716

COMPONENTS	MOLAR FLOW (kgmole/h)	MOLE FRACTION	MASS FLOW (tonne/d)	MASS FRACTION	LIQUID VOLUME FLOW (m3/h)	LIQUID VOLUME FRACTION
NBP[1]171*	0.0000	0.0000	0.0000	0.0000	0.0000	0.0000
NBP[1]195*	0.0000	0.0000	0.0000	0.0000	0.0000	0.0000
NBP[1]222*	0.0000	0.0000	0.0000	0.0000	0.0000	0.0000
NBP[1]248*	0.0000	0.0000	0.0000	0.0000	0.0000	0.0000
NBP[1]273*	0.0000	0.0000	0.0000	0.0000	0.0000	0.0000
NBP[1]299*	0.0000	0.0000	0.0000	0.0000	0.0000	0.0000
NBP[1]325*	0.0000	0.0000	0.0000	0.0000	0.0000	0.0000
NBP[1]351*	0.0000	0.0000	0.0000	0.0000	0.0000	0.0000
NBP[1]377*	0.0000	0.0000	0.0000	0.0000	0.0000	0.0000
NBP[1]402*	0.0000	0.0000	0.0000	0.0000	0.0000	0.0000
NBP[1]428*	0.0000	0.0000	0.0000	0.0000	0.0000	0.0000
NBP[1]454*	0.0000	0.0000	0.0000	0.0000	0.0000	0.0000
NBP[1]480*	0.0000	0.0000	0.0000	0.0000	0.0000	0.0000
NBP[1]505*	0.0000	0.0000	0.0000	0.0000	0.0000	0.0000
NBP[1]531*	0.0000	0.0000	0.0000	0.0000	0.0000	0.0000
NBP[1]557*	0.0000	0.0000	0.0000	0.0000	0.0000	0.0000
NBP[1]582*	0.0000	0.0000	0.0000	0.0000	0.0000	0.0000
NBP[1]608*	0.0000	0.0000	0.0000	0.0000	0.0000	0.0000
NBP[1]634*	0.0000	0.0000	0.0000	0.0000	0.0000	0.0000
NBP[1]659*	0.0000	0.0000	0.0000	0.0000	0.0000	0.0000
NBP[1]685*	0.0000	0.0000	0.0000	0.0000	0.0000	0.0000
NBP[1]711*	0.0000	0.0000	0.0000	0.0000	0.0000	0.0000
NBP[1]736*	0.0000	0.0000	0.0000	0.0000	0.0000	0.0000
NBP[1]762*	0.0000	0.0000	0.0000	0.0000	0.0000	0.0000
NBP[1]788*	0.0000	0.0000	0.0000	0.0000	0.0000	0.0000
NBP[1]825*	0.0000	0.0000	0.0000	0.0000	0.0000	0.0000
NBP[1]873*	0.0000	0.0000	0.0000	0.0000	0.0000	0.0000
NBP[1]926*	0.0000	0.0000	0.0000	0.0000	0.0000	0.0000
NBP[1]978*	0.0000	0.0000	0.0000	0.0000	0.0000	0.0000
NBP[1]1021*	0.0000	0.0000	0.0000	0.0000	0.0000	0.0000
NBP[1]1075*	0.0000	0.0000	0.0000	0.0000	0.0000	0.0000
NBP[1]1123*	0.0000	0.0000	0.0000	0.0000	0.0000	0.0000
NBP[1]1173*	0.0000	0.0000	0.0000	0.0000	0.0000	0.0000
NBP[1]1250*	0.0000	0.0000	0.0000	0.0000	0.0000	0.0000
NBP[1]1339*	0.0000	0.0000	0.0000	0.0000	0.0000	0.0000
NBP[1]1432*	0.0000	0.0000	0.0000	0.0000	0.0000	0.0000
NBP[1]1528*	0.0000	0.0000	0.0000	0.0000	0.0000	0.0000
NBP[1]1637*	0.0000	0.0000	0.0000	0.0000	0.0000	0.0000
NBP[1]1732*	0.0000	0.0000	0.0000	0.0000	0.0000	0.0000
NBP[1]1819*	0.0000	0.0000	0.0000	0.0000	0.0000	0.0000
NBP[1]1913*	0.0000	0.0000	0.0000	0.0000	0.0000	0.0000
Total	106.5074	1.0000	46.1056	1.0000	1.9258	1.0000

Material Stream: 6

Fluid Package: Basis-1
Property Package: Peng-Robinson

CONDITIONS

		Overall	Vapour Phase	Liquid Phase	Aqueous Phase
Vapour / Phase Fraction		0.6587	0.6587	0.0696	0.2718
Temperature:	(F)	83.74	83.74	83.74	83.74
Pressure:	(psig)	1142 *	1142	1142	1142
Molar Flow	(MMSCFD)	7.874	5.186	0.5477	2.140
Mass Flow	(tonne/d)	237.5	131.6	59.84	46.13
Std Ideal Liq Vol Flow	(barrel/day)	3142	2308	543.9	290.9

* Specified by user.

Material Stream: 6 (continued)

Fluid Package: Basis-1
Property Package: Peng-Robinson

CONDITIONS

	Overall	Vapour Phase	Liquid Phase	Aqueous Phase
Molar Enthalpy (kJ/kgmole)	-1.527e+005	-9.022e+004	-2.237e+005	-2.859e+005
Molar Entropy (kJ/kgmole-C)	125.5	148.2	186.9	54.65
Heat Flow (MMBtu/hr)	-56.75	-22.09	-5.784	-28.88
Liq Vol Flow @Std Cond (barrel/day)	2.954e+005 *	9.183e+005	520.8	285.8

PROPERTIES

	Overall	Vapour Phase	Liquid Phase	Aqueous Phase
Molecular Weight	25.24	21.23	91.39	18.04
Molar Density (kgmole/m3)	5.810	4.162	7.749	55.85
Mass Density (kg/m3)	146.6	88.34	708.1	1007
Act. Volume Flow (barrel/day)	1.019e+004	9369	531.5	288.1
Mass Enthalpy (kJ/kg)	-6049	-4250	-2448	-1.585e+004
Mass Entropy (kJ/kg-C)	4.971	6.983	2.045	3.030
Heat Capacity (kJ/kgmole-C)	73.60	59.58	191.0	77.55
Mass Heat Capacity (kJ/kg-C)	2.916	2.807	2.090	4.300
LHV Molar Basis (Std) (Btu/SCF)	---	---	---	3.663e-004
LHV Mass Basis (Std) (kJ/kg)	---	---	---	1.793e-002
Phase Fraction [Vol. Basis]	0.7343	0.7343	0.1731	9.256e-002
Phase Fraction [Mass Basis]	0.5539	0.5539	0.2519	0.1942
Partial Pressure of CO2 (psig)	23.99	---	---	---
Cost Based on Flow (Cost/s)	0.0000	0.0000	0.0000	0.0000
Act. Gas Flow (ACT_m3/h)	62.06	62.06	---	---
Avg. Liq. Density (kgmole/m3)	18.84	16.90	7.571	55.31
Specific Heat (kJ/kgmole-C)	73.60	59.58	191.0	77.55
Std. Gas Flow (STD_m3/h)	9272	6107	645.1	2520
Std. Ideal Liq. Mass Density (kg/m3)	475.5	358.7	691.9	997.6
Act. Liq. Flow (barrel/day)	819.6	---	531.5	288.1
Z Factor	---	0.7631	0.4099	5.687e-002
Watson K	15.58	17.30	12.30	8.487
User Property	---	---	---	---
Partial Pressure of H2S (psig)	-14.69	---	---	---
Cp/(Cp - R)	1.127	1.162	1.046	1.120
Cp/Cv	1.299	1.718	1.295	1.148
Heat of Vap. (kJ/kgmole)	4.656e+004	---	---	---
Kinematic Viscosity (cSt)	---	0.1610	2.310	0.8134
Liq. Mass Density (Std. Cond) (kg/m3)	5.058	0.9012	722.6	1015
Liq. Vol. Flow (Std. Cond) (barrel/day)	2.954e+005	9.183e+005	520.8	285.8
Liquid Fraction	0.3413	0.0000	1.000	1.000
Molar Volume (m3/kgmole)	0.1721	0.2403	0.1291	1.791e-002
Mass Heat of Vap. (kJ/kg)	1845	---	---	---
Phase Fraction [Molar Basis]	0.6587	0.6587	0.0696	0.2718
Surface Tension (dyne/cm)	---	---	11.07	71.40
Thermal Conductivity (W/m-K)	---	3.962e-002	9.033e-002	0.6165
Viscosity (cP)	---	1.422e-002	1.636	0.8192
Cv (Semi-Ideal) (kJ/kgmole-C)	65.29	51.27	182.6	69.23
Mass Cv (Semi-Ideal) (kJ/kg-C)	2.587	2.415	1.999	3.839
Cv (kJ/kgmole-C)	56.67	34.69	147.4	67.53
Mass Cv (kJ/kg-C)	2.245	1.634	1.613	3.744
Cv (Ent. Method) (kJ/kgmole-C)	---	---	155.6	66.42
Mass Cv (Ent. Method) (kJ/kg-C)	---	---	1.703	3.683
Cp/Cv (Ent. Method)	---	---	1.227	1.167
Reid VP at 37.8 C (psig)	3319	---	273.7	---
True VP at 37.8 C (psig)	6318	---	1221	71.73
Liq. Vol. Flow - Sum(Std. Cond) (barrel/day)	9.191e+005	9.183e+005	520.8	285.8
HHV Molar Basis (Std) (Btu/SCF)	---	---	---	46.43
HHV Mass Basis (Std) (kJ/kg)	---	---	---	2272
CO2 Loading	---	---	---	---

* Specified by user.

Material Stream: 6 (continued)

Fluid Package: Basis-1
Property Package: Peng-Robinson

PROPERTIES

	Overall	Vapour Phase	Liquid Phase	Aqueous Phase
CO2 App ML Con (kgmole/m3)	---	---	0.1962	4.262e-002
CO2 App WT Con (kgmol/kg)	---	---	2.771e-004	4.232e-005
Phase Fraction [Act. Vol. Basis]	0.9196	0.9196	5.217e-002	2.828e-002
Mass Exergy (kJ/kg)	286.6	---	---	---
Viscosity Index	-25.54	---	---	---
Ideal Gas Cp/Cv	1.217	1.251	1.060	1.329
Ideal Gas Cp (kJ/kgmole-C)	46.67	41.49	146.8	33.60
Mass Ideal Gas Cp (kJ/kg-C)	1.849	1.955	1.606	1.863
Bubble Point Pressure (psig)	6295	---	---	---

COMPOSITION

Overall Phase

Vapour Fraction 0.6587

COMPONENTS	MOLAR FLOW (kgmole/h)	MOLE FRACTION	MASS FLOW (tonne/d)	MASS FRACTION	LIQUID VOLUME FLOW (m3/h)	LIQUID VOLUME FRACTION
Methane	207.0440	0.5280	79.7181	0.3356	11.0944	0.5330
Ethane	28.8006	0.0734	20.7848	0.0875	2.4348	0.1170
Propane	15.2677	0.0389	16.1583	0.0680	1.3288	0.0638
i-Butane	2.0287	0.0052	2.8300	0.0119	0.2098	0.0101
n-Butane	3.9513	0.0101	5.5120	0.0232	0.3938	0.0189
i-Pentane	0.8495	0.0022	1.4710	0.0062	0.0983	0.0047
n-Pentane	0.9602	0.0024	1.6627	0.0070	0.1100	0.0053
n-Hexane	1.4698	0.0037	3.0399	0.0128	0.1911	0.0092
Nitrogen	5.5989	0.0143	3.7642	0.0158	0.1945	0.0093
CO2	9.4151	0.0240	9.9445	0.0419	0.5020	0.0241
H2S	0.0006	0.0000	0.0005	0.0000	0.0000	0.0000
H2O	106.6990	0.2721	46.1326	0.1942	1.9261	0.0925
NBP[1]95*	0.2883	0.0007	0.4699	0.0020	0.0288	0.0014
NBP[1]121*	0.3381	0.0009	0.5912	0.0025	0.0358	0.0017
NBP[1]147*	0.4314	0.0011	0.8304	0.0035	0.0494	0.0024
NBP[1]171*	0.8224	0.0021	1.7306	0.0073	0.1013	0.0049
NBP[1]195*	1.0758	0.0027	2.4160	0.0102	0.1398	0.0067
NBP[1]222*	0.8003	0.0020	1.9331	0.0081	0.1105	0.0053
NBP[1]248*	0.6657	0.0017	1.7287	0.0073	0.0976	0.0047
NBP[1]273*	0.5358	0.0014	1.4881	0.0063	0.0831	0.0040
NBP[1]299*	0.4185	0.0011	1.2393	0.0052	0.0684	0.0033
NBP[1]325*	0.3029	0.0008	0.9528	0.0040	0.0521	0.0025
NBP[1]351*	0.2456	0.0006	0.8214	0.0035	0.0445	0.0021
NBP[1]377*	0.2247	0.0006	0.8014	0.0034	0.0429	0.0021
NBP[1]402*	0.2061	0.0005	0.7838	0.0033	0.0416	0.0020
NBP[1]428*	0.1961	0.0005	0.7956	0.0033	0.0418	0.0020
NBP[1]454*	0.1956	0.0005	0.8480	0.0036	0.0441	0.0021
NBP[1]480*	0.1982	0.0005	0.9182	0.0039	0.0473	0.0023
NBP[1]505*	0.1920	0.0005	0.9484	0.0040	0.0484	0.0023
NBP[1]531*	0.1852	0.0005	0.9740	0.0041	0.0492	0.0024
NBP[1]557*	0.1784	0.0005	0.9978	0.0042	0.0500	0.0024
NBP[1]582*	0.1706	0.0004	1.0132	0.0043	0.0503	0.0024
NBP[1]608*	0.1643	0.0004	1.0351	0.0044	0.0510	0.0025
NBP[1]634*	0.1611	0.0004	1.0753	0.0045	0.0526	0.0025
NBP[1]659*	0.1586	0.0004	1.1194	0.0047	0.0543	0.0026
NBP[1]685*	0.1641	0.0004	1.2227	0.0051	0.0588	0.0028
NBP[1]711*	0.1715	0.0004	1.3445	0.0057	0.0642	0.0031
NBP[1]736*	0.1697	0.0004	1.3915	0.0059	0.0659	0.0032
NBP[1]762*	0.1653	0.0004	1.4214	0.0060	0.0669	0.0032
NBP[1]788*	0.1585	0.0004	1.4424	0.0061	0.0674	0.0032
NBP[1]825*	0.2655	0.0007	2.5963	0.0109	0.1201	0.0058
NBP[1]873*	0.1830	0.0005	1.9404	0.0082	0.0887	0.0043

* Specified by user.

Material Stream: 6 (continued)

Fluid Package: Basis-1
Property Package: Peng-Robinson

COMPOSITION

Overall Phase (continued)

Vapour Fraction 0.6587

COMPONENTS	MOLAR FLOW (kgmole/h)	MOLE FRACTION	MASS FLOW (tonne/d)	MASS FRACTION	LIQUID VOLUME FLOW (m3/h)	LIQUID VOLUME FRACTION
NBP[1]926*	0.1437	0.0004	1.6472	0.0069	0.0744	0.0036
NBP[1]978*	0.1474	0.0004	1.8524	0.0078	0.0825	0.0040
NBP[1]1021*	0.0728	0.0002	0.9655	0.0041	0.0426	0.0020
NBP[1]1075*	0.0449	0.0001	0.6310	0.0027	0.0276	0.0013
NBP[1]1123*	0.0417	0.0001	0.6267	0.0026	0.0271	0.0013
NBP[1]1173*	0.0300	0.0001	0.4772	0.0020	0.0205	0.0010
NBP[1]1250*	0.0393	0.0001	0.6767	0.0028	0.0287	0.0014
NBP[1]1339*	0.0364	0.0001	0.6999	0.0029	0.0291	0.0014
NBP[1]1432*	0.0257	0.0001	0.5397	0.0023	0.0221	0.0011
NBP[1]1528*	0.0180	0.0000	0.4082	0.0017	0.0165	0.0008
NBP[1]1637*	0.0127	0.0000	0.3047	0.0013	0.0122	0.0006
NBP[1]1732*	0.0101	0.0000	0.2565	0.0011	0.0101	0.0005
NBP[1]1819*	0.0097	0.0000	0.2590	0.0011	0.0101	0.0005
NBP[1]1913*	0.0112	0.0000	0.3148	0.0013	0.0121	0.0006
Total	392.1623	1.0000	237.5489	1.0000	20.8162	1.0000

Vapour Phase

Phase Fraction 0.6587

COMPONENTS	MOLAR FLOW (kgmole/h)	MOLE FRACTION	MASS FLOW (tonne/d)	MASS FRACTION	LIQUID VOLUME FLOW (m3/h)	LIQUID VOLUME FRACTION
Methane	199.9149	0.7740	76.9732	0.5850	10.7124	0.7008
Ethane	25.9268	0.1004	18.7108	0.1422	2.1919	0.1434
Propane	12.1437	0.0470	12.8521	0.0977	1.0569	0.0691
i-Butane	1.3760	0.0053	1.9195	0.0146	0.1423	0.0093
n-Butane	2.4696	0.0096	3.4451	0.0262	0.2461	0.0161
i-Pentane	0.4045	0.0016	0.7005	0.0053	0.0468	0.0031
n-Pentane	0.4094	0.0016	0.7090	0.0054	0.0469	0.0031
n-Hexane	0.3725	0.0014	0.7705	0.0059	0.0484	0.0032
Nitrogen	5.5015	0.0213	3.6987	0.0281	0.1911	0.0125
CO2	8.6429	0.0335	9.1290	0.0694	0.4609	0.0301
H2S	0.0005	0.0000	0.0004	0.0000	0.0000	0.0000
H2O	0.1864	0.0007	0.0806	0.0006	0.0034	0.0002
NBP[1]95*	0.1243	0.0005	0.2026	0.0015	0.0124	0.0008
NBP[1]121*	0.1193	0.0005	0.2086	0.0016	0.0126	0.0008
NBP[1]147*	0.1201	0.0005	0.2311	0.0018	0.0137	0.0009
NBP[1]171*	0.1782	0.0007	0.3750	0.0029	0.0220	0.0014
NBP[1]195*	0.1775	0.0007	0.3987	0.0030	0.0231	0.0015
NBP[1]222*	0.0932	0.0004	0.2250	0.0017	0.0129	0.0008
NBP[1]248*	0.0542	0.0002	0.1408	0.0011	0.0080	0.0005
NBP[1]273*	0.0299	0.0001	0.0831	0.0006	0.0046	0.0003
NBP[1]299*	0.0157	0.0001	0.0465	0.0004	0.0026	0.0002
NBP[1]325*	0.0074	0.0000	0.0233	0.0002	0.0013	0.0001
NBP[1]351*	0.0038	0.0000	0.0128	0.0001	0.0007	0.0000
NBP[1]377*	0.0022	0.0000	0.0077	0.0001	0.0004	0.0000
NBP[1]402*	0.0012	0.0000	0.0046	0.0000	0.0002	0.0000
NBP[1]428*	0.0007	0.0000	0.0028	0.0000	0.0001	0.0000
NBP[1]454*	0.0004	0.0000	0.0018	0.0000	0.0001	0.0000
NBP[1]480*	0.0002	0.0000	0.0011	0.0000	0.0001	0.0000
NBP[1]505*	0.0001	0.0000	0.0006	0.0000	0.0000	0.0000
NBP[1]531*	0.0001	0.0000	0.0004	0.0000	0.0000	0.0000
NBP[1]557*	0.0000	0.0000	0.0002	0.0000	0.0000	0.0000
NBP[1]582*	0.0000	0.0000	0.0001	0.0000	0.0000	0.0000
NBP[1]608*	0.0000	0.0000	0.0001	0.0000	0.0000	0.0000
NBP[1]634*	0.0000	0.0000	0.0000	0.0000	0.0000	0.0000
NBP[1]659*	0.0000	0.0000	0.0000	0.0000	0.0000	0.0000

* Specified by user.

Material Stream: 6 (continued)

Fluid Package: Basis-1
Property Package: Peng-Robinson

COMPOSITION

Vapour Phase (continued)

Phase Fraction 0.6587

COMPONENTS	MOLAR FLOW (kgmole/h)	MOLE FRACTION	MASS FLOW (tonne/d)	MASS FRACTION	LIQUID VOLUME FLOW (m3/h)	LIQUID VOLUME FRACTION
NBP[1]685*	0.0000	0.0000	0.0000	0.0000	0.0000	0.0000
NBP[1]711*	0.0000	0.0000	0.0000	0.0000	0.0000	0.0000
NBP[1]736*	0.0000	0.0000	0.0000	0.0000	0.0000	0.0000
NBP[1]762*	0.0000	0.0000	0.0000	0.0000	0.0000	0.0000
NBP[1]788*	0.0000	0.0000	0.0000	0.0000	0.0000	0.0000
NBP[1]825*	0.0000	0.0000	0.0000	0.0000	0.0000	0.0000
NBP[1]873*	0.0000	0.0000	0.0000	0.0000	0.0000	0.0000
NBP[1]926*	0.0000	0.0000	0.0000	0.0000	0.0000	0.0000
NBP[1]978*	0.0000	0.0000	0.0000	0.0000	0.0000	0.0000
NBP[1]1021*	0.0000	0.0000	0.0000	0.0000	0.0000	0.0000
NBP[1]1075*	0.0000	0.0000	0.0000	0.0000	0.0000	0.0000
NBP[1]1123*	0.0000	0.0000	0.0000	0.0000	0.0000	0.0000
NBP[1]1173*	0.0000	0.0000	0.0000	0.0000	0.0000	0.0000
NBP[1]1250*	0.0000	0.0000	0.0000	0.0000	0.0000	0.0000
NBP[1]1339*	0.0000	0.0000	0.0000	0.0000	0.0000	0.0000
NBP[1]1432*	0.0000	0.0000	0.0000	0.0000	0.0000	0.0000
NBP[1]1528*	0.0000	0.0000	0.0000	0.0000	0.0000	0.0000
NBP[1]1637*	0.0000	0.0000	0.0000	0.0000	0.0000	0.0000
NBP[1]1732*	0.0019	0.0000	0.0489	0.0004	0.0019	0.0001
NBP[1]1819*	0.0097	0.0000	0.2590	0.0020	0.0101	0.0007
NBP[1]1913*	0.0112	0.0000	0.3148	0.0024	0.0121	0.0008
Total	258.3003	1.0000	131.5786	1.0000	15.2861	1.0000

Liquid Phase

Phase Fraction 6.957e-002

COMPONENTS	MOLAR FLOW (kgmole/h)	MOLE FRACTION	MASS FLOW (tonne/d)	MASS FRACTION	LIQUID VOLUME FLOW (m3/h)	LIQUID VOLUME FRACTION
Methane	7.1291	0.2613	2.7449	0.0459	0.3820	0.1060
Ethane	2.8738	0.1053	2.0740	0.0347	0.2430	0.0674
Propane	3.1240	0.1145	3.3062	0.0553	0.2719	0.0755
i-Butane	0.6527	0.0239	0.9105	0.0152	0.0675	0.0187
n-Butane	1.4817	0.0543	2.0669	0.0345	0.1477	0.0410
i-Pentane	0.4450	0.0163	0.7705	0.0129	0.0515	0.0143
n-Pentane	0.5508	0.0202	0.9538	0.0159	0.0631	0.0175
n-Hexane	1.0973	0.0402	2.2695	0.0379	0.1427	0.0396
Nitrogen	0.0952	0.0035	0.0640	0.0011	0.0033	0.0009
CO2	0.6908	0.0253	0.7296	0.0122	0.0368	0.0102
H2S	0.0001	0.0000	0.0001	0.0000	0.0000	0.0000
H2O	0.0158	0.0006	0.0068	0.0001	0.0003	0.0001
NBP[1]95*	0.1640	0.0060	0.2673	0.0045	0.0164	0.0045
NBP[1]121*	0.2188	0.0080	0.3826	0.0064	0.0231	0.0064
NBP[1]147*	0.3114	0.0114	0.5993	0.0100	0.0356	0.0099
NBP[1]171*	0.6442	0.0236	1.3556	0.0227	0.0793	0.0220
NBP[1]195*	0.8983	0.0329	2.0173	0.0337	0.1167	0.0324
NBP[1]222*	0.7072	0.0259	1.7081	0.0285	0.0976	0.0271
NBP[1]248*	0.6114	0.0224	1.5879	0.0265	0.0897	0.0249
NBP[1]273*	0.5059	0.0185	1.4050	0.0235	0.0784	0.0218
NBP[1]299*	0.4028	0.0148	1.1928	0.0199	0.0659	0.0183
NBP[1]325*	0.2955	0.0108	0.9295	0.0155	0.0508	0.0141
NBP[1]351*	0.2418	0.0089	0.8086	0.0135	0.0438	0.0121
NBP[1]377*	0.2226	0.0082	0.7937	0.0133	0.0425	0.0118
NBP[1]402*	0.2049	0.0075	0.7792	0.0130	0.0413	0.0115
NBP[1]428*	0.1954	0.0072	0.7928	0.0132	0.0416	0.0116
NBP[1]454*	0.1952	0.0072	0.8463	0.0141	0.0440	0.0122
NBP[1]480*	0.1979	0.0073	0.9171	0.0153	0.0472	0.0131

* Specified by user.

Material Stream: 6 (continued)

Fluid Package: Basis-1
Property Package: Peng-Robinson

COMPOSITION

Liquid Phase (continued)

Phase Fraction 6.957e-002

COMPONENTS	MOLAR FLOW (kgmole/h)	MOLE FRACTION	MASS FLOW (tonne/d)	MASS FRACTION	LIQUID VOLUME FLOW (m3/h)	LIQUID VOLUME FRACTION
NBP[1]505*	0.1919	0.0070	0.9477	0.0158	0.0483	0.0134
NBP[1]531*	0.1852	0.0068	0.9736	0.0163	0.0492	0.0137
NBP[1]557*	0.1784	0.0065	0.9976	0.0167	0.0500	0.0139
NBP[1]582*	0.1706	0.0063	1.0131	0.0169	0.0503	0.0140
NBP[1]608*	0.1643	0.0060	1.0350	0.0173	0.0510	0.0142
NBP[1]634*	0.1611	0.0059	1.0753	0.0180	0.0526	0.0146
NBP[1]659*	0.1586	0.0058	1.1194	0.0187	0.0543	0.0151
NBP[1]685*	0.1641	0.0060	1.2227	0.0204	0.0588	0.0163
NBP[1]711*	0.1715	0.0063	1.3445	0.0225	0.0642	0.0178
NBP[1]736*	0.1697	0.0062	1.3915	0.0233	0.0659	0.0183
NBP[1]762*	0.1653	0.0061	1.4214	0.0238	0.0669	0.0186
NBP[1]788*	0.1585	0.0058	1.4424	0.0241	0.0674	0.0187
NBP[1]825*	0.2655	0.0097	2.5963	0.0434	0.1201	0.0333
NBP[1]873*	0.1830	0.0067	1.9404	0.0324	0.0887	0.0246
NBP[1]926*	0.1437	0.0053	1.6472	0.0275	0.0744	0.0207
NBP[1]978*	0.1474	0.0054	1.8524	0.0310	0.0825	0.0229
NBP[1]1021*	0.0728	0.0027	0.9655	0.0161	0.0426	0.0118
NBP[1]1075*	0.0449	0.0016	0.6310	0.0105	0.0276	0.0077
NBP[1]1123*	0.0417	0.0015	0.6267	0.0105	0.0271	0.0075
NBP[1]1173*	0.0300	0.0011	0.4772	0.0080	0.0205	0.0057
NBP[1]1250*	0.0393	0.0014	0.6767	0.0113	0.0287	0.0080
NBP[1]1339*	0.0364	0.0013	0.6999	0.0117	0.0291	0.0081
NBP[1]1432*	0.0257	0.0009	0.5397	0.0090	0.0221	0.0061
NBP[1]1528*	0.0180	0.0007	0.4082	0.0068	0.0165	0.0046
NBP[1]1637*	0.0127	0.0005	0.3047	0.0051	0.0122	0.0034
NBP[1]1732*	0.0082	0.0003	0.2076	0.0035	0.0082	0.0023
NBP[1]1819*	0.0000	0.0000	0.0000	0.0000	0.0000	0.0000
NBP[1]1913*	0.0000	0.0000	0.0000	0.0000	0.0000	0.0000
Total	27.2817	1.0000	59.8377	1.0000	3.6033	1.0000

Aqueous Phase

Phase Fraction 0.2718

COMPONENTS	MOLAR FLOW (kgmole/h)	MOLE FRACTION	MASS FLOW (tonne/d)	MASS FRACTION	LIQUID VOLUME FLOW (m3/h)	LIQUID VOLUME FRACTION
Methane	0.0000	0.0000	0.0000	0.0000	0.0000	0.0000
Ethane	0.0000	0.0000	0.0000	0.0000	0.0000	0.0000
Propane	0.0000	0.0000	0.0000	0.0000	0.0000	0.0000
i-Butane	0.0000	0.0000	0.0000	0.0000	0.0000	0.0000
n-Butane	0.0000	0.0000	0.0000	0.0000	0.0000	0.0000
i-Pentane	0.0000	0.0000	0.0000	0.0000	0.0000	0.0000
n-Pentane	0.0000	0.0000	0.0000	0.0000	0.0000	0.0000
n-Hexane	0.0000	0.0000	0.0000	0.0000	0.0000	0.0000
Nitrogen	0.0022	0.0000	0.0015	0.0000	0.0001	0.0000
CO2	0.0813	0.0008	0.0859	0.0019	0.0043	0.0023
H2S	0.0000	0.0000	0.0000	0.0000	0.0000	0.0000
H2O	106.4967	0.9992	46.0452	0.9981	1.9224	0.9977
NBP[1]95*	0.0000	0.0000	0.0000	0.0000	0.0000	0.0000
NBP[1]121*	0.0000	0.0000	0.0000	0.0000	0.0000	0.0000
NBP[1]147*	0.0000	0.0000	0.0000	0.0000	0.0000	0.0000
NBP[1]171*	0.0000	0.0000	0.0000	0.0000	0.0000	0.0000
NBP[1]195*	0.0000	0.0000	0.0000	0.0000	0.0000	0.0000
NBP[1]222*	0.0000	0.0000	0.0000	0.0000	0.0000	0.0000
NBP[1]248*	0.0000	0.0000	0.0000	0.0000	0.0000	0.0000
NBP[1]273*	0.0000	0.0000	0.0000	0.0000	0.0000	0.0000
NBP[1]299*	0.0000	0.0000	0.0000	0.0000	0.0000	0.0000

* Specified by user.

Material Stream: 6 (continued)

Fluid Package: Basis-1
Property Package: Peng-Robinson

COMPOSITION

Aqueous Phase (continued)

Phase Fraction 0.2718

COMPONENTS	MOLAR FLOW (kgmole/h)	MOLE FRACTION	MASS FLOW (tonne/d)	MASS FRACTION	LIQUID VOLUME FLOW (m3/h)	LIQUID VOLUME FRACTION
NBP[1]325*	0.0000	0.0000	0.0000	0.0000	0.0000	0.0000
NBP[1]351*	0.0000	0.0000	0.0000	0.0000	0.0000	0.0000
NBP[1]377*	0.0000	0.0000	0.0000	0.0000	0.0000	0.0000
NBP[1]402*	0.0000	0.0000	0.0000	0.0000	0.0000	0.0000
NBP[1]428*	0.0000	0.0000	0.0000	0.0000	0.0000	0.0000
NBP[1]454*	0.0000	0.0000	0.0000	0.0000	0.0000	0.0000
NBP[1]480*	0.0000	0.0000	0.0000	0.0000	0.0000	0.0000
NBP[1]505*	0.0000	0.0000	0.0000	0.0000	0.0000	0.0000
NBP[1]531*	0.0000	0.0000	0.0000	0.0000	0.0000	0.0000
NBP[1]557*	0.0000	0.0000	0.0000	0.0000	0.0000	0.0000
NBP[1]582*	0.0000	0.0000	0.0000	0.0000	0.0000	0.0000
NBP[1]608*	0.0000	0.0000	0.0000	0.0000	0.0000	0.0000
NBP[1]634*	0.0000	0.0000	0.0000	0.0000	0.0000	0.0000
NBP[1]659*	0.0000	0.0000	0.0000	0.0000	0.0000	0.0000
NBP[1]685*	0.0000	0.0000	0.0000	0.0000	0.0000	0.0000
NBP[1]711*	0.0000	0.0000	0.0000	0.0000	0.0000	0.0000
NBP[1]736*	0.0000	0.0000	0.0000	0.0000	0.0000	0.0000
NBP[1]762*	0.0000	0.0000	0.0000	0.0000	0.0000	0.0000
NBP[1]788*	0.0000	0.0000	0.0000	0.0000	0.0000	0.0000
NBP[1]825*	0.0000	0.0000	0.0000	0.0000	0.0000	0.0000
NBP[1]873*	0.0000	0.0000	0.0000	0.0000	0.0000	0.0000
NBP[1]926*	0.0000	0.0000	0.0000	0.0000	0.0000	0.0000
NBP[1]978*	0.0000	0.0000	0.0000	0.0000	0.0000	0.0000
NBP[1]1021*	0.0000	0.0000	0.0000	0.0000	0.0000	0.0000
NBP[1]1075*	0.0000	0.0000	0.0000	0.0000	0.0000	0.0000
NBP[1]1123*	0.0000	0.0000	0.0000	0.0000	0.0000	0.0000
NBP[1]1173*	0.0000	0.0000	0.0000	0.0000	0.0000	0.0000
NBP[1]1250*	0.0000	0.0000	0.0000	0.0000	0.0000	0.0000
NBP[1]1339*	0.0000	0.0000	0.0000	0.0000	0.0000	0.0000
NBP[1]1432*	0.0000	0.0000	0.0000	0.0000	0.0000	0.0000
NBP[1]1528*	0.0000	0.0000	0.0000	0.0000	0.0000	0.0000
NBP[1]1637*	0.0000	0.0000	0.0000	0.0000	0.0000	0.0000
NBP[1]1732*	0.0000	0.0000	0.0000	0.0000	0.0000	0.0000
NBP[1]1819*	0.0000	0.0000	0.0000	0.0000	0.0000	0.0000
NBP[1]1913*	0.0000	0.0000	0.0000	0.0000	0.0000	0.0000
Total	106.5803	1.0000	46.1326	1.0000	1.9268	1.0000

Material Stream: 7

Fluid Package: Basis-1
Property Package: Peng-Robinson

CONDITIONS

		Overall	Vapour Phase	Liquid Phase	Aqueous Phase
Vapour / Phase Fraction		0.6935	0.6935	0.0375	0.2690
Temperature:	(F)	135.0 *	135.0	135.0	135.0
Pressure:	(psig)	650.0	650.0	650.0	650.0
Molar Flow	(MMSCFD)	7.874	5.461	0.2953	2.118
Mass Flow	(tonne/d)	237.5	143.0	48.88	45.63
Std Ideal Liq Vol Flow	(barrel/day)	3142	2457	397.7	287.6
Molar Enthalpy	(kJ/kgmole)	-1.498e+005	-8.943e+004	-3.048e+005	-2.837e+005
Molar Entropy	(kJ/kgmole-C)	137.5	159.8	268.6	61.65
Heat Flow	(MMBtu/hr)	-55.66	-23.05	-4.249	-28.36
Liq Vol Flow @Std Cond	(barrel/day)	2.954e+005 *	9.667e+005	384.8	282.8

* Specified by user.

Material Stream: 7 (continued)

Fluid Package: Basis-1
Property Package: Peng-Robinson

PROPERTIES

	Overall	Vapour Phase	Liquid Phase	Aqueous Phase
Molecular Weight	25.24	21.91	138.5	18.02
Molar Density (kgmole/m3)	2.633	1.884	5.486	54.61
Mass Density (kg/m3)	66.45	41.29	759.6	984.3
Act. Volume Flow (barrel/day)	2.249e+004	2.179e+004	404.7	291.6
Mass Enthalpy (kJ/kg)	-5933	-4081	-2201	-1.574e+004
Mass Entropy (kJ/kg-C)	5.448	7.293	1.940	3.421
Heat Capacity (kJ/kgmole-C)	67.30	51.03	292.8	77.83
Mass Heat Capacity (kJ/kg-C)	2.667	2.328	2.115	4.318
LHV Molar Basis (Std) (Btu/SCF)	---	---	---	9.368e-004
LHV Mass Basis (Std) (kJ/kg)	---	---	---	4.587e-002
Phase Fraction [Vol. Basis]	0.7819	0.7819	0.1266	9.153e-002
Phase Fraction [Mass Basis]	0.6022	0.6022	0.2058	0.1921
Partial Pressure of CO2 (psig)	7.736	---	---	---
Cost Based on Flow (Cost/s)	0.0000	0.0000	0.0000	0.0000
Act. Gas Flow (ACT_m3/h)	144.3	144.3	---	---
Avg. Liq. Density (kgmole/m3)	18.84	16.71	5.582	55.36
Specific Heat (kJ/kgmole-C)	67.30	51.03	292.8	77.83
Std. Gas Flow (STD_m3/h)	9272	6431	347.8	2494
Std. Ideal Liq. Mass Density (kg/m3)	475.5	366.2	772.9	997.8
Act. Liq. Flow (barrel/day)	696.3	---	404.7	291.6
Z Factor	---	0.8855	0.3041	3.055e-002
Watson K	15.58	17.11	11.91	8.500
User Property	---	---	---	---
Partial Pressure of H2S (psig)	-14.69	---	---	---
Cp/(Cp - R)	1.141	1.195	1.029	1.120
Cp/Cv	1.176	1.390	1.209	1.162
Heat of Vap. (kJ/kgmole)	6.759e+004	---	---	---
Kinematic Viscosity (cSt)	---	0.3236	1.201	0.4912
Liq. Mass Density (Std. Cond) (kg/m3)	5.058	0.9307	798.9	1015
Liq. Vol. Flow (Std. Cond) (barrel/day)	2.954e+005	9.667e+005	384.8	282.8
Liquid Fraction	0.3065	0.0000	1.000	1.000
Molar Volume (m3/kgmole)	0.3798	0.5307	0.1823	1.831e-002
Mass Heat of Vap. (kJ/kg)	2678	---	---	---
Phase Fraction [Molar Basis]	0.6935	0.6935	0.0375	0.2690
Surface Tension (dyne/cm)	---	---	14.63	66.43
Thermal Conductivity (W/m-K)	---	3.759e-002	9.681e-002	0.6508
Viscosity (cP)	---	1.336e-002	0.9123	0.4835
Cv (Semi-Ideal) (kJ/kgmole-C)	58.99	42.71	284.5	69.52
Mass Cv (Semi-Ideal) (kJ/kg-C)	2.337	1.949	2.055	3.857
Cv (kJ/kgmole-C)	57.23	36.72	242.2	67.01
Mass Cv (kJ/kg-C)	2.267	1.676	1.749	3.718
Cv (Ent. Method) (kJ/kgmole-C)	---	-4158	---	65.77
Mass Cv (Ent. Method) (kJ/kg-C)	---	-189.7	---	3.649
Cp/Cv (Ent. Method)	---	-1.227e-002	---	1.183
Reid VP at 37.8 C (psig)	3319	---	98.73	---
True VP at 37.8 C (psig)	6318	5193	571.5	178.1
Liq. Vol. Flow - Sum(Std. Cond) (barrel/day)	9.674e+005	9.667e+005	384.8	282.8
HHV Molar Basis (Std) (Btu/SCF)	---	---	---	46.45
HHV Mass Basis (Std) (kJ/kg)	---	---	---	2275
CO2 Loading	---	---	---	---
CO2 App ML Con (kgmole/m3)	---	---	7.501e-002	1.833e-002
CO2 App WT Con (kgmol/kg)	---	---	9.874e-005	1.862e-005
Phase Fraction [Act. Vol. Basis]	0.9690	0.9690	1.800e-002	1.297e-002
Mass Exergy (kJ/kg)	260.5	---	---	---
Viscosity Index	-27.58	---	---	---
Ideal Gas Cp/Cv	1.206	1.231	1.036	1.327
Ideal Gas Cp (kJ/kgmole-C)	48.67	44.31	236.2	33.77

* Specified by user.

Material Stream: 7 (continued)

Fluid Package: Basis-1
Property Package: Peng-Robinson

PROPERTIES

	Overall	Vapour Phase	Liquid Phase	Aqueous Phase
Mass Ideal Gas Cp (kJ/kg-C)	1.928	2.022	1.706	1.874
Bubble Point Pressure (psig)	6183	---	---	---

COMPOSITION

Overall Phase

Vapour Fraction 0.6935

COMPONENTS	MOLAR FLOW (kgmole/h)	MOLE FRACTION	MASS FLOW (tonne/d)	MASS FRACTION	LIQUID VOLUME FLOW (m3/h)	LIQUID VOLUME FRACTION
Methane	207.0440	0.5280	79.7181	0.3356	11.0944	0.5330
Ethane	28.8006	0.0734	20.7848	0.0875	2.4348	0.1170
Propane	15.2677	0.0389	16.1583	0.0680	1.3288	0.0638
i-Butane	2.0287	0.0052	2.8300	0.0119	0.2098	0.0101
n-Butane	3.9513	0.0101	5.5120	0.0232	0.3938	0.0189
i-Pentane	0.8495	0.0022	1.4710	0.0062	0.0983	0.0047
n-Pentane	0.9602	0.0024	1.6627	0.0070	0.1100	0.0053
n-Hexane	1.4698	0.0037	3.0399	0.0128	0.1911	0.0092
Nitrogen	5.5989	0.0143	3.7642	0.0158	0.1945	0.0093
CO2	9.4151	0.0240	9.9445	0.0419	0.5020	0.0241
H2S	0.0006	0.0000	0.0005	0.0000	0.0000	0.0000
H2O	106.6990	0.2721	46.1326	0.1942	1.9261	0.0925
NBP[1]95*	0.2883	0.0007	0.4699	0.0020	0.0288	0.0014
NBP[1]121*	0.3381	0.0009	0.5912	0.0025	0.0358	0.0017
NBP[1]147*	0.4314	0.0011	0.8304	0.0035	0.0494	0.0024
NBP[1]171*	0.8224	0.0021	1.7306	0.0073	0.1013	0.0049
NBP[1]195*	1.0758	0.0027	2.4160	0.0102	0.1398	0.0067
NBP[1]222*	0.8003	0.0020	1.9331	0.0081	0.1105	0.0053
NBP[1]248*	0.6657	0.0017	1.7287	0.0073	0.0976	0.0047
NBP[1]273*	0.5358	0.0014	1.4881	0.0063	0.0831	0.0040
NBP[1]299*	0.4185	0.0011	1.2393	0.0052	0.0684	0.0033
NBP[1]325*	0.3029	0.0008	0.9528	0.0040	0.0521	0.0025
NBP[1]351*	0.2456	0.0006	0.8214	0.0035	0.0445	0.0021
NBP[1]377*	0.2247	0.0006	0.8014	0.0034	0.0429	0.0021
NBP[1]402*	0.2061	0.0005	0.7838	0.0033	0.0416	0.0020
NBP[1]428*	0.1961	0.0005	0.7956	0.0033	0.0418	0.0020
NBP[1]454*	0.1956	0.0005	0.8480	0.0036	0.0441	0.0021
NBP[1]480*	0.1982	0.0005	0.9182	0.0039	0.0473	0.0023
NBP[1]505*	0.1920	0.0005	0.9484	0.0040	0.0484	0.0023
NBP[1]531*	0.1852	0.0005	0.9740	0.0041	0.0492	0.0024
NBP[1]557*	0.1784	0.0005	0.9978	0.0042	0.0500	0.0024
NBP[1]582*	0.1706	0.0004	1.0132	0.0043	0.0503	0.0024
NBP[1]608*	0.1643	0.0004	1.0351	0.0044	0.0510	0.0025
NBP[1]634*	0.1611	0.0004	1.0753	0.0045	0.0526	0.0025
NBP[1]659*	0.1586	0.0004	1.1194	0.0047	0.0543	0.0026
NBP[1]685*	0.1641	0.0004	1.2227	0.0051	0.0588	0.0028
NBP[1]711*	0.1715	0.0004	1.3445	0.0057	0.0642	0.0031
NBP[1]736*	0.1697	0.0004	1.3915	0.0059	0.0659	0.0032
NBP[1]762*	0.1653	0.0004	1.4214	0.0060	0.0669	0.0032
NBP[1]788*	0.1585	0.0004	1.4424	0.0061	0.0674	0.0032
NBP[1]825*	0.2655	0.0007	2.5963	0.0109	0.1201	0.0058
NBP[1]873*	0.1830	0.0005	1.9404	0.0082	0.0887	0.0043
NBP[1]926*	0.1437	0.0004	1.6472	0.0069	0.0744	0.0036
NBP[1]978*	0.1474	0.0004	1.8524	0.0078	0.0825	0.0040
NBP[1]1021*	0.0728	0.0002	0.9655	0.0041	0.0426	0.0020
NBP[1]1075*	0.0449	0.0001	0.6310	0.0027	0.0276	0.0013
NBP[1]1123*	0.0417	0.0001	0.6267	0.0026	0.0271	0.0013
NBP[1]1173*	0.0300	0.0001	0.4772	0.0020	0.0205	0.0010
NBP[1]1250*	0.0393	0.0001	0.6767	0.0028	0.0287	0.0014

* Specified by user.

Material Stream: 7 (continued)

Fluid Package: Basis-1
Property Package: Peng-Robinson

COMPOSITION

Overall Phase (continued)

Vapour Fraction 0.6935

COMPONENTS	MOLAR FLOW (kgmole/h)	MOLE FRACTION	MASS FLOW (tonne/d)	MASS FRACTION	LIQUID VOLUME FLOW (m3/h)	LIQUID VOLUME FRACTION
NBP[1]1339*	0.0364	0.0001	0.6999	0.0029	0.0291	0.0014
NBP[1]1432*	0.0257	0.0001	0.5397	0.0023	0.0221	0.0011
NBP[1]1528*	0.0180	0.0000	0.4082	0.0017	0.0165	0.0008
NBP[1]1637*	0.0127	0.0000	0.3047	0.0013	0.0122	0.0006
NBP[1]1732*	0.0101	0.0000	0.2565	0.0011	0.0101	0.0005
NBP[1]1819*	0.0097	0.0000	0.2590	0.0011	0.0101	0.0005
NBP[1]1913*	0.0112	0.0000	0.3148	0.0013	0.0121	0.0006
Total	392.1623	1.0000	237.5489	1.0000	20.8162	1.0000

Vapour Phase

Phase Fraction 0.6935

COMPONENTS	MOLAR FLOW (kgmole/h)	MOLE FRACTION	MASS FLOW (tonne/d)	MASS FRACTION	LIQUID VOLUME FLOW (m3/h)	LIQUID VOLUME FRACTION
Methane	205.0323	0.7539	78.9435	0.5519	10.9866	0.6750
Ethane	27.9108	0.1026	20.1426	0.1408	2.3596	0.1450
Propane	14.1614	0.0521	14.9874	0.1048	1.2325	0.0757
i-Butane	1.7596	0.0065	2.4546	0.0172	0.1820	0.0112
n-Butane	3.3123	0.0122	4.6206	0.0323	0.3301	0.0203
i-Pentane	0.6164	0.0023	1.0674	0.0075	0.0713	0.0044
n-Pentane	0.6582	0.0024	1.1397	0.0080	0.0754	0.0046
n-Hexane	0.7101	0.0026	1.4686	0.0103	0.0923	0.0057
Nitrogen	5.5716	0.0205	3.7459	0.0262	0.1936	0.0119
CO2	9.1786	0.0337	9.6947	0.0678	0.4894	0.0301
H2S	0.0005	0.0000	0.0004	0.0000	0.0000	0.0000
H2O	1.2287	0.0045	0.5313	0.0037	0.0222	0.0014
NBP[1]95*	0.1982	0.0007	0.3231	0.0023	0.0198	0.0012
NBP[1]121*	0.2062	0.0008	0.3605	0.0025	0.0218	0.0013
NBP[1]147*	0.2249	0.0008	0.4328	0.0030	0.0257	0.0016
NBP[1]171*	0.3567	0.0013	0.7507	0.0052	0.0439	0.0027
NBP[1]195*	0.3746	0.0014	0.8413	0.0059	0.0487	0.0030
NBP[1]222*	0.2050	0.0008	0.4951	0.0035	0.0283	0.0017
NBP[1]248*	0.1220	0.0004	0.3168	0.0022	0.0179	0.0011
NBP[1]273*	0.0677	0.0002	0.1881	0.0013	0.0105	0.0006
NBP[1]299*	0.0353	0.0001	0.1044	0.0007	0.0058	0.0004
NBP[1]325*	0.0163	0.0001	0.0512	0.0004	0.0028	0.0002
NBP[1]351*	0.0082	0.0000	0.0273	0.0002	0.0015	0.0001
NBP[1]377*	0.0045	0.0000	0.0159	0.0001	0.0009	0.0001
NBP[1]402*	0.0024	0.0000	0.0092	0.0001	0.0005	0.0000
NBP[1]428*	0.0013	0.0000	0.0053	0.0000	0.0003	0.0000
NBP[1]454*	0.0007	0.0000	0.0032	0.0000	0.0002	0.0000
NBP[1]480*	0.0004	0.0000	0.0019	0.0000	0.0001	0.0000
NBP[1]505*	0.0002	0.0000	0.0011	0.0000	0.0001	0.0000
NBP[1]531*	0.0001	0.0000	0.0006	0.0000	0.0000	0.0000
NBP[1]557*	0.0001	0.0000	0.0003	0.0000	0.0000	0.0000
NBP[1]582*	0.0000	0.0000	0.0002	0.0000	0.0000	0.0000
NBP[1]608*	0.0000	0.0000	0.0001	0.0000	0.0000	0.0000
NBP[1]634*	0.0000	0.0000	0.0000	0.0000	0.0000	0.0000
NBP[1]659*	0.0000	0.0000	0.0000	0.0000	0.0000	0.0000
NBP[1]685*	0.0000	0.0000	0.0000	0.0000	0.0000	0.0000
NBP[1]711*	0.0000	0.0000	0.0000	0.0000	0.0000	0.0000
NBP[1]736*	0.0000	0.0000	0.0000	0.0000	0.0000	0.0000
NBP[1]762*	0.0000	0.0000	0.0000	0.0000	0.0000	0.0000
NBP[1]788*	0.0000	0.0000	0.0000	0.0000	0.0000	0.0000
NBP[1]825*	0.0000	0.0000	0.0000	0.0000	0.0000	0.0000
NBP[1]873*	0.0000	0.0000	0.0000	0.0000	0.0000	0.0000

* Specified by user.

Material Stream: 7 (continued)

Fluid Package: Basis-1
Property Package: Peng-Robinson

COMPOSITION

Vapour Phase (continued)

Phase Fraction 0.6935

COMPONENTS	MOLAR FLOW (kgmole/h)	MOLE FRACTION	MASS FLOW (tonne/d)	MASS FRACTION	LIQUID VOLUME FLOW (m3/h)	LIQUID VOLUME FRACTION
NBP[1]926*	0.0000	0.0000	0.0000	0.0000	0.0000	0.0000
NBP[1]978*	0.0000	0.0000	0.0000	0.0000	0.0000	0.0000
NBP[1]1021*	0.0000	0.0000	0.0000	0.0000	0.0000	0.0000
NBP[1]1075*	0.0000	0.0000	0.0000	0.0000	0.0000	0.0000
NBP[1]1123*	0.0000	0.0000	0.0000	0.0000	0.0000	0.0000
NBP[1]1173*	0.0000	0.0000	0.0000	0.0000	0.0000	0.0000
NBP[1]1250*	0.0000	0.0000	0.0000	0.0000	0.0000	0.0000
NBP[1]1339*	0.0000	0.0000	0.0000	0.0000	0.0000	0.0000
NBP[1]1432*	0.0000	0.0000	0.0000	0.0000	0.0000	0.0000
NBP[1]1528*	0.0000	0.0000	0.0000	0.0000	0.0000	0.0000
NBP[1]1637*	0.0000	0.0000	0.0000	0.0000	0.0000	0.0000
NBP[1]1732*	0.0000	0.0000	0.0000	0.0000	0.0000	0.0000
NBP[1]1819*	0.0002	0.0000	0.0044	0.0000	0.0002	0.0000
NBP[1]1913*	0.0112	0.0000	0.3148	0.0022	0.0121	0.0007
Total	271.9767	1.0000	143.0448	1.0000	16.2760	1.0000

Liquid Phase

Phase Fraction 3.750e-002

COMPONENTS	MOLAR FLOW (kgmole/h)	MOLE FRACTION	MASS FLOW (tonne/d)	MASS FRACTION	LIQUID VOLUME FLOW (m3/h)	LIQUID VOLUME FRACTION
Methane	2.0116	0.1368	0.7745	0.0158	0.1078	0.0409
Ethane	0.8899	0.0605	0.6422	0.0131	0.0752	0.0286
Propane	1.1063	0.0752	1.1709	0.0240	0.0963	0.0365
i-Butane	0.2691	0.0183	0.3754	0.0077	0.0278	0.0106
n-Butane	0.6390	0.0434	0.8914	0.0182	0.0637	0.0242
i-Pentane	0.2331	0.0158	0.4036	0.0083	0.0270	0.0102
n-Pentane	0.3021	0.0205	0.5230	0.0107	0.0346	0.0131
n-Hexane	0.7597	0.0517	1.5714	0.0321	0.0988	0.0375
Nitrogen	0.0263	0.0018	0.0177	0.0004	0.0009	0.0003
CO2	0.2011	0.0137	0.2124	0.0043	0.0107	0.0041
H2S	0.0000	0.0000	0.0000	0.0000	0.0000	0.0000
H2O	0.0286	0.0019	0.0123	0.0003	0.0005	0.0002
NBP[1]95*	0.0901	0.0061	0.1468	0.0030	0.0090	0.0034
NBP[1]121*	0.1319	0.0090	0.2307	0.0047	0.0140	0.0053
NBP[1]147*	0.2066	0.0140	0.3976	0.0081	0.0236	0.0090
NBP[1]171*	0.4657	0.0317	0.9799	0.0200	0.0574	0.0218
NBP[1]195*	0.7012	0.0477	1.5747	0.0322	0.0911	0.0346
NBP[1]222*	0.5953	0.0405	1.4379	0.0294	0.0822	0.0312
NBP[1]248*	0.5437	0.0370	1.4120	0.0289	0.0797	0.0303
NBP[1]273*	0.4681	0.0318	1.3000	0.0266	0.0726	0.0275
NBP[1]299*	0.3832	0.0261	1.1349	0.0232	0.0627	0.0238
NBP[1]325*	0.2866	0.0195	0.9015	0.0184	0.0493	0.0187
NBP[1]351*	0.2375	0.0161	0.7941	0.0162	0.0430	0.0163
NBP[1]377*	0.2203	0.0150	0.7855	0.0161	0.0421	0.0160
NBP[1]402*	0.2037	0.0139	0.7747	0.0158	0.0411	0.0156
NBP[1]428*	0.1948	0.0132	0.7902	0.0162	0.0415	0.0158
NBP[1]454*	0.1948	0.0132	0.8448	0.0173	0.0439	0.0167
NBP[1]480*	0.1978	0.0134	0.9163	0.0187	0.0472	0.0179
NBP[1]505*	0.1918	0.0130	0.9473	0.0194	0.0483	0.0183
NBP[1]531*	0.1851	0.0126	0.9734	0.0199	0.0492	0.0187
NBP[1]557*	0.1784	0.0121	0.9975	0.0204	0.0500	0.0190
NBP[1]582*	0.1706	0.0116	1.0130	0.0207	0.0503	0.0191
NBP[1]608*	0.1643	0.0112	1.0350	0.0212	0.0510	0.0194
NBP[1]634*	0.1611	0.0110	1.0753	0.0220	0.0526	0.0199
NBP[1]659*	0.1586	0.0108	1.1194	0.0229	0.0543	0.0206

* Specified by user.

Material Stream: 7 (continued)

Fluid Package: Basis-1
Property Package: Peng-Robinson

COMPOSITION

Liquid Phase (continued)

Phase Fraction 3.750e-002

COMPONENTS	MOLAR FLOW (kgmole/h)	MOLE FRACTION	MASS FLOW (tonne/d)	MASS FRACTION	LIQUID VOLUME FLOW (m3/h)	LIQUID VOLUME FRACTION
NBP[1]685*	0.1641	0.0112	1.2227	0.0250	0.0588	0.0223
NBP[1]711*	0.1715	0.0117	1.3445	0.0275	0.0642	0.0244
NBP[1]736*	0.1697	0.0115	1.3915	0.0285	0.0659	0.0250
NBP[1]762*	0.1653	0.0112	1.4214	0.0291	0.0669	0.0254
NBP[1]788*	0.1585	0.0108	1.4424	0.0295	0.0674	0.0256
NBP[1]825*	0.2655	0.0180	2.5963	0.0531	0.1201	0.0456
NBP[1]873*	0.1830	0.0124	1.9404	0.0397	0.0887	0.0337
NBP[1]926*	0.1437	0.0098	1.6472	0.0337	0.0744	0.0283
NBP[1]978*	0.1474	0.0100	1.8524	0.0379	0.0825	0.0313
NBP[1]1021*	0.0728	0.0050	0.9655	0.0198	0.0426	0.0162
NBP[1]1075*	0.0449	0.0031	0.6310	0.0129	0.0276	0.0105
NBP[1]1123*	0.0417	0.0028	0.6267	0.0128	0.0271	0.0103
NBP[1]1173*	0.0300	0.0020	0.4772	0.0098	0.0205	0.0078
NBP[1]1250*	0.0393	0.0027	0.6767	0.0138	0.0287	0.0109
NBP[1]1339*	0.0364	0.0025	0.6999	0.0143	0.0291	0.0111
NBP[1]1432*	0.0257	0.0017	0.5397	0.0110	0.0221	0.0084
NBP[1]1528*	0.0180	0.0012	0.4082	0.0084	0.0165	0.0063
NBP[1]1637*	0.0127	0.0009	0.3047	0.0062	0.0122	0.0046
NBP[1]1732*	0.0101	0.0007	0.2565	0.0052	0.0101	0.0038
NBP[1]1819*	0.0096	0.0007	0.2546	0.0052	0.0099	0.0038
NBP[1]1913*	0.0000	0.0000	0.0000	0.0000	0.0000	0.0000
Total	14.7076	1.0000	48.8770	1.0000	2.6349	1.0000

Aqueous Phase

Phase Fraction 0.2690

COMPONENTS	MOLAR FLOW (kgmole/h)	MOLE FRACTION	MASS FLOW (tonne/d)	MASS FRACTION	LIQUID VOLUME FLOW (m3/h)	LIQUID VOLUME FRACTION
Methane	0.0001	0.0000	0.0000	0.0000	0.0000	0.0000
Ethane	0.0000	0.0000	0.0000	0.0000	0.0000	0.0000
Propane	0.0000	0.0000	0.0000	0.0000	0.0000	0.0000
i-Butane	0.0000	0.0000	0.0000	0.0000	0.0000	0.0000
n-Butane	0.0000	0.0000	0.0000	0.0000	0.0000	0.0000
i-Pentane	0.0000	0.0000	0.0000	0.0000	0.0000	0.0000
n-Pentane	0.0000	0.0000	0.0000	0.0000	0.0000	0.0000
n-Hexane	0.0000	0.0000	0.0000	0.0000	0.0000	0.0000
Nitrogen	0.0009	0.0000	0.0006	0.0000	0.0000	0.0000
CO2	0.0354	0.0003	0.0374	0.0008	0.0019	0.0010
H2S	0.0000	0.0000	0.0000	0.0000	0.0000	0.0000
H2O	105.4416	0.9997	45.5890	0.9992	1.9034	0.9990
NBP[1]95*	0.0000	0.0000	0.0000	0.0000	0.0000	0.0000
NBP[1]121*	0.0000	0.0000	0.0000	0.0000	0.0000	0.0000
NBP[1]147*	0.0000	0.0000	0.0000	0.0000	0.0000	0.0000
NBP[1]171*	0.0000	0.0000	0.0000	0.0000	0.0000	0.0000
NBP[1]195*	0.0000	0.0000	0.0000	0.0000	0.0000	0.0000
NBP[1]222*	0.0000	0.0000	0.0000	0.0000	0.0000	0.0000
NBP[1]248*	0.0000	0.0000	0.0000	0.0000	0.0000	0.0000
NBP[1]273*	0.0000	0.0000	0.0000	0.0000	0.0000	0.0000
NBP[1]299*	0.0000	0.0000	0.0000	0.0000	0.0000	0.0000
NBP[1]325*	0.0000	0.0000	0.0000	0.0000	0.0000	0.0000
NBP[1]351*	0.0000	0.0000	0.0000	0.0000	0.0000	0.0000
NBP[1]377*	0.0000	0.0000	0.0000	0.0000	0.0000	0.0000
NBP[1]402*	0.0000	0.0000	0.0000	0.0000	0.0000	0.0000
NBP[1]428*	0.0000	0.0000	0.0000	0.0000	0.0000	0.0000
NBP[1]454*	0.0000	0.0000	0.0000	0.0000	0.0000	0.0000
NBP[1]480*	0.0000	0.0000	0.0000	0.0000	0.0000	0.0000

* Specified by user.

Material Stream: 7 (continued)

Fluid Package: Basis-1
Property Package: Peng-Robinson

COMPOSITION

Aqueous Phase (continued)

Phase Fraction 0.2690

COMPONENTS	MOLAR FLOW (kgmole/h)	MOLE FRACTION	MASS FLOW (tonne/d)	MASS FRACTION	LIQUID VOLUME FLOW (m3/h)	LIQUID VOLUME FRACTION
NBP[1]505*	0.0000	0.0000	0.0000	0.0000	0.0000	0.0000
NBP[1]531*	0.0000	0.0000	0.0000	0.0000	0.0000	0.0000
NBP[1]557*	0.0000	0.0000	0.0000	0.0000	0.0000	0.0000
NBP[1]582*	0.0000	0.0000	0.0000	0.0000	0.0000	0.0000
NBP[1]608*	0.0000	0.0000	0.0000	0.0000	0.0000	0.0000
NBP[1]634*	0.0000	0.0000	0.0000	0.0000	0.0000	0.0000
NBP[1]659*	0.0000	0.0000	0.0000	0.0000	0.0000	0.0000
NBP[1]685*	0.0000	0.0000	0.0000	0.0000	0.0000	0.0000
NBP[1]711*	0.0000	0.0000	0.0000	0.0000	0.0000	0.0000
NBP[1]736*	0.0000	0.0000	0.0000	0.0000	0.0000	0.0000
NBP[1]762*	0.0000	0.0000	0.0000	0.0000	0.0000	0.0000
NBP[1]788*	0.0000	0.0000	0.0000	0.0000	0.0000	0.0000
NBP[1]825*	0.0000	0.0000	0.0000	0.0000	0.0000	0.0000
NBP[1]873*	0.0000	0.0000	0.0000	0.0000	0.0000	0.0000
NBP[1]926*	0.0000	0.0000	0.0000	0.0000	0.0000	0.0000
NBP[1]978*	0.0000	0.0000	0.0000	0.0000	0.0000	0.0000
NBP[1]1021*	0.0000	0.0000	0.0000	0.0000	0.0000	0.0000
NBP[1]1075*	0.0000	0.0000	0.0000	0.0000	0.0000	0.0000
NBP[1]1123*	0.0000	0.0000	0.0000	0.0000	0.0000	0.0000
NBP[1]1173*	0.0000	0.0000	0.0000	0.0000	0.0000	0.0000
NBP[1]1250*	0.0000	0.0000	0.0000	0.0000	0.0000	0.0000
NBP[1]1339*	0.0000	0.0000	0.0000	0.0000	0.0000	0.0000
NBP[1]1432*	0.0000	0.0000	0.0000	0.0000	0.0000	0.0000
NBP[1]1528*	0.0000	0.0000	0.0000	0.0000	0.0000	0.0000
NBP[1]1637*	0.0000	0.0000	0.0000	0.0000	0.0000	0.0000
NBP[1]1732*	0.0000	0.0000	0.0000	0.0000	0.0000	0.0000
NBP[1]1819*	0.0000	0.0000	0.0000	0.0000	0.0000	0.0000
NBP[1]1913*	0.0000	0.0000	0.0000	0.0000	0.0000	0.0000
Total	105.4780	1.0000	45.6270	1.0000	1.9053	1.0000

Material Stream: 8

Fluid Package: Basis-1
Property Package: Peng-Robinson

CONDITIONS

		Overall	Vapour Phase	Liquid Phase	Aqueous Phase
Vapour / Phase Fraction		0.0000	0.0000	1.0000	0.0000
Temperature:	(F)	134.8	134.8	134.8	134.8
Pressure:	(psig)	645.0	645.0	645.0	645.0
Molar Flow	(MMSCFD)	0.2947	0.0000	0.2947	0.0000
Mass Flow	(tonne/d)	48.86	0.0000	48.86	0.0000
Std Ideal Liq Vol Flow	(barrel/day)	397.5	0.0000	397.5	0.0000
Molar Enthalpy	(kJ/kgmole)	-3.053e+005	-8.943e+004	-3.053e+005	-2.837e+005
Molar Entropy	(kJ/kgmole-C)	268.8	159.9	268.8	61.63
Heat Flow	(MMBtu/hr)	-4.247	0.0000	-4.247	0.0000
Liq Vol Flow @Std Cond	(barrel/day)	384.6 *	0.0000	384.6	0.0000

PROPERTIES

		Overall	Vapour Phase	Liquid Phase	Aqueous Phase
Molecular Weight		138.7	21.91	138.7	18.02
Molar Density	(kgmole/m3)	5.479	1.869	5.479	54.61
Mass Density	(kg/m3)	760.0	40.96	760.0	984.4
Act. Volume Flow	(barrel/day)	404.4	0.0000	404.4	0.0000
Mass Enthalpy	(kJ/kg)	-2201	-4081	-2201	-1.574e+004
Mass Entropy	(kJ/kg-C)	1.938	7.296	1.938	3.419

* Specified by user.

Material Stream: 8 (continued)

Fluid Package: Basis-1
Property Package: Peng-Robinson

PROPERTIES

	Overall	Vapour Phase	Liquid Phase	Aqueous Phase
Heat Capacity (kJ/kgmole-C)	293.3	50.96	293.3	77.83
Mass Heat Capacity (kJ/kg-C)	2.114	2.326	2.114	4.318
LHV Molar Basis (Std) (Btu/SCF)	---	---	---	9.264e-004
LHV Mass Basis (Std) (kJ/kg)	---	---	---	4.536e-002
Phase Fraction [Vol. Basis]	---	---	1.000	---
Phase Fraction [Mass Basis]	0.0000	0.0000	1.000	0.0000
Partial Pressure of CO2 (psig)	-14.70	---	---	---
Cost Based on Flow (Cost/s)	0.0000	0.0000	0.0000	0.0000
Act. Gas Flow (ACT_m3/h)	---	---	---	---
Avg. Liq. Density (kgmole/m3)	5.574	16.71	5.574	55.36
Specific Heat (kJ/kgmole-C)	293.3	50.96	293.3	77.83
Std. Gas Flow (STD_m3/h)	347.0	0.0000	347.0	0.0000
Std. Ideal Liq. Mass Density (kg/m3)	773.2	366.2	773.2	997.8
Act. Liq. Flow (barrel/day)	404.4	---	404.4	0.0000
Z Factor	---	0.8861	0.3023	3.033e-002
Watson K	11.91	17.11	11.91	8.500
User Property	---	---	---	---
Partial Pressure of H2S (psig)	-14.70	---	---	---
Cp/(Cp - R)	1.029	1.195	1.029	1.120
Cp/Cv	1.209	1.388	1.209	1.161
Heat of Vap. (kJ/kgmole)	2.546e+005	---	---	---
Kinematic Viscosity (cSt)	1.205	0.3258	1.205	0.4919
Liq. Mass Density (Std. Cond) (kg/m3)	799.1	0.9307	799.1	1015
Liq. Vol. Flow (Std. Cond) (barrel/day)	384.6	0.0000	384.6	0.0000
Liquid Fraction	1.000	0.0000	1.000	1.000
Molar Volume (m3/kgmole)	0.1825	0.5350	0.1825	1.831e-002
Mass Heat of Vap. (kJ/kg)	1835	---	---	---
Phase Fraction [Molar Basis]	0.0000	0.0000	1.0000	0.0000
Surface Tension (dyne/cm)	14.67	---	14.67	66.45
Thermal Conductivity (W/m-K)	9.689e-002	3.754e-002	9.689e-002	0.6507
Viscosity (cP)	0.9160	1.335e-002	0.9160	0.4842
Cv (Semi-Ideal) (kJ/kgmole-C)	284.9	42.65	284.9	69.52
Mass Cv (Semi-Ideal) (kJ/kg-C)	2.054	1.946	2.054	3.857
Cv (kJ/kgmole-C)	242.7	36.71	242.7	67.01
Mass Cv (kJ/kg-C)	1.749	1.675	1.749	3.718
Cv (Ent. Method) (kJ/kgmole-C)	---	-4152	---	65.75
Mass Cv (Ent. Method) (kJ/kg-C)	---	-189.5	---	3.648
Cp/Cv (Ent. Method)	---	-1.228e-002	---	1.184
Reid VP at 37.8 C (psig)	97.93	---	97.93	---
True VP at 37.8 C (psig)	567.4	5197	567.4	169.7
Liq. Vol. Flow - Sum(Std. Cond) (barrel/day)	384.6	0.0000	384.6	0.0000
HHV Molar Basis (Std) (Btu/SCF)	---	---	---	46.45
HHV Mass Basis (Std) (kJ/kg)	---	---	---	2275
CO2 Loading	---	---	---	---
CO2 App ML Con (kgmole/m3)	7.452e-002	---	7.452e-002	---
CO2 App WT Con (kgmol/kg)	9.805e-005	---	9.805e-005	---
Phase Fraction [Act. Vol. Basis]	0.0000	0.0000	1.000	0.0000
Mass Exergy (kJ/kg)	24.90	---	---	---
Viscosity Index	5.703	---	---	---
Ideal Gas Cp/Cv	1.036	1.231	1.036	1.327
Ideal Gas Cp (kJ/kgmole-C)	236.5	44.30	236.5	33.77
Mass Ideal Gas Cp (kJ/kg-C)	1.705	2.022	1.705	1.874
Bubble Point Pressure (psig)	645.0	---	---	---

* Specified by user.

Material Stream: 8 (continued)

Fluid Package: Basis-1
Property Package: Peng-Robinson

COMPOSITION

Overall Phase

Vapour Fraction 0.0000

COMPONENTS	MOLAR FLOW (kgmole/h)	MOLE FRACTION	MASS FLOW (tonne/d)	MASS FRACTION	LIQUID VOLUME FLOW (m3/h)	LIQUID VOLUME FRACTION
Methane	1.9941	0.1359	0.7678	0.0157	0.1069	0.0406
Ethane	0.8842	0.0602	0.6381	0.0131	0.0747	0.0284
Propane	1.1014	0.0750	1.1656	0.0239	0.0959	0.0364
i-Butane	0.2683	0.0183	0.3743	0.0077	0.0277	0.0105
n-Butane	0.6374	0.0434	0.8891	0.0182	0.0635	0.0241
i-Pentane	0.2328	0.0159	0.4031	0.0082	0.0269	0.0102
n-Pentane	0.3018	0.0206	0.5226	0.0107	0.0346	0.0131
n-Hexane	0.7599	0.0518	1.5717	0.0322	0.0988	0.0375
Nitrogen	0.0261	0.0018	0.0175	0.0004	0.0009	0.0003
CO2	0.1996	0.0136	0.2108	0.0043	0.0106	0.0040
H2S	0.0000	0.0000	0.0000	0.0000	0.0000	0.0000
H2O	0.0284	0.0019	0.0123	0.0003	0.0005	0.0002
NBP[1]95*	0.0900	0.0061	0.1467	0.0030	0.0090	0.0034
NBP[1]121*	0.1319	0.0090	0.2306	0.0047	0.0139	0.0053
NBP[1]147*	0.2066	0.0141	0.3976	0.0081	0.0236	0.0090
NBP[1]171*	0.4658	0.0317	0.9802	0.0201	0.0574	0.0218
NBP[1]195*	0.7015	0.0478	1.5755	0.0322	0.0912	0.0346
NBP[1]222*	0.5957	0.0406	1.4388	0.0294	0.0822	0.0312
NBP[1]248*	0.5440	0.0371	1.4128	0.0289	0.0798	0.0303
NBP[1]273*	0.4683	0.0319	1.3007	0.0266	0.0726	0.0276
NBP[1]299*	0.3834	0.0261	1.1353	0.0232	0.0627	0.0238
NBP[1]325*	0.2867	0.0195	0.9018	0.0185	0.0493	0.0187
NBP[1]351*	0.2375	0.0162	0.7943	0.0163	0.0430	0.0163
NBP[1]377*	0.2203	0.0150	0.7856	0.0161	0.0421	0.0160
NBP[1]402*	0.2037	0.0139	0.7748	0.0159	0.0411	0.0156
NBP[1]428*	0.1948	0.0133	0.7903	0.0162	0.0415	0.0158
NBP[1]454*	0.1948	0.0133	0.8449	0.0173	0.0439	0.0167
NBP[1]480*	0.1978	0.0135	0.9163	0.0188	0.0472	0.0179
NBP[1]505*	0.1918	0.0131	0.9473	0.0194	0.0483	0.0184
NBP[1]531*	0.1851	0.0126	0.9735	0.0199	0.0492	0.0187
NBP[1]557*	0.1784	0.0122	0.9975	0.0204	0.0500	0.0190
NBP[1]582*	0.1706	0.0116	1.0130	0.0207	0.0503	0.0191
NBP[1]608*	0.1643	0.0112	1.0350	0.0212	0.0510	0.0194
NBP[1]634*	0.1611	0.0110	1.0753	0.0220	0.0526	0.0200
NBP[1]659*	0.1586	0.0108	1.1194	0.0229	0.0543	0.0206
NBP[1]685*	0.1641	0.0112	1.2227	0.0250	0.0588	0.0223
NBP[1]711*	0.1715	0.0117	1.3445	0.0275	0.0642	0.0244
NBP[1]736*	0.1697	0.0116	1.3915	0.0285	0.0659	0.0250
NBP[1]762*	0.1653	0.0113	1.4214	0.0291	0.0669	0.0254
NBP[1]788*	0.1585	0.0108	1.4424	0.0295	0.0674	0.0256
NBP[1]825*	0.2655	0.0181	2.5963	0.0531	0.1201	0.0456
NBP[1]873*	0.1830	0.0125	1.9404	0.0397	0.0887	0.0337
NBP[1]926*	0.1437	0.0098	1.6472	0.0337	0.0744	0.0283
NBP[1]978*	0.1474	0.0100	1.8524	0.0379	0.0825	0.0313
NBP[1]1021*	0.0728	0.0050	0.9655	0.0198	0.0426	0.0162
NBP[1]1075*	0.0449	0.0031	0.6310	0.0129	0.0276	0.0105
NBP[1]1123*	0.0417	0.0028	0.6267	0.0128	0.0271	0.0103
NBP[1]1173*	0.0300	0.0020	0.4772	0.0098	0.0205	0.0078
NBP[1]1250*	0.0393	0.0027	0.6767	0.0138	0.0287	0.0109
NBP[1]1339*	0.0364	0.0025	0.6999	0.0143	0.0291	0.0111
NBP[1]1432*	0.0257	0.0017	0.5397	0.0110	0.0221	0.0084
NBP[1]1528*	0.0180	0.0012	0.4082	0.0084	0.0165	0.0063
NBP[1]1637*	0.0127	0.0009	0.3047	0.0062	0.0122	0.0046
NBP[1]1732*	0.0101	0.0007	0.2565	0.0052	0.0101	0.0039

* Specified by user.

Material Stream: 8 (continued)

Fluid Package: Basis-1
Property Package: Peng-Robinson

COMPOSITION

Overall Phase (continued)

Vapour Fraction 0.0000

COMPONENTS	MOLAR FLOW (kgmole/h)	MOLE FRACTION	MASS FLOW (tonne/d)	MASS FRACTION	LIQUID VOLUME FLOW (m3/h)	LIQUID VOLUME FRACTION
NBP[1]1819*	0.0096	0.0007	0.2550	0.0052	0.0100	0.0038
NBP[1]1913*	0.0000	0.0000	0.0000	0.0000	0.0000	0.0000
Total	14.6765	1.0000	48.8600	1.0000	2.6329	1.0000

Vapour Phase

Phase Fraction 0.0000

COMPONENTS	MOLAR FLOW (kgmole/h)	MOLE FRACTION	MASS FLOW (tonne/d)	MASS FRACTION	LIQUID VOLUME FLOW (m3/h)	LIQUID VOLUME FRACTION
Methane	0.0000	0.7538	0.0000	0.5519	0.0000	0.6750
Ethane	0.0000	0.1026	0.0000	0.1408	0.0000	0.1450
Propane	0.0000	0.0521	0.0000	0.1048	0.0000	0.0757
i-Butane	0.0000	0.0065	0.0000	0.0172	0.0000	0.0112
n-Butane	0.0000	0.0122	0.0000	0.0323	0.0000	0.0203
i-Pentane	0.0000	0.0023	0.0000	0.0075	0.0000	0.0044
n-Pentane	0.0000	0.0024	0.0000	0.0080	0.0000	0.0046
n-Hexane	0.0000	0.0026	0.0000	0.0103	0.0000	0.0057
Nitrogen	0.0000	0.0205	0.0000	0.0262	0.0000	0.0119
CO2	0.0000	0.0337	0.0000	0.0678	0.0000	0.0301
H2S	0.0000	0.0000	0.0000	0.0000	0.0000	0.0000
H2O	0.0000	0.0045	0.0000	0.0037	0.0000	0.0014
NBP[1]95*	0.0000	0.0007	0.0000	0.0023	0.0000	0.0012
NBP[1]121*	0.0000	0.0008	0.0000	0.0025	0.0000	0.0013
NBP[1]147*	0.0000	0.0008	0.0000	0.0030	0.0000	0.0016
NBP[1]171*	0.0000	0.0013	0.0000	0.0052	0.0000	0.0027
NBP[1]195*	0.0000	0.0014	0.0000	0.0059	0.0000	0.0030
NBP[1]222*	0.0000	0.0008	0.0000	0.0035	0.0000	0.0017
NBP[1]248*	0.0000	0.0004	0.0000	0.0022	0.0000	0.0011
NBP[1]273*	0.0000	0.0002	0.0000	0.0013	0.0000	0.0006
NBP[1]299*	0.0000	0.0001	0.0000	0.0007	0.0000	0.0004
NBP[1]325*	0.0000	0.0001	0.0000	0.0004	0.0000	0.0002
NBP[1]351*	0.0000	0.0000	0.0000	0.0002	0.0000	0.0001
NBP[1]377*	0.0000	0.0000	0.0000	0.0001	0.0000	0.0001
NBP[1]402*	0.0000	0.0000	0.0000	0.0001	0.0000	0.0000
NBP[1]428*	0.0000	0.0000	0.0000	0.0000	0.0000	0.0000
NBP[1]454*	0.0000	0.0000	0.0000	0.0000	0.0000	0.0000
NBP[1]480*	0.0000	0.0000	0.0000	0.0000	0.0000	0.0000
NBP[1]505*	0.0000	0.0000	0.0000	0.0000	0.0000	0.0000
NBP[1]531*	0.0000	0.0000	0.0000	0.0000	0.0000	0.0000
NBP[1]557*	0.0000	0.0000	0.0000	0.0000	0.0000	0.0000
NBP[1]582*	0.0000	0.0000	0.0000	0.0000	0.0000	0.0000
NBP[1]608*	0.0000	0.0000	0.0000	0.0000	0.0000	0.0000
NBP[1]634*	0.0000	0.0000	0.0000	0.0000	0.0000	0.0000
NBP[1]659*	0.0000	0.0000	0.0000	0.0000	0.0000	0.0000
NBP[1]685*	0.0000	0.0000	0.0000	0.0000	0.0000	0.0000
NBP[1]711*	0.0000	0.0000	0.0000	0.0000	0.0000	0.0000
NBP[1]736*	0.0000	0.0000	0.0000	0.0000	0.0000	0.0000
NBP[1]762*	0.0000	0.0000	0.0000	0.0000	0.0000	0.0000
NBP[1]788*	0.0000	0.0000	0.0000	0.0000	0.0000	0.0000
NBP[1]825*	0.0000	0.0000	0.0000	0.0000	0.0000	0.0000
NBP[1]873*	0.0000	0.0000	0.0000	0.0000	0.0000	0.0000
NBP[1]926*	0.0000	0.0000	0.0000	0.0000	0.0000	0.0000
NBP[1]978*	0.0000	0.0000	0.0000	0.0000	0.0000	0.0000
NBP[1]1021*	0.0000	0.0000	0.0000	0.0000	0.0000	0.0000
NBP[1]1075*	0.0000	0.0000	0.0000	0.0000	0.0000	0.0000
NBP[1]1123*	0.0000	0.0000	0.0000	0.0000	0.0000	0.0000

* Specified by user.

Material Stream: 8 (continued)

Fluid Package: Basis-1
Property Package: Peng-Robinson

COMPOSITION

Vapour Phase (continued)

Phase Fraction 0.0000

COMPONENTS	MOLAR FLOW (kgmole/h)	MOLE FRACTION	MASS FLOW (tonne/d)	MASS FRACTION	LIQUID VOLUME FLOW (m3/h)	LIQUID VOLUME FRACTION
NBP[1]1173*	0.0000	0.0000	0.0000	0.0000	0.0000	0.0000
NBP[1]1250*	0.0000	0.0000	0.0000	0.0000	0.0000	0.0000
NBP[1]1339*	0.0000	0.0000	0.0000	0.0000	0.0000	0.0000
NBP[1]1432*	0.0000	0.0000	0.0000	0.0000	0.0000	0.0000
NBP[1]1528*	0.0000	0.0000	0.0000	0.0000	0.0000	0.0000
NBP[1]1637*	0.0000	0.0000	0.0000	0.0000	0.0000	0.0000
NBP[1]1732*	0.0000	0.0000	0.0000	0.0000	0.0000	0.0000
NBP[1]1819*	0.0000	0.0000	0.0000	0.0000	0.0000	0.0000
NBP[1]1913*	0.0000	0.0000	0.0000	0.0022	0.0000	0.0007
Total	0.0000	1.0000	0.0000	1.0000	0.0000	1.0000

Liquid Phase

Phase Fraction 1.000

COMPONENTS	MOLAR FLOW (kgmole/h)	MOLE FRACTION	MASS FLOW (tonne/d)	MASS FRACTION	LIQUID VOLUME FLOW (m3/h)	LIQUID VOLUME FRACTION
Methane	1.9941	0.1359	0.7678	0.0157	0.1069	0.0406
Ethane	0.8842	0.0602	0.6381	0.0131	0.0747	0.0284
Propane	1.1014	0.0750	1.1656	0.0239	0.0959	0.0364
i-Butane	0.2683	0.0183	0.3743	0.0077	0.0277	0.0105
n-Butane	0.6374	0.0434	0.8891	0.0182	0.0635	0.0241
i-Pentane	0.2328	0.0159	0.4031	0.0082	0.0269	0.0102
n-Pentane	0.3018	0.0206	0.5226	0.0107	0.0346	0.0131
n-Hexane	0.7599	0.0518	1.5717	0.0322	0.0988	0.0375
Nitrogen	0.0261	0.0018	0.0175	0.0004	0.0009	0.0003
CO2	0.1996	0.0136	0.2108	0.0043	0.0106	0.0040
H2S	0.0000	0.0000	0.0000	0.0000	0.0000	0.0000
H2O	0.0284	0.0019	0.0123	0.0003	0.0005	0.0002
NBP[1]95*	0.0900	0.0061	0.1467	0.0030	0.0090	0.0034
NBP[1]121*	0.1319	0.0090	0.2306	0.0047	0.0139	0.0053
NBP[1]147*	0.2066	0.0141	0.3976	0.0081	0.0236	0.0090
NBP[1]171*	0.4658	0.0317	0.9802	0.0201	0.0574	0.0218
NBP[1]195*	0.7015	0.0478	1.5755	0.0322	0.0912	0.0346
NBP[1]222*	0.5957	0.0406	1.4388	0.0294	0.0822	0.0312
NBP[1]248*	0.5440	0.0371	1.4128	0.0289	0.0798	0.0303
NBP[1]273*	0.4683	0.0319	1.3007	0.0266	0.0726	0.0276
NBP[1]299*	0.3834	0.0261	1.1353	0.0232	0.0627	0.0238
NBP[1]325*	0.2867	0.0195	0.9018	0.0185	0.0493	0.0187
NBP[1]351*	0.2375	0.0162	0.7943	0.0163	0.0430	0.0163
NBP[1]377*	0.2203	0.0150	0.7856	0.0161	0.0421	0.0160
NBP[1]402*	0.2037	0.0139	0.7748	0.0159	0.0411	0.0156
NBP[1]428*	0.1948	0.0133	0.7903	0.0162	0.0415	0.0158
NBP[1]454*	0.1948	0.0133	0.8449	0.0173	0.0439	0.0167
NBP[1]480*	0.1978	0.0135	0.9163	0.0188	0.0472	0.0179
NBP[1]505*	0.1918	0.0131	0.9473	0.0194	0.0483	0.0184
NBP[1]531*	0.1851	0.0126	0.9735	0.0199	0.0492	0.0187
NBP[1]557*	0.1784	0.0122	0.9975	0.0204	0.0500	0.0190
NBP[1]582*	0.1706	0.0116	1.0130	0.0207	0.0503	0.0191
NBP[1]608*	0.1643	0.0112	1.0350	0.0212	0.0510	0.0194
NBP[1]634*	0.1611	0.0110	1.0753	0.0220	0.0526	0.0200
NBP[1]659*	0.1586	0.0108	1.1194	0.0229	0.0543	0.0206
NBP[1]685*	0.1641	0.0112	1.2227	0.0250	0.0588	0.0223
NBP[1]711*	0.1715	0.0117	1.3445	0.0275	0.0642	0.0244
NBP[1]736*	0.1697	0.0116	1.3915	0.0285	0.0659	0.0250
NBP[1]762*	0.1653	0.0113	1.4214	0.0291	0.0669	0.0254
NBP[1]788*	0.1585	0.0108	1.4424	0.0295	0.0674	0.0256

* Specified by user.

Material Stream: 8 (continued)

Fluid Package: Basis-1
Property Package: Peng-Robinson

COMPOSITION

Liquid Phase (continued)

Phase Fraction 1.000

COMPONENTS	MOLAR FLOW (kgmole/h)	MOLE FRACTION	MASS FLOW (tonne/d)	MASS FRACTION	LIQUID VOLUME FLOW (m3/h)	LIQUID VOLUME FRACTION
NBP[1]825*	0.2655	0.0181	2.5963	0.0531	0.1201	0.0456
NBP[1]873*	0.1830	0.0125	1.9404	0.0397	0.0887	0.0337
NBP[1]926*	0.1437	0.0098	1.6472	0.0337	0.0744	0.0283
NBP[1]978*	0.1474	0.0100	1.8524	0.0379	0.0825	0.0313
NBP[1]1021*	0.0728	0.0050	0.9655	0.0198	0.0426	0.0162
NBP[1]1075*	0.0449	0.0031	0.6310	0.0129	0.0276	0.0105
NBP[1]1123*	0.0417	0.0028	0.6267	0.0128	0.0271	0.0103
NBP[1]1173*	0.0300	0.0020	0.4772	0.0098	0.0205	0.0078
NBP[1]1250*	0.0393	0.0027	0.6767	0.0138	0.0287	0.0109
NBP[1]1339*	0.0364	0.0025	0.6999	0.0143	0.0291	0.0111
NBP[1]1432*	0.0257	0.0017	0.5397	0.0110	0.0221	0.0084
NBP[1]1528*	0.0180	0.0012	0.4082	0.0084	0.0165	0.0063
NBP[1]1637*	0.0127	0.0009	0.3047	0.0062	0.0122	0.0046
NBP[1]1732*	0.0101	0.0007	0.2565	0.0052	0.0101	0.0039
NBP[1]1819*	0.0096	0.0007	0.2550	0.0052	0.0100	0.0038
NBP[1]1913*	0.0000	0.0000	0.0000	0.0000	0.0000	0.0000
Total	14.6765	1.0000	48.8600	1.0000	2.6329	1.0000

Aqueous Phase

Phase Fraction 0.0000

COMPONENTS	MOLAR FLOW (kgmole/h)	MOLE FRACTION	MASS FLOW (tonne/d)	MASS FRACTION	LIQUID VOLUME FLOW (m3/h)	LIQUID VOLUME FRACTION
Methane	0.0000	0.0000	0.0000	0.0000	0.0000	0.0000
Ethane	0.0000	0.0000	0.0000	0.0000	0.0000	0.0000
Propane	0.0000	0.0000	0.0000	0.0000	0.0000	0.0000
i-Butane	0.0000	0.0000	0.0000	0.0000	0.0000	0.0000
n-Butane	0.0000	0.0000	0.0000	0.0000	0.0000	0.0000
i-Pentane	0.0000	0.0000	0.0000	0.0000	0.0000	0.0000
n-Pentane	0.0000	0.0000	0.0000	0.0000	0.0000	0.0000
n-Hexane	0.0000	0.0000	0.0000	0.0000	0.0000	0.0000
Nitrogen	0.0000	0.0000	0.0000	0.0000	0.0000	0.0000
CO2	0.0000	0.0003	0.0000	0.0008	0.0000	0.0010
H2S	0.0000	0.0000	0.0000	0.0000	0.0000	0.0000
H2O	0.0000	0.9997	0.0000	0.9992	0.0000	0.9990
NBP[1]95*	0.0000	0.0000	0.0000	0.0000	0.0000	0.0000
NBP[1]121*	0.0000	0.0000	0.0000	0.0000	0.0000	0.0000
NBP[1]147*	0.0000	0.0000	0.0000	0.0000	0.0000	0.0000
NBP[1]171*	0.0000	0.0000	0.0000	0.0000	0.0000	0.0000
NBP[1]195*	0.0000	0.0000	0.0000	0.0000	0.0000	0.0000
NBP[1]222*	0.0000	0.0000	0.0000	0.0000	0.0000	0.0000
NBP[1]248*	0.0000	0.0000	0.0000	0.0000	0.0000	0.0000
NBP[1]273*	0.0000	0.0000	0.0000	0.0000	0.0000	0.0000
NBP[1]299*	0.0000	0.0000	0.0000	0.0000	0.0000	0.0000
NBP[1]325*	0.0000	0.0000	0.0000	0.0000	0.0000	0.0000
NBP[1]351*	0.0000	0.0000	0.0000	0.0000	0.0000	0.0000
NBP[1]377*	0.0000	0.0000	0.0000	0.0000	0.0000	0.0000
NBP[1]402*	0.0000	0.0000	0.0000	0.0000	0.0000	0.0000
NBP[1]428*	0.0000	0.0000	0.0000	0.0000	0.0000	0.0000
NBP[1]454*	0.0000	0.0000	0.0000	0.0000	0.0000	0.0000
NBP[1]480*	0.0000	0.0000	0.0000	0.0000	0.0000	0.0000
NBP[1]505*	0.0000	0.0000	0.0000	0.0000	0.0000	0.0000
NBP[1]531*	0.0000	0.0000	0.0000	0.0000	0.0000	0.0000
NBP[1]557*	0.0000	0.0000	0.0000	0.0000	0.0000	0.0000
NBP[1]582*	0.0000	0.0000	0.0000	0.0000	0.0000	0.0000
NBP[1]608*	0.0000	0.0000	0.0000	0.0000	0.0000	0.0000

* Specified by user.

Material Stream: 8 (continued)

Fluid Package: Basis-1
Property Package: Peng-Robinson

COMPOSITION

Aqueous Phase (continued)

Phase Fraction 0.0000

COMPONENTS	MOLAR FLOW (kgmole/h)	MOLE FRACTION	MASS FLOW (tonne/d)	MASS FRACTION	LIQUID VOLUME FLOW (m3/h)	LIQUID VOLUME FRACTION
NBP[1]634*	0.0000	0.0000	0.0000	0.0000	0.0000	0.0000
NBP[1]659*	0.0000	0.0000	0.0000	0.0000	0.0000	0.0000
NBP[1]685*	0.0000	0.0000	0.0000	0.0000	0.0000	0.0000
NBP[1]711*	0.0000	0.0000	0.0000	0.0000	0.0000	0.0000
NBP[1]736*	0.0000	0.0000	0.0000	0.0000	0.0000	0.0000
NBP[1]762*	0.0000	0.0000	0.0000	0.0000	0.0000	0.0000
NBP[1]788*	0.0000	0.0000	0.0000	0.0000	0.0000	0.0000
NBP[1]825*	0.0000	0.0000	0.0000	0.0000	0.0000	0.0000
NBP[1]873*	0.0000	0.0000	0.0000	0.0000	0.0000	0.0000
NBP[1]926*	0.0000	0.0000	0.0000	0.0000	0.0000	0.0000
NBP[1]978*	0.0000	0.0000	0.0000	0.0000	0.0000	0.0000
NBP[1]1021*	0.0000	0.0000	0.0000	0.0000	0.0000	0.0000
NBP[1]1075*	0.0000	0.0000	0.0000	0.0000	0.0000	0.0000
NBP[1]1123*	0.0000	0.0000	0.0000	0.0000	0.0000	0.0000
NBP[1]1173*	0.0000	0.0000	0.0000	0.0000	0.0000	0.0000
NBP[1]1250*	0.0000	0.0000	0.0000	0.0000	0.0000	0.0000
NBP[1]1339*	0.0000	0.0000	0.0000	0.0000	0.0000	0.0000
NBP[1]1432*	0.0000	0.0000	0.0000	0.0000	0.0000	0.0000
NBP[1]1528*	0.0000	0.0000	0.0000	0.0000	0.0000	0.0000
NBP[1]1637*	0.0000	0.0000	0.0000	0.0000	0.0000	0.0000
NBP[1]1732*	0.0000	0.0000	0.0000	0.0000	0.0000	0.0000
NBP[1]1819*	0.0000	0.0000	0.0000	0.0000	0.0000	0.0000
NBP[1]1913*	0.0000	0.0000	0.0000	0.0000	0.0000	0.0000
Total	0.0000	1.0000	0.0000	1.0000	0.0000	1.0000

Material Stream: 9

Fluid Package: Basis-1
Property Package: Peng-Robinson

CONDITIONS

		Overall	Vapour Phase	Liquid Phase	Liquid Phase
Vapour / Phase Fraction		0.3311	0.3311	0.0099	0.6590
Temperature:	(F)	122.2	122.2	122.2	122.2
Pressure:	(psig)	20.00 *	20.00	20.00	20.00
Molar Flow	(MMSCFD)	0.2947	9.757e-002	2.923e-003	0.1942
Mass Flow	(tonne/d)	48.86	4.134	2.586	42.14
Std Ideal Liq Vol Flow	(barrel/day)	397.5	55.79	16.08	325.6
Molar Enthalpy	(kJ/kgmole)	-3.053e+005	-1.071e+005	-1.552e+006	-3.861e+005
Molar Entropy	(kJ/kgmole-C)	277.0	185.8	1690	301.6
Heat Flow	(MMBtu/hr)	-4.247	-0.4931	-0.2141	-3.540
Liq Vol Flow @Std Cond	(barrel/day)	384.6 *	64.33	16.32	323.1

PROPERTIES

		Overall	Vapour Phase	Liquid Phase	Liquid Phase
Molecular Weight		138.7	35.44	740.1	181.6
Molar Density	(kgmole/m3)	0.2626	9.072e-002	1.317	4.366
Mass Density	(kg/m3)	36.42	3.215	974.8	792.7
Act. Volume Flow	(barrel/day)	8437	8086	16.68	334.4
Mass Enthalpy	(kJ/kg)	-2201	-3021	-2097	-2127
Mass Entropy	(kJ/kg-C)	1.997	5.242	2.283	1.661
Heat Capacity	(kJ/kgmole-C)	281.0	65.73	1459	371.4
Mass Heat Capacity	(kJ/kg-C)	2.025	1.855	1.972	2.045
LHV Molar Basis (Std)	(Btu/SCF)	---	---	---	---
LHV Mass Basis (Std)	(kJ/kg)	---	---	---	---
Phase Fraction [Vol. Basis]		0.1404	0.1404	4.045e-002	0.8192

* Specified by user.

Material Stream: 9 (continued)

Fluid Package: Basis-1
Property Package: Peng-Robinson

PROPERTIES

	Overall	Vapour Phase	Liquid Phase	Liquid Phase
Phase Fraction [Mass Basis]	8.460e-002	8.460e-002	5.292e-002	0.8625
Partial Pressure of CO2 (psig)	-13.34	---	---	---
Cost Based on Flow (Cost/s)	0.0000	0.0000	0.0000	0.0000
Act. Gas Flow (ACT_m3/h)	53.57	53.57	---	---
Avg. Liq. Density (kgmole/m3)	5.574	13.15	1.367	4.484
Specific Heat (kJ/kgmole-C)	281.0	65.73	1459	371.4
Std. Gas Flow (STD_m3/h)	347.0	114.9	3.442	228.7
Std. Ideal Liq. Mass Density (kg/m3)	773.2	466.0	1012	814.1
Act. Liq. Flow (barrel/day)	351.1	---	16.68	334.4
Z Factor	---	0.9811	6.757e-002	2.039e-002
Watson K	11.91	15.07	11.97	11.86
User Property	---	---	---	---
Partial Pressure of H2S (psig)	-14.70	---	---	---
Cp/(Cp - R)	1.030	1.145	1.006	1.023
Cp/Cv	1.011	1.157	1.200	1.023
Heat of Vap. (kJ/kgmole)	3.140e+005	---	---	---
Kinematic Viscosity (cSt)	---	3.343	2213	1.861
Liq. Mass Density (Std. Cond) (kg/m3)	799.1	404.1	996.4	820.3
Liq. Vol. Flow (Std. Cond) (barrel/day)	384.6	64.33	16.32	323.1
Liquid Fraction	0.6689	0.0000	1.000	1.000
Molar Volume (m3/kgmole)	3.808	11.02	0.7592	0.2290
Mass Heat of Vap. (kJ/kg)	2264	---	---	---
Phase Fraction [Molar Basis]	0.3311	0.3311	0.0099	0.6590
Surface Tension (dyne/cm)	---	---	24.78	20.91
Thermal Conductivity (W/m-K)	---	2.553e-002	0.1352	0.1111
Viscosity (cP)	---	1.075e-002	2157	1.475
Cv (Semi-Ideal) (kJ/kgmole-C)	272.6	57.42	1451	---
Mass Cv (Semi-Ideal) (kJ/kg-C)	1.965	1.620	1.961	---
Cv (kJ/kgmole-C)	277.9	56.80	1216	---
Mass Cv (kJ/kg-C)	2.003	1.602	1.643	---
Cv (Ent. Method) (kJ/kgmole-C)	---	---	1322	---
Mass Cv (Ent. Method) (kJ/kg-C)	---	---	1.787	---
Cp/Cv (Ent. Method)	---	---	1.104	---
Reid VP at 37.8 C (psig)	97.93	771.1	---	-3.185
True VP at 37.8 C (psig)	567.4	1451	15.93	14.82
Liq. Vol. Flow - Sum(Std. Cond) (barrel/day)	80.66	64.33	16.32	0.0000
HHV Molar Basis (Std) (Btu/SCF)	---	---	---	---
HHV Mass Basis (Std) (kJ/kg)	---	---	---	---
CO2 Loading	---	---	---	---
CO2 App ML Con (kgmole/m3)	---	---	1.701e-003	4.489e-003
CO2 App WT Con (kgmol/kg)	---	---	1.745e-006	5.663e-006
Phase Fraction [Act. Vol. Basis]	0.9584	0.9584	1.977e-003	3.963e-002
Mass Exergy (kJ/kg)	7.244	---	---	---
Viscosity Index	6.231	---	---	---
Ideal Gas Cp/Cv	1.037	1.147	1.007	1.028
Ideal Gas Cp (kJ/kgmole-C)	232.1	65.03	1230	301.1
Mass Ideal Gas Cp (kJ/kg-C)	1.673	1.835	1.662	1.658
Bubble Point Pressure (psig)	617.0	---	---	---

COMPOSITION

Overall Phase

Vapour Fraction 0.3311

COMPONENTS	MOLAR FLOW (kgmole/h)	MOLE FRACTION	MASS FLOW (tonne/d)	MASS FRACTION	LIQUID VOLUME FLOW (m3/h)	LIQUID VOLUME FRACTION
Methane	1.9941	0.1359	0.7678	0.0157	0.1069	0.0406
Ethane	0.8842	0.0602	0.6381	0.0131	0.0747	0.0284
Propane	1.1014	0.0750	1.1656	0.0239	0.0959	0.0364

* Specified by user.

Material Stream: 9 (continued)

Fluid Package: Basis-1
Property Package: Peng-Robinson

COMPOSITION

Overall Phase (continued)

Vapour Fraction 0.3311

COMPONENTS	MOLAR FLOW (kgmole/h)	MOLE FRACTION	MASS FLOW (tonne/d)	MASS FRACTION	LIQUID VOLUME FLOW (m3/h)	LIQUID VOLUME FRACTION
i-Butane	0.2683	0.0183	0.3743	0.0077	0.0277	0.0105
n-Butane	0.6374	0.0434	0.8891	0.0182	0.0635	0.0241
i-Pentane	0.2328	0.0159	0.4031	0.0082	0.0269	0.0102
n-Pentane	0.3018	0.0206	0.5226	0.0107	0.0346	0.0131
n-Hexane	0.7599	0.0518	1.5717	0.0322	0.0988	0.0375
Nitrogen	0.0261	0.0018	0.0175	0.0004	0.0009	0.0003
CO2	0.1996	0.0136	0.2108	0.0043	0.0106	0.0040
H2S	0.0000	0.0000	0.0000	0.0000	0.0000	0.0000
H2O	0.0284	0.0019	0.0123	0.0003	0.0005	0.0002
NBP[1]95*	0.0900	0.0061	0.1467	0.0030	0.0090	0.0034
NBP[1]121*	0.1319	0.0090	0.2306	0.0047	0.0139	0.0053
NBP[1]147*	0.2066	0.0141	0.3976	0.0081	0.0236	0.0090
NBP[1]171*	0.4658	0.0317	0.9802	0.0201	0.0574	0.0218
NBP[1]195*	0.7015	0.0478	1.5755	0.0322	0.0912	0.0346
NBP[1]222*	0.5957	0.0406	1.4388	0.0294	0.0822	0.0312
NBP[1]248*	0.5440	0.0371	1.4128	0.0289	0.0798	0.0303
NBP[1]273*	0.4683	0.0319	1.3007	0.0266	0.0726	0.0276
NBP[1]299*	0.3834	0.0261	1.1353	0.0232	0.0627	0.0238
NBP[1]325*	0.2867	0.0195	0.9018	0.0185	0.0493	0.0187
NBP[1]351*	0.2375	0.0162	0.7943	0.0163	0.0430	0.0163
NBP[1]377*	0.2203	0.0150	0.7856	0.0161	0.0421	0.0160
NBP[1]402*	0.2037	0.0139	0.7748	0.0159	0.0411	0.0156
NBP[1]428*	0.1948	0.0133	0.7903	0.0162	0.0415	0.0158
NBP[1]454*	0.1948	0.0133	0.8449	0.0173	0.0439	0.0167
NBP[1]480*	0.1978	0.0135	0.9163	0.0188	0.0472	0.0179
NBP[1]505*	0.1918	0.0131	0.9473	0.0194	0.0483	0.0184
NBP[1]531*	0.1851	0.0126	0.9735	0.0199	0.0492	0.0187
NBP[1]557*	0.1784	0.0122	0.9975	0.0204	0.0500	0.0190
NBP[1]582*	0.1706	0.0116	1.0130	0.0207	0.0503	0.0191
NBP[1]608*	0.1643	0.0112	1.0350	0.0212	0.0510	0.0194
NBP[1]634*	0.1611	0.0110	1.0753	0.0220	0.0526	0.0200
NBP[1]659*	0.1586	0.0108	1.1194	0.0229	0.0543	0.0206
NBP[1]685*	0.1641	0.0112	1.2227	0.0250	0.0588	0.0223
NBP[1]711*	0.1715	0.0117	1.3445	0.0275	0.0642	0.0244
NBP[1]736*	0.1697	0.0116	1.3915	0.0285	0.0659	0.0250
NBP[1]762*	0.1653	0.0113	1.4214	0.0291	0.0669	0.0254
NBP[1]788*	0.1585	0.0108	1.4424	0.0295	0.0674	0.0256
NBP[1]825*	0.2655	0.0181	2.5963	0.0531	0.1201	0.0456
NBP[1]873*	0.1830	0.0125	1.9404	0.0397	0.0887	0.0337
NBP[1]926*	0.1437	0.0098	1.6472	0.0337	0.0744	0.0283
NBP[1]978*	0.1474	0.0100	1.8524	0.0379	0.0825	0.0313
NBP[1]1021*	0.0728	0.0050	0.9655	0.0198	0.0426	0.0162
NBP[1]1075*	0.0449	0.0031	0.6310	0.0129	0.0276	0.0105
NBP[1]1123*	0.0417	0.0028	0.6267	0.0128	0.0271	0.0103
NBP[1]1173*	0.0300	0.0020	0.4772	0.0098	0.0205	0.0078
NBP[1]1250*	0.0393	0.0027	0.6767	0.0138	0.0287	0.0109
NBP[1]1339*	0.0364	0.0025	0.6999	0.0143	0.0291	0.0111
NBP[1]1432*	0.0257	0.0017	0.5397	0.0110	0.0221	0.0084
NBP[1]1528*	0.0180	0.0012	0.4082	0.0084	0.0165	0.0063
NBP[1]1637*	0.0127	0.0009	0.3047	0.0062	0.0122	0.0046
NBP[1]1732*	0.0101	0.0007	0.2565	0.0052	0.0101	0.0039
NBP[1]1819*	0.0096	0.0007	0.2550	0.0052	0.0100	0.0038
NBP[1]1913*	0.0000	0.0000	0.0000	0.0000	0.0000	0.0000
Total	14.6765	1.0000	48.8600	1.0000	2.6329	1.0000

Licensed to: PETROCHEMICAL ENGINEERIN
* Specified by user.

Material Stream: 9 (continued)

Fluid Package: Basis-1
Property Package: Peng-Robinson

COMPOSITION

Vapour Phase

Phase Fraction 0.3311

COMPONENTS	MOLAR FLOW (kgmole/h)	MOLE FRACTION	MASS FLOW (tonne/d)	MASS FRACTION	LIQUID VOLUME FLOW (m3/h)	LIQUID VOLUME FRACTION
Methane	1.9542	0.4021	0.7524	0.1820	0.1047	0.2833
Ethane	0.8121	0.1671	0.5861	0.1418	0.0687	0.1858
Propane	0.8651	0.1780	0.9156	0.2215	0.0753	0.2037
i-Butane	0.1640	0.0338	0.2288	0.0554	0.0170	0.0459
n-Butane	0.3451	0.0710	0.4814	0.1165	0.0344	0.0931
i-Pentane	0.0782	0.0161	0.1355	0.0328	0.0091	0.0245
n-Pentane	0.0859	0.0177	0.1487	0.0360	0.0098	0.0266
n-Hexane	0.0919	0.0189	0.1901	0.0460	0.0120	0.0323
Nitrogen	0.0259	0.0053	0.0174	0.0042	0.0009	0.0024
CO2	0.1895	0.0390	0.2001	0.0484	0.0101	0.0273
H2S	0.0000	0.0000	0.0000	0.0000	0.0000	0.0000
H2O	0.0269	0.0055	0.0116	0.0028	0.0005	0.0013
NBP[1]95*	0.0260	0.0054	0.0425	0.0103	0.0026	0.0070
NBP[1]121*	0.0276	0.0057	0.0483	0.0117	0.0029	0.0079
NBP[1]147*	0.0298	0.0061	0.0573	0.0139	0.0034	0.0092
NBP[1]171*	0.0456	0.0094	0.0959	0.0232	0.0056	0.0152
NBP[1]195*	0.0453	0.0093	0.1018	0.0246	0.0059	0.0159
NBP[1]222*	0.0228	0.0047	0.0550	0.0133	0.0031	0.0085
NBP[1]248*	0.0123	0.0025	0.0321	0.0078	0.0018	0.0049
NBP[1]273*	0.0062	0.0013	0.0172	0.0042	0.0010	0.0026
NBP[1]299*	0.0029	0.0006	0.0085	0.0021	0.0005	0.0013
NBP[1]325*	0.0012	0.0002	0.0037	0.0009	0.0002	0.0005
NBP[1]351*	0.0005	0.0001	0.0017	0.0004	0.0001	0.0003
NBP[1]377*	0.0002	0.0001	0.0009	0.0002	0.0000	0.0001
NBP[1]402*	0.0001	0.0000	0.0004	0.0001	0.0000	0.0001
NBP[1]428*	0.0001	0.0000	0.0002	0.0001	0.0000	0.0000
NBP[1]454*	0.0000	0.0000	0.0001	0.0000	0.0000	0.0000
NBP[1]480*	0.0000	0.0000	0.0001	0.0000	0.0000	0.0000
NBP[1]505*	0.0000	0.0000	0.0000	0.0000	0.0000	0.0000
NBP[1]531*	0.0000	0.0000	0.0000	0.0000	0.0000	0.0000
NBP[1]557*	0.0000	0.0000	0.0000	0.0000	0.0000	0.0000
NBP[1]582*	0.0000	0.0000	0.0000	0.0000	0.0000	0.0000
NBP[1]608*	0.0000	0.0000	0.0000	0.0000	0.0000	0.0000
NBP[1]634*	0.0000	0.0000	0.0000	0.0000	0.0000	0.0000
NBP[1]659*	0.0000	0.0000	0.0000	0.0000	0.0000	0.0000
NBP[1]685*	0.0000	0.0000	0.0000	0.0000	0.0000	0.0000
NBP[1]711*	0.0000	0.0000	0.0000	0.0000	0.0000	0.0000
NBP[1]736*	0.0000	0.0000	0.0000	0.0000	0.0000	0.0000
NBP[1]762*	0.0000	0.0000	0.0000	0.0000	0.0000	0.0000
NBP[1]788*	0.0000	0.0000	0.0000	0.0000	0.0000	0.0000
NBP[1]825*	0.0000	0.0000	0.0000	0.0000	0.0000	0.0000
NBP[1]873*	0.0000	0.0000	0.0000	0.0000	0.0000	0.0000
NBP[1]926*	0.0000	0.0000	0.0000	0.0000	0.0000	0.0000
NBP[1]978*	0.0000	0.0000	0.0000	0.0000	0.0000	0.0000
NBP[1]1021*	0.0000	0.0000	0.0000	0.0000	0.0000	0.0000
NBP[1]1075*	0.0000	0.0000	0.0000	0.0000	0.0000	0.0000
NBP[1]1123*	0.0000	0.0000	0.0000	0.0000	0.0000	0.0000
NBP[1]1173*	0.0000	0.0000	0.0000	0.0000	0.0000	0.0000
NBP[1]1250*	0.0000	0.0000	0.0000	0.0000	0.0000	0.0000
NBP[1]1339*	0.0000	0.0000	0.0000	0.0000	0.0000	0.0000
NBP[1]1432*	0.0000	0.0000	0.0000	0.0000	0.0000	0.0000
NBP[1]1528*	0.0000	0.0000	0.0000	0.0000	0.0000	0.0000
NBP[1]1637*	0.0000	0.0000	0.0000	0.0000	0.0000	0.0000
NBP[1]1732*	0.0000	0.0000	0.0000	0.0000	0.0000	0.0000

* Specified by user.

Material Stream: 9 (continued)

Fluid Package: Basis-1
Property Package: Peng-Robinson

COMPOSITION

Vapour Phase (continued)

Phase Fraction 0.3311

COMPONENTS	MOLAR FLOW (kgmole/h)	MOLE FRACTION	MASS FLOW (tonne/d)	MASS FRACTION	LIQUID VOLUME FLOW (m3/h)	LIQUID VOLUME FRACTION
NBP[1]1819*	0.0000	0.0000	0.0000	0.0000	0.0000	0.0000
NBP[1]1913*	0.0000	0.0000	0.0000	0.0000	0.0000	0.0000
Total	4.8596	1.0000	4.1336	1.0000	0.3696	1.0000

Liquid Phase

Phase Fraction 9.919e-003

COMPONENTS	MOLAR FLOW (kgmole/h)	MOLE FRACTION	MASS FLOW (tonne/d)	MASS FRACTION	LIQUID VOLUME FLOW (m3/h)	LIQUID VOLUME FRACTION
Methane	0.0008	0.0052	0.0003	0.0001	0.0000	0.0004
Ethane	0.0009	0.0060	0.0006	0.0002	0.0001	0.0007
Propane	0.0021	0.0148	0.0023	0.0009	0.0002	0.0018
i-Butane	0.0008	0.0056	0.0011	0.0004	0.0001	0.0008
n-Butane	0.0020	0.0141	0.0029	0.0011	0.0002	0.0019
i-Pentane	0.0009	0.0065	0.0016	0.0006	0.0001	0.0010
n-Pentane	0.0012	0.0083	0.0021	0.0008	0.0001	0.0013
n-Hexane	0.0031	0.0213	0.0064	0.0025	0.0004	0.0038
Nitrogen	0.0000	0.0000	0.0000	0.0000	0.0000	0.0000
CO2	0.0002	0.0013	0.0002	0.0001	0.0000	0.0001
H2S	0.0000	0.0000	0.0000	0.0000	0.0000	0.0000
H2O	0.0000	0.0002	0.0000	0.0000	0.0000	0.0000
NBP[1]95*	0.0004	0.0024	0.0006	0.0002	0.0000	0.0003
NBP[1]121*	0.0005	0.0036	0.0009	0.0004	0.0001	0.0005
NBP[1]147*	0.0008	0.0055	0.0015	0.0006	0.0001	0.0009
NBP[1]171*	0.0017	0.0118	0.0036	0.0014	0.0002	0.0020
NBP[1]195*	0.0025	0.0169	0.0055	0.0021	0.0003	0.0030
NBP[1]222*	0.0020	0.0135	0.0047	0.0018	0.0003	0.0025
NBP[1]248*	0.0017	0.0115	0.0043	0.0017	0.0002	0.0023
NBP[1]273*	0.0013	0.0092	0.0037	0.0014	0.0002	0.0019
NBP[1]299*	0.0010	0.0070	0.0030	0.0012	0.0002	0.0016
NBP[1]325*	0.0007	0.0048	0.0022	0.0009	0.0001	0.0011
NBP[1]351*	0.0005	0.0037	0.0018	0.0007	0.0001	0.0009
NBP[1]377*	0.0005	0.0031	0.0016	0.0006	0.0001	0.0008
NBP[1]402*	0.0004	0.0027	0.0015	0.0006	0.0001	0.0007
NBP[1]428*	0.0003	0.0024	0.0014	0.0005	0.0001	0.0007
NBP[1]454*	0.0003	0.0022	0.0014	0.0005	0.0001	0.0007
NBP[1]480*	0.0003	0.0020	0.0014	0.0005	0.0001	0.0007
NBP[1]505*	0.0003	0.0018	0.0013	0.0005	0.0001	0.0006
NBP[1]531*	0.0002	0.0016	0.0012	0.0005	0.0001	0.0006
NBP[1]557*	0.0002	0.0015	0.0012	0.0005	0.0001	0.0006
NBP[1]582*	0.0002	0.0013	0.0011	0.0004	0.0001	0.0005
NBP[1]608*	0.0002	0.0012	0.0011	0.0004	0.0001	0.0005
NBP[1]634*	0.0002	0.0011	0.0010	0.0004	0.0001	0.0005
NBP[1]659*	0.0001	0.0010	0.0010	0.0004	0.0000	0.0005
NBP[1]685*	0.0001	0.0010	0.0011	0.0004	0.0001	0.0005
NBP[1]711*	0.0001	0.0010	0.0011	0.0004	0.0001	0.0005
NBP[1]736*	0.0001	0.0009	0.0011	0.0004	0.0001	0.0005
NBP[1]762*	0.0001	0.0009	0.0011	0.0004	0.0001	0.0005
NBP[1]788*	0.0001	0.0009	0.0011	0.0004	0.0001	0.0005
NBP[1]825*	0.0002	0.0015	0.0021	0.0008	0.0001	0.0009
NBP[1]873*	0.0002	0.0012	0.0018	0.0007	0.0001	0.0008
NBP[1]926*	0.0002	0.0011	0.0019	0.0007	0.0001	0.0008
NBP[1]978*	0.0002	0.0015	0.0027	0.0010	0.0001	0.0011
NBP[1]1021*	0.0002	0.0011	0.0021	0.0008	0.0001	0.0009
NBP[1]1075*	0.0002	0.0014	0.0028	0.0011	0.0001	0.0012
NBP[1]1123*	0.0004	0.0026	0.0056	0.0022	0.0002	0.0023

* Specified by user.

Material Stream: 9 (continued)

Fluid Package: Basis-1
Property Package: Peng-Robinson

COMPOSITION

Liquid Phase (continued)

Phase Fraction 9.919e-003

COMPONENTS	MOLAR FLOW (kgmole/h)	MOLE FRACTION	MASS FLOW (tonne/d)	MASS FRACTION	LIQUID VOLUME FLOW (m3/h)	LIQUID VOLUME FRACTION
NBP[1]1173*	0.0008	0.0053	0.0122	0.0047	0.0005	0.0049
NBP[1]1250*	0.0076	0.0520	0.1303	0.0504	0.0055	0.0519
NBP[1]1339*	0.0307	0.2108	0.5905	0.2283	0.0246	0.2308
NBP[1]1432*	0.0256	0.1761	0.5390	0.2085	0.0221	0.2076
NBP[1]1528*	0.0180	0.1238	0.4082	0.1579	0.0165	0.1551
NBP[1]1637*	0.0127	0.0869	0.3047	0.1178	0.0122	0.1144
NBP[1]1732*	0.0101	0.0695	0.2565	0.0992	0.0101	0.0952
NBP[1]1819*	0.0096	0.0658	0.2550	0.0986	0.0100	0.0935
NBP[1]1913*	0.0000	0.0000	0.0000	0.0000	0.0000	0.0000
Total	0.1456	1.0000	2.5858	1.0000	0.1065	1.0000

Liquid Phase

Phase Fraction 0.6590

COMPONENTS	MOLAR FLOW (kgmole/h)	MOLE FRACTION	MASS FLOW (tonne/d)	MASS FRACTION	LIQUID VOLUME FLOW (m3/h)	LIQUID VOLUME FRACTION
Methane	0.0391	0.0040	0.0151	0.0004	0.0021	0.0010
Ethane	0.0712	0.0074	0.0514	0.0012	0.0060	0.0028
Propane	0.2341	0.0242	0.2478	0.0059	0.0204	0.0094
i-Butane	0.1035	0.0107	0.1443	0.0034	0.0107	0.0050
n-Butane	0.2902	0.0300	0.4049	0.0096	0.0289	0.0134
i-Pentane	0.1536	0.0159	0.2660	0.0063	0.0178	0.0082
n-Pentane	0.2147	0.0222	0.3717	0.0088	0.0246	0.0114
n-Hexane	0.6649	0.0687	1.3752	0.0326	0.0865	0.0401
Nitrogen	0.0002	0.0000	0.0001	0.0000	0.0000	0.0000
CO2	0.0099	0.0010	0.0105	0.0002	0.0005	0.0002
H2S	0.0000	0.0000	0.0000	0.0000	0.0000	0.0000
H2O	0.0015	0.0002	0.0006	0.0000	0.0000	0.0000
NBP[1]95*	0.0636	0.0066	0.1036	0.0025	0.0064	0.0029
NBP[1]121*	0.1037	0.0107	0.1814	0.0043	0.0110	0.0051
NBP[1]147*	0.1760	0.0182	0.3388	0.0080	0.0201	0.0093
NBP[1]171*	0.4185	0.0433	0.8807	0.0209	0.0515	0.0239
NBP[1]195*	0.6537	0.0676	1.4682	0.0348	0.0849	0.0394
NBP[1]222*	0.5709	0.0590	1.3790	0.0327	0.0788	0.0365
NBP[1]248*	0.5300	0.0548	1.3764	0.0327	0.0777	0.0360
NBP[1]273*	0.4608	0.0476	1.2798	0.0304	0.0714	0.0331
NBP[1]299*	0.3795	0.0392	1.1238	0.0267	0.0621	0.0288
NBP[1]325*	0.2848	0.0294	0.8959	0.0213	0.0490	0.0227
NBP[1]351*	0.2364	0.0244	0.7907	0.0188	0.0428	0.0198
NBP[1]377*	0.2196	0.0227	0.7831	0.0186	0.0420	0.0195
NBP[1]402*	0.2032	0.0210	0.7728	0.0183	0.0410	0.0190
NBP[1]428*	0.1944	0.0201	0.7887	0.0187	0.0414	0.0192
NBP[1]454*	0.1945	0.0201	0.8434	0.0200	0.0438	0.0203
NBP[1]480*	0.1975	0.0204	0.9149	0.0217	0.0471	0.0218
NBP[1]505*	0.1915	0.0198	0.9460	0.0224	0.0483	0.0224
NBP[1]531*	0.1849	0.0191	0.9722	0.0231	0.0491	0.0228
NBP[1]557*	0.1781	0.0184	0.9964	0.0236	0.0499	0.0231
NBP[1]582*	0.1704	0.0176	1.0119	0.0240	0.0503	0.0233
NBP[1]608*	0.1641	0.0170	1.0339	0.0245	0.0510	0.0236
NBP[1]634*	0.1609	0.0166	1.0742	0.0255	0.0525	0.0243
NBP[1]659*	0.1585	0.0164	1.1184	0.0265	0.0542	0.0251
NBP[1]685*	0.1640	0.0170	1.2217	0.0290	0.0588	0.0272
NBP[1]711*	0.1714	0.0177	1.3434	0.0319	0.0641	0.0297
NBP[1]736*	0.1696	0.0175	1.3904	0.0330	0.0659	0.0305
NBP[1]762*	0.1652	0.0171	1.4203	0.0337	0.0668	0.0310
NBP[1]788*	0.1584	0.0164	1.4412	0.0342	0.0673	0.0312

* Specified by user.

Material Stream: 9 (continued)

Fluid Package: Basis-1
Property Package: Peng-Robinson

COMPOSITION

Liquid Phase (continued)

Phase Fraction 0.6590

COMPONENTS	MOLAR FLOW (kgmole/h)	MOLE FRACTION	MASS FLOW (tonne/d)	MASS FRACTION	LIQUID VOLUME FLOW (m3/h)	LIQUID VOLUME FRACTION
NBP[1]825*	0.2652	0.0274	2.5942	0.0616	0.1200	0.0556
NBP[1]873*	0.1828	0.0189	1.9386	0.0460	0.0887	0.0411
NBP[1]926*	0.1436	0.0148	1.6453	0.0390	0.0744	0.0345
NBP[1]978*	0.1471	0.0152	1.8497	0.0439	0.0824	0.0382
NBP[1]1021*	0.0727	0.0075	0.9633	0.0229	0.0425	0.0197
NBP[1]1075*	0.0447	0.0046	0.6282	0.0149	0.0275	0.0127
NBP[1]1123*	0.0414	0.0043	0.6211	0.0147	0.0269	0.0125
NBP[1]1173*	0.0292	0.0030	0.4650	0.0110	0.0200	0.0093
NBP[1]1250*	0.0317	0.0033	0.5464	0.0130	0.0232	0.0107
NBP[1]1339*	0.0057	0.0006	0.1095	0.0026	0.0046	0.0021
NBP[1]1432*	0.0000	0.0000	0.0007	0.0000	0.0000	0.0000
NBP[1]1528*	0.0000	0.0000	0.0000	0.0000	0.0000	0.0000
NBP[1]1637*	0.0000	0.0000	0.0000	0.0000	0.0000	0.0000
NBP[1]1732*	0.0000	0.0000	0.0000	0.0000	0.0000	0.0000
NBP[1]1819*	0.0000	0.0000	0.0000	0.0000	0.0000	0.0000
NBP[1]1913*	0.0000	0.0000	0.0000	0.0000	0.0000	0.0000
Total	9.6713	1.0000	42.1407	1.0000	2.1569	1.0000

Material Stream: 10

Fluid Package: Basis-1
Property Package: Peng-Robinson

CONDITIONS

		Overall	Vapour Phase	Liquid Phase	Liquid Phase
Vapour / Phase Fraction		1.0000	1.0000	0.0000	0.0000
Temperature:	(F)	122.2	122.2	122.2	122.2
Pressure:	(psig)	20.00	20.00	20.00	20.00
Molar Flow	(MMSCFD)	9.757e-002	9.757e-002	0.0000	0.0000
Mass Flow	(tonne/d)	4.134	4.134	0.0000	0.0000
Std Ideal Liq Vol Flow	(barrel/day)	55.79	55.79	0.0000	0.0000
Molar Enthalpy	(kJ/kgmole)	-1.071e+005	-1.071e+005	-1.552e+006	-3.861e+005
Molar Entropy	(kJ/kgmole-C)	185.8	185.8	1690	301.6
Heat Flow	(MMBtu/hr)	-0.4931	-0.4931	0.0000	0.0000
Liq Vol Flow @Std Cond	(barrel/day)	64.33 *	64.33	0.0000	0.0000

PROPERTIES

		Overall	Vapour Phase	Liquid Phase	Liquid Phase
Molecular Weight		35.44	35.44	740.1	181.6
Molar Density	(kgmole/m3)	9.072e-002	9.072e-002	1.317	4.366
Mass Density	(kg/m3)	3.215	3.215	974.8	792.7
Act. Volume Flow	(barrel/day)	8086	8086	0.0000	0.0000
Mass Enthalpy	(kJ/kg)	-3021	-3021	-2097	-2127
Mass Entropy	(kJ/kg-C)	5.242	5.242	2.283	1.661
Heat Capacity	(kJ/kgmole-C)	65.73	65.73	1459	371.4
Mass Heat Capacity	(kJ/kg-C)	1.855	1.855	1.972	2.045
LHV Molar Basis (Std)	(Btu/SCF)	---	---	---	---
LHV Mass Basis (Std)	(kJ/kg)	---	---	---	---
Phase Fraction [Vol. Basis]		1.000	1.000	---	---
Phase Fraction [Mass Basis]		1.000	1.000	0.0000	0.0000
Partial Pressure of CO2	(psig)	-13.34	---	---	---
Cost Based on Flow	(Cost/s)	0.0000	0.0000	0.0000	0.0000
Act. Gas Flow	(ACT_m3/h)	53.57	53.57	---	---
Avg. Liq. Density	(kgmole/m3)	13.15	13.15	1.367	4.484
Specific Heat	(kJ/kgmole-C)	65.73	65.73	1459	371.4
Std. Gas Flow	(STD_m3/h)	114.9	114.9	0.0000	0.0000

* Specified by user.

Material Stream: 10 (continued)

Fluid Package: Basis-1
Property Package: Peng-Robinson

PROPERTIES

	Overall	Vapour Phase	Liquid Phase	Liquid Phase
Std. Ideal Liq. Mass Density (kg/m3)	466.0	466.0	1012	814.1
Act. Liq. Flow (barrel/day)	0.0000	---	---	0.0000
Z Factor	---	0.9811	6.757e-002	2.039e-002
Watson K	15.07	15.07	11.97	11.86
User Property	---	---	---	---
Partial Pressure of H2S (psig)	-14.70	---	---	---
Cp/(Cp - R)	1.145	1.145	1.006	1.023
Cp/Cv	1.157	1.157	1.200	1.023
Heat of Vap. (kJ/kgmole)	2.712e+004	---	---	---
Kinematic Viscosity (cSt)	3.343	3.343	2213	1.861
Liq. Mass Density (Std. Cond) (kg/m3)	404.1	404.1	996.4	820.3
Liq. Vol. Flow (Std. Cond) (barrel/day)	64.33	64.33	0.0000	0.0000
Liquid Fraction	0.0000	0.0000	1.000	1.000
Molar Volume (m3/kgmole)	11.02	11.02	0.7592	0.2290
Mass Heat of Vap. (kJ/kg)	765.2	---	---	---
Phase Fraction [Molar Basis]	1.0000	1.0000	0.0000	0.0000
Surface Tension (dyne/cm)	---	---	24.78	20.91
Thermal Conductivity (W/m-K)	2.553e-002	2.553e-002	0.1352	0.1111
Viscosity (cP)	1.075e-002	1.075e-002	2157	1.475
Cv (Semi-Ideal) (kJ/kgmole-C)	57.42	57.42	1451	---
Mass Cv (Semi-Ideal) (kJ/kg-C)	1.620	1.620	1.961	---
Cv (kJ/kgmole-C)	56.80	56.80	1216	---
Mass Cv (kJ/kg-C)	1.602	1.602	1.643	---
Cv (Ent. Method) (kJ/kgmole-C)	---	---	1325	---
Mass Cv (Ent. Method) (kJ/kg-C)	---	---	1.790	---
Cp/Cv (Ent. Method)	---	---	1.101	---
Reid VP at 37.8 C (psig)	771.1	771.1	---	-3.185
True VP at 37.8 C (psig)	1451	1451	15.93	14.82
Liq. Vol. Flow - Sum(Std. Cond) (barrel/day)	64.33	64.33	0.0000	0.0000
HHV Molar Basis (Std) (Btu/SCF)	---	---	---	---
HHV Mass Basis (Std) (kJ/kg)	---	---	---	---
CO2 Loading	---	---	---	---
CO2 App ML Con (kgmole/m3)	---	---	---	---
CO2 App WT Con (kgmol/kg)	---	---	---	---
Phase Fraction [Act. Vol. Basis]	1.000	1.000	0.0000	0.0000
Mass Exergy (kJ/kg)	60.95	---	---	---
Viscosity Index	-1.637	---	---	---
Ideal Gas Cp/Cv	1.147	1.147	1.007	1.028
Ideal Gas Cp (kJ/kgmole-C)	65.03	65.03	1230	301.1
Mass Ideal Gas Cp (kJ/kg-C)	1.835	1.835	1.662	1.658
Bubble Point Pressure (psig)	1526	---	---	---

COMPOSITION

Overall Phase

Vapour Fraction 1.0000

COMPONENTS	MOLAR FLOW (kgmole/h)	MOLE FRACTION	MASS FLOW (tonne/d)	MASS FRACTION	LIQUID VOLUME FLOW (m3/h)	LIQUID VOLUME FRACTION
Methane	1.9542	0.4021	0.7524	0.1820	0.1047	0.2833
Ethane	0.8121	0.1671	0.5861	0.1418	0.0687	0.1858
Propane	0.8651	0.1780	0.9156	0.2215	0.0753	0.2037
i-Butane	0.1640	0.0338	0.2288	0.0554	0.0170	0.0459
n-Butane	0.3451	0.0710	0.4814	0.1165	0.0344	0.0931
i-Pentane	0.0782	0.0161	0.1355	0.0328	0.0091	0.0245
n-Pentane	0.0859	0.0177	0.1487	0.0360	0.0098	0.0266
n-Hexane	0.0919	0.0189	0.1901	0.0460	0.0120	0.0323
Nitrogen	0.0259	0.0053	0.0174	0.0042	0.0009	0.0024
CO2	0.1895	0.0390	0.2001	0.0484	0.0101	0.0273

* Specified by user.

Material Stream: 10 (continued)

Fluid Package: Basis-1
Property Package: Peng-Robinson

COMPOSITION

Overall Phase (continued)

Vapour Fraction 1.0000

COMPONENTS	MOLAR FLOW (kgmole/h)	MOLE FRACTION	MASS FLOW (tonne/d)	MASS FRACTION	LIQUID VOLUME FLOW (m3/h)	LIQUID VOLUME FRACTION
H2S	0.0000	0.0000	0.0000	0.0000	0.0000	0.0000
H2O	0.0269	0.0055	0.0116	0.0028	0.0005	0.0013
NBP[1]95*	0.0260	0.0054	0.0425	0.0103	0.0026	0.0070
NBP[1]121*	0.0276	0.0057	0.0483	0.0117	0.0029	0.0079
NBP[1]147*	0.0298	0.0061	0.0573	0.0139	0.0034	0.0092
NBP[1]171*	0.0456	0.0094	0.0959	0.0232	0.0056	0.0152
NBP[1]195*	0.0453	0.0093	0.1018	0.0246	0.0059	0.0159
NBP[1]222*	0.0228	0.0047	0.0550	0.0133	0.0031	0.0085
NBP[1]248*	0.0123	0.0025	0.0321	0.0078	0.0018	0.0049
NBP[1]273*	0.0062	0.0013	0.0172	0.0042	0.0010	0.0026
NBP[1]299*	0.0029	0.0006	0.0085	0.0021	0.0005	0.0013
NBP[1]325*	0.0012	0.0002	0.0037	0.0009	0.0002	0.0005
NBP[1]351*	0.0005	0.0001	0.0017	0.0004	0.0001	0.0003
NBP[1]377*	0.0002	0.0001	0.0009	0.0002	0.0000	0.0001
NBP[1]402*	0.0001	0.0000	0.0004	0.0001	0.0000	0.0001
NBP[1]428*	0.0001	0.0000	0.0002	0.0001	0.0000	0.0000
NBP[1]454*	0.0000	0.0000	0.0001	0.0000	0.0000	0.0000
NBP[1]480*	0.0000	0.0000	0.0001	0.0000	0.0000	0.0000
NBP[1]505*	0.0000	0.0000	0.0000	0.0000	0.0000	0.0000
NBP[1]531*	0.0000	0.0000	0.0000	0.0000	0.0000	0.0000
NBP[1]557*	0.0000	0.0000	0.0000	0.0000	0.0000	0.0000
NBP[1]582*	0.0000	0.0000	0.0000	0.0000	0.0000	0.0000
NBP[1]608*	0.0000	0.0000	0.0000	0.0000	0.0000	0.0000
NBP[1]634*	0.0000	0.0000	0.0000	0.0000	0.0000	0.0000
NBP[1]659*	0.0000	0.0000	0.0000	0.0000	0.0000	0.0000
NBP[1]685*	0.0000	0.0000	0.0000	0.0000	0.0000	0.0000
NBP[1]711*	0.0000	0.0000	0.0000	0.0000	0.0000	0.0000
NBP[1]736*	0.0000	0.0000	0.0000	0.0000	0.0000	0.0000
NBP[1]762*	0.0000	0.0000	0.0000	0.0000	0.0000	0.0000
NBP[1]788*	0.0000	0.0000	0.0000	0.0000	0.0000	0.0000
NBP[1]825*	0.0000	0.0000	0.0000	0.0000	0.0000	0.0000
NBP[1]873*	0.0000	0.0000	0.0000	0.0000	0.0000	0.0000
NBP[1]926*	0.0000	0.0000	0.0000	0.0000	0.0000	0.0000
NBP[1]978*	0.0000	0.0000	0.0000	0.0000	0.0000	0.0000
NBP[1]1021*	0.0000	0.0000	0.0000	0.0000	0.0000	0.0000
NBP[1]1075*	0.0000	0.0000	0.0000	0.0000	0.0000	0.0000
NBP[1]1123*	0.0000	0.0000	0.0000	0.0000	0.0000	0.0000
NBP[1]1173*	0.0000	0.0000	0.0000	0.0000	0.0000	0.0000
NBP[1]1250*	0.0000	0.0000	0.0000	0.0000	0.0000	0.0000
NBP[1]1339*	0.0000	0.0000	0.0000	0.0000	0.0000	0.0000
NBP[1]1432*	0.0000	0.0000	0.0000	0.0000	0.0000	0.0000
NBP[1]1528*	0.0000	0.0000	0.0000	0.0000	0.0000	0.0000
NBP[1]1637*	0.0000	0.0000	0.0000	0.0000	0.0000	0.0000
NBP[1]1732*	0.0000	0.0000	0.0000	0.0000	0.0000	0.0000
NBP[1]1819*	0.0000	0.0000	0.0000	0.0000	0.0000	0.0000
NBP[1]1913*	0.0000	0.0000	0.0000	0.0000	0.0000	0.0000
Total	4.8596	1.0000	4.1336	1.0000	0.3696	1.0000

Vapour Phase

Phase Fraction 1.000

COMPONENTS	MOLAR FLOW (kgmole/h)	MOLE FRACTION	MASS FLOW (tonne/d)	MASS FRACTION	LIQUID VOLUME FLOW (m3/h)	LIQUID VOLUME FRACTION
Methane	1.9542	0.4021	0.7524	0.1820	0.1047	0.2833
Ethane	0.8121	0.1671	0.5861	0.1418	0.0687	0.1858
Propane	0.8651	0.1780	0.9156	0.2215	0.0753	0.2037

* Specified by user.

Material Stream: 10 (continued)

Fluid Package: Basis-1
Property Package: Peng-Robinson

COMPOSITION

Vapour Phase (continued)

Phase Fraction 1.000

COMPONENTS	MOLAR FLOW (kgmole/h)	MOLE FRACTION	MASS FLOW (tonne/d)	MASS FRACTION	LIQUID VOLUME FLOW (m3/h)	LIQUID VOLUME FRACTION
i-Butane	0.1640	0.0338	0.2288	0.0554	0.0170	0.0459
n-Butane	0.3451	0.0710	0.4814	0.1165	0.0344	0.0931
i-Pentane	0.0782	0.0161	0.1355	0.0328	0.0091	0.0245
n-Pentane	0.0859	0.0177	0.1487	0.0360	0.0098	0.0266
n-Hexane	0.0919	0.0189	0.1901	0.0460	0.0120	0.0323
Nitrogen	0.0259	0.0053	0.0174	0.0042	0.0009	0.0024
CO2	0.1895	0.0390	0.2001	0.0484	0.0101	0.0273
H2S	0.0000	0.0000	0.0000	0.0000	0.0000	0.0000
H2O	0.0269	0.0055	0.0116	0.0028	0.0005	0.0013
NBP[1]95*	0.0260	0.0054	0.0425	0.0103	0.0026	0.0070
NBP[1]121*	0.0276	0.0057	0.0483	0.0117	0.0029	0.0079
NBP[1]147*	0.0298	0.0061	0.0573	0.0139	0.0034	0.0092
NBP[1]171*	0.0456	0.0094	0.0959	0.0232	0.0056	0.0152
NBP[1]195*	0.0453	0.0093	0.1018	0.0246	0.0059	0.0159
NBP[1]222*	0.0228	0.0047	0.0550	0.0133	0.0031	0.0085
NBP[1]248*	0.0123	0.0025	0.0321	0.0078	0.0018	0.0049
NBP[1]273*	0.0062	0.0013	0.0172	0.0042	0.0010	0.0026
NBP[1]299*	0.0029	0.0006	0.0085	0.0021	0.0005	0.0013
NBP[1]325*	0.0012	0.0002	0.0037	0.0009	0.0002	0.0005
NBP[1]351*	0.0005	0.0001	0.0017	0.0004	0.0001	0.0003
NBP[1]377*	0.0002	0.0001	0.0009	0.0002	0.0000	0.0001
NBP[1]402*	0.0001	0.0000	0.0004	0.0001	0.0000	0.0001
NBP[1]428*	0.0001	0.0000	0.0002	0.0001	0.0000	0.0000
NBP[1]454*	0.0000	0.0000	0.0001	0.0000	0.0000	0.0000
NBP[1]480*	0.0000	0.0000	0.0001	0.0000	0.0000	0.0000
NBP[1]505*	0.0000	0.0000	0.0000	0.0000	0.0000	0.0000
NBP[1]531*	0.0000	0.0000	0.0000	0.0000	0.0000	0.0000
NBP[1]557*	0.0000	0.0000	0.0000	0.0000	0.0000	0.0000
NBP[1]582*	0.0000	0.0000	0.0000	0.0000	0.0000	0.0000
NBP[1]608*	0.0000	0.0000	0.0000	0.0000	0.0000	0.0000
NBP[1]634*	0.0000	0.0000	0.0000	0.0000	0.0000	0.0000
NBP[1]659*	0.0000	0.0000	0.0000	0.0000	0.0000	0.0000
NBP[1]685*	0.0000	0.0000	0.0000	0.0000	0.0000	0.0000
NBP[1]711*	0.0000	0.0000	0.0000	0.0000	0.0000	0.0000
NBP[1]736*	0.0000	0.0000	0.0000	0.0000	0.0000	0.0000
NBP[1]762*	0.0000	0.0000	0.0000	0.0000	0.0000	0.0000
NBP[1]788*	0.0000	0.0000	0.0000	0.0000	0.0000	0.0000
NBP[1]825*	0.0000	0.0000	0.0000	0.0000	0.0000	0.0000
NBP[1]873*	0.0000	0.0000	0.0000	0.0000	0.0000	0.0000
NBP[1]926*	0.0000	0.0000	0.0000	0.0000	0.0000	0.0000
NBP[1]978*	0.0000	0.0000	0.0000	0.0000	0.0000	0.0000
NBP[1]1021*	0.0000	0.0000	0.0000	0.0000	0.0000	0.0000
NBP[1]1075*	0.0000	0.0000	0.0000	0.0000	0.0000	0.0000
NBP[1]1123*	0.0000	0.0000	0.0000	0.0000	0.0000	0.0000
NBP[1]1173*	0.0000	0.0000	0.0000	0.0000	0.0000	0.0000
NBP[1]1250*	0.0000	0.0000	0.0000	0.0000	0.0000	0.0000
NBP[1]1339*	0.0000	0.0000	0.0000	0.0000	0.0000	0.0000
NBP[1]1432*	0.0000	0.0000	0.0000	0.0000	0.0000	0.0000
NBP[1]1528*	0.0000	0.0000	0.0000	0.0000	0.0000	0.0000
NBP[1]1637*	0.0000	0.0000	0.0000	0.0000	0.0000	0.0000
NBP[1]1732*	0.0000	0.0000	0.0000	0.0000	0.0000	0.0000
NBP[1]1819*	0.0000	0.0000	0.0000	0.0000	0.0000	0.0000
NBP[1]1913*	0.0000	0.0000	0.0000	0.0000	0.0000	0.0000
Total	4.8596	1.0000	4.1336	1.0000	0.3696	1.0000

* Specified by user.

Material Stream: 10 (continued)

Fluid Package: Basis-1
Property Package: Peng-Robinson

COMPOSITION

Liquid Phase

Phase Fraction 0.0000

COMPONENTS	MOLAR FLOW (kgmole/h)	MOLE FRACTION	MASS FLOW (tonne/d)	MASS FRACTION	LIQUID VOLUME FLOW (m3/h)	LIQUID VOLUME FRACTION
Methane	0.0000	0.0052	0.0000	0.0001	0.0000	0.0004
Ethane	0.0000	0.0060	0.0000	0.0002	0.0000	0.0007
Propane	0.0000	0.0148	0.0000	0.0009	0.0000	0.0018
i-Butane	0.0000	0.0056	0.0000	0.0004	0.0000	0.0008
n-Butane	0.0000	0.0141	0.0000	0.0011	0.0000	0.0019
i-Pentane	0.0000	0.0065	0.0000	0.0006	0.0000	0.0010
n-Pentane	0.0000	0.0083	0.0000	0.0008	0.0000	0.0013
n-Hexane	0.0000	0.0213	0.0000	0.0025	0.0000	0.0038
Nitrogen	0.0000	0.0000	0.0000	0.0000	0.0000	0.0000
CO2	0.0000	0.0013	0.0000	0.0001	0.0000	0.0001
H2S	0.0000	0.0000	0.0000	0.0000	0.0000	0.0000
H2O	0.0000	0.0002	0.0000	0.0000	0.0000	0.0000
NBP[1]95*	0.0000	0.0024	0.0000	0.0002	0.0000	0.0003
NBP[1]121*	0.0000	0.0036	0.0000	0.0004	0.0000	0.0005
NBP[1]147*	0.0000	0.0055	0.0000	0.0006	0.0000	0.0009
NBP[1]171*	0.0000	0.0118	0.0000	0.0014	0.0000	0.0020
NBP[1]195*	0.0000	0.0169	0.0000	0.0021	0.0000	0.0030
NBP[1]222*	0.0000	0.0135	0.0000	0.0018	0.0000	0.0025
NBP[1]248*	0.0000	0.0115	0.0000	0.0017	0.0000	0.0023
NBP[1]273*	0.0000	0.0092	0.0000	0.0014	0.0000	0.0019
NBP[1]299*	0.0000	0.0070	0.0000	0.0012	0.0000	0.0016
NBP[1]325*	0.0000	0.0048	0.0000	0.0009	0.0000	0.0011
NBP[1]351*	0.0000	0.0037	0.0000	0.0007	0.0000	0.0009
NBP[1]377*	0.0000	0.0031	0.0000	0.0006	0.0000	0.0008
NBP[1]402*	0.0000	0.0027	0.0000	0.0006	0.0000	0.0007
NBP[1]428*	0.0000	0.0024	0.0000	0.0005	0.0000	0.0007
NBP[1]454*	0.0000	0.0022	0.0000	0.0005	0.0000	0.0007
NBP[1]480*	0.0000	0.0020	0.0000	0.0005	0.0000	0.0007
NBP[1]505*	0.0000	0.0018	0.0000	0.0005	0.0000	0.0006
NBP[1]531*	0.0000	0.0016	0.0000	0.0005	0.0000	0.0006
NBP[1]557*	0.0000	0.0015	0.0000	0.0005	0.0000	0.0006
NBP[1]582*	0.0000	0.0013	0.0000	0.0004	0.0000	0.0005
NBP[1]608*	0.0000	0.0012	0.0000	0.0004	0.0000	0.0005
NBP[1]634*	0.0000	0.0011	0.0000	0.0004	0.0000	0.0005
NBP[1]659*	0.0000	0.0010	0.0000	0.0004	0.0000	0.0005
NBP[1]685*	0.0000	0.0010	0.0000	0.0004	0.0000	0.0005
NBP[1]711*	0.0000	0.0010	0.0000	0.0004	0.0000	0.0005
NBP[1]736*	0.0000	0.0009	0.0000	0.0004	0.0000	0.0005
NBP[1]762*	0.0000	0.0009	0.0000	0.0004	0.0000	0.0005
NBP[1]788*	0.0000	0.0009	0.0000	0.0004	0.0000	0.0005
NBP[1]825*	0.0000	0.0015	0.0000	0.0008	0.0000	0.0009
NBP[1]873*	0.0000	0.0012	0.0000	0.0007	0.0000	0.0008
NBP[1]926*	0.0000	0.0011	0.0000	0.0007	0.0000	0.0008
NBP[1]978*	0.0000	0.0015	0.0000	0.0010	0.0000	0.0011
NBP[1]1021*	0.0000	0.0011	0.0000	0.0008	0.0000	0.0009
NBP[1]1075*	0.0000	0.0014	0.0000	0.0011	0.0000	0.0012
NBP[1]1123*	0.0000	0.0026	0.0000	0.0022	0.0000	0.0023
NBP[1]1173*	0.0000	0.0053	0.0000	0.0047	0.0000	0.0049
NBP[1]1250*	0.0000	0.0520	0.0000	0.0504	0.0000	0.0519
NBP[1]1339*	0.0000	0.2108	0.0000	0.2283	0.0000	0.2308
NBP[1]1432*	0.0000	0.1761	0.0000	0.2085	0.0000	0.2076
NBP[1]1528*	0.0000	0.1238	0.0000	0.1579	0.0000	0.1551
NBP[1]1637*	0.0000	0.0869	0.0000	0.1178	0.0000	0.1144
NBP[1]1732*	0.0000	0.0695	0.0000	0.0992	0.0000	0.0952

* Specified by user.

Material Stream: 10 (continued)

Fluid Package: Basis-1
Property Package: Peng-Robinson

COMPOSITION

Liquid Phase (continued)

Phase Fraction 0.0000

COMPONENTS	MOLAR FLOW (kgmole/h)	MOLE FRACTION	MASS FLOW (tonne/d)	MASS FRACTION	LIQUID VOLUME FLOW (m3/h)	LIQUID VOLUME FRACTION
NBP[1]1819*	0.0000	0.0658	0.0000	0.0986	0.0000	0.0935
NBP[1]1913*	0.0000	0.0000	0.0000	0.0000	0.0000	0.0000
Total	0.0000	1.0000	0.0000	1.0000	0.0000	1.0000

Liquid Phase

Phase Fraction 0.0000

COMPONENTS	MOLAR FLOW (kgmole/h)	MOLE FRACTION	MASS FLOW (tonne/d)	MASS FRACTION	LIQUID VOLUME FLOW (m3/h)	LIQUID VOLUME FRACTION
Methane	0.0000	0.0040	0.0000	0.0004	0.0000	0.0010
Ethane	0.0000	0.0074	0.0000	0.0012	0.0000	0.0028
Propane	0.0000	0.0242	0.0000	0.0059	0.0000	0.0094
i-Butane	0.0000	0.0107	0.0000	0.0034	0.0000	0.0050
n-Butane	0.0000	0.0300	0.0000	0.0096	0.0000	0.0134
i-Pentane	0.0000	0.0159	0.0000	0.0063	0.0000	0.0082
n-Pentane	0.0000	0.0222	0.0000	0.0088	0.0000	0.0114
n-Hexane	0.0000	0.0687	0.0000	0.0326	0.0000	0.0401
Nitrogen	0.0000	0.0000	0.0000	0.0000	0.0000	0.0000
CO2	0.0000	0.0010	0.0000	0.0002	0.0000	0.0002
H2S	0.0000	0.0000	0.0000	0.0000	0.0000	0.0000
H2O	0.0000	0.0002	0.0000	0.0000	0.0000	0.0000
NBP[1]95*	0.0000	0.0066	0.0000	0.0025	0.0000	0.0029
NBP[1]121*	0.0000	0.0107	0.0000	0.0043	0.0000	0.0051
NBP[1]147*	0.0000	0.0182	0.0000	0.0080	0.0000	0.0093
NBP[1]171*	0.0000	0.0433	0.0000	0.0209	0.0000	0.0239
NBP[1]195*	0.0000	0.0676	0.0000	0.0348	0.0000	0.0394
NBP[1]222*	0.0000	0.0590	0.0000	0.0327	0.0000	0.0365
NBP[1]248*	0.0000	0.0548	0.0000	0.0327	0.0000	0.0360
NBP[1]273*	0.0000	0.0476	0.0000	0.0304	0.0000	0.0331
NBP[1]299*	0.0000	0.0392	0.0000	0.0267	0.0000	0.0288
NBP[1]325*	0.0000	0.0294	0.0000	0.0213	0.0000	0.0227
NBP[1]351*	0.0000	0.0244	0.0000	0.0188	0.0000	0.0198
NBP[1]377*	0.0000	0.0227	0.0000	0.0186	0.0000	0.0195
NBP[1]402*	0.0000	0.0210	0.0000	0.0183	0.0000	0.0190
NBP[1]428*	0.0000	0.0201	0.0000	0.0187	0.0000	0.0192
NBP[1]454*	0.0000	0.0201	0.0000	0.0200	0.0000	0.0203
NBP[1]480*	0.0000	0.0204	0.0000	0.0217	0.0000	0.0218
NBP[1]505*	0.0000	0.0198	0.0000	0.0224	0.0000	0.0224
NBP[1]531*	0.0000	0.0191	0.0000	0.0231	0.0000	0.0228
NBP[1]557*	0.0000	0.0184	0.0000	0.0236	0.0000	0.0231
NBP[1]582*	0.0000	0.0176	0.0000	0.0240	0.0000	0.0233
NBP[1]608*	0.0000	0.0170	0.0000	0.0245	0.0000	0.0236
NBP[1]634*	0.0000	0.0166	0.0000	0.0255	0.0000	0.0243
NBP[1]659*	0.0000	0.0164	0.0000	0.0265	0.0000	0.0251
NBP[1]685*	0.0000	0.0170	0.0000	0.0290	0.0000	0.0272
NBP[1]711*	0.0000	0.0177	0.0000	0.0319	0.0000	0.0297
NBP[1]736*	0.0000	0.0175	0.0000	0.0330	0.0000	0.0305
NBP[1]762*	0.0000	0.0171	0.0000	0.0337	0.0000	0.0310
NBP[1]788*	0.0000	0.0164	0.0000	0.0342	0.0000	0.0312
NBP[1]825*	0.0000	0.0274	0.0000	0.0616	0.0000	0.0556
NBP[1]873*	0.0000	0.0189	0.0000	0.0460	0.0000	0.0411
NBP[1]926*	0.0000	0.0148	0.0000	0.0390	0.0000	0.0345
NBP[1]978*	0.0000	0.0152	0.0000	0.0439	0.0000	0.0382
NBP[1]1021*	0.0000	0.0075	0.0000	0.0229	0.0000	0.0197
NBP[1]1075*	0.0000	0.0046	0.0000	0.0149	0.0000	0.0127
NBP[1]1123*	0.0000	0.0043	0.0000	0.0147	0.0000	0.0125

* Specified by user.

Material Stream: 10 (continued)

Fluid Package: Basis-1
Property Package: Peng-Robinson

COMPOSITION

Liquid Phase (continued)

Phase Fraction 0.0000

COMPONENTS	MOLAR FLOW (kgmole/h)	MOLE FRACTION	MASS FLOW (tonne/d)	MASS FRACTION	LIQUID VOLUME FLOW (m3/h)	LIQUID VOLUME FRACTION
NBP[1]1173*	0.0000	0.0030	0.0000	0.0110	0.0000	0.0093
NBP[1]1250*	0.0000	0.0033	0.0000	0.0130	0.0000	0.0107
NBP[1]1339*	0.0000	0.0006	0.0000	0.0026	0.0000	0.0021
NBP[1]1432*	0.0000	0.0000	0.0000	0.0000	0.0000	0.0000
NBP[1]1528*	0.0000	0.0000	0.0000	0.0000	0.0000	0.0000
NBP[1]1637*	0.0000	0.0000	0.0000	0.0000	0.0000	0.0000
NBP[1]1732*	0.0000	0.0000	0.0000	0.0000	0.0000	0.0000
NBP[1]1819*	0.0000	0.0000	0.0000	0.0000	0.0000	0.0000
NBP[1]1913*	0.0000	0.0000	0.0000	0.0000	0.0000	0.0000
Total	0.0000	1.0000	0.0000	1.0000	0.0000	1.0000

Material Stream: 11

Fluid Package: Basis-1
Property Package: Peng-Robinson

CONDITIONS

		Overall	Vapour Phase	Liquid Phase	Liquid Phase
Vapour / Phase Fraction		0.0000	0.0000	0.0148	0.9852
Temperature:	(F)	122.2	122.2	122.2	122.2
Pressure:	(psig)	20.00	20.00	20.00	20.00
Molar Flow	(MMSCFD)	0.1971	0.0000	2.923e-003	0.1942
Mass Flow	(tonne/d)	44.73	0.0000	2.586	42.14
Std Ideal Liq Vol Flow	(barrel/day)	341.7	0.0000	16.08	325.6
Molar Enthalpy	(kJ/kgmole)	-4.034e+005	-1.071e+005	-1.552e+006	-3.861e+005
Molar Entropy	(kJ/kgmole-C)	322.2	185.8	1690	301.6
Heat Flow	(MMBtu/hr)	-3.754	0.0000	-0.2141	-3.540
Liq Vol Flow @Std Cond	(barrel/day)	339.8 *	0.0000	16.32	323.1

PROPERTIES

		Overall	Vapour Phase	Liquid Phase	Liquid Phase
Molecular Weight		189.8	35.44	740.1	181.6
Molar Density	(kgmole/m3)	4.221	9.072e-002	1.317	4.366
Mass Density	(kg/m3)	801.3	3.215	974.8	792.7
Act. Volume Flow	(barrel/day)	351.1	0.0000	16.68	334.4
Mass Enthalpy	(kJ/kg)	-2125	-3021	-2097	-2127
Mass Entropy	(kJ/kg-C)	1.697	5.242	2.283	1.661
Heat Capacity	(kJ/kgmole-C)	387.5	65.73	1459	371.4
Mass Heat Capacity	(kJ/kg-C)	2.041	1.855	1.972	2.045
LHV Molar Basis (Std)	(Btu/SCF)	---	---	---	---
LHV Mass Basis (Std)	(kJ/kg)	---	---	---	---
Phase Fraction [Vol. Basis]		---	---	4.705e-002	0.9529
Phase Fraction [Mass Basis]		0.0000	0.0000	5.781e-002	0.9422
Partial Pressure of CO2	(psig)	-14.70	---	---	---
Cost Based on Flow	(Cost/s)	0.0000	0.0000	0.0000	0.0000
Act. Gas Flow	(ACT_m3/h)	---	---	---	---
Avg. Liq. Density	(kgmole/m3)	4.337	13.15	1.367	4.484
Specific Heat	(kJ/kgmole-C)	387.5	65.73	1459	371.4
Std. Gas Flow	(STD_m3/h)	232.1	0.0000	3.442	228.7
Std. Ideal Liq. Mass Density	(kg/m3)	823.4	466.0	1012	814.1
Act. Liq. Flow	(barrel/day)	351.1	---	16.68	334.4
Z Factor		---	0.9811	6.757e-002	2.039e-002
Watson K		11.83	15.07	11.97	11.86
User Property		---	---	---	---
Partial Pressure of H2S	(psig)	-14.70	---	---	---
Cp/(Cp - R)		1.022	1.145	1.006	1.023

* Specified by user.

Material Stream: 11 (continued)

Fluid Package: Basis-1
Property Package: Peng-Robinson

PROPERTIES

	Overall	Vapour Phase	Liquid Phase	Liquid Phase
Cp/Cv	1.022	1.157	1.200	1.023
Heat of Vap. (kJ/kgmole)	3.799e+005	---	---	---
Kinematic Viscosity (cSt)	2.248	3.343	2213	1.861
Liq. Mass Density (Std. Cond) (kg/m3)	827.8	404.1	996.4	820.3
Liq. Vol. Flow (Std. Cond) (barrel/day)	339.8	0.0000	16.32	323.1
Liquid Fraction	1.000	0.0000	1.000	1.000
Molar Volume (m3/kgmole)	0.2369	11.02	0.7592	0.2290
Mass Heat of Vap. (kJ/kg)	2001	---	---	---
Phase Fraction [Molar Basis]	0.0000	0.0000	0.0148	0.9852
Surface Tension (dyne/cm)	---	---	24.78	20.91
Thermal Conductivity (W/m-K)	0.1121	2.553e-002	0.1352	0.1111
Viscosity (cP)	2.248	1.075e-002	2157	1.475
Cv (Semi-Ideal) (kJ/kgmole-C)	379.2	57.42	1451	---
Mass Cv (Semi-Ideal) (kJ/kg-C)	1.997	1.620	1.961	---
Cv (kJ/kgmole-C)	379.2	56.80	1216	---
Mass Cv (kJ/kg-C)	1.997	1.602	1.643	---
Cv (Ent. Method) (kJ/kgmole-C)	---	---	1325	---
Mass Cv (Ent. Method) (kJ/kg-C)	---	---	1.790	---
Cp/Cv (Ent. Method)	---	---	1.101	---
Reid VP at 37.8 C (psig)	-3.332	771.1	---	-3.185
True VP at 37.8 C (psig)	14.31	1451	15.93	14.82
Liq. Vol. Flow - Sum(Std. Cond) (barrel/day)	16.32	0.0000	16.32	0.0000
HHV Molar Basis (Std) (Btu/SCF)	---	---	---	---
HHV Mass Basis (Std) (kJ/kg)	---	---	---	---
CO2 Loading	---	---	---	---
CO2 App ML Con (kgmole/m3)	4.356e-003	---	1.701e-003	4.489e-003
CO2 App WT Con (kgmol/kg)	5.437e-006	---	1.745e-006	5.663e-006
Phase Fraction [Act. Vol. Basis]	0.0000	0.0000	4.752e-002	0.9525
Mass Exergy (kJ/kg)	2.253	---	---	---
Viscosity Index	12.33	---	---	---
Ideal Gas Cp/Cv	1.027	1.147	1.007	1.028
Ideal Gas Cp (kJ/kgmole-C)	314.8	65.03	1230	301.1
Mass Ideal Gas Cp (kJ/kg-C)	1.658	1.835	1.662	1.658
Bubble Point Pressure (psig)	19.43	---	---	---

COMPOSITION

Overall Phase

Vapour Fraction 0.0000

COMPONENTS	MOLAR FLOW (kgmole/h)	MOLE FRACTION	MASS FLOW (tonne/d)	MASS FRACTION	LIQUID VOLUME FLOW (m3/h)	LIQUID VOLUME FRACTION
Methane	0.0399	0.0041	0.0154	0.0003	0.0021	0.0009
Ethane	0.0721	0.0073	0.0520	0.0012	0.0061	0.0027
Propane	0.2363	0.0241	0.2500	0.0056	0.0206	0.0091
i-Butane	0.1043	0.0106	0.1455	0.0033	0.0108	0.0048
n-Butane	0.2923	0.0298	0.4077	0.0091	0.0291	0.0129
i-Pentane	0.1545	0.0157	0.2676	0.0060	0.0179	0.0079
n-Pentane	0.2159	0.0220	0.3738	0.0084	0.0247	0.0109
n-Hexane	0.6680	0.0680	1.3816	0.0309	0.0869	0.0384
Nitrogen	0.0002	0.0000	0.0001	0.0000	0.0000	0.0000
CO2	0.0101	0.0010	0.0107	0.0002	0.0005	0.0002
H2S	0.0000	0.0000	0.0000	0.0000	0.0000	0.0000
H2O	0.0015	0.0002	0.0007	0.0000	0.0000	0.0000
NBP[1]95*	0.0639	0.0065	0.1042	0.0023	0.0064	0.0028
NBP[1]121*	0.1043	0.0106	0.1823	0.0041	0.0110	0.0049
NBP[1]147*	0.1768	0.0180	0.3404	0.0076	0.0202	0.0089
NBP[1]171*	0.4202	0.0428	0.8843	0.0198	0.0518	0.0229
NBP[1]195*	0.6562	0.0668	1.4737	0.0329	0.0853	0.0377

* Specified by user.

Material Stream: 11 (continued)

Fluid Package: Basis-1
Property Package: Peng-Robinson

COMPOSITION

Overall Phase (continued)

Vapour Fraction 0.0000

COMPONENTS	MOLAR FLOW (kgmole/h)	MOLE FRACTION	MASS FLOW (tonne/d)	MASS FRACTION	LIQUID VOLUME FLOW (m3/h)	LIQUID VOLUME FRACTION
NBP[1]222*	0.5729	0.0584	1.3838	0.0309	0.0791	0.0349
NBP[1]248*	0.5317	0.0542	1.3807	0.0309	0.0780	0.0344
NBP[1]273*	0.4621	0.0471	1.2835	0.0287	0.0717	0.0317
NBP[1]299*	0.3805	0.0388	1.1268	0.0252	0.0622	0.0275
NBP[1]325*	0.2855	0.0291	0.8981	0.0201	0.0491	0.0217
NBP[1]351*	0.2370	0.0241	0.7925	0.0177	0.0429	0.0190
NBP[1]377*	0.2201	0.0224	0.7847	0.0175	0.0420	0.0186
NBP[1]402*	0.2036	0.0207	0.7743	0.0173	0.0411	0.0181
NBP[1]428*	0.1947	0.0198	0.7901	0.0177	0.0415	0.0183
NBP[1]454*	0.1948	0.0198	0.8447	0.0189	0.0439	0.0194
NBP[1]480*	0.1977	0.0201	0.9162	0.0205	0.0472	0.0208
NBP[1]505*	0.1918	0.0195	0.9473	0.0212	0.0483	0.0213
NBP[1]531*	0.1851	0.0189	0.9734	0.0218	0.0492	0.0217
NBP[1]557*	0.1784	0.0182	0.9975	0.0223	0.0500	0.0221
NBP[1]582*	0.1706	0.0174	1.0130	0.0226	0.0503	0.0222
NBP[1]608*	0.1643	0.0167	1.0350	0.0231	0.0510	0.0225
NBP[1]634*	0.1611	0.0164	1.0753	0.0240	0.0526	0.0232
NBP[1]659*	0.1586	0.0162	1.1194	0.0250	0.0543	0.0240
NBP[1]685*	0.1641	0.0167	1.2227	0.0273	0.0588	0.0260
NBP[1]711*	0.1715	0.0175	1.3445	0.0301	0.0642	0.0284
NBP[1]736*	0.1697	0.0173	1.3915	0.0311	0.0659	0.0291
NBP[1]762*	0.1653	0.0168	1.4214	0.0318	0.0669	0.0295
NBP[1]788*	0.1585	0.0161	1.4424	0.0322	0.0674	0.0298
NBP[1]825*	0.2655	0.0270	2.5963	0.0580	0.1201	0.0531
NBP[1]873*	0.1830	0.0186	1.9404	0.0434	0.0887	0.0392
NBP[1]926*	0.1437	0.0146	1.6472	0.0368	0.0744	0.0329
NBP[1]978*	0.1474	0.0150	1.8524	0.0414	0.0825	0.0364
NBP[1]1021*	0.0728	0.0074	0.9655	0.0216	0.0426	0.0188
NBP[1]1075*	0.0449	0.0046	0.6310	0.0141	0.0276	0.0122
NBP[1]1123*	0.0417	0.0043	0.6267	0.0140	0.0271	0.0120
NBP[1]1173*	0.0300	0.0031	0.4772	0.0107	0.0205	0.0090
NBP[1]1250*	0.0393	0.0040	0.6767	0.0151	0.0287	0.0127
NBP[1]1339*	0.0364	0.0037	0.6999	0.0156	0.0291	0.0129
NBP[1]1432*	0.0257	0.0026	0.5397	0.0121	0.0221	0.0098
NBP[1]1528*	0.0180	0.0018	0.4082	0.0091	0.0165	0.0073
NBP[1]1637*	0.0127	0.0013	0.3047	0.0068	0.0122	0.0054
NBP[1]1732*	0.0101	0.0010	0.2565	0.0057	0.0101	0.0045
NBP[1]1819*	0.0096	0.0010	0.2550	0.0057	0.0100	0.0044
NBP[1]1913*	0.0000	0.0000	0.0000	0.0000	0.0000	0.0000
Total	9.8169	1.0000	44.7265	1.0000	2.2633	1.0000

Vapour Phase

Phase Fraction 0.0000

COMPONENTS	MOLAR FLOW (kgmole/h)	MOLE FRACTION	MASS FLOW (tonne/d)	MASS FRACTION	LIQUID VOLUME FLOW (m3/h)	LIQUID VOLUME FRACTION
Methane	0.0000	0.4021	0.0000	0.1820	0.0000	0.2833
Ethane	0.0000	0.1671	0.0000	0.1418	0.0000	0.1858
Propane	0.0000	0.1780	0.0000	0.2215	0.0000	0.2037
i-Butane	0.0000	0.0338	0.0000	0.0554	0.0000	0.0459
n-Butane	0.0000	0.0710	0.0000	0.1165	0.0000	0.0931
i-Pentane	0.0000	0.0161	0.0000	0.0328	0.0000	0.0245
n-Pentane	0.0000	0.0177	0.0000	0.0360	0.0000	0.0266
n-Hexane	0.0000	0.0189	0.0000	0.0460	0.0000	0.0323
Nitrogen	0.0000	0.0053	0.0000	0.0042	0.0000	0.0024
CO2	0.0000	0.0390	0.0000	0.0484	0.0000	0.0273

* Specified by user.

Material Stream: 11 (continued)

Fluid Package: Basis-1
Property Package: Peng-Robinson

COMPOSITION

Vapour Phase (continued)

Phase Fraction 0.0000

COMPONENTS	MOLAR FLOW (kgmole/h)	MOLE FRACTION	MASS FLOW (tonne/d)	MASS FRACTION	LIQUID VOLUME FLOW (m3/h)	LIQUID VOLUME FRACTION
H2S	0.0000	0.0000	0.0000	0.0000	0.0000	0.0000
H2O	0.0000	0.0055	0.0000	0.0028	0.0000	0.0013
NBP[1]95*	0.0000	0.0054	0.0000	0.0103	0.0000	0.0070
NBP[1]121*	0.0000	0.0057	0.0000	0.0117	0.0000	0.0079
NBP[1]147*	0.0000	0.0061	0.0000	0.0139	0.0000	0.0092
NBP[1]171*	0.0000	0.0094	0.0000	0.0232	0.0000	0.0152
NBP[1]195*	0.0000	0.0093	0.0000	0.0246	0.0000	0.0159
NBP[1]222*	0.0000	0.0047	0.0000	0.0133	0.0000	0.0085
NBP[1]248*	0.0000	0.0025	0.0000	0.0078	0.0000	0.0049
NBP[1]273*	0.0000	0.0013	0.0000	0.0042	0.0000	0.0026
NBP[1]299*	0.0000	0.0006	0.0000	0.0021	0.0000	0.0013
NBP[1]325*	0.0000	0.0002	0.0000	0.0009	0.0000	0.0005
NBP[1]351*	0.0000	0.0001	0.0000	0.0004	0.0000	0.0003
NBP[1]377*	0.0000	0.0001	0.0000	0.0002	0.0000	0.0001
NBP[1]402*	0.0000	0.0000	0.0000	0.0001	0.0000	0.0001
NBP[1]428*	0.0000	0.0000	0.0000	0.0001	0.0000	0.0000
NBP[1]454*	0.0000	0.0000	0.0000	0.0000	0.0000	0.0000
NBP[1]480*	0.0000	0.0000	0.0000	0.0000	0.0000	0.0000
NBP[1]505*	0.0000	0.0000	0.0000	0.0000	0.0000	0.0000
NBP[1]531*	0.0000	0.0000	0.0000	0.0000	0.0000	0.0000
NBP[1]557*	0.0000	0.0000	0.0000	0.0000	0.0000	0.0000
NBP[1]582*	0.0000	0.0000	0.0000	0.0000	0.0000	0.0000
NBP[1]608*	0.0000	0.0000	0.0000	0.0000	0.0000	0.0000
NBP[1]634*	0.0000	0.0000	0.0000	0.0000	0.0000	0.0000
NBP[1]659*	0.0000	0.0000	0.0000	0.0000	0.0000	0.0000
NBP[1]685*	0.0000	0.0000	0.0000	0.0000	0.0000	0.0000
NBP[1]711*	0.0000	0.0000	0.0000	0.0000	0.0000	0.0000
NBP[1]736*	0.0000	0.0000	0.0000	0.0000	0.0000	0.0000
NBP[1]762*	0.0000	0.0000	0.0000	0.0000	0.0000	0.0000
NBP[1]788*	0.0000	0.0000	0.0000	0.0000	0.0000	0.0000
NBP[1]825*	0.0000	0.0000	0.0000	0.0000	0.0000	0.0000
NBP[1]873*	0.0000	0.0000	0.0000	0.0000	0.0000	0.0000
NBP[1]926*	0.0000	0.0000	0.0000	0.0000	0.0000	0.0000
NBP[1]978*	0.0000	0.0000	0.0000	0.0000	0.0000	0.0000
NBP[1]1021*	0.0000	0.0000	0.0000	0.0000	0.0000	0.0000
NBP[1]1075*	0.0000	0.0000	0.0000	0.0000	0.0000	0.0000
NBP[1]1123*	0.0000	0.0000	0.0000	0.0000	0.0000	0.0000
NBP[1]1173*	0.0000	0.0000	0.0000	0.0000	0.0000	0.0000
NBP[1]1250*	0.0000	0.0000	0.0000	0.0000	0.0000	0.0000
NBP[1]1339*	0.0000	0.0000	0.0000	0.0000	0.0000	0.0000
NBP[1]1432*	0.0000	0.0000	0.0000	0.0000	0.0000	0.0000
NBP[1]1528*	0.0000	0.0000	0.0000	0.0000	0.0000	0.0000
NBP[1]1637*	0.0000	0.0000	0.0000	0.0000	0.0000	0.0000
NBP[1]1732*	0.0000	0.0000	0.0000	0.0000	0.0000	0.0000
NBP[1]1819*	0.0000	0.0000	0.0000	0.0000	0.0000	0.0000
NBP[1]1913*	0.0000	0.0000	0.0000	0.0000	0.0000	0.0000
Total	0.0000	1.0000	0.0000	1.0000	0.0000	1.0000

Liquid Phase

Phase Fraction 1.483e-002

COMPONENTS	MOLAR FLOW (kgmole/h)	MOLE FRACTION	MASS FLOW (tonne/d)	MASS FRACTION	LIQUID VOLUME FLOW (m3/h)	LIQUID VOLUME FRACTION
Methane	0.0008	0.0052	0.0003	0.0001	0.0000	0.0004
Ethane	0.0009	0.0060	0.0006	0.0002	0.0001	0.0007
Propane	0.0021	0.0148	0.0023	0.0009	0.0002	0.0018

* Specified by user.

Material Stream: 11 (continued)

Fluid Package: Basis-1
Property Package: Peng-Robinson

COMPOSITION

Liquid Phase (continued)

Phase Fraction 1.483e-002

COMPONENTS	MOLAR FLOW (kgmole/h)	MOLE FRACTION	MASS FLOW (tonne/d)	MASS FRACTION	LIQUID VOLUME FLOW (m3/h)	LIQUID VOLUME FRACTION
i-Butane	0.0008	0.0056	0.0011	0.0004	0.0001	0.0008
n-Butane	0.0020	0.0141	0.0029	0.0011	0.0002	0.0019
i-Pentane	0.0009	0.0065	0.0016	0.0006	0.0001	0.0010
n-Pentane	0.0012	0.0083	0.0021	0.0008	0.0001	0.0013
n-Hexane	0.0031	0.0213	0.0064	0.0025	0.0004	0.0038
Nitrogen	0.0000	0.0000	0.0000	0.0000	0.0000	0.0000
CO2	0.0002	0.0013	0.0002	0.0001	0.0000	0.0001
H2S	0.0000	0.0000	0.0000	0.0000	0.0000	0.0000
H2O	0.0000	0.0002	0.0000	0.0000	0.0000	0.0000
NBP[1]95*	0.0004	0.0024	0.0006	0.0002	0.0000	0.0003
NBP[1]121*	0.0005	0.0036	0.0009	0.0004	0.0001	0.0005
NBP[1]147*	0.0008	0.0055	0.0015	0.0006	0.0001	0.0009
NBP[1]171*	0.0017	0.0118	0.0036	0.0014	0.0002	0.0020
NBP[1]195*	0.0025	0.0169	0.0055	0.0021	0.0003	0.0030
NBP[1]222*	0.0020	0.0135	0.0047	0.0018	0.0003	0.0025
NBP[1]248*	0.0017	0.0115	0.0043	0.0017	0.0002	0.0023
NBP[1]273*	0.0013	0.0092	0.0037	0.0014	0.0002	0.0019
NBP[1]299*	0.0010	0.0070	0.0030	0.0012	0.0002	0.0016
NBP[1]325*	0.0007	0.0048	0.0022	0.0009	0.0001	0.0011
NBP[1]351*	0.0005	0.0037	0.0018	0.0007	0.0001	0.0009
NBP[1]377*	0.0005	0.0031	0.0016	0.0006	0.0001	0.0008
NBP[1]402*	0.0004	0.0027	0.0015	0.0006	0.0001	0.0007
NBP[1]428*	0.0003	0.0024	0.0014	0.0005	0.0001	0.0007
NBP[1]454*	0.0003	0.0022	0.0014	0.0005	0.0001	0.0007
NBP[1]480*	0.0003	0.0020	0.0014	0.0005	0.0001	0.0007
NBP[1]505*	0.0003	0.0018	0.0013	0.0005	0.0001	0.0006
NBP[1]531*	0.0002	0.0016	0.0012	0.0005	0.0001	0.0006
NBP[1]557*	0.0002	0.0015	0.0012	0.0005	0.0001	0.0006
NBP[1]582*	0.0002	0.0013	0.0011	0.0004	0.0001	0.0005
NBP[1]608*	0.0002	0.0012	0.0011	0.0004	0.0001	0.0005
NBP[1]634*	0.0002	0.0011	0.0010	0.0004	0.0001	0.0005
NBP[1]659*	0.0001	0.0010	0.0010	0.0004	0.0000	0.0005
NBP[1]685*	0.0001	0.0010	0.0011	0.0004	0.0001	0.0005
NBP[1]711*	0.0001	0.0010	0.0011	0.0004	0.0001	0.0005
NBP[1]736*	0.0001	0.0009	0.0011	0.0004	0.0001	0.0005
NBP[1]762*	0.0001	0.0009	0.0011	0.0004	0.0001	0.0005
NBP[1]788*	0.0001	0.0009	0.0011	0.0004	0.0001	0.0005
NBP[1]825*	0.0002	0.0015	0.0021	0.0008	0.0001	0.0009
NBP[1]873*	0.0002	0.0012	0.0018	0.0007	0.0001	0.0008
NBP[1]926*	0.0002	0.0011	0.0019	0.0007	0.0001	0.0008
NBP[1]978*	0.0002	0.0015	0.0027	0.0010	0.0001	0.0011
NBP[1]1021*	0.0002	0.0011	0.0021	0.0008	0.0001	0.0009
NBP[1]1075*	0.0002	0.0014	0.0028	0.0011	0.0001	0.0012
NBP[1]1123*	0.0004	0.0026	0.0056	0.0022	0.0002	0.0023
NBP[1]1173*	0.0008	0.0053	0.0122	0.0047	0.0005	0.0049
NBP[1]1250*	0.0076	0.0520	0.1303	0.0504	0.0055	0.0519
NBP[1]1339*	0.0307	0.2108	0.5905	0.2283	0.0246	0.2308
NBP[1]1432*	0.0256	0.1761	0.5390	0.2085	0.0221	0.2076
NBP[1]1528*	0.0180	0.1238	0.4082	0.1579	0.0165	0.1551
NBP[1]1637*	0.0127	0.0869	0.3047	0.1178	0.0122	0.1144
NBP[1]1732*	0.0101	0.0695	0.2565	0.0992	0.0101	0.0952
NBP[1]1819*	0.0096	0.0658	0.2550	0.0986	0.0100	0.0935
NBP[1]1913*	0.0000	0.0000	0.0000	0.0000	0.0000	0.0000
Total	0.1456	1.0000	2.5858	1.0000	0.1065	1.0000

* Specified by user.

Material Stream: 11 (continued)

Fluid Package: Basis-1
Property Package: Peng-Robinson

COMPOSITION

Liquid Phase

Phase Fraction 0.9852

COMPONENTS	MOLAR FLOW (kgmole/h)	MOLE FRACTION	MASS FLOW (tonne/d)	MASS FRACTION	LIQUID VOLUME FLOW (m3/h)	LIQUID VOLUME FRACTION
Methane	0.0391	0.0040	0.0151	0.0004	0.0021	0.0010
Ethane	0.0712	0.0074	0.0514	0.0012	0.0060	0.0028
Propane	0.2341	0.0242	0.2478	0.0059	0.0204	0.0094
i-Butane	0.1035	0.0107	0.1443	0.0034	0.0107	0.0050
n-Butane	0.2902	0.0300	0.4049	0.0096	0.0289	0.0134
i-Pentane	0.1536	0.0159	0.2660	0.0063	0.0178	0.0082
n-Pentane	0.2147	0.0222	0.3717	0.0088	0.0246	0.0114
n-Hexane	0.6649	0.0687	1.3752	0.0326	0.0865	0.0401
Nitrogen	0.0002	0.0000	0.0001	0.0000	0.0000	0.0000
CO2	0.0099	0.0010	0.0105	0.0002	0.0005	0.0002
H2S	0.0000	0.0000	0.0000	0.0000	0.0000	0.0000
H2O	0.0015	0.0002	0.0006	0.0000	0.0000	0.0000
NBP[1]95*	0.0636	0.0066	0.1036	0.0025	0.0064	0.0029
NBP[1]121*	0.1037	0.0107	0.1814	0.0043	0.0110	0.0051
NBP[1]147*	0.1760	0.0182	0.3388	0.0080	0.0201	0.0093
NBP[1]171*	0.4185	0.0433	0.8807	0.0209	0.0515	0.0239
NBP[1]195*	0.6537	0.0676	1.4682	0.0348	0.0849	0.0394
NBP[1]222*	0.5709	0.0590	1.3790	0.0327	0.0788	0.0365
NBP[1]248*	0.5300	0.0548	1.3764	0.0327	0.0777	0.0360
NBP[1]273*	0.4608	0.0476	1.2798	0.0304	0.0714	0.0331
NBP[1]299*	0.3795	0.0392	1.1238	0.0267	0.0621	0.0288
NBP[1]325*	0.2848	0.0294	0.8959	0.0213	0.0490	0.0227
NBP[1]351*	0.2364	0.0244	0.7907	0.0188	0.0428	0.0198
NBP[1]377*	0.2196	0.0227	0.7831	0.0186	0.0420	0.0195
NBP[1]402*	0.2032	0.0210	0.7728	0.0183	0.0410	0.0190
NBP[1]428*	0.1944	0.0201	0.7887	0.0187	0.0414	0.0192
NBP[1]454*	0.1945	0.0201	0.8434	0.0200	0.0438	0.0203
NBP[1]480*	0.1975	0.0204	0.9149	0.0217	0.0471	0.0218
NBP[1]505*	0.1915	0.0198	0.9460	0.0224	0.0483	0.0224
NBP[1]531*	0.1849	0.0191	0.9722	0.0231	0.0491	0.0228
NBP[1]557*	0.1781	0.0184	0.9964	0.0236	0.0499	0.0231
NBP[1]582*	0.1704	0.0176	1.0119	0.0240	0.0503	0.0233
NBP[1]608*	0.1641	0.0170	1.0339	0.0245	0.0510	0.0236
NBP[1]634*	0.1609	0.0166	1.0742	0.0255	0.0525	0.0243
NBP[1]659*	0.1585	0.0164	1.1184	0.0265	0.0542	0.0251
NBP[1]685*	0.1640	0.0170	1.2217	0.0290	0.0588	0.0272
NBP[1]711*	0.1714	0.0177	1.3434	0.0319	0.0641	0.0297
NBP[1]736*	0.1696	0.0175	1.3904	0.0330	0.0659	0.0305
NBP[1]762*	0.1652	0.0171	1.4203	0.0337	0.0668	0.0310
NBP[1]788*	0.1584	0.0164	1.4412	0.0342	0.0673	0.0312
NBP[1]825*	0.2652	0.0274	2.5942	0.0616	0.1200	0.0556
NBP[1]873*	0.1828	0.0189	1.9386	0.0460	0.0887	0.0411
NBP[1]926*	0.1436	0.0148	1.6453	0.0390	0.0744	0.0345
NBP[1]978*	0.1471	0.0152	1.8497	0.0439	0.0824	0.0382
NBP[1]1021*	0.0727	0.0075	0.9633	0.0229	0.0425	0.0197
NBP[1]1075*	0.0447	0.0046	0.6282	0.0149	0.0275	0.0127
NBP[1]1123*	0.0414	0.0043	0.6211	0.0147	0.0269	0.0125
NBP[1]1173*	0.0292	0.0030	0.4650	0.0110	0.0200	0.0093
NBP[1]1250*	0.0317	0.0033	0.5464	0.0130	0.0232	0.0107
NBP[1]1339*	0.0057	0.0006	0.1095	0.0026	0.0046	0.0021
NBP[1]1432*	0.0000	0.0000	0.0007	0.0000	0.0000	0.0000
NBP[1]1528*	0.0000	0.0000	0.0000	0.0000	0.0000	0.0000
NBP[1]1637*	0.0000	0.0000	0.0000	0.0000	0.0000	0.0000
NBP[1]1732*	0.0000	0.0000	0.0000	0.0000	0.0000	0.0000

* Specified by user.

Material Stream: 11 (continued)

Fluid Package: Basis-1
Property Package: Peng-Robinson

COMPOSITION

Liquid Phase (continued)

Phase Fraction 0.9852

COMPONENTS	MOLAR FLOW (kgmole/h)	MOLE FRACTION	MASS FLOW (tonne/d)	MASS FRACTION	LIQUID VOLUME FLOW (m3/h)	LIQUID VOLUME FRACTION
NBP[1]1819*	0.0000	0.0000	0.0000	0.0000	0.0000	0.0000
NBP[1]1913*	0.0000	0.0000	0.0000	0.0000	0.0000	0.0000
Total	9.6713	1.0000	42.1407	1.0000	2.1569	1.0000

Material Stream: 12

Fluid Package: Basis-1
Property Package: Peng-Robinson

CONDITIONS

		Overall	Vapour Phase			
Vapour / Phase Fraction		1.0000	1.0000			
Temperature:	(F)	101.2	101.2			
Pressure:	(psig)	20.00	20.00			
Molar Flow	(MMSCFD)	2.908	2.908			
Mass Flow	(tonne/d)	80.32	80.32			
Std Ideal Liq Vol Flow	(barrel/day)	1196	1196			
Molar Enthalpy	(kJ/kgmole)	-1.311e+005	-1.311e+005			
Molar Entropy	(kJ/kgmole-C)	181.9	181.9			
Heat Flow	(MMBtu/hr)	-17.99	-17.99			
Liq Vol Flow @Std Cond	(barrel/day)	5.152e+005 *	5.152e+005			

PROPERTIES

		Overall	Vapour Phase			
Molecular Weight		23.11	23.11			
Molar Density	(kgmole/m3)	9.289e-002	9.289e-002			
Mass Density	(kg/m3)	2.147	2.147			
Act. Volume Flow	(barrel/day)	2.353e+005	2.353e+005			
Mass Enthalpy	(kJ/kg)	-5673	-5673			
Mass Entropy	(kJ/kg-C)	7.873	7.873			
Heat Capacity	(kJ/kgmole-C)	38.65	38.65			
Mass Heat Capacity	(kJ/kg-C)	1.672	1.672			
LHV Molar Basis (Std)	(Btu/SCF)	---	---			
LHV Mass Basis (Std)	(kJ/kg)	---	---			
Phase Fraction [Vol. Basis]		1.000	1.000			
Phase Fraction [Mass Basis]		1.000	1.000			
Partial Pressure of CO2	(psig)	-8.276	---			
Cost Based on Flow	(Cost/s)	0.0000	0.0000			
Act. Gas Flow	(ACT_m3/h)	1559	1559			
Avg. Liq. Density	(kgmole/m3)	18.28	18.28			
Specific Heat	(kJ/kgmole-C)	38.65	38.65			
Std. Gas Flow	(STD_m3/h)	3424	3424			
Std. Ideal Liq. Mass Density	(kg/m3)	422.4	422.4			
Act. Liq. Flow	(barrel/day)	---	---			
Z Factor		0.9941	0.9941			
Watson K		14.60	14.60			
User Property		---	---			
Partial Pressure of H2S	(psig)	-14.70	---			
Cp/(Cp - R)		1.274	1.274			
Cp/Cv		1.284	1.284			
Heat of Vap.	(kJ/kgmole)	1.609e+004	---			
Kinematic Viscosity	(cSt)	5.884	5.884			
Liq. Mass Density (Std. Cond)	(kg/m3)	0.9806	0.9806			
Liq. Vol. Flow (Std. Cond)	(barrel/day)	5.152e+005	5.152e+005			
Liquid Fraction		0.0000	0.0000			
Molar Volume	(m3/kgmole)	10.77	10.77			

* Specified by user.

Material Stream: 12 (continued)

Fluid Package: Basis-1
Property Package: Peng-Robinson

PROPERTIES

		Overall	Vapour Phase			
Mass Heat of Vap.	(kJ/kg)	696.2	---			
Phase Fraction [Molar Basis]		1.0000	1.0000			
Surface Tension	(dyne/cm)	---	---			
Thermal Conductivity	(W/m-K)	3.016e-002	3.016e-002			
Viscosity	(cP)	1.263e-002	1.263e-002			
Cv (Semi-Ideal)	(kJ/kgmole-C)	30.33	30.33			
Mass Cv (Semi-Ideal)	(kJ/kg-C)	1.313	1.313			
Cv	(kJ/kgmole-C)	30.10	30.10			
Mass Cv	(kJ/kg-C)	1.303	1.303			
Cv (Ent. Method)	(kJ/kgmole-C)	---	---			
Mass Cv (Ent. Method)	(kJ/kg-C)	---	---			
Cp/Cv (Ent. Method)		---	---			
Reid VP at 37.8 C	(psig)	---	---			
True VP at 37.8 C	(psig)	---	---			
Liq. Vol. Flow - Sum(Std. Cond)	(barrel/day)	5.152e+005	5.152e+005			
HHV Molar Basis (Std)	(Btu/SCF)	---	---			
HHV Mass Basis (Std)	(kJ/kg)	---	---			
CO2 Loading		---	---			
CO2 App ML Con	(kgmole/m3)	---	---			
CO2 App WT Con	(kgmol/kg)	---	---			
Phase Fraction [Act. Vol. Basis]		1.000	1.000			
Mass Exergy	(kJ/kg)	92.21	---			
Viscosity Index		-9.055	---			
Ideal Gas Cp/Cv		1.277	1.277			
Ideal Gas Cp	(kJ/kgmole-C)	38.38	38.38			
Mass Ideal Gas Cp	(kJ/kg-C)	1.661	1.661			
Bubble Point Pressure	(psig)	---	---			

COMPOSITION

Overall Phase

Vapour Fraction 1.0000

COMPONENTS	MOLAR FLOW (kgmole/h)	MOLE FRACTION	MASS FLOW (tonne/d)	MASS FRACTION	LIQUID VOLUME FLOW (m3/h)	LIQUID VOLUME FRACTION
Methane	102.4022	0.7071	39.4279	0.4909	5.4872	0.6926
Ethane	6.0456	0.0417	4.3630	0.0543	0.5111	0.0645
Propane	1.2315	0.0085	1.3033	0.0162	0.1072	0.0135
i-Butane	0.1850	0.0013	0.2580	0.0032	0.0191	0.0024
n-Butane	0.3660	0.0025	0.5106	0.0064	0.0365	0.0046
i-Pentane	0.0887	0.0006	0.1536	0.0019	0.0103	0.0013
n-Pentane	0.0859	0.0006	0.1487	0.0019	0.0098	0.0012
n-Hexane	0.3012	0.0021	0.6231	0.0078	0.0392	0.0049
Nitrogen	7.0670	0.0488	4.7512	0.0592	0.2455	0.0310
CO2	26.7967	0.1850	28.3035	0.3524	1.4289	0.1804
H2S	0.0000	0.0000	0.0000	0.0000	0.0000	0.0000
H2O	0.0269	0.0002	0.0116	0.0001	0.0005	0.0001
NBP[1]95*	0.0260	0.0002	0.0425	0.0005	0.0026	0.0003
NBP[1]121*	0.0276	0.0002	0.0483	0.0006	0.0029	0.0004
NBP[1]147*	0.0298	0.0002	0.0573	0.0007	0.0034	0.0004
NBP[1]171*	0.0456	0.0003	0.0959	0.0012	0.0056	0.0007
NBP[1]195*	0.0453	0.0003	0.1018	0.0013	0.0059	0.0007
NBP[1]222*	0.0228	0.0002	0.0550	0.0007	0.0031	0.0004
NBP[1]248*	0.0123	0.0001	0.0321	0.0004	0.0018	0.0002
NBP[1]273*	0.0062	0.0000	0.0172	0.0002	0.0010	0.0001
NBP[1]299*	0.0029	0.0000	0.0085	0.0001	0.0005	0.0001
NBP[1]325*	0.0012	0.0000	0.0037	0.0000	0.0002	0.0000
NBP[1]351*	0.0005	0.0000	0.0017	0.0000	0.0001	0.0000
NBP[1]377*	0.0002	0.0000	0.0009	0.0000	0.0000	0.0000

Licensed to: PETROCHEMICAL ENGINEERIN
* Specified by user.

Material Stream: 12 (continued)

Fluid Package: Basis-1
Property Package: Peng-Robinson

COMPOSITION

Overall Phase (continued)

Vapour Fraction 1.0000

COMPONENTS	MOLAR FLOW (kgmole/h)	MOLE FRACTION	MASS FLOW (tonne/d)	MASS FRACTION	LIQUID VOLUME FLOW (m3/h)	LIQUID VOLUME FRACTION
NBP[1]402*	0.0001	0.0000	0.0004	0.0000	0.0000	0.0000
NBP[1]428*	0.0001	0.0000	0.0002	0.0000	0.0000	0.0000
NBP[1]454*	0.0000	0.0000	0.0001	0.0000	0.0000	0.0000
NBP[1]480*	0.0000	0.0000	0.0001	0.0000	0.0000	0.0000
NBP[1]505*	0.0000	0.0000	0.0000	0.0000	0.0000	0.0000
NBP[1]531*	0.0000	0.0000	0.0000	0.0000	0.0000	0.0000
NBP[1]557*	0.0000	0.0000	0.0000	0.0000	0.0000	0.0000
NBP[1]582*	0.0000	0.0000	0.0000	0.0000	0.0000	0.0000
NBP[1]608*	0.0000	0.0000	0.0000	0.0000	0.0000	0.0000
NBP[1]634*	0.0000	0.0000	0.0000	0.0000	0.0000	0.0000
NBP[1]659*	0.0000	0.0000	0.0000	0.0000	0.0000	0.0000
NBP[1]685*	0.0000	0.0000	0.0000	0.0000	0.0000	0.0000
NBP[1]711*	0.0000	0.0000	0.0000	0.0000	0.0000	0.0000
NBP[1]736*	0.0000	0.0000	0.0000	0.0000	0.0000	0.0000
NBP[1]762*	0.0000	0.0000	0.0000	0.0000	0.0000	0.0000
NBP[1]788*	0.0000	0.0000	0.0000	0.0000	0.0000	0.0000
NBP[1]825*	0.0000	0.0000	0.0000	0.0000	0.0000	0.0000
NBP[1]873*	0.0000	0.0000	0.0000	0.0000	0.0000	0.0000
NBP[1]926*	0.0000	0.0000	0.0000	0.0000	0.0000	0.0000
NBP[1]978*	0.0000	0.0000	0.0000	0.0000	0.0000	0.0000
NBP[1]1021*	0.0000	0.0000	0.0000	0.0000	0.0000	0.0000
NBP[1]1075*	0.0000	0.0000	0.0000	0.0000	0.0000	0.0000
NBP[1]1123*	0.0000	0.0000	0.0000	0.0000	0.0000	0.0000
NBP[1]1173*	0.0000	0.0000	0.0000	0.0000	0.0000	0.0000
NBP[1]1250*	0.0000	0.0000	0.0000	0.0000	0.0000	0.0000
NBP[1]1339*	0.0000	0.0000	0.0000	0.0000	0.0000	0.0000
NBP[1]1432*	0.0000	0.0000	0.0000	0.0000	0.0000	0.0000
NBP[1]1528*	0.0000	0.0000	0.0000	0.0000	0.0000	0.0000
NBP[1]1637*	0.0000	0.0000	0.0000	0.0000	0.0000	0.0000
NBP[1]1732*	0.0000	0.0000	0.0000	0.0000	0.0000	0.0000
NBP[1]1819*	0.0000	0.0000	0.0000	0.0000	0.0000	0.0000
NBP[1]1913*	0.0000	0.0000	0.0000	0.0000	0.0000	0.0000
Total	144.8175	1.0000	80.3204	1.0000	7.9224	1.0000

Vapour Phase

Phase Fraction 1.000

COMPONENTS	MOLAR FLOW (kgmole/h)	MOLE FRACTION	MASS FLOW (tonne/d)	MASS FRACTION	LIQUID VOLUME FLOW (m3/h)	LIQUID VOLUME FRACTION
Methane	102.4022	0.7071	39.4279	0.4909	5.4872	0.6926
Ethane	6.0456	0.0417	4.3630	0.0543	0.5111	0.0645
Propane	1.2315	0.0085	1.3033	0.0162	0.1072	0.0135
i-Butane	0.1850	0.0013	0.2580	0.0032	0.0191	0.0024
n-Butane	0.3660	0.0025	0.5106	0.0064	0.0365	0.0046
i-Pentane	0.0887	0.0006	0.1536	0.0019	0.0103	0.0013
n-Pentane	0.0859	0.0006	0.1487	0.0019	0.0098	0.0012
n-Hexane	0.3012	0.0021	0.6231	0.0078	0.0392	0.0049
Nitrogen	7.0670	0.0488	4.7512	0.0592	0.2455	0.0310
CO2	26.7967	0.1850	28.3035	0.3524	1.4289	0.1804
H2S	0.0000	0.0000	0.0000	0.0000	0.0000	0.0000
H2O	0.0269	0.0002	0.0116	0.0001	0.0005	0.0001
NBP[1]95*	0.0260	0.0002	0.0425	0.0005	0.0026	0.0003
NBP[1]121*	0.0276	0.0002	0.0483	0.0006	0.0029	0.0004
NBP[1]147*	0.0298	0.0002	0.0573	0.0007	0.0034	0.0004
NBP[1]171*	0.0456	0.0003	0.0959	0.0012	0.0056	0.0007
NBP[1]195*	0.0453	0.0003	0.1018	0.0013	0.0059	0.0007

Licensed to: PETROCHEMICAL ENGINEERIN
* Specified by user.

Material Stream: 12 (continued)

Fluid Package: Basis-1
Property Package: Peng-Robinson

COMPOSITION

Vapour Phase (continued)

Phase Fraction 1.000

COMPONENTS	MOLAR FLOW (kgmole/h)	MOLE FRACTION	MASS FLOW (tonne/d)	MASS FRACTION	LIQUID VOLUME FLOW (m3/h)	LIQUID VOLUME FRACTION
NBP[1]222*	0.0228	0.0002	0.0550	0.0007	0.0031	0.0004
NBP[1]248*	0.0123	0.0001	0.0321	0.0004	0.0018	0.0002
NBP[1]273*	0.0062	0.0000	0.0172	0.0002	0.0010	0.0001
NBP[1]299*	0.0029	0.0000	0.0085	0.0001	0.0005	0.0001
NBP[1]325*	0.0012	0.0000	0.0037	0.0000	0.0002	0.0000
NBP[1]351*	0.0005	0.0000	0.0017	0.0000	0.0001	0.0000
NBP[1]377*	0.0002	0.0000	0.0009	0.0000	0.0000	0.0000
NBP[1]402*	0.0001	0.0000	0.0004	0.0000	0.0000	0.0000
NBP[1]428*	0.0001	0.0000	0.0002	0.0000	0.0000	0.0000
NBP[1]454*	0.0000	0.0000	0.0001	0.0000	0.0000	0.0000
NBP[1]480*	0.0000	0.0000	0.0001	0.0000	0.0000	0.0000
NBP[1]505*	0.0000	0.0000	0.0000	0.0000	0.0000	0.0000
NBP[1]531*	0.0000	0.0000	0.0000	0.0000	0.0000	0.0000
NBP[1]557*	0.0000	0.0000	0.0000	0.0000	0.0000	0.0000
NBP[1]582*	0.0000	0.0000	0.0000	0.0000	0.0000	0.0000
NBP[1]608*	0.0000	0.0000	0.0000	0.0000	0.0000	0.0000
NBP[1]634*	0.0000	0.0000	0.0000	0.0000	0.0000	0.0000
NBP[1]659*	0.0000	0.0000	0.0000	0.0000	0.0000	0.0000
NBP[1]685*	0.0000	0.0000	0.0000	0.0000	0.0000	0.0000
NBP[1]711*	0.0000	0.0000	0.0000	0.0000	0.0000	0.0000
NBP[1]736*	0.0000	0.0000	0.0000	0.0000	0.0000	0.0000
NBP[1]762*	0.0000	0.0000	0.0000	0.0000	0.0000	0.0000
NBP[1]788*	0.0000	0.0000	0.0000	0.0000	0.0000	0.0000
NBP[1]825*	0.0000	0.0000	0.0000	0.0000	0.0000	0.0000
NBP[1]873*	0.0000	0.0000	0.0000	0.0000	0.0000	0.0000
NBP[1]926*	0.0000	0.0000	0.0000	0.0000	0.0000	0.0000
NBP[1]978*	0.0000	0.0000	0.0000	0.0000	0.0000	0.0000
NBP[1]1021*	0.0000	0.0000	0.0000	0.0000	0.0000	0.0000
NBP[1]1075*	0.0000	0.0000	0.0000	0.0000	0.0000	0.0000
NBP[1]1123*	0.0000	0.0000	0.0000	0.0000	0.0000	0.0000
NBP[1]1173*	0.0000	0.0000	0.0000	0.0000	0.0000	0.0000
NBP[1]1250*	0.0000	0.0000	0.0000	0.0000	0.0000	0.0000
NBP[1]1339*	0.0000	0.0000	0.0000	0.0000	0.0000	0.0000
NBP[1]1432*	0.0000	0.0000	0.0000	0.0000	0.0000	0.0000
NBP[1]1528*	0.0000	0.0000	0.0000	0.0000	0.0000	0.0000
NBP[1]1637*	0.0000	0.0000	0.0000	0.0000	0.0000	0.0000
NBP[1]1732*	0.0000	0.0000	0.0000	0.0000	0.0000	0.0000
NBP[1]1819*	0.0000	0.0000	0.0000	0.0000	0.0000	0.0000
NBP[1]1913*	0.0000	0.0000	0.0000	0.0000	0.0000	0.0000
Total	144.8175	1.0000	80.3204	1.0000	7.9224	1.0000

Material Stream: 9-2-2-8

Fluid Package: Basis-1
Property Package: Peng-Robinson

CONDITIONS

		Overall	Vapour Phase	Liquid Phase		
Vapour / Phase Fraction		0.9999	0.9999	0.0001		
Temperature:	(F)	329.4	329.4	329.4		
Pressure:	(psig)	2095 *	2095	2095		
Molar Flow	(MMSCFD)	5.381	5.381	5.240e-004		
Mass Flow	(tonne/d)	137.6	137.2	0.3260		
Std Ideal Liq Vol Flow	(barrel/day)	2403	2401	1.982		
Molar Enthalpy	(kJ/kgmole)	-8.389e+004	-8.380e+004	-9.628e+005		
Molar Entropy	(kJ/kgmole-C)	162.4	162.3	1655		

* Specified by user.

Material Stream: 9-2-2-8 (continued)

Fluid Package: Basis-1
Property Package: Peng-Robinson

CONDITIONS

	Overall	Vapour Phase	Liquid Phase
Heat Flow (MMBtu/hr)	-21.31	-21.29	-2.382e-002
Liq Vol Flow @Std Cond (barrel/day)	9.528e+005 *	9.528e+005	2.085

PROPERTIES

	Overall	Vapour Phase	Liquid Phase
Molecular Weight	21.39	21.34	520.4
Molar Density (kgmole/m3)	4.261	4.261	1.702
Mass Density (kg/m3)	91.12	90.93	885.8
Act. Volume Flow (barrel/day)	9496	9493	2.315
Mass Enthalpy (kJ/kg)	-3923	-3928	-1850
Mass Entropy (kJ/kg-C)	7.595	7.606	3.180
Heat Capacity (kJ/kgmole-C)	59.17	59.05	1275
Mass Heat Capacity (kJ/kg-C)	2.767	2.768	2.450
LHV Molar Basis (Std) (Btu/SCF)	---	---	---
LHV Mass Basis (Std) (kJ/kg)	---	---	---
Phase Fraction [Vol. Basis]	0.9992	0.9992	8.248e-004
Phase Fraction [Mass Basis]	0.9976	0.9976	2.370e-003
Partial Pressure of CO2 (psig)	57.20	---	---
Cost Based on Flow (Cost/s)	0.0000	0.0000	0.0000
Act. Gas Flow (ACT_m3/h)	62.89	62.89	---
Avg. Liq. Density (kgmole/m3)	16.84	16.85	1.988
Specific Heat (kJ/kgmole-C)	59.17	59.05	1275
Std. Gas Flow (STD_m3/h)	6337	6337	0.6171
Std. Ideal Liq. Mass Density (kg/m3)	360.1	359.5	1034
Act. Liq. Flow (barrel/day)	2.315	---	2.315
Z Factor	---	0.9365	2.344
Watson K	17.28	17.29	11.39
User Property	---	---	---
Partial Pressure of H2S (psig)	-14.69	---	---
Cp/(Cp - R)	1.163	1.164	1.007
Cp/Cv	1.348	1.349	1.099
Heat of Vap. (kJ/kgmole)	1.606e+004	---	---
Kinematic Viscosity (cSt)	---	0.2123	19.72
Liq. Mass Density (Std. Cond) (kg/m3)	0.9081	0.9060	983.5
Liq. Vol. Flow (Std. Cond) (barrel/day)	9.528e+005	9.528e+005	2.085
Liquid Fraction	9.738e-005	0.0000	1.000
Molar Volume (m3/kgmole)	0.2347	0.2347	0.5875
Mass Heat of Vap. (kJ/kg)	751.0	---	---
Phase Fraction [Molar Basis]	0.9999	0.9999	0.0001
Surface Tension (dyne/cm)	8.567	---	8.567
Thermal Conductivity (W/m-K)	---	5.953e-002	8.973e-002
Viscosity (cP)	---	1.930e-002	17.47
Cv (Semi-Ideal) (kJ/kgmole-C)	50.86	50.74	1266
Mass Cv (Semi-Ideal) (kJ/kg-C)	2.378	2.378	2.434
Cv (kJ/kgmole-C)	43.89	43.77	1160
Mass Cv (kJ/kg-C)	2.052	2.051	2.230
Cv (Ent. Method) (kJ/kgmole-C)	43.91	43.79	1194
Mass Cv (Ent. Method) (kJ/kg-C)	2.053	2.052	2.295
Cp/Cv (Ent. Method)	1.348	1.349	1.068
Reid VP at 37.8 C (psig)	---	---	85.65
True VP at 37.8 C (psig)	3607	---	1991
Liq. Vol. Flow - Sum(Std. Cond) (barrel/day)	9.528e+005	9.528e+005	2.085
HHV Molar Basis (Std) (Btu/SCF)	---	---	---
HHV Mass Basis (Std) (kJ/kg)	---	---	---
CO2 Loading	---	---	---
CO2 App ML Con (kgmole/m3)	---	---	4.386e-002
CO2 App WT Con (kgmol/kg)	---	---	4.951e-005

* Specified by user.

Material Stream: 9-2-2-8 (continued)

Fluid Package: Basis-1
Property Package: Peng-Robinson

PROPERTIES

	Overall	Vapour Phase	Liquid Phase		
Phase Fraction [Act. Vol. Basis]	0.9998	0.9998	2.438e-004		
Mass Exergy (kJ/kg)	595.2	---	---		
Viscosity Index	---	---	---		
Ideal Gas Cp/Cv	1.195	1.196	1.007		
Ideal Gas Cp (kJ/kgmole-C)	50.90	50.80	1127		
Mass Ideal Gas Cp (kJ/kg-C)	2.380	2.381	2.166		
Bubble Point Pressure (psig)	4369	---	---		

COMPOSITION

Overall Phase

Vapour Fraction 0.9999

COMPONENTS	MOLAR FLOW (kgmole/h)	MOLE FRACTION	MASS FLOW (tonne/d)	MASS FRACTION	LIQUID VOLUME FLOW (m3/h)	LIQUID VOLUME FRACTION
Methane	205.0219	0.7649	78.9395	0.5738	10.9860	0.6901
Ethane	27.6541	0.1032	19.9573	0.1451	2.3379	0.1469
Propane	13.5902	0.0507	14.3829	0.1046	1.1828	0.0743
i-Butane	1.5866	0.0059	2.2133	0.0161	0.1641	0.0103
n-Butane	2.8841	0.0108	4.0233	0.0292	0.2874	0.0181
i-Pentane	0.4635	0.0017	0.8025	0.0058	0.0536	0.0034
n-Pentane	0.4652	0.0017	0.8056	0.0059	0.0533	0.0033
n-Hexane	0.3694	0.0014	0.7639	0.0056	0.0480	0.0030
Nitrogen	5.5752	0.0208	3.7483	0.0272	0.1937	0.0122
CO2	9.1335	0.0341	9.6471	0.0701	0.4870	0.0306
H2S	0.0005	0.0000	0.0004	0.0000	0.0000	0.0000
H2O	0.3945	0.0015	0.1706	0.0012	0.0071	0.0004
NBP[1]95*	0.1425	0.0005	0.2323	0.0017	0.0142	0.0009
NBP[1]121*	0.1318	0.0005	0.2305	0.0017	0.0139	0.0009
NBP[1]147*	0.1254	0.0005	0.2414	0.0018	0.0144	0.0009
NBP[1]171*	0.1733	0.0006	0.3646	0.0027	0.0213	0.0013
NBP[1]195*	0.1579	0.0006	0.3546	0.0026	0.0205	0.0013
NBP[1]222*	0.0732	0.0003	0.1768	0.0013	0.0101	0.0006
NBP[1]248*	0.0375	0.0001	0.0974	0.0007	0.0055	0.0003
NBP[1]273*	0.0181	0.0001	0.0503	0.0004	0.0028	0.0002
NBP[1]299*	0.0083	0.0000	0.0245	0.0002	0.0014	0.0001
NBP[1]325*	0.0033	0.0000	0.0105	0.0001	0.0006	0.0000
NBP[1]351*	0.0015	0.0000	0.0050	0.0000	0.0003	0.0000
NBP[1]377*	0.0007	0.0000	0.0025	0.0000	0.0001	0.0000
NBP[1]402*	0.0003	0.0000	0.0013	0.0000	0.0001	0.0000
NBP[1]428*	0.0002	0.0000	0.0007	0.0000	0.0000	0.0000
NBP[1]454*	0.0001	0.0000	0.0003	0.0000	0.0000	0.0000
NBP[1]480*	0.0000	0.0000	0.0002	0.0000	0.0000	0.0000
NBP[1]505*	0.0000	0.0000	0.0001	0.0000	0.0000	0.0000
NBP[1]531*	0.0000	0.0000	0.0000	0.0000	0.0000	0.0000
NBP[1]557*	0.0000	0.0000	0.0000	0.0000	0.0000	0.0000
NBP[1]582*	0.0000	0.0000	0.0000	0.0000	0.0000	0.0000
NBP[1]608*	0.0000	0.0000	0.0000	0.0000	0.0000	0.0000
NBP[1]634*	0.0000	0.0000	0.0000	0.0000	0.0000	0.0000
NBP[1]659*	0.0000	0.0000	0.0000	0.0000	0.0000	0.0000
NBP[1]685*	0.0000	0.0000	0.0000	0.0000	0.0000	0.0000
NBP[1]711*	0.0000	0.0000	0.0000	0.0000	0.0000	0.0000
NBP[1]736*	0.0000	0.0000	0.0000	0.0000	0.0000	0.0000
NBP[1]762*	0.0000	0.0000	0.0000	0.0000	0.0000	0.0000
NBP[1]788*	0.0000	0.0000	0.0000	0.0000	0.0000	0.0000
NBP[1]825*	0.0000	0.0000	0.0000	0.0000	0.0000	0.0000
NBP[1]873*	0.0000	0.0000	0.0000	0.0000	0.0000	0.0000
NBP[1]926*	0.0000	0.0000	0.0000	0.0000	0.0000	0.0000
NBP[1]978*	0.0000	0.0000	0.0000	0.0000	0.0000	0.0000

* Specified by user.

Material Stream: 9-2-2-8 (continued)

Fluid Package: Basis-1
Property Package: Peng-Robinson

COMPOSITION

Overall Phase (continued)

Vapour Fraction 0.9999

COMPONENTS	MOLAR FLOW (kgmole/h)	MOLE FRACTION	MASS FLOW (tonne/d)	MASS FRACTION	LIQUID VOLUME FLOW (m3/h)	LIQUID VOLUME FRACTION
NBP[1]1021*	0.0000	0.0000	0.0000	0.0000	0.0000	0.0000
NBP[1]1075*	0.0000	0.0000	0.0000	0.0000	0.0000	0.0000
NBP[1]1123*	0.0000	0.0000	0.0000	0.0000	0.0000	0.0000
NBP[1]1173*	0.0000	0.0000	0.0000	0.0000	0.0000	0.0000
NBP[1]1250*	0.0000	0.0000	0.0000	0.0000	0.0000	0.0000
NBP[1]1339*	0.0000	0.0000	0.0000	0.0000	0.0000	0.0000
NBP[1]1432*	0.0000	0.0000	0.0000	0.0000	0.0000	0.0000
NBP[1]1528*	0.0000	0.0000	0.0000	0.0000	0.0000	0.0000
NBP[1]1637*	0.0000	0.0000	0.0000	0.0000	0.0000	0.0000
NBP[1]1732*	0.0000	0.0000	0.0000	0.0000	0.0000	0.0000
NBP[1]1819*	0.0001	0.0000	0.0029	0.0000	0.0001	0.0000
NBP[1]1913*	0.0112	0.0000	0.3148	0.0023	0.0121	0.0008
Total	268.0242	1.0000	137.5655	1.0000	15.9186	1.0000

Vapour Phase

Phase Fraction 0.9999

COMPONENTS	MOLAR FLOW (kgmole/h)	MOLE FRACTION	MASS FLOW (tonne/d)	MASS FRACTION	LIQUID VOLUME FLOW (m3/h)	LIQUID VOLUME FRACTION
Methane	205.0115	0.7650	78.9355	0.5752	10.9855	0.6907
Ethane	27.6523	0.1032	19.9561	0.1454	2.3378	0.1470
Propane	13.5892	0.0507	14.3819	0.1048	1.1827	0.0744
i-Butane	1.5865	0.0059	2.2131	0.0161	0.1641	0.0103
n-Butane	2.8838	0.0108	4.0229	0.0293	0.2874	0.0181
i-Pentane	0.4634	0.0017	0.8025	0.0058	0.0536	0.0034
n-Pentane	0.4652	0.0017	0.8055	0.0059	0.0533	0.0034
n-Hexane	0.3693	0.0014	0.7638	0.0056	0.0480	0.0030
Nitrogen	5.5749	0.0208	3.7481	0.0273	0.1937	0.0122
CO2	9.1329	0.0341	9.6464	0.0703	0.4870	0.0306
H2S	0.0005	0.0000	0.0004	0.0000	0.0000	0.0000
H2O	0.3944	0.0015	0.1705	0.0012	0.0071	0.0004
NBP[1]95*	0.1425	0.0005	0.2323	0.0017	0.0142	0.0009
NBP[1]121*	0.1318	0.0005	0.2305	0.0017	0.0139	0.0009
NBP[1]147*	0.1254	0.0005	0.2413	0.0018	0.0144	0.0009
NBP[1]171*	0.1732	0.0006	0.3645	0.0027	0.0213	0.0013
NBP[1]195*	0.1579	0.0006	0.3545	0.0026	0.0205	0.0013
NBP[1]222*	0.0732	0.0003	0.1768	0.0013	0.0101	0.0006
NBP[1]248*	0.0375	0.0001	0.0974	0.0007	0.0055	0.0003
NBP[1]273*	0.0181	0.0001	0.0503	0.0004	0.0028	0.0002
NBP[1]299*	0.0083	0.0000	0.0245	0.0002	0.0014	0.0001
NBP[1]325*	0.0033	0.0000	0.0105	0.0001	0.0006	0.0000
NBP[1]351*	0.0015	0.0000	0.0050	0.0000	0.0003	0.0000
NBP[1]377*	0.0007	0.0000	0.0025	0.0000	0.0001	0.0000
NBP[1]402*	0.0003	0.0000	0.0013	0.0000	0.0001	0.0000
NBP[1]428*	0.0002	0.0000	0.0007	0.0000	0.0000	0.0000
NBP[1]454*	0.0001	0.0000	0.0003	0.0000	0.0000	0.0000
NBP[1]480*	0.0000	0.0000	0.0002	0.0000	0.0000	0.0000
NBP[1]505*	0.0000	0.0000	0.0001	0.0000	0.0000	0.0000
NBP[1]531*	0.0000	0.0000	0.0000	0.0000	0.0000	0.0000
NBP[1]557*	0.0000	0.0000	0.0000	0.0000	0.0000	0.0000
NBP[1]582*	0.0000	0.0000	0.0000	0.0000	0.0000	0.0000
NBP[1]608*	0.0000	0.0000	0.0000	0.0000	0.0000	0.0000
NBP[1]634*	0.0000	0.0000	0.0000	0.0000	0.0000	0.0000
NBP[1]659*	0.0000	0.0000	0.0000	0.0000	0.0000	0.0000
NBP[1]685*	0.0000	0.0000	0.0000	0.0000	0.0000	0.0000
NBP[1]711*	0.0000	0.0000	0.0000	0.0000	0.0000	0.0000

* Specified by user.

Material Stream: 9-2-2-8 (continued)

Fluid Package: Basis-1
Property Package: Peng-Robinson

COMPOSITION

Vapour Phase (continued)

Phase Fraction 0.9999

COMPONENTS	MOLAR FLOW (kgmole/h)	MOLE FRACTION	MASS FLOW (tonne/d)	MASS FRACTION	LIQUID VOLUME FLOW (m3/h)	LIQUID VOLUME FRACTION
NBP[1]736*	0.0000	0.0000	0.0000	0.0000	0.0000	0.0000
NBP[1]762*	0.0000	0.0000	0.0000	0.0000	0.0000	0.0000
NBP[1]788*	0.0000	0.0000	0.0000	0.0000	0.0000	0.0000
NBP[1]825*	0.0000	0.0000	0.0000	0.0000	0.0000	0.0000
NBP[1]873*	0.0000	0.0000	0.0000	0.0000	0.0000	0.0000
NBP[1]926*	0.0000	0.0000	0.0000	0.0000	0.0000	0.0000
NBP[1]978*	0.0000	0.0000	0.0000	0.0000	0.0000	0.0000
NBP[1]1021*	0.0000	0.0000	0.0000	0.0000	0.0000	0.0000
NBP[1]1075*	0.0000	0.0000	0.0000	0.0000	0.0000	0.0000
NBP[1]1123*	0.0000	0.0000	0.0000	0.0000	0.0000	0.0000
NBP[1]1173*	0.0000	0.0000	0.0000	0.0000	0.0000	0.0000
NBP[1]1250*	0.0000	0.0000	0.0000	0.0000	0.0000	0.0000
NBP[1]1339*	0.0000	0.0000	0.0000	0.0000	0.0000	0.0000
NBP[1]1432*	0.0000	0.0000	0.0000	0.0000	0.0000	0.0000
NBP[1]1528*	0.0000	0.0000	0.0000	0.0000	0.0000	0.0000
NBP[1]1637*	0.0000	0.0000	0.0000	0.0000	0.0000	0.0000
NBP[1]1732*	0.0000	0.0000	0.0000	0.0000	0.0000	0.0000
NBP[1]1819*	0.0000	0.0000	0.0000	0.0000	0.0000	0.0000
NBP[1]1913*	0.0000	0.0000	0.0000	0.0000	0.0000	0.0000
Total	267.9981	1.0000	137.2395	1.0000	15.9054	1.0000

Liquid Phase

Phase Fraction 9.738e-005

COMPONENTS	MOLAR FLOW (kgmole/h)	MOLE FRACTION	MASS FLOW (tonne/d)	MASS FRACTION	LIQUID VOLUME FLOW (m3/h)	LIQUID VOLUME FRACTION
Methane	0.0104	0.3997	0.0040	0.0123	0.0006	0.0426
Ethane	0.0017	0.0659	0.0012	0.0038	0.0001	0.0111
Propane	0.0010	0.0387	0.0011	0.0033	0.0001	0.0067
i-Butane	0.0001	0.0053	0.0002	0.0006	0.0000	0.0011
n-Butane	0.0003	0.0100	0.0004	0.0011	0.0000	0.0020
i-Pentane	0.0000	0.0019	0.0001	0.0003	0.0000	0.0004
n-Pentane	0.0001	0.0020	0.0001	0.0003	0.0000	0.0004
n-Hexane	0.0000	0.0019	0.0001	0.0003	0.0000	0.0005
Nitrogen	0.0003	0.0108	0.0002	0.0006	0.0000	0.0007
CO2	0.0007	0.0258	0.0007	0.0022	0.0000	0.0027
H2S	0.0000	0.0000	0.0000	0.0000	0.0000	0.0000
H2O	0.0000	0.0011	0.0000	0.0000	0.0000	0.0000
NBP[1]95*	0.0000	0.0006	0.0000	0.0001	0.0000	0.0001
NBP[1]121*	0.0000	0.0006	0.0000	0.0001	0.0000	0.0001
NBP[1]147*	0.0000	0.0006	0.0000	0.0001	0.0000	0.0001
NBP[1]171*	0.0000	0.0009	0.0001	0.0002	0.0000	0.0002
NBP[1]195*	0.0000	0.0009	0.0001	0.0002	0.0000	0.0002
NBP[1]222*	0.0000	0.0005	0.0000	0.0001	0.0000	0.0001
NBP[1]248*	0.0000	0.0003	0.0000	0.0001	0.0000	0.0001
NBP[1]273*	0.0000	0.0001	0.0000	0.0000	0.0000	0.0000
NBP[1]299*	0.0000	0.0001	0.0000	0.0000	0.0000	0.0000
NBP[1]325*	0.0000	0.0000	0.0000	0.0000	0.0000	0.0000
NBP[1]351*	0.0000	0.0000	0.0000	0.0000	0.0000	0.0000
NBP[1]377*	0.0000	0.0000	0.0000	0.0000	0.0000	0.0000
NBP[1]402*	0.0000	0.0000	0.0000	0.0000	0.0000	0.0000
NBP[1]428*	0.0000	0.0000	0.0000	0.0000	0.0000	0.0000
NBP[1]454*	0.0000	0.0000	0.0000	0.0000	0.0000	0.0000
NBP[1]480*	0.0000	0.0000	0.0000	0.0000	0.0000	0.0000
NBP[1]505*	0.0000	0.0000	0.0000	0.0000	0.0000	0.0000
NBP[1]531*	0.0000	0.0000	0.0000	0.0000	0.0000	0.0000

* Specified by user.

Material Stream: 9-2-2-8 (continued)

Fluid Package: Basis-1
Property Package: Peng-Robinson

COMPOSITION

Liquid Phase (continued)

Phase Fraction 9.738e-005

COMPONENTS	MOLAR FLOW (kgmole/h)	MOLE FRACTION	MASS FLOW (tonne/d)	MASS FRACTION	LIQUID VOLUME FLOW (m3/h)	LIQUID VOLUME FRACTION
NBP[1]557*	0.0000	0.0000	0.0000	0.0000	0.0000	0.0000
NBP[1]582*	0.0000	0.0000	0.0000	0.0000	0.0000	0.0000
NBP[1]608*	0.0000	0.0000	0.0000	0.0000	0.0000	0.0000
NBP[1]634*	0.0000	0.0000	0.0000	0.0000	0.0000	0.0000
NBP[1]659*	0.0000	0.0000	0.0000	0.0000	0.0000	0.0000
NBP[1]685*	0.0000	0.0000	0.0000	0.0000	0.0000	0.0000
NBP[1]711*	0.0000	0.0000	0.0000	0.0000	0.0000	0.0000
NBP[1]736*	0.0000	0.0000	0.0000	0.0000	0.0000	0.0000
NBP[1]762*	0.0000	0.0000	0.0000	0.0000	0.0000	0.0000
NBP[1]788*	0.0000	0.0000	0.0000	0.0000	0.0000	0.0000
NBP[1]825*	0.0000	0.0000	0.0000	0.0000	0.0000	0.0000
NBP[1]873*	0.0000	0.0000	0.0000	0.0000	0.0000	0.0000
NBP[1]926*	0.0000	0.0000	0.0000	0.0000	0.0000	0.0000
NBP[1]978*	0.0000	0.0000	0.0000	0.0000	0.0000	0.0000
NBP[1]1021*	0.0000	0.0000	0.0000	0.0000	0.0000	0.0000
NBP[1]1075*	0.0000	0.0000	0.0000	0.0000	0.0000	0.0000
NBP[1]1123*	0.0000	0.0000	0.0000	0.0000	0.0000	0.0000
NBP[1]1173*	0.0000	0.0000	0.0000	0.0000	0.0000	0.0000
NBP[1]1250*	0.0000	0.0000	0.0000	0.0000	0.0000	0.0000
NBP[1]1339*	0.0000	0.0000	0.0000	0.0000	0.0000	0.0000
NBP[1]1432*	0.0000	0.0000	0.0000	0.0000	0.0000	0.0000
NBP[1]1528*	0.0000	0.0000	0.0000	0.0000	0.0000	0.0000
NBP[1]1637*	0.0000	0.0000	0.0000	0.0000	0.0000	0.0000
NBP[1]1732*	0.0000	0.0000	0.0000	0.0000	0.0000	0.0000
NBP[1]1819*	0.0001	0.0041	0.0029	0.0088	0.0001	0.0085
NBP[1]1913*	0.0112	0.4282	0.3148	0.9656	0.0121	0.9220
Total	0.0261	1.0000	0.3260	1.0000	0.0131	1.0000

Material Stream: FLASH-G

Fluid Package: Basis-1
Property Package: Peng-Robinson

CONDITIONS

		Overall
Vapour / Phase Fraction		---
Temperature:	(F)	---
Pressure:	(psig)	450.0
Molar Flow	(MMSCFD)	0.1359
Mass Flow	(tonne/d)	6.156 *
Std Ideal Liq Vol Flow	(barrel/day)	80.89
Molar Enthalpy	(kJ/kgmole)	---
Molar Entropy	(kJ/kgmole-C)	---
Heat Flow	(MMBtu/hr)	---
Liq Vol Flow @Std Cond	(barrel/day)	87.30 *

PROPERTIES

		Overall
Molecular Weight		37.88
Molar Density	(kgmole/m3)	---
Mass Density	(kg/m3)	---
Act. Volume Flow	(barrel/day)	---
Mass Enthalpy	(kJ/kg)	---
Mass Entropy	(kJ/kg-C)	---
Heat Capacity	(kJ/kgmole-C)	---
Mass Heat Capacity	(kJ/kg-C)	---

* Specified by user.

Material Stream: FLASH-G (continued)

Fluid Package: Basis-1
Property Package: Peng-Robinson

PROPERTIES

	Overall				
LHV Molar Basis (Std) (Btu/SCF)	---				
LHV Mass Basis (Std) (kJ/kg)	---				
Phase Fraction [Vol. Basis]	0.0000				
Phase Fraction [Mass Basis]	0.0000				
Partial Pressure of CO2 (psig)	-14.70				
Cost Based on Flow (Cost/s)	0.0000				
Act. Gas Flow (ACT_m3/h)	---				
Avg. Liq. Density (kgmole/m3)	12.64				
Specific Heat (kJ/kgmole-C)	---				
Std. Gas Flow (STD_m3/h)	160.1				
Std. Ideal Liq. Mass Density (kg/m3)	478.7				
Act. Liq. Flow (barrel/day)	---				
Z Factor	---				
Watson K	14.89				
User Property	---				
Partial Pressure of H2S (psig)	-14.70				
Cp/(Cp - R)	---				
Cp/Cv	---				
Heat of Vap. (kJ/kgmole)	---				
Kinematic Viscosity (cSt)	---				
Liq. Mass Density (Std. Cond) (kg/m3)	443.5				
Liq. Vol. Flow (Std. Cond) (barrel/day)	87.30				
Liquid Fraction	---				
Molar Volume (m3/kgmole)	---				
Mass Heat of Vap. (kJ/kg)	---				
Phase Fraction [Molar Basis]	---				
Surface Tension (dyne/cm)	---				
Thermal Conductivity (W/m-K)	---				
Viscosity (cP)	---				
Cv (Semi-Ideal) (kJ/kgmole-C)	---				
Mass Cv (Semi-Ideal) (kJ/kg-C)	---				
Cv (kJ/kgmole-C)	---				
Mass Cv (kJ/kg-C)	---				
Cv (Ent. Method) (kJ/kgmole-C)	---				
Mass Cv (Ent. Method) (kJ/kg-C)	---				
Cp/Cv (Ent. Method)	---				
Reid VP at 37.8 C (psig)	---				
True VP at 37.8 C (psig)	---				
Liq. Vol. Flow - Sum(Std. Cond) (barrel/day)	0.0000				
HHV Molar Basis (Std) (Btu/SCF)	---				
HHV Mass Basis (Std) (kJ/kg)	---				
CO2 Loading	---				
CO2 App ML Con (kgmole/m3)	---				
CO2 App WT Con (kgmol/kg)	1.012e-003				
Phase Fraction [Act. Vol. Basis]	0.0000				
Mass Exergy (kJ/kg)	9.741e+006				
Viscosity Index	---				
Ideal Gas Cp/Cv	1.000				
Ideal Gas Cp (kJ/kgmole-C)	6.915e+007				
Mass Ideal Gas Cp (kJ/kg-C)	1.825e+006				
Bubble Point Pressure (psig)	---				

* Specified by user.

Material Stream: FLASH-G (continued)

Fluid Package: Basis-1
Property Package: Peng-Robinson

COMPOSITION

Overall Phase

Vapour Fraction ---

COMPONENTS	MOLAR FLOW (kgmole/h)	MOLE FRACTION	MASS FLOW (tonne/d)	MASS FRACTION	LIQUID VOLUME FLOW (m3/h)	LIQUID VOLUME FRACTION
Methane	2.2576 *	0.3334 *	0.8692 *	0.1412 *	0.1210 *	0.2258 *
Ethane	1.1838 *	0.1748 *	0.8543 *	0.1388 *	0.1001 *	0.1868 *
Propane	1.4351 *	0.2120 *	1.5188 *	0.2467 *	0.1249 *	0.2331 *
i-Butane	0.2831 *	0.0418 *	0.3950 *	0.0642 *	0.0293 *	0.0547 *
n-Butane	0.5947 *	0.0878 *	0.8295 *	0.1348 *	0.0593 *	0.1106 *
i-Pentane	0.1287 *	0.0190 *	0.2228 *	0.0362 *	0.0149 *	0.0278 *
n-Pentane	0.1372 *	0.0203 *	0.2376 *	0.0386 *	0.0157 *	0.0293 *
n-Hexane	0.1223 *	0.0181 *	0.2530 *	0.0411 *	0.0159 *	0.0297 *
Nitrogen	0.0260 *	0.0038 *	0.0175 *	0.0028 *	0.0009 *	0.0017 *
CO2	0.2597 *	0.0384 *	0.2743 *	0.0446 *	0.0138 *	0.0258 *
H2S	0.0000 *	0.0000 *	0.0000 *	0.0000 *	0.0000 *	0.0000 *
H2O	0.0116 *	0.0017 *	0.0050 *	0.0008 *	0.0002 *	0.0004 *
NBP[1]95*	0.0492 *	0.0073 *	0.0802 *	0.0130 *	0.0049 *	0.0092 *
NBP[1]121*	0.0494 *	0.0073 *	0.0863 *	0.0140 *	0.0052 *	0.0097 *
NBP[1]147*	0.0493 *	0.0073 *	0.0948 *	0.0154 *	0.0056 *	0.0105 *
NBP[1]171*	0.0691 *	0.0102 *	0.1455 *	0.0236 *	0.0085 *	0.0159 *
NBP[1]195*	0.0624 *	0.0092 *	0.1401 *	0.0228 *	0.0081 *	0.0151 *
NBP[1]222*	0.0278 *	0.0041 *	0.0672 *	0.0109 *	0.0038 *	0.0072 *
NBP[1]248*	0.0135 *	0.0020 *	0.0350 *	0.0057 *	0.0020 *	0.0037 *
NBP[1]273*	0.0061 *	0.0009 *	0.0169 *	0.0027 *	0.0009 *	0.0018 *
NBP[1]299*	0.0026 *	0.0004 *	0.0076 *	0.0012 *	0.0004 *	0.0008 *
NBP[1]325*	0.0010 *	0.0001 *	0.0030 *	0.0005 *	0.0002 *	0.0003 *
NBP[1]351*	0.0004 *	0.0001 *	0.0013 *	0.0002 *	0.0001 *	0.0001 *
NBP[1]377*	0.0002 *	0.0000 *	0.0006 *	0.0001 *	0.0000 *	0.0001 *
NBP[1]402*	0.0001 *	0.0000 *	0.0003 *	0.0000 *	0.0000 *	0.0000 *
NBP[1]428*	0.0000 *	0.0000 *	0.0001 *	0.0000 *	0.0000 *	0.0000 *
NBP[1]454*	0.0000 *	0.0000 *	0.0001 *	0.0000 *	0.0000 *	0.0000 *
NBP[1]480*	0.0000 *	0.0000 *	0.0000 *	0.0000 *	0.0000 *	0.0000 *
NBP[1]505*	0.0000 *	0.0000 *	0.0000 *	0.0000 *	0.0000 *	0.0000 *
NBP[1]531*	0.0000 *	0.0000 *	0.0000 *	0.0000 *	0.0000 *	0.0000 *
NBP[1]557*	0.0000 *	0.0000 *	0.0000 *	0.0000 *	0.0000 *	0.0000 *
NBP[1]582*	0.0000 *	0.0000 *	0.0000 *	0.0000 *	0.0000 *	0.0000 *
NBP[1]608*	0.0000 *	0.0000 *	0.0000 *	0.0000 *	0.0000 *	0.0000 *
NBP[1]634*	0.0000 *	0.0000 *	0.0000 *	0.0000 *	0.0000 *	0.0000 *
NBP[1]659*	0.0000 *	0.0000 *	0.0000 *	0.0000 *	0.0000 *	0.0000 *
NBP[1]685*	0.0000 *	0.0000 *	0.0000 *	0.0000 *	0.0000 *	0.0000 *
NBP[1]711*	0.0000 *	0.0000 *	0.0000 *	0.0000 *	0.0000 *	0.0000 *
NBP[1]736*	0.0000 *	0.0000 *	0.0000 *	0.0000 *	0.0000 *	0.0000 *
NBP[1]762*	0.0000 *	0.0000 *	0.0000 *	0.0000 *	0.0000 *	0.0000 *
NBP[1]788*	0.0000 *	0.0000 *	0.0000 *	0.0000 *	0.0000 *	0.0000 *
NBP[1]825*	0.0000 *	0.0000 *	0.0000 *	0.0000 *	0.0000 *	0.0000 *
NBP[1]873*	0.0000 *	0.0000 *	0.0000 *	0.0000 *	0.0000 *	0.0000 *
NBP[1]926*	0.0000 *	0.0000 *	0.0000 *	0.0000 *	0.0000 *	0.0000 *
NBP[1]978*	0.0000 *	0.0000 *	0.0000 *	0.0000 *	0.0000 *	0.0000 *
NBP[1]1021*	0.0000 *	0.0000 *	0.0000 *	0.0000 *	0.0000 *	0.0000 *
NBP[1]1075*	0.0000 *	0.0000 *	0.0000 *	0.0000 *	0.0000 *	0.0000 *
NBP[1]1123*	0.0000 *	0.0000 *	0.0000 *	0.0000 *	0.0000 *	0.0000 *
NBP[1]1173*	0.0000 *	0.0000 *	0.0000 *	0.0000 *	0.0000 *	0.0000 *
NBP[1]1250*	0.0000 *	0.0000 *	0.0000 *	0.0000 *	0.0000 *	0.0000 *
NBP[1]1339*	0.0000 *	0.0000 *	0.0000 *	0.0000 *	0.0000 *	0.0000 *
NBP[1]1432*	0.0000 *	0.0000 *	0.0000 *	0.0000 *	0.0000 *	0.0000 *
NBP[1]1528*	0.0000 *	0.0000 *	0.0000 *	0.0000 *	0.0000 *	0.0000 *
NBP[1]1637*	0.0000 *	0.0000 *	0.0000 *	0.0000 *	0.0000 *	0.0000 *
NBP[1]1732*	0.0000 *	0.0000 *	0.0000 *	0.0000 *	0.0000 *	0.0000 *

Licensed to: PETROCHEMICAL ENGINEERIN
* Specified by user.

Material Stream: FLASH-G (continued)

Fluid Package: Basis-1
Property Package: Peng-Robinson

COMPOSITION

Overall Phase (continued)

Vapour Fraction ---

COMPONENTS	MOLAR FLOW (kgmole/h)	MOLE FRACTION	MASS FLOW (tonne/d)	MASS FRACTION	LIQUID VOLUME FLOW (m3/h)	LIQUID VOLUME FRACTION
NBP[1]1819*	0.0000 *	0.0000 *	0.0000 *	0.0000 *	0.0000 *	0.0000 *
NBP[1]1913*	0.0000 *	0.0000 *	0.0000 *	0.0000 *	0.0000 *	0.0000 *
Total	6.7707	1.0000	6.1561	1.0000	0.5358	1.0000

Material Stream: Gas-PRD

Fluid Package: Basis-1
Property Package: Peng-Robinson

CONDITIONS

		Overall
Vapour / Phase Fraction		---
Temperature:	(F)	---
Pressure:	(psig)	450.0 *
Molar Flow	(MMSCFD)	5.400 *
Mass Flow	(tonne/d)	139.4
Std Ideal Liq Vol Flow	(barrel/day)	2425
Molar Enthalpy	(kJ/kgmole)	---
Molar Entropy	(kJ/kgmole-C)	---
Heat Flow	(MMBtu/hr)	---
Liq Vol Flow @Std Cond	(barrel/day)	9.561e+005 *

PROPERTIES

		Overall
Molecular Weight		21.60
Molar Density	(kgmole/m3)	---
Mass Density	(kg/m3)	---
Act. Volume Flow	(barrel/day)	---
Mass Enthalpy	(kJ/kg)	---
Mass Entropy	(kJ/kg-C)	---
Heat Capacity	(kJ/kgmole-C)	---
Mass Heat Capacity	(kJ/kg-C)	---
LHV Molar Basis (Std)	(Btu/SCF)	1078
LHV Mass Basis (Std)	(kJ/kg)	4.406e+004
Phase Fraction [Vol. Basis]		0.0000
Phase Fraction [Mass Basis]		0.0000
Partial Pressure of CO2	(psig)	-14.70
Cost Based on Flow	(Cost/s)	0.0000
Act. Gas Flow	(ACT_m3/h)	---
Avg. Liq. Density	(kgmole/m3)	16.75
Specific Heat	(kJ/kgmole-C)	---
Std. Gas Flow	(STD_m3/h)	6359
Std. Ideal Liq. Mass Density	(kg/m3)	361.7
Act. Liq. Flow	(barrel/day)	---
Z Factor		---
Watson K		17.22
User Property		---
Partial Pressure of H2S	(psig)	-14.70
Cp/(Cp - R)		---
Cp/Cv		---
Heat of Vap.	(kJ/kgmole)	---
Kinematic Viscosity	(cSt)	---
Liq. Mass Density (Std. Cond)	(kg/m3)	0.9172
Liq. Vol. Flow (Std. Cond)	(barrel/day)	9.561e+005
Liquid Fraction		---
Molar Volume	(m3/kgmole)	---

* Specified by user.

Material Stream: Gas-PRD (continued)

Fluid Package: Basis-1
Property Package: Peng-Robinson

PROPERTIES

		Overall				
Mass Heat of Vap.	(kJ/kg)	---				
Phase Fraction [Molar Basis]		---				
Surface Tension	(dyne/cm)	---				
Thermal Conductivity	(W/m-K)	---				
Viscosity	(cP)	---				
Cv (Semi-Ideal)	(kJ/kgmole-C)	---				
Mass Cv (Semi-Ideal)	(kJ/kg-C)	---				
Cv	(kJ/kgmole-C)	---				
Mass Cv	(kJ/kg-C)	---				
Cv (Ent. Method)	(kJ/kgmole-C)	---				
Mass Cv (Ent. Method)	(kJ/kg-C)	---				
Cp/Cv (Ent. Method)		---				
Reid VP at 37.8 C	(psig)	---				
True VP at 37.8 C	(psig)	---				
Liq. Vol. Flow - Sum(Std. Cond)	(barrel/day)	0.0000				
HHV Molar Basis (Std)	(Btu/SCF)	1181				
HHV Mass Basis (Std)	(kJ/kg)	4.824e+004				
CO2 Loading		---				
CO2 App ML Con	(kgmole/m3)	---				
CO2 App WT Con	(kgmol/kg)	1.576e-003				
Phase Fraction [Act. Vol. Basis]		0.0000				
Mass Exergy	(kJ/kg)	9.743e+006				
Viscosity Index		---				
Ideal Gas Cp/Cv		1.000				
Ideal Gas Cp	(kJ/kgmole-C)	8.446e+007				
Mass Ideal Gas Cp	(kJ/kg-C)	3.911e+006				
Bubble Point Pressure	(psig)	---				

COMPOSITION

Overall Phase

Vapour Fraction ---

COMPONENTS	MOLAR FLOW (kgmole/h)	MOLE FRACTION	MASS FLOW (tonne/d)	MASS FRACTION	LIQUID VOLUME FLOW (m3/h)	LIQUID VOLUME FRACTION
Methane	204.7864 *	0.7614 *	78.8488 *	0.5656 *	10.9734 *	0.6832 *
Ethane	27.6169 *	0.1027 *	19.9305 *	0.1430 *	2.3348 *	0.1454 *
Propane	13.8326 *	0.0514 *	14.6395 *	0.1050 *	1.2039 *	0.0750 *
i-Butane	1.7456 *	0.0065 *	2.4350 *	0.0175 *	0.1805 *	0.0112 *
n-Butane	3.3566 *	0.0125 *	4.6824 *	0.0336 *	0.3345 *	0.0208 *
i-Pentane	0.7208 *	0.0027 *	1.2482 *	0.0090 *	0.0834 *	0.0052 *
n-Pentane	0.8230 *	0.0031 *	1.4252 *	0.0102 *	0.0943 *	0.0059 *
n-Hexane	1.3475 *	0.0050 *	2.7870 *	0.0200 *	0.1752 *	0.0109 *
Nitrogen	5.5729 *	0.0207 *	3.7467 *	0.0269 *	0.1936 *	0.0121 *
CO2	9.1554 *	0.0340 *	9.6702 *	0.0694 *	0.4882 *	0.0304 *
H2S	0.0005 *	0.0000 *	0.0004 *	0.0000 *	0.0000 *	0.0000 *
H2O	0.0000 *	0.0000 *	0.0000 *	0.0000 *	0.0000 *	0.0000 *
NBP[1]95*	0.0000 *	0.0000 *	0.0000 *	0.0000 *	0.0000 *	0.0000 *
NBP[1]121*	0.0000 *	0.0000 *	0.0000 *	0.0000 *	0.0000 *	0.0000 *
NBP[1]147*	0.0000 *	0.0000 *	0.0000 *	0.0000 *	0.0000 *	0.0000 *
NBP[1]171*	0.0000 *	0.0000 *	0.0000 *	0.0000 *	0.0000 *	0.0000 *
NBP[1]195*	0.0000 *	0.0000 *	0.0000 *	0.0000 *	0.0000 *	0.0000 *
NBP[1]222*	0.0000 *	0.0000 *	0.0000 *	0.0000 *	0.0000 *	0.0000 *
NBP[1]248*	0.0000 *	0.0000 *	0.0000 *	0.0000 *	0.0000 *	0.0000 *
NBP[1]273*	0.0000 *	0.0000 *	0.0000 *	0.0000 *	0.0000 *	0.0000 *
NBP[1]299*	0.0000 *	0.0000 *	0.0000 *	0.0000 *	0.0000 *	0.0000 *
NBP[1]325*	0.0000 *	0.0000 *	0.0000 *	0.0000 *	0.0000 *	0.0000 *
NBP[1]351*	0.0000 *	0.0000 *	0.0000 *	0.0000 *	0.0000 *	0.0000 *
NBP[1]377*	0.0000 *	0.0000 *	0.0000 *	0.0000 *	0.0000 *	0.0000 *

* Specified by user.

Material Stream: Gas-PRD (continued)

Fluid Package: Basis-1
Property Package: Peng-Robinson

COMPOSITION

Overall Phase (continued)

Vapour Fraction ---

COMPONENTS	MOLAR FLOW (kgmole/h)	MOLE FRACTION	MASS FLOW (tonne/d)	MASS FRACTION	LIQUID VOLUME FLOW (m3/h)	LIQUID VOLUME FRACTION
NBP[1]402*	0.0000 *	0.0000 *	0.0000 *	0.0000 *	0.0000 *	0.0000 *
NBP[1]428*	0.0000 *	0.0000 *	0.0000 *	0.0000 *	0.0000 *	0.0000 *
NBP[1]454*	0.0000 *	0.0000 *	0.0000 *	0.0000 *	0.0000 *	0.0000 *
NBP[1]480*	0.0000 *	0.0000 *	0.0000 *	0.0000 *	0.0000 *	0.0000 *
NBP[1]505*	0.0000 *	0.0000 *	0.0000 *	0.0000 *	0.0000 *	0.0000 *
NBP[1]531*	0.0000 *	0.0000 *	0.0000 *	0.0000 *	0.0000 *	0.0000 *
NBP[1]557*	0.0000 *	0.0000 *	0.0000 *	0.0000 *	0.0000 *	0.0000 *
NBP[1]582*	0.0000 *	0.0000 *	0.0000 *	0.0000 *	0.0000 *	0.0000 *
NBP[1]608*	0.0000 *	0.0000 *	0.0000 *	0.0000 *	0.0000 *	0.0000 *
NBP[1]634*	0.0000 *	0.0000 *	0.0000 *	0.0000 *	0.0000 *	0.0000 *
NBP[1]659*	0.0000 *	0.0000 *	0.0000 *	0.0000 *	0.0000 *	0.0000 *
NBP[1]685*	0.0000 *	0.0000 *	0.0000 *	0.0000 *	0.0000 *	0.0000 *
NBP[1]711*	0.0000 *	0.0000 *	0.0000 *	0.0000 *	0.0000 *	0.0000 *
NBP[1]736*	0.0000 *	0.0000 *	0.0000 *	0.0000 *	0.0000 *	0.0000 *
NBP[1]762*	0.0000 *	0.0000 *	0.0000 *	0.0000 *	0.0000 *	0.0000 *
NBP[1]788*	0.0000 *	0.0000 *	0.0000 *	0.0000 *	0.0000 *	0.0000 *
NBP[1]825*	0.0000 *	0.0000 *	0.0000 *	0.0000 *	0.0000 *	0.0000 *
NBP[1]873*	0.0000 *	0.0000 *	0.0000 *	0.0000 *	0.0000 *	0.0000 *
NBP[1]926*	0.0000 *	0.0000 *	0.0000 *	0.0000 *	0.0000 *	0.0000 *
NBP[1]978*	0.0000 *	0.0000 *	0.0000 *	0.0000 *	0.0000 *	0.0000 *
NBP[1]1021*	0.0000 *	0.0000 *	0.0000 *	0.0000 *	0.0000 *	0.0000 *
NBP[1]1075*	0.0000 *	0.0000 *	0.0000 *	0.0000 *	0.0000 *	0.0000 *
NBP[1]1123*	0.0000 *	0.0000 *	0.0000 *	0.0000 *	0.0000 *	0.0000 *
NBP[1]1173*	0.0000 *	0.0000 *	0.0000 *	0.0000 *	0.0000 *	0.0000 *
NBP[1]1250*	0.0000 *	0.0000 *	0.0000 *	0.0000 *	0.0000 *	0.0000 *
NBP[1]1339*	0.0000 *	0.0000 *	0.0000 *	0.0000 *	0.0000 *	0.0000 *
NBP[1]1432*	0.0000 *	0.0000 *	0.0000 *	0.0000 *	0.0000 *	0.0000 *
NBP[1]1528*	0.0000 *	0.0000 *	0.0000 *	0.0000 *	0.0000 *	0.0000 *
NBP[1]1637*	0.0000 *	0.0000 *	0.0000 *	0.0000 *	0.0000 *	0.0000 *
NBP[1]1732*	0.0000 *	0.0000 *	0.0000 *	0.0000 *	0.0000 *	0.0000 *
NBP[1]1819*	0.0000 *	0.0000 *	0.0000 *	0.0000 *	0.0000 *	0.0000 *
NBP[1]1913*	0.0000 *	0.0000 *	0.0000 *	0.0000 *	0.0000 *	0.0000 *
Total	268.9582	1.0000	139.4139	1.0000	16.0619	1.0000

Material Stream: Pandhi

Fluid Package: Basis-1
Property Package: Peng-Robinson

CONDITIONS

		Overall	Vapour Phase	Liquid Phase	Aqueous Phase
Vapour / Phase Fraction		0.6833	0.6833	0.0455	0.2712
Temperature:	(F)	85.00 *	85.00	85.00	85.00
Pressure:	(psig)	450.0 *	450.0	450.0	450.0
Molar Flow	(MMSCFD)	7.874	5.380	0.3586	2.135
Mass Flow	(tonne/d)	237.5	137.5	54.03	46.00
Std Ideal Liq Vol Flow	(barrel/day)	3142	2402	450.0	290.0
Molar Enthalpy	(kJ/kgmole)	-1.516e+005	-8.928e+004	-2.868e+005	-2.859e+005
Molar Entropy	(kJ/kgmole-C)	133.6	159.2	218.5	54.86
Heat Flow	(MMBtu/hr)	-56.34	-22.68	-4.856	-28.81
Liq Vol Flow @Std Cond	(barrel/day)	2.954e+005 *	9.526e+005	434.8	285.1

PROPERTIES

		Overall	Vapour Phase	Liquid Phase	Aqueous Phase
Molecular Weight		25.24	21.38	126.0	18.03
Molar Density	(kgmole/m3)	2.032	1.424	6.091	55.76

* Specified by user.

Material Stream: Pandhi (continued)

Fluid Package: Basis-1
Property Package: Peng-Robinson

PROPERTIES

	Overall	Vapour Phase	Liquid Phase	Aqueous Phase
Mass Density (kg/m3)	51.28	30.45	767.6	1005
Act. Volume Flow (barrel/day)	2.914e+004	2.841e+004	442.7	287.9
Mass Enthalpy (kJ/kg)	-6006	-4175	-2276	-1.586e+004
Mass Entropy (kJ/kg-C)	5.293	7.444	1.734	3.043
Heat Capacity (kJ/kgmole-C)	64.84	47.20	253.3	77.64
Mass Heat Capacity (kJ/kg-C)	2.569	2.207	2.010	4.307
LHV Molar Basis (Std) (Btu/SCF)	---	---	---	1.835e-004
LHV Mass Basis (Std) (kJ/kg)	---	---	---	8.987e-003
Phase Fraction [Vol. Basis]	0.7645	0.7645	0.1432	9.229e-002
Phase Fraction [Mass Basis]	0.5789	0.5789	0.2274	0.1937
Partial Pressure of CO2 (psig)	1.138	---	---	---
Cost Based on Flow (Cost/s)	0.0000	0.0000	0.0000	0.0000
Act. Gas Flow (ACT_m3/h)	188.2	188.2	---	---
Avg. Liq. Density (kgmole/m3)	18.84	16.84	5.992	55.35
Specific Heat (kJ/kgmole-C)	64.84	47.20	253.3	77.64
Std. Gas Flow (STD_m3/h)	9272	6336	422.3	2514
Std. Ideal Liq. Mass Density (kg/m3)	475.5	360.1	755.2	997.8
Act. Liq. Flow (barrel/day)	730.6	---	442.7	287.9
Z Factor	---	0.8944	0.2091	2.284e-002
Watson K	15.58	17.28	11.99	8.497
User Property	---	---	---	---
Partial Pressure of H2S (psig)	-14.70	---	---	---
Cp/(Cp - R)	1.147	1.214	1.034	1.120
Cp/Cv	1.164	1.389	1.034	1.149
Heat of Vap. (kJ/kgmole)	6.864e+004	---	---	---
Kinematic Viscosity (cSt)	---	0.3953	11.77	0.8027
Liq. Mass Density (Std. Cond) (kg/m3)	5.058	0.9080	781.4	1015
Liq. Vol. Flow (Std. Cond) (barrel/day)	2.954e+005	9.526e+005	434.8	285.1
Liquid Fraction	0.3167	0.0000	1.000	1.000
Molar Volume (m3/kgmole)	0.4922	0.7023	0.1642	1.793e-002
Mass Heat of Vap. (kJ/kg)	2720	---	---	---
Phase Fraction [Molar Basis]	0.6833	0.6833	0.0455	0.2712
Surface Tension (dyne/cm)	---	---	15.90	71.30
Thermal Conductivity (W/m-K)	---	3.307e-002	0.1005	0.6175
Viscosity (cP)	---	1.204e-002	9.037	0.8068
Cv (Semi-Ideal) (kJ/kgmole-C)	56.53	38.88	245.0	69.33
Mass Cv (Semi-Ideal) (kJ/kg-C)	2.240	1.818	1.944	3.846
Cv (kJ/kgmole-C)	55.70	33.97	245.0	67.55
Mass Cv (kJ/kg-C)	2.207	1.589	1.944	3.748
Cv (Ent. Method) (kJ/kgmole-C)	---	-3703	---	67.05
Mass Cv (Ent. Method) (kJ/kg-C)	---	-173.2	---	3.720
Cp/Cv (Ent. Method)	---	-1.275e-002	---	1.158
Reid VP at 37.8 C (psig)	3319	---	98.95	---
True VP at 37.8 C (psig)	6318	4184	480.8	17.45
Liq. Vol. Flow - Sum(Std. Cond) (barrel/day)	9.533e+005	9.526e+005	434.8	285.1
HHV Molar Basis (Std) (Btu/SCF)	---	---	---	46.45
HHV Mass Basis (Std) (kJ/kg)	---	---	---	2274
CO2 Loading	---	---	---	---
CO2 App ML Con (kgmole/m3)	---	---	8.249e-002	2.230e-002
CO2 App WT Con (kgmol/kg)	---	---	1.075e-004	2.219e-005
Phase Fraction [Act. Vol. Basis]	0.9749	0.9749	1.519e-002	9.880e-003
Mass Exergy (kJ/kg)	234.0	---	---	---
Viscosity Index	-12.15	---	---	---
Ideal Gas Cp/Cv	1.217	1.249	1.043	1.329
Ideal Gas Cp (kJ/kgmole-C)	46.72	41.73	199.6	33.60
Mass Ideal Gas Cp (kJ/kg-C)	1.851	1.951	1.584	1.864
Bubble Point Pressure (psig)	6241	---	---	---

Licensed to: PETROCHEMICAL ENGINEERIN
* Specified by user.

Material Stream: Pandhi (continued)

Fluid Package: Basis-1
Property Package: Peng-Robinson

COMPOSITION

Overall Phase

Vapour Fraction 0.6833

COMPONENTS	MOLAR FLOW (kgmole/h)	MOLE FRACTION	MASS FLOW (tonne/d)	MASS FRACTION	LIQUID VOLUME FLOW (m3/h)	LIQUID VOLUME FRACTION
Methane	207.0440	0.5280	79.7181	0.3356	11.0944	0.5330
Ethane	28.8006	0.0734	20.7848	0.0875	2.4348	0.1170
Propane	15.2677	0.0389	16.1583	0.0680	1.3288	0.0638
i-Butane	2.0287	0.0052	2.8300	0.0119	0.2098	0.0101
n-Butane	3.9513	0.0101	5.5120	0.0232	0.3938	0.0189
i-Pentane	0.8495	0.0022	1.4710	0.0062	0.0983	0.0047
n-Pentane	0.9602	0.0024	1.6627	0.0070	0.1100	0.0053
n-Hexane	1.4698	0.0037	3.0399	0.0128	0.1911	0.0092
Nitrogen	5.5989	0.0143	3.7642	0.0158	0.1945	0.0093
CO2	9.4151	0.0240	9.9445	0.0419	0.5020	0.0241
H2S	0.0006	0.0000	0.0005	0.0000	0.0000	0.0000
H2O	106.6990	0.2721	46.1326	0.1942	1.9261	0.0925
NBP[1]95*	0.2883	0.0007	0.4699	0.0020	0.0288	0.0014
NBP[1]121*	0.3381	0.0009	0.5912	0.0025	0.0358	0.0017
NBP[1]147*	0.4314	0.0011	0.8304	0.0035	0.0494	0.0024
NBP[1]171*	0.8224	0.0021	1.7306	0.0073	0.1013	0.0049
NBP[1]195*	1.0758	0.0027	2.4160	0.0102	0.1398	0.0067
NBP[1]222*	0.8003	0.0020	1.9331	0.0081	0.1105	0.0053
NBP[1]248*	0.6657	0.0017	1.7287	0.0073	0.0976	0.0047
NBP[1]273*	0.5358	0.0014	1.4881	0.0063	0.0831	0.0040
NBP[1]299*	0.4185	0.0011	1.2393	0.0052	0.0684	0.0033
NBP[1]325*	0.3029	0.0008	0.9528	0.0040	0.0521	0.0025
NBP[1]351*	0.2456	0.0006	0.8214	0.0035	0.0445	0.0021
NBP[1]377*	0.2247	0.0006	0.8014	0.0034	0.0429	0.0021
NBP[1]402*	0.2061	0.0005	0.7838	0.0033	0.0416	0.0020
NBP[1]428*	0.1961	0.0005	0.7956	0.0033	0.0418	0.0020
NBP[1]454*	0.1956	0.0005	0.8480	0.0036	0.0441	0.0021
NBP[1]480*	0.1982	0.0005	0.9182	0.0039	0.0473	0.0023
NBP[1]505*	0.1920	0.0005	0.9484	0.0040	0.0484	0.0023
NBP[1]531*	0.1852	0.0005	0.9740	0.0041	0.0492	0.0024
NBP[1]557*	0.1784	0.0005	0.9978	0.0042	0.0500	0.0024
NBP[1]582*	0.1706	0.0004	1.0132	0.0043	0.0503	0.0024
NBP[1]608*	0.1643	0.0004	1.0351	0.0044	0.0510	0.0025
NBP[1]634*	0.1611	0.0004	1.0753	0.0045	0.0526	0.0025
NBP[1]659*	0.1586	0.0004	1.1194	0.0047	0.0543	0.0026
NBP[1]685*	0.1641	0.0004	1.2227	0.0051	0.0588	0.0028
NBP[1]711*	0.1715	0.0004	1.3445	0.0057	0.0642	0.0031
NBP[1]736*	0.1697	0.0004	1.3915	0.0059	0.0659	0.0032
NBP[1]762*	0.1653	0.0004	1.4214	0.0060	0.0669	0.0032
NBP[1]788*	0.1585	0.0004	1.4424	0.0061	0.0674	0.0032
NBP[1]825*	0.2655	0.0007	2.5963	0.0109	0.1201	0.0058
NBP[1]873*	0.1830	0.0005	1.9404	0.0082	0.0887	0.0043
NBP[1]926*	0.1437	0.0004	1.6472	0.0069	0.0744	0.0036
NBP[1]978*	0.1474	0.0004	1.8524	0.0078	0.0825	0.0040
NBP[1]1021*	0.0728	0.0002	0.9655	0.0041	0.0426	0.0020
NBP[1]1075*	0.0449	0.0001	0.6310	0.0027	0.0276	0.0013
NBP[1]1123*	0.0417	0.0001	0.6267	0.0026	0.0271	0.0013
NBP[1]1173*	0.0300	0.0001	0.4772	0.0020	0.0205	0.0010
NBP[1]1250*	0.0393	0.0001	0.6767	0.0028	0.0287	0.0014
NBP[1]1339*	0.0364	0.0001	0.6999	0.0029	0.0291	0.0014
NBP[1]1432*	0.0257	0.0001	0.5397	0.0023	0.0221	0.0011
NBP[1]1528*	0.0180	0.0000	0.4082	0.0017	0.0165	0.0008
NBP[1]1637*	0.0127	0.0000	0.3047	0.0013	0.0122	0.0006
NBP[1]1732*	0.0101	0.0000	0.2565	0.0011	0.0101	0.0005

* Specified by user.

Material Stream: Pandhi (continued)

Fluid Package: Basis-1
Property Package: Peng-Robinson

COMPOSITION

Overall Phase (continued)

Vapour Fraction 0.6833

COMPONENTS	MOLAR FLOW (kgmole/h)	MOLE FRACTION	MASS FLOW (tonne/d)	MASS FRACTION	LIQUID VOLUME FLOW (m3/h)	LIQUID VOLUME FRACTION
NBP[1]1819*	0.0097	0.0000	0.2590	0.0011	0.0101	0.0005
NBP[1]1913*	0.0112	0.0000	0.3148	0.0013	0.0121	0.0006
Total	392.1623	1.0000	237.5489	1.0000	20.8162	1.0000

Vapour Phase

Phase Fraction 0.6833

COMPONENTS	MOLAR FLOW (kgmole/h)	MOLE FRACTION	MASS FLOW (tonne/d)	MASS FRACTION	LIQUID VOLUME FLOW (m3/h)	LIQUID VOLUME FRACTION
Methane	204.9954	0.7650	78.9293	0.5739	10.9846	0.6902
Ethane	27.6428	0.1032	19.9492	0.1451	2.3370	0.1468
Propane	13.5786	0.0507	14.3706	0.1045	1.1818	0.0743
i-Butane	1.5846	0.0059	2.2105	0.0161	0.1639	0.0103
n-Butane	2.8799	0.0107	4.0174	0.0292	0.2870	0.0180
i-Pentane	0.4627	0.0017	0.8013	0.0058	0.0536	0.0034
n-Pentane	0.4645	0.0017	0.8044	0.0058	0.0532	0.0033
n-Hexane	0.3692	0.0014	0.7636	0.0056	0.0480	0.0030
Nitrogen	5.5749	0.0208	3.7480	0.0273	0.1937	0.0122
CO2	9.1306	0.0341	9.6441	0.0701	0.4869	0.0306
H2S	0.0005	0.0000	0.0004	0.0000	0.0000	0.0000
H2O	0.3934	0.0015	0.1701	0.0012	0.0071	0.0004
NBP[1]95*	0.1423	0.0005	0.2320	0.0017	0.0142	0.0009
NBP[1]121*	0.1317	0.0005	0.2302	0.0017	0.0139	0.0009
NBP[1]147*	0.1253	0.0005	0.2411	0.0018	0.0143	0.0009
NBP[1]171*	0.1732	0.0006	0.3645	0.0027	0.0213	0.0013
NBP[1]195*	0.1580	0.0006	0.3548	0.0026	0.0205	0.0013
NBP[1]222*	0.0733	0.0003	0.1771	0.0013	0.0101	0.0006
NBP[1]248*	0.0376	0.0001	0.0977	0.0007	0.0055	0.0003
NBP[1]273*	0.0182	0.0001	0.0505	0.0004	0.0028	0.0002
NBP[1]299*	0.0083	0.0000	0.0246	0.0002	0.0014	0.0001
NBP[1]325*	0.0034	0.0000	0.0106	0.0001	0.0006	0.0000
NBP[1]351*	0.0015	0.0000	0.0050	0.0000	0.0003	0.0000
NBP[1]377*	0.0007	0.0000	0.0026	0.0000	0.0001	0.0000
NBP[1]402*	0.0003	0.0000	0.0013	0.0000	0.0001	0.0000
NBP[1]428*	0.0002	0.0000	0.0007	0.0000	0.0000	0.0000
NBP[1]454*	0.0001	0.0000	0.0004	0.0000	0.0000	0.0000
NBP[1]480*	0.0000	0.0000	0.0002	0.0000	0.0000	0.0000
NBP[1]505*	0.0000	0.0000	0.0001	0.0000	0.0000	0.0000
NBP[1]531*	0.0000	0.0000	0.0000	0.0000	0.0000	0.0000
NBP[1]557*	0.0000	0.0000	0.0000	0.0000	0.0000	0.0000
NBP[1]582*	0.0000	0.0000	0.0000	0.0000	0.0000	0.0000
NBP[1]608*	0.0000	0.0000	0.0000	0.0000	0.0000	0.0000
NBP[1]634*	0.0000	0.0000	0.0000	0.0000	0.0000	0.0000
NBP[1]659*	0.0000	0.0000	0.0000	0.0000	0.0000	0.0000
NBP[1]685*	0.0000	0.0000	0.0000	0.0000	0.0000	0.0000
NBP[1]711*	0.0000	0.0000	0.0000	0.0000	0.0000	0.0000
NBP[1]736*	0.0000	0.0000	0.0000	0.0000	0.0000	0.0000
NBP[1]762*	0.0000	0.0000	0.0000	0.0000	0.0000	0.0000
NBP[1]788*	0.0000	0.0000	0.0000	0.0000	0.0000	0.0000
NBP[1]825*	0.0000	0.0000	0.0000	0.0000	0.0000	0.0000
NBP[1]873*	0.0000	0.0000	0.0000	0.0000	0.0000	0.0000
NBP[1]926*	0.0000	0.0000	0.0000	0.0000	0.0000	0.0000
NBP[1]978*	0.0000	0.0000	0.0000	0.0000	0.0000	0.0000
NBP[1]1021*	0.0000	0.0000	0.0000	0.0000	0.0000	0.0000
NBP[1]1075*	0.0000	0.0000	0.0000	0.0000	0.0000	0.0000
NBP[1]1123*	0.0000	0.0000	0.0000	0.0000	0.0000	0.0000

* Specified by user.

Material Stream: Pandhi (continued)

Fluid Package: Basis-1
Property Package: Peng-Robinson

COMPOSITION

Vapour Phase (continued)

Phase Fraction 0.6833

COMPONENTS	MOLAR FLOW (kgmole/h)	MOLE FRACTION	MASS FLOW (tonne/d)	MASS FRACTION	LIQUID VOLUME FLOW (m3/h)	LIQUID VOLUME FRACTION
NBP[1]1173*	0.0000	0.0000	0.0000	0.0000	0.0000	0.0000
NBP[1]1250*	0.0000	0.0000	0.0000	0.0000	0.0000	0.0000
NBP[1]1339*	0.0000	0.0000	0.0000	0.0000	0.0000	0.0000
NBP[1]1432*	0.0000	0.0000	0.0000	0.0000	0.0000	0.0000
NBP[1]1528*	0.0000	0.0000	0.0000	0.0000	0.0000	0.0000
NBP[1]1637*	0.0000	0.0000	0.0000	0.0000	0.0000	0.0000
NBP[1]1732*	0.0000	0.0000	0.0000	0.0000	0.0000	0.0000
NBP[1]1819*	0.0001	0.0000	0.0033	0.0000	0.0001	0.0000
NBP[1]1913*	0.0112	0.0000	0.3148	0.0023	0.0121	0.0008
Total	267.9625	1.0000	137.5201	1.0000	15.9142	1.0000

Liquid Phase

Phase Fraction 4.555e-002

COMPONENTS	MOLAR FLOW (kgmole/h)	MOLE FRACTION	MASS FLOW (tonne/d)	MASS FRACTION	LIQUID VOLUME FLOW (m3/h)	LIQUID VOLUME FRACTION
Methane	2.0486	0.1147	0.7888	0.0146	0.1098	0.0368
Ethane	1.1578	0.0648	0.8356	0.0155	0.0979	0.0328
Propane	1.6892	0.0946	1.7877	0.0331	0.1470	0.0493
i-Butane	0.4441	0.0249	0.6195	0.0115	0.0459	0.0154
n-Butane	1.0714	0.0600	1.4946	0.0277	0.1068	0.0358
i-Pentane	0.3868	0.0217	0.6697	0.0124	0.0448	0.0150
n-Pentane	0.4957	0.0278	0.8584	0.0159	0.0568	0.0191
n-Hexane	1.1006	0.0616	2.2764	0.0421	0.1431	0.0480
Nitrogen	0.0232	0.0013	0.0156	0.0003	0.0008	0.0003
CO2	0.2419	0.0135	0.2555	0.0047	0.0129	0.0043
H2S	0.0000	0.0000	0.0000	0.0000	0.0000	0.0000
H2O	0.0108	0.0006	0.0047	0.0001	0.0002	0.0001
NBP[1]95*	0.1460	0.0082	0.2380	0.0044	0.0146	0.0049
NBP[1]121*	0.2065	0.0116	0.3610	0.0067	0.0218	0.0073
NBP[1]147*	0.3062	0.0171	0.5893	0.0109	0.0350	0.0118
NBP[1]171*	0.6492	0.0363	1.3661	0.0253	0.0800	0.0268
NBP[1]195*	0.9178	0.0514	2.0612	0.0382	0.1193	0.0400
NBP[1]222*	0.7270	0.0407	1.7560	0.0325	0.1004	0.0337
NBP[1]248*	0.6280	0.0352	1.6311	0.0302	0.0921	0.0309
NBP[1]273*	0.5176	0.0290	1.4376	0.0266	0.0803	0.0269
NBP[1]299*	0.4102	0.0230	1.2147	0.0225	0.0671	0.0225
NBP[1]325*	0.2995	0.0168	0.9422	0.0174	0.0515	0.0173
NBP[1]351*	0.2441	0.0137	0.8164	0.0151	0.0442	0.0148
NBP[1]377*	0.2240	0.0125	0.7988	0.0148	0.0428	0.0144
NBP[1]402*	0.2058	0.0115	0.7825	0.0145	0.0415	0.0139
NBP[1]428*	0.1959	0.0110	0.7949	0.0147	0.0417	0.0140
NBP[1]454*	0.1955	0.0109	0.8477	0.0157	0.0441	0.0148
NBP[1]480*	0.1981	0.0111	0.9180	0.0170	0.0473	0.0159
NBP[1]505*	0.1920	0.0107	0.9483	0.0176	0.0484	0.0162
NBP[1]531*	0.1852	0.0104	0.9740	0.0180	0.0492	0.0165
NBP[1]557*	0.1784	0.0100	0.9978	0.0185	0.0500	0.0168
NBP[1]582*	0.1706	0.0095	1.0132	0.0188	0.0503	0.0169
NBP[1]608*	0.1643	0.0092	1.0351	0.0192	0.0510	0.0171
NBP[1]634*	0.1611	0.0090	1.0753	0.0199	0.0526	0.0176
NBP[1]659*	0.1586	0.0089	1.1194	0.0207	0.0543	0.0182
NBP[1]685*	0.1641	0.0092	1.2227	0.0226	0.0588	0.0197
NBP[1]711*	0.1715	0.0096	1.3445	0.0249	0.0642	0.0215
NBP[1]736*	0.1697	0.0095	1.3915	0.0258	0.0659	0.0221
NBP[1]762*	0.1653	0.0093	1.4214	0.0263	0.0669	0.0224
NBP[1]788*	0.1585	0.0089	1.4424	0.0267	0.0674	0.0226

* Specified by user.

Material Stream: Pandhi (continued)

Fluid Package: Basis-1
Property Package: Peng-Robinson

COMPOSITION

Liquid Phase (continued)

Phase Fraction 4.555e-002

COMPONENTS	MOLAR FLOW (kgmole/h)	MOLE FRACTION	MASS FLOW (tonne/d)	MASS FRACTION	LIQUID VOLUME FLOW (m3/h)	LIQUID VOLUME FRACTION
NBP[1]825*	0.2655	0.0149	2.5963	0.0481	0.1201	0.0403
NBP[1]873*	0.1830	0.0102	1.9404	0.0359	0.0887	0.0298
NBP[1]926*	0.1437	0.0080	1.6472	0.0305	0.0744	0.0250
NBP[1]978*	0.1474	0.0082	1.8524	0.0343	0.0825	0.0277
NBP[1]1021*	0.0728	0.0041	0.9655	0.0179	0.0426	0.0143
NBP[1]1075*	0.0449	0.0025	0.6310	0.0117	0.0276	0.0093
NBP[1]1123*	0.0417	0.0023	0.6267	0.0116	0.0271	0.0091
NBP[1]1173*	0.0300	0.0017	0.4772	0.0088	0.0205	0.0069
NBP[1]1250*	0.0393	0.0022	0.6767	0.0125	0.0287	0.0096
NBP[1]1339*	0.0364	0.0020	0.6999	0.0130	0.0291	0.0098
NBP[1]1432*	0.0257	0.0014	0.5397	0.0100	0.0221	0.0074
NBP[1]1528*	0.0180	0.0010	0.4082	0.0076	0.0165	0.0055
NBP[1]1637*	0.0127	0.0007	0.3047	0.0056	0.0122	0.0041
NBP[1]1732*	0.0101	0.0006	0.2565	0.0047	0.0101	0.0034
NBP[1]1819*	0.0096	0.0005	0.2557	0.0047	0.0100	0.0033
NBP[1]1913*	0.0000	0.0000	0.0000	0.0000	0.0000	0.0000
Total	17.8617	1.0000	54.0255	1.0000	2.9809	1.0000

Aqueous Phase

Phase Fraction 0.2712

COMPONENTS	MOLAR FLOW (kgmole/h)	MOLE FRACTION	MASS FLOW (tonne/d)	MASS FRACTION	LIQUID VOLUME FLOW (m3/h)	LIQUID VOLUME FRACTION
Methane	0.0000	0.0000	0.0000	0.0000	0.0000	0.0000
Ethane	0.0000	0.0000	0.0000	0.0000	0.0000	0.0000
Propane	0.0000	0.0000	0.0000	0.0000	0.0000	0.0000
i-Butane	0.0000	0.0000	0.0000	0.0000	0.0000	0.0000
n-Butane	0.0000	0.0000	0.0000	0.0000	0.0000	0.0000
i-Pentane	0.0000	0.0000	0.0000	0.0000	0.0000	0.0000
n-Pentane	0.0000	0.0000	0.0000	0.0000	0.0000	0.0000
n-Hexane	0.0000	0.0000	0.0000	0.0000	0.0000	0.0000
Nitrogen	0.0008	0.0000	0.0006	0.0000	0.0000	0.0000
CO2	0.0425	0.0004	0.0449	0.0010	0.0023	0.0012
H2S	0.0000	0.0000	0.0000	0.0000	0.0000	0.0000
H2O	106.2948	0.9996	45.9579	0.9990	1.9188	0.9988
NBP[1]95*	0.0000	0.0000	0.0000	0.0000	0.0000	0.0000
NBP[1]121*	0.0000	0.0000	0.0000	0.0000	0.0000	0.0000
NBP[1]147*	0.0000	0.0000	0.0000	0.0000	0.0000	0.0000
NBP[1]171*	0.0000	0.0000	0.0000	0.0000	0.0000	0.0000
NBP[1]195*	0.0000	0.0000	0.0000	0.0000	0.0000	0.0000
NBP[1]222*	0.0000	0.0000	0.0000	0.0000	0.0000	0.0000
NBP[1]248*	0.0000	0.0000	0.0000	0.0000	0.0000	0.0000
NBP[1]273*	0.0000	0.0000	0.0000	0.0000	0.0000	0.0000
NBP[1]299*	0.0000	0.0000	0.0000	0.0000	0.0000	0.0000
NBP[1]325*	0.0000	0.0000	0.0000	0.0000	0.0000	0.0000
NBP[1]351*	0.0000	0.0000	0.0000	0.0000	0.0000	0.0000
NBP[1]377*	0.0000	0.0000	0.0000	0.0000	0.0000	0.0000
NBP[1]402*	0.0000	0.0000	0.0000	0.0000	0.0000	0.0000
NBP[1]428*	0.0000	0.0000	0.0000	0.0000	0.0000	0.0000
NBP[1]454*	0.0000	0.0000	0.0000	0.0000	0.0000	0.0000
NBP[1]480*	0.0000	0.0000	0.0000	0.0000	0.0000	0.0000
NBP[1]505*	0.0000	0.0000	0.0000	0.0000	0.0000	0.0000
NBP[1]531*	0.0000	0.0000	0.0000	0.0000	0.0000	0.0000
NBP[1]557*	0.0000	0.0000	0.0000	0.0000	0.0000	0.0000
NBP[1]582*	0.0000	0.0000	0.0000	0.0000	0.0000	0.0000
NBP[1]608*	0.0000	0.0000	0.0000	0.0000	0.0000	0.0000

* Specified by user.

Material Stream: Pandhi (continued)

Fluid Package: Basis-1
Property Package: Peng-Robinson

COMPOSITION

Aqueous Phase (continued)

Phase Fraction 0.2712

COMPONENTS	MOLAR FLOW (kgmole/h)	MOLE FRACTION	MASS FLOW (tonne/d)	MASS FRACTION	LIQUID VOLUME FLOW (m3/h)	LIQUID VOLUME FRACTION
NBP[1]634*	0.0000	0.0000	0.0000	0.0000	0.0000	0.0000
NBP[1]659*	0.0000	0.0000	0.0000	0.0000	0.0000	0.0000
NBP[1]685*	0.0000	0.0000	0.0000	0.0000	0.0000	0.0000
NBP[1]711*	0.0000	0.0000	0.0000	0.0000	0.0000	0.0000
NBP[1]736*	0.0000	0.0000	0.0000	0.0000	0.0000	0.0000
NBP[1]762*	0.0000	0.0000	0.0000	0.0000	0.0000	0.0000
NBP[1]788*	0.0000	0.0000	0.0000	0.0000	0.0000	0.0000
NBP[1]825*	0.0000	0.0000	0.0000	0.0000	0.0000	0.0000
NBP[1]873*	0.0000	0.0000	0.0000	0.0000	0.0000	0.0000
NBP[1]926*	0.0000	0.0000	0.0000	0.0000	0.0000	0.0000
NBP[1]978*	0.0000	0.0000	0.0000	0.0000	0.0000	0.0000
NBP[1]1021*	0.0000	0.0000	0.0000	0.0000	0.0000	0.0000
NBP[1]1075*	0.0000	0.0000	0.0000	0.0000	0.0000	0.0000
NBP[1]1123*	0.0000	0.0000	0.0000	0.0000	0.0000	0.0000
NBP[1]1173*	0.0000	0.0000	0.0000	0.0000	0.0000	0.0000
NBP[1]1250*	0.0000	0.0000	0.0000	0.0000	0.0000	0.0000
NBP[1]1339*	0.0000	0.0000	0.0000	0.0000	0.0000	0.0000
NBP[1]1432*	0.0000	0.0000	0.0000	0.0000	0.0000	0.0000
NBP[1]1528*	0.0000	0.0000	0.0000	0.0000	0.0000	0.0000
NBP[1]1637*	0.0000	0.0000	0.0000	0.0000	0.0000	0.0000
NBP[1]1732*	0.0000	0.0000	0.0000	0.0000	0.0000	0.0000
NBP[1]1819*	0.0000	0.0000	0.0000	0.0000	0.0000	0.0000
NBP[1]1913*	0.0000	0.0000	0.0000	0.0000	0.0000	0.0000
Total	106.3381	1.0000	46.0033	1.0000	1.9211	1.0000

Material Stream: PANDHI oil

Fluid Package: Basis-1
Property Package: Peng-Robinson

CONDITIONS

		Overall
Vapour / Phase Fraction		---
Temperature:	(F)	---
Pressure:	(psig)	450.0 *
Molar Flow	(MMSCFD)	0.1957
Mass Flow	(tonne/d)	45.85
Std Ideal Liq Vol Flow	(barrel/day)	346.1
Molar Enthalpy	(kJ/kgmole)	---
Molar Entropy	(kJ/kgmole-C)	---
Heat Flow	(MMBtu/hr)	---
Liq Vol Flow @Std Cond	(barrel/day)	346.1 *

PROPERTIES

		Overall
Molecular Weight		196.0
Molar Density	(kgmole/m3)	---
Mass Density	(kg/m3)	---
Act. Volume Flow	(barrel/day)	---
Mass Enthalpy	(kJ/kg)	---
Mass Entropy	(kJ/kg-C)	---
Heat Capacity	(kJ/kgmole-C)	---
Mass Heat Capacity	(kJ/kg-C)	---
LHV Molar Basis (Std)	(Btu/SCF)	---
LHV Mass Basis (Std)	(kJ/kg)	---
Phase Fraction [Vol. Basis]		0.0000

* Specified by user.

Material Stream: PANDHI oil (continued)

Fluid Package: Basis-1
Property Package: Peng-Robinson

PROPERTIES

	Overall
Phase Fraction [Mass Basis]	0.0000
Partial Pressure of CO2 (psig)	-14.70
Cost Based on Flow (Cost/s)	0.0000
Act. Gas Flow (ACT_m3/h)	---
Avg. Liq. Density (kgmole/m3)	4.251
Specific Heat (kJ/kgmole-C)	---
Std. Gas Flow (STD_m3/h)	230.4
Std. Ideal Liq. Mass Density (kg/m3)	833.3
Act. Liq. Flow (barrel/day)	---
Z Factor	---
Watson K	11.77
User Property	---
Partial Pressure of H2S (psig)	-14.70
Cp/(Cp - R)	---
Cp/Cv	---
Heat of Vap. (kJ/kgmole)	---
Kinematic Viscosity (cSt)	---
Liq. Mass Density (Std. Cond) (kg/m3)	833.3
Liq. Vol. Flow (Std. Cond) (barrel/day)	346.1
Liquid Fraction	---
Molar Volume (m3/kgmole)	---
Mass Heat of Vap. (kJ/kg)	---
Phase Fraction [Molar Basis]	---
Surface Tension (dyne/cm)	---
Thermal Conductivity (W/m-K)	---
Viscosity (cP)	---
Cv (Semi-Ideal) (kJ/kgmole-C)	---
Mass Cv (Semi-Ideal) (kJ/kg-C)	---
Cv (kJ/kgmole-C)	---
Mass Cv (kJ/kg-C)	---
Cv (Ent. Method) (kJ/kgmole-C)	---
Mass Cv (Ent. Method) (kJ/kg-C)	---
Cp/Cv (Ent. Method)	---
Reid VP at 37.8 C (psig)	---
True VP at 37.8 C (psig)	---
Liq. Vol. Flow - Sum(Std. Cond) (barrel/day)	0.0000
HHV Molar Basis (Std) (Btu/SCF)	---
HHV Mass Basis (Std) (kJ/kg)	---
CO2 Loading	---
CO2 App ML Con (kgmole/m3)	---
CO2 App WT Con (kgmol/kg)	0.0000
Phase Fraction [Act. Vol. Basis]	0.0000
Mass Exergy (kJ/kg)	9.739e+006
Viscosity Index	---
Ideal Gas Cp/Cv	1.000
Ideal Gas Cp (kJ/kgmole-C)	-5.304e+005
Mass Ideal Gas Cp (kJ/kg-C)	-2706
Bubble Point Pressure (psig)	---

COMPOSITION

Overall Phase

Vapour Fraction ---

COMPONENTS	MOLAR FLOW (kgmole/h)	MOLE FRACTION	MASS FLOW (tonne/d)	MASS FRACTION	LIQUID VOLUME FLOW (m3/h)	LIQUID VOLUME FRACTION
Methane	0.0000 *	0.0000 *	0.0000 *	0.0000 *	0.0000 *	0.0000 *
Ethane	0.0000 *	0.0000 *	0.0000 *	0.0000 *	0.0000 *	0.0000 *
Propane	0.0000 *	0.0000 *	0.0000 *	0.0000 *	0.0000 *	0.0000 *

* Specified by user.

Material Stream: PANDHI oil (continued)

Fluid Package: Basis-1
Property Package: Peng-Robinson

COMPOSITION

Overall Phase (continued)

Vapour Fraction ---

COMPONENTS	MOLAR FLOW (kgmole/h)	MOLE FRACTION	MASS FLOW (tonne/d)	MASS FRACTION	LIQUID VOLUME FLOW (m3/h)	LIQUID VOLUME FRACTION
i-Butane	0.0000 *	0.0000 *	0.0000 *	0.0000 *	0.0000 *	0.0000 *
n-Butane	0.0000 *	0.0000 *	0.0000 *	0.0000 *	0.0000 *	0.0000 *
i-Pentane	0.0000 *	0.0000 *	0.0000 *	0.0000 *	0.0000 *	0.0000 *
n-Pentane	0.0000 *	0.0000 *	0.0000 *	0.0000 *	0.0000 *	0.0000 *
n-Hexane	0.0000 *	0.0000 *	0.0000 *	0.0000 *	0.0000 *	0.0000 *
Nitrogen	0.0000 *	0.0000 *	0.0000 *	0.0000 *	0.0000 *	0.0000 *
CO2	0.0000 *	0.0000 *	0.0000 *	0.0000 *	0.0000 *	0.0000 *
H2S	0.0000 *	0.0000 *	0.0000 *	0.0000 *	0.0000 *	0.0000 *
H2O	0.0000 *	0.0000 *	0.0000 *	0.0000 *	0.0000 *	0.0000 *
NBP[1]95*	0.2390 *	0.0245 *	0.3897 *	0.0085 *	0.0239 *	0.0104 *
NBP[1]121*	0.2888 *	0.0296 *	0.5049 *	0.0110 *	0.0305 *	0.0133 *
NBP[1]147*	0.3822 *	0.0392 *	0.7356 *	0.0160 *	0.0437 *	0.0191 *
NBP[1]171*	0.7533 *	0.0773 *	1.5851 *	0.0346 *	0.0928 *	0.0405 *
NBP[1]195*	1.0134 *	0.1040 *	2.2759 *	0.0496 *	0.1317 *	0.0574 *
NBP[1]222*	0.7725 *	0.0793 *	1.8658 *	0.0407 *	0.1066 *	0.0465 *
NBP[1]248*	0.6522 *	0.0669 *	1.6937 *	0.0369 *	0.0956 *	0.0417 *
NBP[1]273*	0.5297 *	0.0544 *	1.4712 *	0.0321 *	0.0821 *	0.0358 *
NBP[1]299*	0.4159 *	0.0427 *	1.2317 *	0.0269 *	0.0680 *	0.0297 *
NBP[1]325*	0.3019 *	0.0310 *	0.9498 *	0.0207 *	0.0519 *	0.0227 *
NBP[1]351*	0.2452 *	0.0252 *	0.8201 *	0.0179 *	0.0444 *	0.0194 *
NBP[1]377*	0.2246 *	0.0230 *	0.8008 *	0.0175 *	0.0429 *	0.0187 *
NBP[1]402*	0.2060 *	0.0211 *	0.7836 *	0.0171 *	0.0416 *	0.0181 *
NBP[1]428*	0.1960 *	0.0201 *	0.7954 *	0.0173 *	0.0418 *	0.0182 *
NBP[1]454*	0.1956 *	0.0201 *	0.8479 *	0.0185 *	0.0441 *	0.0192 *
NBP[1]480*	0.1982 *	0.0203 *	0.9181 *	0.0200 *	0.0473 *	0.0206 *
NBP[1]505*	0.1920 *	0.0197 *	0.9484 *	0.0207 *	0.0484 *	0.0211 *
NBP[1]531*	0.1852 *	0.0190 *	0.9740 *	0.0212 *	0.0492 *	0.0215 *
NBP[1]557*	0.1784 *	0.0183 *	0.9978 *	0.0218 *	0.0500 *	0.0218 *
NBP[1]582*	0.1706 *	0.0175 *	1.0132 *	0.0221 *	0.0503 *	0.0220 *
NBP[1]608*	0.1643 *	0.0169 *	1.0351 *	0.0226 *	0.0510 *	0.0222 *
NBP[1]634*	0.1611 *	0.0165 *	1.0753 *	0.0235 *	0.0526 *	0.0229 *
NBP[1]659*	0.1586 *	0.0163 *	1.1194 *	0.0244 *	0.0543 *	0.0237 *
NBP[1]685*	0.1641 *	0.0168 *	1.2227 *	0.0267 *	0.0588 *	0.0257 *
NBP[1]711*	0.1715 *	0.0176 *	1.3445 *	0.0293 *	0.0642 *	0.0280 *
NBP[1]736*	0.1697 *	0.0174 *	1.3915 *	0.0303 *	0.0659 *	0.0288 *
NBP[1]762*	0.1653 *	0.0170 *	1.4214 *	0.0310 *	0.0669 *	0.0292 *
NBP[1]788*	0.1585 *	0.0163 *	1.4424 *	0.0315 *	0.0674 *	0.0294 *
NBP[1]825*	0.2655 *	0.0272 *	2.5963 *	0.0566 *	0.1201 *	0.0524 *
NBP[1]873*	0.1830 *	0.0188 *	1.9404 *	0.0423 *	0.0887 *	0.0387 *
NBP[1]926*	0.1437 *	0.0147 *	1.6472 *	0.0359 *	0.0744 *	0.0325 *
NBP[1]978*	0.1474 *	0.0151 *	1.8524 *	0.0404 *	0.0825 *	0.0360 *
NBP[1]1021*	0.0728 *	0.0075 *	0.9655 *	0.0211 *	0.0426 *	0.0186 *
NBP[1]1075*	0.0449 *	0.0046 *	0.6310 *	0.0138 *	0.0276 *	0.0120 *
NBP[1]1123*	0.0417 *	0.0043 *	0.6267 *	0.0137 *	0.0271 *	0.0118 *
NBP[1]1173*	0.0300 *	0.0031 *	0.4772 *	0.0104 *	0.0205 *	0.0089 *
NBP[1]1250*	0.0393 *	0.0040 *	0.6767 *	0.0148 *	0.0287 *	0.0125 *
NBP[1]1339*	0.0364 *	0.0037 *	0.6999 *	0.0153 *	0.0291 *	0.0127 *
NBP[1]1432*	0.0257 *	0.0026 *	0.5397 *	0.0118 *	0.0221 *	0.0097 *
NBP[1]1528*	0.0180 *	0.0018 *	0.4082 *	0.0089 *	0.0165 *	0.0072 *
NBP[1]1637*	0.0127 *	0.0013 *	0.3047 *	0.0066 *	0.0122 *	0.0053 *
NBP[1]1732*	0.0101 *	0.0010 *	0.2565 *	0.0056 *	0.0101 *	0.0044 *
NBP[1]1819*	0.0097 *	0.0010 *	0.2590 *	0.0056 *	0.0101 *	0.0044 *
NBP[1]1913*	0.0112 *	0.0011 *	0.3148 *	0.0069 *	0.0121 *	0.0053 *
Total	9.7460	1.0000	45.8513	1.0000	2.2926	1.0000

Licensed to: PETROCHEMICAL ENGINEERIN
* Specified by user.

Petrochemical Engineering Consultants Karachi, Pakistan	Case Name:	CASE-2B.hsc
	Unit Set:	NewUser5e
	Date/Time:	Fri Mar 20 18:22:45 2020

Material Stream: Pandhi-C

Fluid Package: Basis-1

Property Package: Peng-Robinson

CONDITIONS

	Overall	Vapour Phase	Liquid Phase	Aqueous Phase
Vapour / Phase Fraction	0.0000	0.0000	1.0000	0.0000
Temperature: (F)	84.79	84.79	84.79	84.79
Pressure: (psig)	445.0	445.0	445.0	445.0
Molar Flow (MMSCFD)	0.3574	0.0000	0.3574	0.0000
Mass Flow (tonne/d)	53.98	0.0000	53.98	0.0000
Std Ideal Liq Vol Flow (barrel/day)	449.3	0.0000	449.3	0.0000
Molar Enthalpy (kJ/kgmole)	-2.875e+005	-8.928e+004	-2.875e+005	-2.859e+005
Molar Entropy (kJ/kgmole-C)	218.7	159.3	218.7	54.83
Heat Flow (MMBtu/hr)	-4.850	0.0000	-4.850	0.0000
Liq Vol Flow @Std Cond (barrel/day)	434.3 *	0.0000	434.3	0.0000

PROPERTIES

	Overall	Vapour Phase	Liquid Phase	Aqueous Phase
Molecular Weight	126.4	21.39	126.4	18.03
Molar Density (kgmole/m3)	6.079	1.408	6.079	55.76
Mass Density (kg/m3)	768.1	30.10	768.1	1005
Act. Volume Flow (barrel/day)	442.0	0.0000	442.0	0.0000
Mass Enthalpy (kJ/kg)	-2275	-4175	-2275	-1.586e+004
Mass Entropy (kJ/kg-C)	1.731	7.448	1.731	3.042
Heat Capacity (kJ/kgmole-C)	253.8	47.13	253.8	77.64
Mass Heat Capacity (kJ/kg-C)	2.009	2.204	2.009	4.307
LHV Molar Basis (Std) (Btu/SCF)	---	---	---	1.809e-004
LHV Mass Basis (Std) (kJ/kg)	---	---	---	8.858e-003
Phase Fraction [Vol. Basis]	---	---	1.000	---
Phase Fraction [Mass Basis]	0.0000	0.0000	1.000	0.0000
Partial Pressure of CO2 (psig)	-14.70	---	---	---
Cost Based on Flow (Cost/s)	0.0000	0.0000	0.0000	0.0000
Act. Gas Flow (ACT_m3/h)	---	---	---	---
Avg. Liq. Density (kgmole/m3)	5.980	16.84	5.980	55.35
Specific Heat (kJ/kgmole-C)	253.8	47.13	253.8	77.64
Std. Gas Flow (STD_m3/h)	420.9	0.0000	420.9	0.0000
Std. Ideal Liq. Mass Density (kg/m3)	755.6	360.1	755.6	997.8
Act. Liq. Flow (barrel/day)	442.0	---	442.0	0.0000
Z Factor	---	0.8953	0.2073	2.260e-002
Watson K	11.99	17.28	11.99	8.497
User Property	---	---	---	---
Partial Pressure of H2S (psig)	-14.70	---	---	---
Cp/(Cp - R)	1.034	1.214	1.034	1.120
Cp/Cv	1.034	1.388	1.034	1.149
Heat of Vap. (kJ/kgmole)	2.556e+005	---	---	---
Kinematic Viscosity (cSt)	12.25	0.3993	12.25	0.8047
Liq. Mass Density (Std. Cond) (kg/m3)	781.8	0.9081	781.8	1015
Liq. Vol. Flow (Std. Cond) (barrel/day)	434.3	0.0000	434.3	0.0000
Liquid Fraction	1.000	0.0000	1.000	1.000
Molar Volume (m3/kgmole)	0.1645	0.7104	0.1645	1.793e-002
Mass Heat of Vap. (kJ/kg)	2023	---	---	---
Phase Fraction [Molar Basis]	0.0000	0.0000	1.0000	0.0000
Surface Tension (dyne/cm)	15.96	---	15.96	71.32
Thermal Conductivity (W/m-K)	0.1006	3.302e-002	0.1006	0.6173
Viscosity (cP)	9.409	1.202e-002	9.409	0.8089
Cv (Semi-Ideal) (kJ/kgmole-C)	245.5	38.81	245.5	69.33
Mass Cv (Semi-Ideal) (kJ/kg-C)	1.943	1.815	1.943	3.846
Cv (kJ/kgmole-C)	245.5	33.96	245.5	67.56
Mass Cv (kJ/kg-C)	1.943	1.588	1.943	3.748
Cv (Ent. Method) (kJ/kgmole-C)	---	-3697	---	66.88
Mass Cv (Ent. Method) (kJ/kg-C)	---	-172.9	---	3.711
Cp/Cv (Ent. Method)	---	-1.275e-002	---	1.161

Licensed to: PETROCHEMICAL ENGINEERIN

* Specified by user.

Material Stream: Pandhi-C (continued)

Fluid Package: Basis-1
Property Package: Peng-Robinson

PROPERTIES

	Overall	Vapour Phase	Liquid Phase	Aqueous Phase
Reid VP at 37.8 C (psig)	97.87	---	97.87	---
True VP at 37.8 C (psig)	475.9	3607	475.9	17.11
Liq. Vol. Flow - Sum(Std. Cond) (barrel/day)	434.3	0.0000	434.3	0.0000
HHV Molar Basis (Std) (Btu/SCF)	---	---	---	46.45
HHV Mass Basis (Std) (kJ/kg)	---	---	---	2274
CO2 Loading	---	---	---	---
CO2 App ML Con (kgmole/m3)	8.172e-002	---	8.172e-002	---
CO2 App WT Con (kgmol/kg)	1.064e-004	---	1.064e-004	---
Phase Fraction [Act. Vol. Basis]	0.0000	0.0000	1.000	0.0000
Mass Exergy (kJ/kg)	19.83	---	---	---
Viscosity Index	24.69	---	---	---
Ideal Gas Cp/Cv	1.043	1.249	1.043	1.329
Ideal Gas Cp (kJ/kgmole-C)	200.0	41.72	200.0	33.60
Mass Ideal Gas Cp (kJ/kg-C)	1.583	1.951	1.583	1.864
Bubble Point Pressure (psig)	445.0	---	---	---

COMPOSITION

Overall Phase

Vapour Fraction 0.0000

COMPONENTS	MOLAR FLOW (kgmole/h)	MOLE FRACTION	MASS FLOW (tonne/d)	MASS FRACTION	LIQUID VOLUME FLOW (m3/h)	LIQUID VOLUME FRACTION
Methane	2.0221	0.1136	0.7786	0.0144	0.1084	0.0364
Ethane	1.1465	0.0644	0.8274	0.0153	0.0969	0.0326
Propane	1.6775	0.0942	1.7753	0.0329	0.1460	0.0490
i-Butane	0.4420	0.0248	0.6166	0.0114	0.0457	0.0154
n-Butane	1.0672	0.0600	1.4887	0.0276	0.1064	0.0357
i-Pentane	0.3860	0.0217	0.6684	0.0124	0.0447	0.0150
n-Pentane	0.4950	0.0278	0.8571	0.0159	0.0567	0.0191
n-Hexane	1.1004	0.0618	2.2760	0.0422	0.1431	0.0481
Nitrogen	0.0228	0.0013	0.0153	0.0003	0.0008	0.0003
CO2	0.2393	0.0134	0.2527	0.0047	0.0128	0.0043
H2S	0.0000	0.0000	0.0000	0.0000	0.0000	0.0000
H2O	0.0107	0.0006	0.0046	0.0001	0.0002	0.0001
NBP[1]95*	0.1457	0.0082	0.2376	0.0044	0.0146	0.0049
NBP[1]121*	0.2063	0.0116	0.3606	0.0067	0.0218	0.0073
NBP[1]147*	0.3061	0.0172	0.5891	0.0109	0.0350	0.0118
NBP[1]171*	0.6492	0.0365	1.3660	0.0253	0.0800	0.0269
NBP[1]195*	0.9179	0.0516	2.0614	0.0382	0.1193	0.0401
NBP[1]222*	0.7271	0.0408	1.7563	0.0325	0.1004	0.0337
NBP[1]248*	0.6282	0.0353	1.6313	0.0302	0.0921	0.0309
NBP[1]273*	0.5177	0.0291	1.4378	0.0266	0.0803	0.0270
NBP[1]299*	0.4103	0.0230	1.2148	0.0225	0.0671	0.0225
NBP[1]325*	0.2995	0.0168	0.9422	0.0175	0.0515	0.0173
NBP[1]351*	0.2442	0.0137	0.8165	0.0151	0.0442	0.0148
NBP[1]377*	0.2240	0.0126	0.7989	0.0148	0.0428	0.0144
NBP[1]402*	0.2058	0.0116	0.7826	0.0145	0.0415	0.0139
NBP[1]428*	0.1959	0.0110	0.7949	0.0147	0.0417	0.0140
NBP[1]454*	0.1955	0.0110	0.8477	0.0157	0.0441	0.0148
NBP[1]480*	0.1981	0.0111	0.9180	0.0170	0.0473	0.0159
NBP[1]505*	0.1920	0.0108	0.9483	0.0176	0.0484	0.0162
NBP[1]531*	0.1852	0.0104	0.9740	0.0180	0.0492	0.0165
NBP[1]557*	0.1784	0.0100	0.9978	0.0185	0.0500	0.0168
NBP[1]582*	0.1706	0.0096	1.0132	0.0188	0.0503	0.0169
NBP[1]608*	0.1643	0.0092	1.0351	0.0192	0.0510	0.0171
NBP[1]634*	0.1611	0.0090	1.0753	0.0199	0.0526	0.0177
NBP[1]659*	0.1586	0.0089	1.1194	0.0207	0.0543	0.0182
NBP[1]685*	0.1641	0.0092	1.2227	0.0227	0.0588	0.0198

* Specified by user.

Material Stream: Pandhi-C (continued)

Fluid Package: Basis-1
Property Package: Peng-Robinson

COMPOSITION

Overall Phase (continued)

Vapour Fraction 0.0000

COMPONENTS	MOLAR FLOW (kgmole/h)	MOLE FRACTION	MASS FLOW (tonne/d)	MASS FRACTION	LIQUID VOLUME FLOW (m3/h)	LIQUID VOLUME FRACTION
NBP[1]711*	0.1715	0.0096	1.3445	0.0249	0.0642	0.0216
NBP[1]736*	0.1697	0.0095	1.3915	0.0258	0.0659	0.0221
NBP[1]762*	0.1653	0.0093	1.4214	0.0263	0.0669	0.0225
NBP[1]788*	0.1585	0.0089	1.4424	0.0267	0.0674	0.0226
NBP[1]825*	0.2655	0.0149	2.5963	0.0481	0.1201	0.0404
NBP[1]873*	0.1830	0.0103	1.9404	0.0359	0.0887	0.0298
NBP[1]926*	0.1437	0.0081	1.6472	0.0305	0.0744	0.0250
NBP[1]978*	0.1474	0.0083	1.8524	0.0343	0.0825	0.0277
NBP[1]1021*	0.0728	0.0041	0.9655	0.0179	0.0426	0.0143
NBP[1]1075*	0.0449	0.0025	0.6310	0.0117	0.0276	0.0093
NBP[1]1123*	0.0417	0.0023	0.6267	0.0116	0.0271	0.0091
NBP[1]1173*	0.0300	0.0017	0.4772	0.0088	0.0205	0.0069
NBP[1]1250*	0.0393	0.0022	0.6767	0.0125	0.0287	0.0096
NBP[1]1339*	0.0364	0.0020	0.6999	0.0130	0.0291	0.0098
NBP[1]1432*	0.0257	0.0014	0.5397	0.0100	0.0221	0.0074
NBP[1]1528*	0.0180	0.0010	0.4082	0.0076	0.0165	0.0055
NBP[1]1637*	0.0127	0.0007	0.3047	0.0056	0.0122	0.0041
NBP[1]1732*	0.0101	0.0006	0.2565	0.0048	0.0101	0.0034
NBP[1]1819*	0.0096	0.0005	0.2561	0.0047	0.0100	0.0034
NBP[1]1913*	0.0000	0.0000	0.0000	0.0000	0.0000	0.0000
Total	17.8012	1.0000	53.9808	1.0000	2.9766	1.0000

Vapour Phase

Phase Fraction 0.0000

COMPONENTS	MOLAR FLOW (kgmole/h)	MOLE FRACTION	MASS FLOW (tonne/d)	MASS FRACTION	LIQUID VOLUME FLOW (m3/h)	LIQUID VOLUME FRACTION
Methane	0.0000	0.7649	0.0000	0.5738	0.0000	0.6901
Ethane	0.0000	0.1032	0.0000	0.1451	0.0000	0.1469
Propane	0.0000	0.0507	0.0000	0.1046	0.0000	0.0743
i-Butane	0.0000	0.0059	0.0000	0.0161	0.0000	0.0103
n-Butane	0.0000	0.0108	0.0000	0.0292	0.0000	0.0181
i-Pentane	0.0000	0.0017	0.0000	0.0058	0.0000	0.0034
n-Pentane	0.0000	0.0017	0.0000	0.0059	0.0000	0.0033
n-Hexane	0.0000	0.0014	0.0000	0.0056	0.0000	0.0030
Nitrogen	0.0000	0.0208	0.0000	0.0272	0.0000	0.0122
CO2	0.0000	0.0341	0.0000	0.0701	0.0000	0.0306
H2S	0.0000	0.0000	0.0000	0.0000	0.0000	0.0000
H2O	0.0000	0.0015	0.0000	0.0012	0.0000	0.0004
NBP[1]95*	0.0000	0.0005	0.0000	0.0017	0.0000	0.0009
NBP[1]121*	0.0000	0.0005	0.0000	0.0017	0.0000	0.0009
NBP[1]147*	0.0000	0.0005	0.0000	0.0018	0.0000	0.0009
NBP[1]171*	0.0000	0.0006	0.0000	0.0027	0.0000	0.0013
NBP[1]195*	0.0000	0.0006	0.0000	0.0026	0.0000	0.0013
NBP[1]222*	0.0000	0.0003	0.0000	0.0013	0.0000	0.0006
NBP[1]248*	0.0000	0.0001	0.0000	0.0007	0.0000	0.0003
NBP[1]273*	0.0000	0.0001	0.0000	0.0004	0.0000	0.0002
NBP[1]299*	0.0000	0.0000	0.0000	0.0002	0.0000	0.0001
NBP[1]325*	0.0000	0.0000	0.0000	0.0001	0.0000	0.0000
NBP[1]351*	0.0000	0.0000	0.0000	0.0000	0.0000	0.0000
NBP[1]377*	0.0000	0.0000	0.0000	0.0000	0.0000	0.0000
NBP[1]402*	0.0000	0.0000	0.0000	0.0000	0.0000	0.0000
NBP[1]428*	0.0000	0.0000	0.0000	0.0000	0.0000	0.0000
NBP[1]454*	0.0000	0.0000	0.0000	0.0000	0.0000	0.0000
NBP[1]480*	0.0000	0.0000	0.0000	0.0000	0.0000	0.0000
NBP[1]505*	0.0000	0.0000	0.0000	0.0000	0.0000	0.0000

Licensed to: PETROCHEMICAL ENGINEERIN
* Specified by user.

Material Stream: Pandhi-C (continued)

Fluid Package: Basis-1
Property Package: Peng-Robinson

COMPOSITION

Vapour Phase (continued)

Phase Fraction 0.0000

COMPONENTS	MOLAR FLOW (kgmole/h)	MOLE FRACTION	MASS FLOW (tonne/d)	MASS FRACTION	LIQUID VOLUME FLOW (m3/h)	LIQUID VOLUME FRACTION
NBP[1]531*	0.0000	0.0000	0.0000	0.0000	0.0000	0.0000
NBP[1]557*	0.0000	0.0000	0.0000	0.0000	0.0000	0.0000
NBP[1]582*	0.0000	0.0000	0.0000	0.0000	0.0000	0.0000
NBP[1]608*	0.0000	0.0000	0.0000	0.0000	0.0000	0.0000
NBP[1]634*	0.0000	0.0000	0.0000	0.0000	0.0000	0.0000
NBP[1]659*	0.0000	0.0000	0.0000	0.0000	0.0000	0.0000
NBP[1]685*	0.0000	0.0000	0.0000	0.0000	0.0000	0.0000
NBP[1]711*	0.0000	0.0000	0.0000	0.0000	0.0000	0.0000
NBP[1]736*	0.0000	0.0000	0.0000	0.0000	0.0000	0.0000
NBP[1]762*	0.0000	0.0000	0.0000	0.0000	0.0000	0.0000
NBP[1]788*	0.0000	0.0000	0.0000	0.0000	0.0000	0.0000
NBP[1]825*	0.0000	0.0000	0.0000	0.0000	0.0000	0.0000
NBP[1]873*	0.0000	0.0000	0.0000	0.0000	0.0000	0.0000
NBP[1]926*	0.0000	0.0000	0.0000	0.0000	0.0000	0.0000
NBP[1]978*	0.0000	0.0000	0.0000	0.0000	0.0000	0.0000
NBP[1]1021*	0.0000	0.0000	0.0000	0.0000	0.0000	0.0000
NBP[1]1075*	0.0000	0.0000	0.0000	0.0000	0.0000	0.0000
NBP[1]1123*	0.0000	0.0000	0.0000	0.0000	0.0000	0.0000
NBP[1]1173*	0.0000	0.0000	0.0000	0.0000	0.0000	0.0000
NBP[1]1250*	0.0000	0.0000	0.0000	0.0000	0.0000	0.0000
NBP[1]1339*	0.0000	0.0000	0.0000	0.0000	0.0000	0.0000
NBP[1]1432*	0.0000	0.0000	0.0000	0.0000	0.0000	0.0000
NBP[1]1528*	0.0000	0.0000	0.0000	0.0000	0.0000	0.0000
NBP[1]1637*	0.0000	0.0000	0.0000	0.0000	0.0000	0.0000
NBP[1]1732*	0.0000	0.0000	0.0000	0.0000	0.0000	0.0000
NBP[1]1819*	0.0000	0.0000	0.0000	0.0000	0.0000	0.0000
NBP[1]1913*	0.0000	0.0000	0.0000	0.0023	0.0000	0.0008
Total	0.0000	1.0000	0.0000	1.0000	0.0000	1.0000

Liquid Phase

Phase Fraction 1.000

COMPONENTS	MOLAR FLOW (kgmole/h)	MOLE FRACTION	MASS FLOW (tonne/d)	MASS FRACTION	LIQUID VOLUME FLOW (m3/h)	LIQUID VOLUME FRACTION
Methane	2.0221	0.1136	0.7786	0.0144	0.1084	0.0364
Ethane	1.1465	0.0644	0.8274	0.0153	0.0969	0.0326
Propane	1.6775	0.0942	1.7753	0.0329	0.1460	0.0490
i-Butane	0.4420	0.0248	0.6166	0.0114	0.0457	0.0154
n-Butane	1.0672	0.0600	1.4887	0.0276	0.1064	0.0357
i-Pentane	0.3860	0.0217	0.6684	0.0124	0.0447	0.0150
n-Pentane	0.4950	0.0278	0.8571	0.0159	0.0567	0.0191
n-Hexane	1.1004	0.0618	2.2760	0.0422	0.1431	0.0481
Nitrogen	0.0228	0.0013	0.0153	0.0003	0.0008	0.0003
CO2	0.2393	0.0134	0.2527	0.0047	0.0128	0.0043
H2S	0.0000	0.0000	0.0000	0.0000	0.0000	0.0000
H2O	0.0107	0.0006	0.0046	0.0001	0.0002	0.0001
NBP[1]95*	0.1457	0.0082	0.2376	0.0044	0.0146	0.0049
NBP[1]121*	0.2063	0.0116	0.3606	0.0067	0.0218	0.0073
NBP[1]147*	0.3061	0.0172	0.5891	0.0109	0.0350	0.0118
NBP[1]171*	0.6492	0.0365	1.3660	0.0253	0.0800	0.0269
NBP[1]195*	0.9179	0.0516	2.0614	0.0382	0.1193	0.0401
NBP[1]222*	0.7271	0.0408	1.7563	0.0325	0.1004	0.0337
NBP[1]248*	0.6282	0.0353	1.6313	0.0302	0.0921	0.0309
NBP[1]273*	0.5177	0.0291	1.4378	0.0266	0.0803	0.0270
NBP[1]299*	0.4103	0.0230	1.2148	0.0225	0.0671	0.0225
NBP[1]325*	0.2995	0.0168	0.9422	0.0175	0.0515	0.0173

* Specified by user.

Material Stream: Pandhi-C (continued)

Fluid Package: Basis-1
Property Package: Peng-Robinson

COMPOSITION

Liquid Phase (continued)

Phase Fraction 1.000

COMPONENTS	MOLAR FLOW (kgmole/h)	MOLE FRACTION	MASS FLOW (tonne/d)	MASS FRACTION	LIQUID VOLUME FLOW (m3/h)	LIQUID VOLUME FRACTION
NBP[1]351*	0.2442	0.0137	0.8165	0.0151	0.0442	0.0148
NBP[1]377*	0.2240	0.0126	0.7989	0.0148	0.0428	0.0144
NBP[1]402*	0.2058	0.0116	0.7826	0.0145	0.0415	0.0139
NBP[1]428*	0.1959	0.0110	0.7949	0.0147	0.0417	0.0140
NBP[1]454*	0.1955	0.0110	0.8477	0.0157	0.0441	0.0148
NBP[1]480*	0.1981	0.0111	0.9180	0.0170	0.0473	0.0159
NBP[1]505*	0.1920	0.0108	0.9483	0.0176	0.0484	0.0162
NBP[1]531*	0.1852	0.0104	0.9740	0.0180	0.0492	0.0165
NBP[1]557*	0.1784	0.0100	0.9978	0.0185	0.0500	0.0168
NBP[1]582*	0.1706	0.0096	1.0132	0.0188	0.0503	0.0169
NBP[1]608*	0.1643	0.0092	1.0351	0.0192	0.0510	0.0171
NBP[1]634*	0.1611	0.0090	1.0753	0.0199	0.0526	0.0177
NBP[1]659*	0.1586	0.0089	1.1194	0.0207	0.0543	0.0182
NBP[1]685*	0.1641	0.0092	1.2227	0.0227	0.0588	0.0198
NBP[1]711*	0.1715	0.0096	1.3445	0.0249	0.0642	0.0216
NBP[1]736*	0.1697	0.0095	1.3915	0.0258	0.0659	0.0221
NBP[1]762*	0.1653	0.0093	1.4214	0.0263	0.0669	0.0225
NBP[1]788*	0.1585	0.0089	1.4424	0.0267	0.0674	0.0226
NBP[1]825*	0.2655	0.0149	2.5963	0.0481	0.1201	0.0404
NBP[1]873*	0.1830	0.0103	1.9404	0.0359	0.0887	0.0298
NBP[1]926*	0.1437	0.0081	1.6472	0.0305	0.0744	0.0250
NBP[1]978*	0.1474	0.0083	1.8524	0.0343	0.0825	0.0277
NBP[1]1021*	0.0728	0.0041	0.9655	0.0179	0.0426	0.0143
NBP[1]1075*	0.0449	0.0025	0.6310	0.0117	0.0276	0.0093
NBP[1]1123*	0.0417	0.0023	0.6267	0.0116	0.0271	0.0091
NBP[1]1173*	0.0300	0.0017	0.4772	0.0088	0.0205	0.0069
NBP[1]1250*	0.0393	0.0022	0.6767	0.0125	0.0287	0.0096
NBP[1]1339*	0.0364	0.0020	0.6999	0.0130	0.0291	0.0098
NBP[1]1432*	0.0257	0.0014	0.5397	0.0100	0.0221	0.0074
NBP[1]1528*	0.0180	0.0010	0.4082	0.0076	0.0165	0.0055
NBP[1]1637*	0.0127	0.0007	0.3047	0.0056	0.0122	0.0041
NBP[1]1732*	0.0101	0.0006	0.2565	0.0048	0.0101	0.0034
NBP[1]1819*	0.0096	0.0005	0.2561	0.0047	0.0100	0.0034
NBP[1]1913*	0.0000	0.0000	0.0000	0.0000	0.0000	0.0000
Total	17.8012	1.0000	53.9808	1.0000	2.9766	1.0000

Aqueous Phase

Phase Fraction 0.0000

COMPONENTS	MOLAR FLOW (kgmole/h)	MOLE FRACTION	MASS FLOW (tonne/d)	MASS FRACTION	LIQUID VOLUME FLOW (m3/h)	LIQUID VOLUME FRACTION
Methane	0.0000	0.0000	0.0000	0.0000	0.0000	0.0000
Ethane	0.0000	0.0000	0.0000	0.0000	0.0000	0.0000
Propane	0.0000	0.0000	0.0000	0.0000	0.0000	0.0000
i-Butane	0.0000	0.0000	0.0000	0.0000	0.0000	0.0000
n-Butane	0.0000	0.0000	0.0000	0.0000	0.0000	0.0000
i-Pentane	0.0000	0.0000	0.0000	0.0000	0.0000	0.0000
n-Pentane	0.0000	0.0000	0.0000	0.0000	0.0000	0.0000
n-Hexane	0.0000	0.0000	0.0000	0.0000	0.0000	0.0000
Nitrogen	0.0000	0.0000	0.0000	0.0000	0.0000	0.0000
CO2	0.0000	0.0004	0.0000	0.0010	0.0000	0.0012
H2S	0.0000	0.0000	0.0000	0.0000	0.0000	0.0000
H2O	0.0000	0.9996	0.0000	0.9990	0.0000	0.9988
NBP[1]95*	0.0000	0.0000	0.0000	0.0000	0.0000	0.0000
NBP[1]121*	0.0000	0.0000	0.0000	0.0000	0.0000	0.0000
NBP[1]147*	0.0000	0.0000	0.0000	0.0000	0.0000	0.0000

* Specified by user.

Material Stream: Pandhi-C (continued)

Fluid Package: Basis-1
Property Package: Peng-Robinson

COMPOSITION

Aqueous Phase (continued)

Phase Fraction 0.0000

COMPONENTS	MOLAR FLOW (kgmole/h)	MOLE FRACTION	MASS FLOW (tonne/d)	MASS FRACTION	LIQUID VOLUME FLOW (m3/h)	LIQUID VOLUME FRACTION
NBP[1]171*	0.0000	0.0000	0.0000	0.0000	0.0000	0.0000
NBP[1]195*	0.0000	0.0000	0.0000	0.0000	0.0000	0.0000
NBP[1]222*	0.0000	0.0000	0.0000	0.0000	0.0000	0.0000
NBP[1]248*	0.0000	0.0000	0.0000	0.0000	0.0000	0.0000
NBP[1]273*	0.0000	0.0000	0.0000	0.0000	0.0000	0.0000
NBP[1]299*	0.0000	0.0000	0.0000	0.0000	0.0000	0.0000
NBP[1]325*	0.0000	0.0000	0.0000	0.0000	0.0000	0.0000
NBP[1]351*	0.0000	0.0000	0.0000	0.0000	0.0000	0.0000
NBP[1]377*	0.0000	0.0000	0.0000	0.0000	0.0000	0.0000
NBP[1]402*	0.0000	0.0000	0.0000	0.0000	0.0000	0.0000
NBP[1]428*	0.0000	0.0000	0.0000	0.0000	0.0000	0.0000
NBP[1]454*	0.0000	0.0000	0.0000	0.0000	0.0000	0.0000
NBP[1]480*	0.0000	0.0000	0.0000	0.0000	0.0000	0.0000
NBP[1]505*	0.0000	0.0000	0.0000	0.0000	0.0000	0.0000
NBP[1]531*	0.0000	0.0000	0.0000	0.0000	0.0000	0.0000
NBP[1]557*	0.0000	0.0000	0.0000	0.0000	0.0000	0.0000
NBP[1]582*	0.0000	0.0000	0.0000	0.0000	0.0000	0.0000
NBP[1]608*	0.0000	0.0000	0.0000	0.0000	0.0000	0.0000
NBP[1]634*	0.0000	0.0000	0.0000	0.0000	0.0000	0.0000
NBP[1]659*	0.0000	0.0000	0.0000	0.0000	0.0000	0.0000
NBP[1]685*	0.0000	0.0000	0.0000	0.0000	0.0000	0.0000
NBP[1]711*	0.0000	0.0000	0.0000	0.0000	0.0000	0.0000
NBP[1]736*	0.0000	0.0000	0.0000	0.0000	0.0000	0.0000
NBP[1]762*	0.0000	0.0000	0.0000	0.0000	0.0000	0.0000
NBP[1]788*	0.0000	0.0000	0.0000	0.0000	0.0000	0.0000
NBP[1]825*	0.0000	0.0000	0.0000	0.0000	0.0000	0.0000
NBP[1]873*	0.0000	0.0000	0.0000	0.0000	0.0000	0.0000
NBP[1]926*	0.0000	0.0000	0.0000	0.0000	0.0000	0.0000
NBP[1]978*	0.0000	0.0000	0.0000	0.0000	0.0000	0.0000
NBP[1]1021*	0.0000	0.0000	0.0000	0.0000	0.0000	0.0000
NBP[1]1075*	0.0000	0.0000	0.0000	0.0000	0.0000	0.0000
NBP[1]1123*	0.0000	0.0000	0.0000	0.0000	0.0000	0.0000
NBP[1]1173*	0.0000	0.0000	0.0000	0.0000	0.0000	0.0000
NBP[1]1250*	0.0000	0.0000	0.0000	0.0000	0.0000	0.0000
NBP[1]1339*	0.0000	0.0000	0.0000	0.0000	0.0000	0.0000
NBP[1]1432*	0.0000	0.0000	0.0000	0.0000	0.0000	0.0000
NBP[1]1528*	0.0000	0.0000	0.0000	0.0000	0.0000	0.0000
NBP[1]1637*	0.0000	0.0000	0.0000	0.0000	0.0000	0.0000
NBP[1]1732*	0.0000	0.0000	0.0000	0.0000	0.0000	0.0000
NBP[1]1819*	0.0000	0.0000	0.0000	0.0000	0.0000	0.0000
NBP[1]1913*	0.0000	0.0000	0.0000	0.0000	0.0000	0.0000
Total	0.0000	1.0000	0.0000	1.0000	0.0000	1.0000

Material Stream: Pandhi-Cond.

Fluid Package: Basis-1
Property Package: Peng-Robinson

CONDITIONS

		Overall	Vapour Phase	Liquid Phase	Aqueous Phase
Vapour / Phase Fraction		0.0000	0.0000	1.0000	0.0000
Temperature:	(F)	134.8	134.8	134.8	134.8
Pressure:	(psig)	645.0	645.0	645.0	645.0
Molar Flow	(MMSCFD)	0.2947	0.0000	0.2947	0.0000
Mass Flow	(tonne/d)	48.86	0.0000	48.86	0.0000
Std Ideal Liq Vol Flow	(barrel/day)	397.5	0.0000	397.5	0.0000

* Specified by user.

Material Stream: Pandhi-Cond. (continued)

Fluid Package: Basis-1
Property Package: Peng-Robinson

CONDITIONS

	Overall	Vapour Phase	Liquid Phase	Aqueous Phase
Molar Enthalpy (kJ/kgmole)	-3.053e+005	-8.943e+004	-3.053e+005	-2.837e+005
Molar Entropy (kJ/kgmole-C)	268.8	159.9	268.8	61.63
Heat Flow (MMBtu/hr)	-4.247	0.0000	-4.247	0.0000
Liq Vol Flow @Std Cond (barrel/day)	384.6 *	0.0000	384.6	0.0000

PROPERTIES

	Overall	Vapour Phase	Liquid Phase	Aqueous Phase
Molecular Weight	138.7	21.91	138.7	18.02
Molar Density (kgmole/m3)	5.479	1.869	5.479	54.61
Mass Density (kg/m3)	760.0	40.96	760.0	984.4
Act. Volume Flow (barrel/day)	404.4	0.0000	404.4	0.0000
Mass Enthalpy (kJ/kg)	-2201	-4081	-2201	-1.574e+004
Mass Entropy (kJ/kg-C)	1.938	7.296	1.938	3.419
Heat Capacity (kJ/kgmole-C)	293.3	50.96	293.3	77.83
Mass Heat Capacity (kJ/kg-C)	2.114	2.326	2.114	4.318
LHV Molar Basis (Std) (Btu/SCF)	---	---	---	9.264e-004
LHV Mass Basis (Std) (kJ/kg)	---	---	---	4.536e-002
Phase Fraction [Vol. Basis]	---	---	1.000	---
Phase Fraction [Mass Basis]	0.0000	0.0000	1.000	0.0000
Partial Pressure of CO2 (psig)	-14.70	---	---	---
Cost Based on Flow (Cost/s)	0.0000	0.0000	0.0000	0.0000
Act. Gas Flow (ACT_m3/h)	---	---	---	---
Avg. Liq. Density (kgmole/m3)	5.574	16.71	5.574	55.36
Specific Heat (kJ/kgmole-C)	293.3	50.96	293.3	77.83
Std. Gas Flow (STD_m3/h)	347.0	0.0000	347.0	0.0000
Std. Ideal Liq. Mass Density (kg/m3)	773.2	366.2	773.2	997.8
Act. Liq. Flow (barrel/day)	404.4	---	404.4	0.0000
Z Factor	---	0.8861	0.3023	3.033e-002
Watson K	11.91	17.11	11.91	8.500
User Property	---	---	---	---
Partial Pressure of H2S (psig)	-14.70	---	---	---
Cp/(Cp - R)	1.029	1.195	1.029	1.120
Cp/Cv	1.209	1.388	1.209	1.161
Heat of Vap. (kJ/kgmole)	2.546e+005	---	---	---
Kinematic Viscosity (cSt)	1.205	0.3258	1.205	0.4919
Liq. Mass Density (Std. Cond) (kg/m3)	799.1	0.9307	799.1	1015
Liq. Vol. Flow (Std. Cond) (barrel/day)	384.6	0.0000	384.6	0.0000
Liquid Fraction	1.000	0.0000	1.000	1.000
Molar Volume (m3/kgmole)	0.1825	0.5350	0.1825	1.831e-002
Mass Heat of Vap. (kJ/kg)	1835	---	---	---
Phase Fraction [Molar Basis]	0.0000	0.0000	1.0000	0.0000
Surface Tension (dyne/cm)	14.67	---	14.67	66.45
Thermal Conductivity (W/m-K)	9.689e-002	3.754e-002	9.689e-002	0.6507
Viscosity (cP)	0.9160	1.335e-002	0.9160	0.4842
Cv (Semi-Ideal) (kJ/kgmole-C)	284.9	42.65	284.9	69.52
Mass Cv (Semi-Ideal) (kJ/kg-C)	2.054	1.946	2.054	3.857
Cv (kJ/kgmole-C)	242.7	36.71	242.7	67.01
Mass Cv (kJ/kg-C)	1.749	1.675	1.749	3.718
Cv (Ent. Method) (kJ/kgmole-C)	---	-4152	---	65.75
Mass Cv (Ent. Method) (kJ/kg-C)	---	-189.5	---	3.648
Cp/Cv (Ent. Method)	---	-1.228e-002	---	1.184
Reid VP at 37.8 C (psig)	97.93	---	97.93	---
True VP at 37.8 C (psig)	567.4	5197	567.4	169.7
Liq. Vol. Flow - Sum(Std. Cond) (barrel/day)	384.6	0.0000	384.6	0.0000
HHV Molar Basis (Std) (Btu/SCF)	---	---	---	46.45
HHV Mass Basis (Std) (kJ/kg)	---	---	---	2275
CO2 Loading	---	---	---	---

* Specified by user.

Material Stream: Pandhi-Cond. (continued)

Fluid Package: Basis-1
Property Package: Peng-Robinson

PROPERTIES

	Overall	Vapour Phase	Liquid Phase	Aqueous Phase
CO2 App ML Con (kgmole/m3)	7.452e-002	---	7.452e-002	---
CO2 App WT Con (kgmol/kg)	9.805e-005	---	9.805e-005	---
Phase Fraction [Act. Vol. Basis]	0.0000	0.0000	1.000	0.0000
Mass Exergy (kJ/kg)	24.90	---	---	---
Viscosity Index	5.703	---	---	---
Ideal Gas Cp/Cv	1.036	1.231	1.036	1.327
Ideal Gas Cp (kJ/kgmole-C)	236.5	44.30	236.5	33.77
Mass Ideal Gas Cp (kJ/kg-C)	1.705	2.022	1.705	1.874
Bubble Point Pressure (psig)	645.0	---	---	---

COMPOSITION

Overall Phase

Vapour Fraction 0.0000

COMPONENTS	MOLAR FLOW (kgmole/h)	MOLE FRACTION	MASS FLOW (tonne/d)	MASS FRACTION	LIQUID VOLUME FLOW (m3/h)	LIQUID VOLUME FRACTION
Methane	1.9941	0.1359	0.7678	0.0157	0.1069	0.0406
Ethane	0.8842	0.0602	0.6381	0.0131	0.0747	0.0284
Propane	1.1014	0.0750	1.1656	0.0239	0.0959	0.0364
i-Butane	0.2683	0.0183	0.3743	0.0077	0.0277	0.0105
n-Butane	0.6374	0.0434	0.8891	0.0182	0.0635	0.0241
i-Pentane	0.2328	0.0159	0.4031	0.0082	0.0269	0.0102
n-Pentane	0.3018	0.0206	0.5226	0.0107	0.0346	0.0131
n-Hexane	0.7599	0.0518	1.5717	0.0322	0.0988	0.0375
Nitrogen	0.0261	0.0018	0.0175	0.0004	0.0009	0.0003
CO2	0.1996	0.0136	0.2108	0.0043	0.0106	0.0040
H2S	0.0000	0.0000	0.0000	0.0000	0.0000	0.0000
H2O	0.0284	0.0019	0.0123	0.0003	0.0005	0.0002
NBP[1]95*	0.0900	0.0061	0.1467	0.0030	0.0090	0.0034
NBP[1]121*	0.1319	0.0090	0.2306	0.0047	0.0139	0.0053
NBP[1]147*	0.2066	0.0141	0.3976	0.0081	0.0236	0.0090
NBP[1]171*	0.4658	0.0317	0.9802	0.0201	0.0574	0.0218
NBP[1]195*	0.7015	0.0478	1.5755	0.0322	0.0912	0.0346
NBP[1]222*	0.5957	0.0406	1.4388	0.0294	0.0822	0.0312
NBP[1]248*	0.5440	0.0371	1.4128	0.0289	0.0798	0.0303
NBP[1]273*	0.4683	0.0319	1.3007	0.0266	0.0726	0.0276
NBP[1]299*	0.3834	0.0261	1.1353	0.0232	0.0627	0.0238
NBP[1]325*	0.2867	0.0195	0.9018	0.0185	0.0493	0.0187
NBP[1]351*	0.2375	0.0162	0.7943	0.0163	0.0430	0.0163
NBP[1]377*	0.2203	0.0150	0.7856	0.0161	0.0421	0.0160
NBP[1]402*	0.2037	0.0139	0.7748	0.0159	0.0411	0.0156
NBP[1]428*	0.1948	0.0133	0.7903	0.0162	0.0415	0.0158
NBP[1]454*	0.1948	0.0133	0.8449	0.0173	0.0439	0.0167
NBP[1]480*	0.1978	0.0135	0.9163	0.0188	0.0472	0.0179
NBP[1]505*	0.1918	0.0131	0.9473	0.0194	0.0483	0.0184
NBP[1]531*	0.1851	0.0126	0.9735	0.0199	0.0492	0.0187
NBP[1]557*	0.1784	0.0122	0.9975	0.0204	0.0500	0.0190
NBP[1]582*	0.1706	0.0116	1.0130	0.0207	0.0503	0.0191
NBP[1]608*	0.1643	0.0112	1.0350	0.0212	0.0510	0.0194
NBP[1]634*	0.1611	0.0110	1.0753	0.0220	0.0526	0.0200
NBP[1]659*	0.1586	0.0108	1.1194	0.0229	0.0543	0.0206
NBP[1]685*	0.1641	0.0112	1.2227	0.0250	0.0588	0.0223
NBP[1]711*	0.1715	0.0117	1.3445	0.0275	0.0642	0.0244
NBP[1]736*	0.1697	0.0116	1.3915	0.0285	0.0659	0.0250
NBP[1]762*	0.1653	0.0113	1.4214	0.0291	0.0669	0.0254
NBP[1]788*	0.1585	0.0108	1.4424	0.0295	0.0674	0.0256
NBP[1]825*	0.2655	0.0181	2.5963	0.0531	0.1201	0.0456
NBP[1]873*	0.1830	0.0125	1.9404	0.0397	0.0887	0.0337

* Specified by user.

Material Stream: Pandhi-Cond. (continued)

Fluid Package: Basis-1
Property Package: Peng-Robinson

COMPOSITION

Overall Phase (continued)

Vapour Fraction 0.0000

COMPONENTS	MOLAR FLOW (kgmole/h)	MOLE FRACTION	MASS FLOW (tonne/d)	MASS FRACTION	LIQUID VOLUME FLOW (m3/h)	LIQUID VOLUME FRACTION
NBP[1]926*	0.1437	0.0098	1.6472	0.0337	0.0744	0.0283
NBP[1]978*	0.1474	0.0100	1.8524	0.0379	0.0825	0.0313
NBP[1]1021*	0.0728	0.0050	0.9655	0.0198	0.0426	0.0162
NBP[1]1075*	0.0449	0.0031	0.6310	0.0129	0.0276	0.0105
NBP[1]1123*	0.0417	0.0028	0.6267	0.0128	0.0271	0.0103
NBP[1]1173*	0.0300	0.0020	0.4772	0.0098	0.0205	0.0078
NBP[1]1250*	0.0393	0.0027	0.6767	0.0138	0.0287	0.0109
NBP[1]1339*	0.0364	0.0025	0.6999	0.0143	0.0291	0.0111
NBP[1]1432*	0.0257	0.0017	0.5397	0.0110	0.0221	0.0084
NBP[1]1528*	0.0180	0.0012	0.4082	0.0084	0.0165	0.0063
NBP[1]1637*	0.0127	0.0009	0.3047	0.0062	0.0122	0.0046
NBP[1]1732*	0.0101	0.0007	0.2565	0.0052	0.0101	0.0039
NBP[1]1819*	0.0096	0.0007	0.2550	0.0052	0.0100	0.0038
NBP[1]1913*	0.0000	0.0000	0.0000	0.0000	0.0000	0.0000
Total	14.6765	1.0000	48.8600	1.0000	2.6329	1.0000

Vapour Phase

Phase Fraction 0.0000

COMPONENTS	MOLAR FLOW (kgmole/h)	MOLE FRACTION	MASS FLOW (tonne/d)	MASS FRACTION	LIQUID VOLUME FLOW (m3/h)	LIQUID VOLUME FRACTION
Methane	0.0000	0.7538	0.0000	0.5519	0.0000	0.6750
Ethane	0.0000	0.1026	0.0000	0.1408	0.0000	0.1450
Propane	0.0000	0.0521	0.0000	0.1048	0.0000	0.0757
i-Butane	0.0000	0.0065	0.0000	0.0172	0.0000	0.0112
n-Butane	0.0000	0.0122	0.0000	0.0323	0.0000	0.0203
i-Pentane	0.0000	0.0023	0.0000	0.0075	0.0000	0.0044
n-Pentane	0.0000	0.0024	0.0000	0.0080	0.0000	0.0046
n-Hexane	0.0000	0.0026	0.0000	0.0103	0.0000	0.0057
Nitrogen	0.0000	0.0205	0.0000	0.0262	0.0000	0.0119
CO2	0.0000	0.0337	0.0000	0.0678	0.0000	0.0301
H2S	0.0000	0.0000	0.0000	0.0000	0.0000	0.0000
H2O	0.0000	0.0045	0.0000	0.0037	0.0000	0.0014
NBP[1]95*	0.0000	0.0007	0.0000	0.0023	0.0000	0.0012
NBP[1]121*	0.0000	0.0008	0.0000	0.0025	0.0000	0.0013
NBP[1]147*	0.0000	0.0008	0.0000	0.0030	0.0000	0.0016
NBP[1]171*	0.0000	0.0013	0.0000	0.0052	0.0000	0.0027
NBP[1]195*	0.0000	0.0014	0.0000	0.0059	0.0000	0.0030
NBP[1]222*	0.0000	0.0008	0.0000	0.0035	0.0000	0.0017
NBP[1]248*	0.0000	0.0004	0.0000	0.0022	0.0000	0.0011
NBP[1]273*	0.0000	0.0002	0.0000	0.0013	0.0000	0.0006
NBP[1]299*	0.0000	0.0001	0.0000	0.0007	0.0000	0.0004
NBP[1]325*	0.0000	0.0001	0.0000	0.0004	0.0000	0.0002
NBP[1]351*	0.0000	0.0000	0.0000	0.0002	0.0000	0.0001
NBP[1]377*	0.0000	0.0000	0.0000	0.0001	0.0000	0.0001
NBP[1]402*	0.0000	0.0000	0.0000	0.0001	0.0000	0.0000
NBP[1]428*	0.0000	0.0000	0.0000	0.0000	0.0000	0.0000
NBP[1]454*	0.0000	0.0000	0.0000	0.0000	0.0000	0.0000
NBP[1]480*	0.0000	0.0000	0.0000	0.0000	0.0000	0.0000
NBP[1]505*	0.0000	0.0000	0.0000	0.0000	0.0000	0.0000
NBP[1]531*	0.0000	0.0000	0.0000	0.0000	0.0000	0.0000
NBP[1]557*	0.0000	0.0000	0.0000	0.0000	0.0000	0.0000
NBP[1]582*	0.0000	0.0000	0.0000	0.0000	0.0000	0.0000
NBP[1]608*	0.0000	0.0000	0.0000	0.0000	0.0000	0.0000
NBP[1]634*	0.0000	0.0000	0.0000	0.0000	0.0000	0.0000
NBP[1]659*	0.0000	0.0000	0.0000	0.0000	0.0000	0.0000

* Specified by user.

Material Stream: Pandhi-Cond. (continued)

Fluid Package: Basis-1
Property Package: Peng-Robinson

COMPOSITION

Vapour Phase (continued)

Phase Fraction 0.0000

COMPONENTS	MOLAR FLOW (kgmole/h)	MOLE FRACTION	MASS FLOW (tonne/d)	MASS FRACTION	LIQUID VOLUME FLOW (m3/h)	LIQUID VOLUME FRACTION
NBP[1]685*	0.0000	0.0000	0.0000	0.0000	0.0000	0.0000
NBP[1]711*	0.0000	0.0000	0.0000	0.0000	0.0000	0.0000
NBP[1]736*	0.0000	0.0000	0.0000	0.0000	0.0000	0.0000
NBP[1]762*	0.0000	0.0000	0.0000	0.0000	0.0000	0.0000
NBP[1]788*	0.0000	0.0000	0.0000	0.0000	0.0000	0.0000
NBP[1]825*	0.0000	0.0000	0.0000	0.0000	0.0000	0.0000
NBP[1]873*	0.0000	0.0000	0.0000	0.0000	0.0000	0.0000
NBP[1]926*	0.0000	0.0000	0.0000	0.0000	0.0000	0.0000
NBP[1]978*	0.0000	0.0000	0.0000	0.0000	0.0000	0.0000
NBP[1]1021*	0.0000	0.0000	0.0000	0.0000	0.0000	0.0000
NBP[1]1075*	0.0000	0.0000	0.0000	0.0000	0.0000	0.0000
NBP[1]1123*	0.0000	0.0000	0.0000	0.0000	0.0000	0.0000
NBP[1]1173*	0.0000	0.0000	0.0000	0.0000	0.0000	0.0000
NBP[1]1250*	0.0000	0.0000	0.0000	0.0000	0.0000	0.0000
NBP[1]1339*	0.0000	0.0000	0.0000	0.0000	0.0000	0.0000
NBP[1]1432*	0.0000	0.0000	0.0000	0.0000	0.0000	0.0000
NBP[1]1528*	0.0000	0.0000	0.0000	0.0000	0.0000	0.0000
NBP[1]1637*	0.0000	0.0000	0.0000	0.0000	0.0000	0.0000
NBP[1]1732*	0.0000	0.0000	0.0000	0.0000	0.0000	0.0000
NBP[1]1819*	0.0000	0.0000	0.0000	0.0000	0.0000	0.0000
NBP[1]1913*	0.0000	0.0000	0.0000	0.0022	0.0000	0.0007
Total	0.0000	1.0000	0.0000	1.0000	0.0000	1.0000

Liquid Phase

Phase Fraction 1.000

COMPONENTS	MOLAR FLOW (kgmole/h)	MOLE FRACTION	MASS FLOW (tonne/d)	MASS FRACTION	LIQUID VOLUME FLOW (m3/h)	LIQUID VOLUME FRACTION
Methane	1.9941	0.1359	0.7678	0.0157	0.1069	0.0406
Ethane	0.8842	0.0602	0.6381	0.0131	0.0747	0.0284
Propane	1.1014	0.0750	1.1656	0.0239	0.0959	0.0364
i-Butane	0.2683	0.0183	0.3743	0.0077	0.0277	0.0105
n-Butane	0.6374	0.0434	0.8891	0.0182	0.0635	0.0241
i-Pentane	0.2328	0.0159	0.4031	0.0082	0.0269	0.0102
n-Pentane	0.3018	0.0206	0.5226	0.0107	0.0346	0.0131
n-Hexane	0.7599	0.0518	1.5717	0.0322	0.0988	0.0375
Nitrogen	0.0261	0.0018	0.0175	0.0004	0.0009	0.0003
CO2	0.1996	0.0136	0.2108	0.0043	0.0106	0.0040
H2S	0.0000	0.0000	0.0000	0.0000	0.0000	0.0000
H2O	0.0284	0.0019	0.0123	0.0003	0.0005	0.0002
NBP[1]95*	0.0900	0.0061	0.1467	0.0030	0.0090	0.0034
NBP[1]121*	0.1319	0.0090	0.2306	0.0047	0.0139	0.0053
NBP[1]147*	0.2066	0.0141	0.3976	0.0081	0.0236	0.0090
NBP[1]171*	0.4658	0.0317	0.9802	0.0201	0.0574	0.0218
NBP[1]195*	0.7015	0.0478	1.5755	0.0322	0.0912	0.0346
NBP[1]222*	0.5957	0.0406	1.4388	0.0294	0.0822	0.0312
NBP[1]248*	0.5440	0.0371	1.4128	0.0289	0.0798	0.0303
NBP[1]273*	0.4683	0.0319	1.3007	0.0266	0.0726	0.0276
NBP[1]299*	0.3834	0.0261	1.1353	0.0232	0.0627	0.0238
NBP[1]325*	0.2867	0.0195	0.9018	0.0185	0.0493	0.0187
NBP[1]351*	0.2375	0.0162	0.7943	0.0163	0.0430	0.0163
NBP[1]377*	0.2203	0.0150	0.7856	0.0161	0.0421	0.0160
NBP[1]402*	0.2037	0.0139	0.7748	0.0159	0.0411	0.0156
NBP[1]428*	0.1948	0.0133	0.7903	0.0162	0.0415	0.0158
NBP[1]454*	0.1948	0.0133	0.8449	0.0173	0.0439	0.0167
NBP[1]480*	0.1978	0.0135	0.9163	0.0188	0.0472	0.0179

* Specified by user.

Material Stream: Pandhi-Cond. (continued)

Fluid Package: Basis-1
Property Package: Peng-Robinson

COMPOSITION

Liquid Phase (continued)

Phase Fraction 1.000

COMPONENTS	MOLAR FLOW (kgmole/h)	MOLE FRACTION	MASS FLOW (tonne/d)	MASS FRACTION	LIQUID VOLUME FLOW (m3/h)	LIQUID VOLUME FRACTION
NBP[1]505*	0.1918	0.0131	0.9473	0.0194	0.0483	0.0184
NBP[1]531*	0.1851	0.0126	0.9735	0.0199	0.0492	0.0187
NBP[1]557*	0.1784	0.0122	0.9975	0.0204	0.0500	0.0190
NBP[1]582*	0.1706	0.0116	1.0130	0.0207	0.0503	0.0191
NBP[1]608*	0.1643	0.0112	1.0350	0.0212	0.0510	0.0194
NBP[1]634*	0.1611	0.0110	1.0753	0.0220	0.0526	0.0200
NBP[1]659*	0.1586	0.0108	1.1194	0.0229	0.0543	0.0206
NBP[1]685*	0.1641	0.0112	1.2227	0.0250	0.0588	0.0223
NBP[1]711*	0.1715	0.0117	1.3445	0.0275	0.0642	0.0244
NBP[1]736*	0.1697	0.0116	1.3915	0.0285	0.0659	0.0250
NBP[1]762*	0.1653	0.0113	1.4214	0.0291	0.0669	0.0254
NBP[1]788*	0.1585	0.0108	1.4424	0.0295	0.0674	0.0256
NBP[1]825*	0.2655	0.0181	2.5963	0.0531	0.1201	0.0456
NBP[1]873*	0.1830	0.0125	1.9404	0.0397	0.0887	0.0337
NBP[1]926*	0.1437	0.0098	1.6472	0.0337	0.0744	0.0283
NBP[1]978*	0.1474	0.0100	1.8524	0.0379	0.0825	0.0313
NBP[1]1021*	0.0728	0.0050	0.9655	0.0198	0.0426	0.0162
NBP[1]1075*	0.0449	0.0031	0.6310	0.0129	0.0276	0.0105
NBP[1]1123*	0.0417	0.0028	0.6267	0.0128	0.0271	0.0103
NBP[1]1173*	0.0300	0.0020	0.4772	0.0098	0.0205	0.0078
NBP[1]1250*	0.0393	0.0027	0.6767	0.0138	0.0287	0.0109
NBP[1]1339*	0.0364	0.0025	0.6999	0.0143	0.0291	0.0111
NBP[1]1432*	0.0257	0.0017	0.5397	0.0110	0.0221	0.0084
NBP[1]1528*	0.0180	0.0012	0.4082	0.0084	0.0165	0.0063
NBP[1]1637*	0.0127	0.0009	0.3047	0.0062	0.0122	0.0046
NBP[1]1732*	0.0101	0.0007	0.2565	0.0052	0.0101	0.0039
NBP[1]1819*	0.0096	0.0007	0.2550	0.0052	0.0100	0.0038
NBP[1]1913*	0.0000	0.0000	0.0000	0.0000	0.0000	0.0000
Total	14.6765	1.0000	48.8600	1.0000	2.6329	1.0000

Aqueous Phase

Phase Fraction 0.0000

COMPONENTS	MOLAR FLOW (kgmole/h)	MOLE FRACTION	MASS FLOW (tonne/d)	MASS FRACTION	LIQUID VOLUME FLOW (m3/h)	LIQUID VOLUME FRACTION
Methane	0.0000	0.0000	0.0000	0.0000	0.0000	0.0000
Ethane	0.0000	0.0000	0.0000	0.0000	0.0000	0.0000
Propane	0.0000	0.0000	0.0000	0.0000	0.0000	0.0000
i-Butane	0.0000	0.0000	0.0000	0.0000	0.0000	0.0000
n-Butane	0.0000	0.0000	0.0000	0.0000	0.0000	0.0000
i-Pentane	0.0000	0.0000	0.0000	0.0000	0.0000	0.0000
n-Pentane	0.0000	0.0000	0.0000	0.0000	0.0000	0.0000
n-Hexane	0.0000	0.0000	0.0000	0.0000	0.0000	0.0000
Nitrogen	0.0000	0.0000	0.0000	0.0000	0.0000	0.0000
CO2	0.0000	0.0003	0.0000	0.0008	0.0000	0.0010
H2S	0.0000	0.0000	0.0000	0.0000	0.0000	0.0000
H2O	0.0000	0.9997	0.0000	0.9992	0.0000	0.9990
NBP[1]95*	0.0000	0.0000	0.0000	0.0000	0.0000	0.0000
NBP[1]121*	0.0000	0.0000	0.0000	0.0000	0.0000	0.0000
NBP[1]147*	0.0000	0.0000	0.0000	0.0000	0.0000	0.0000
NBP[1]171*	0.0000	0.0000	0.0000	0.0000	0.0000	0.0000
NBP[1]195*	0.0000	0.0000	0.0000	0.0000	0.0000	0.0000
NBP[1]222*	0.0000	0.0000	0.0000	0.0000	0.0000	0.0000
NBP[1]248*	0.0000	0.0000	0.0000	0.0000	0.0000	0.0000
NBP[1]273*	0.0000	0.0000	0.0000	0.0000	0.0000	0.0000
NBP[1]299*	0.0000	0.0000	0.0000	0.0000	0.0000	0.0000

* Specified by user.

Material Stream: Pandhi-Cond. (continued)

Fluid Package: Basis-1
Property Package: Peng-Robinson

COMPOSITION

Aqueous Phase (continued)

Phase Fraction 0.0000

COMPONENTS	MOLAR FLOW (kgmole/h)	MOLE FRACTION	MASS FLOW (tonne/d)	MASS FRACTION	LIQUID VOLUME FLOW (m3/h)	LIQUID VOLUME FRACTION
NBP[1]325*	0.0000	0.0000	0.0000	0.0000	0.0000	0.0000
NBP[1]351*	0.0000	0.0000	0.0000	0.0000	0.0000	0.0000
NBP[1]377*	0.0000	0.0000	0.0000	0.0000	0.0000	0.0000
NBP[1]402*	0.0000	0.0000	0.0000	0.0000	0.0000	0.0000
NBP[1]428*	0.0000	0.0000	0.0000	0.0000	0.0000	0.0000
NBP[1]454*	0.0000	0.0000	0.0000	0.0000	0.0000	0.0000
NBP[1]480*	0.0000	0.0000	0.0000	0.0000	0.0000	0.0000
NBP[1]505*	0.0000	0.0000	0.0000	0.0000	0.0000	0.0000
NBP[1]531*	0.0000	0.0000	0.0000	0.0000	0.0000	0.0000
NBP[1]557*	0.0000	0.0000	0.0000	0.0000	0.0000	0.0000
NBP[1]582*	0.0000	0.0000	0.0000	0.0000	0.0000	0.0000
NBP[1]608*	0.0000	0.0000	0.0000	0.0000	0.0000	0.0000
NBP[1]634*	0.0000	0.0000	0.0000	0.0000	0.0000	0.0000
NBP[1]659*	0.0000	0.0000	0.0000	0.0000	0.0000	0.0000
NBP[1]685*	0.0000	0.0000	0.0000	0.0000	0.0000	0.0000
NBP[1]711*	0.0000	0.0000	0.0000	0.0000	0.0000	0.0000
NBP[1]736*	0.0000	0.0000	0.0000	0.0000	0.0000	0.0000
NBP[1]762*	0.0000	0.0000	0.0000	0.0000	0.0000	0.0000
NBP[1]788*	0.0000	0.0000	0.0000	0.0000	0.0000	0.0000
NBP[1]825*	0.0000	0.0000	0.0000	0.0000	0.0000	0.0000
NBP[1]873*	0.0000	0.0000	0.0000	0.0000	0.0000	0.0000
NBP[1]926*	0.0000	0.0000	0.0000	0.0000	0.0000	0.0000
NBP[1]978*	0.0000	0.0000	0.0000	0.0000	0.0000	0.0000
NBP[1]1021*	0.0000	0.0000	0.0000	0.0000	0.0000	0.0000
NBP[1]1075*	0.0000	0.0000	0.0000	0.0000	0.0000	0.0000
NBP[1]1123*	0.0000	0.0000	0.0000	0.0000	0.0000	0.0000
NBP[1]1173*	0.0000	0.0000	0.0000	0.0000	0.0000	0.0000
NBP[1]1250*	0.0000	0.0000	0.0000	0.0000	0.0000	0.0000
NBP[1]1339*	0.0000	0.0000	0.0000	0.0000	0.0000	0.0000
NBP[1]1432*	0.0000	0.0000	0.0000	0.0000	0.0000	0.0000
NBP[1]1528*	0.0000	0.0000	0.0000	0.0000	0.0000	0.0000
NBP[1]1637*	0.0000	0.0000	0.0000	0.0000	0.0000	0.0000
NBP[1]1732*	0.0000	0.0000	0.0000	0.0000	0.0000	0.0000
NBP[1]1819*	0.0000	0.0000	0.0000	0.0000	0.0000	0.0000
NBP[1]1913*	0.0000	0.0000	0.0000	0.0000	0.0000	0.0000
Total	0.0000	1.0000	0.0000	1.0000	0.0000	1.0000

Material Stream: Pandhi-Gas

Fluid Package: Basis-1
Property Package: Peng-Robinson

CONDITIONS

		Overall	Vapour Phase	Liquid Phase	Aqueous Phase
Vapour / Phase Fraction		1.0000	1.0000	0.0000	0.0000
Temperature:	(F)	84.79	84.79	84.79	84.79
Pressure:	(psig)	445.0	445.0	445.0	445.0
Molar Flow	(MMSCFD)	5.381	5.381	0.0000	0.0000
Mass Flow	(tonne/d)	137.6	137.6	0.0000	0.0000
Std Ideal Liq Vol Flow	(barrel/day)	2403	2403	0.0000	0.0000
Molar Enthalpy	(kJ/kgmole)	-8.928e+004	-8.928e+004	-2.875e+005	-2.859e+005
Molar Entropy	(kJ/kgmole-C)	159.3	159.3	218.7	54.83
Heat Flow	(MMBtu/hr)	-22.68	-22.68	0.0000	0.0000
Liq Vol Flow @Std Cond	(barrel/day)	9.528e+005 *	9.528e+005	0.0000	0.0000

* Specified by user.

Material Stream: Pandhi-Gas (continued)

Fluid Package: Basis-1
Property Package: Peng-Robinson

PROPERTIES

	Overall	Vapour Phase	Liquid Phase	Aqueous Phase
Molecular Weight	21.39	21.39	126.4	18.03
Molar Density (kgmole/m3)	1.408	1.408	6.079	55.76
Mass Density (kg/m3)	30.10	30.10	768.1	1005
Act. Volume Flow (barrel/day)	2.874e+004	2.874e+004	0.0000	0.0000
Mass Enthalpy (kJ/kg)	-4175	-4175	-2275	-1.586e+004
Mass Entropy (kJ/kg-C)	7.448	7.448	1.731	3.042
Heat Capacity (kJ/kgmole-C)	47.13	47.13	253.8	77.64
Mass Heat Capacity (kJ/kg-C)	2.204	2.204	2.009	4.307
LHV Molar Basis (Std) (Btu/SCF)	---	---	---	1.809e-004
LHV Mass Basis (Std) (kJ/kg)	---	---	---	8.858e-003
Phase Fraction [Vol. Basis]	1.000	1.000	---	---
Phase Fraction [Mass Basis]	1.000	1.000	0.0000	0.0000
Partial Pressure of CO2 (psig)	0.9692	---	---	---
Cost Based on Flow (Cost/s)	0.0000	0.0000	0.0000	0.0000
Act. Gas Flow (ACT_m3/h)	190.4	190.4	---	---
Avg. Liq. Density (kgmole/m3)	16.84	16.84	5.980	55.35
Specific Heat (kJ/kgmole-C)	47.13	47.13	253.8	77.64
Std. Gas Flow (STD_m3/h)	6337	6337	0.0000	0.0000
Std. Ideal Liq. Mass Density (kg/m3)	360.1	360.1	755.6	997.8
Act. Liq. Flow (barrel/day)	0.0000	---	---	0.0000
Z Factor	---	0.8953	0.2073	2.260e-002
Watson K	17.28	17.28	11.99	8.497
User Property	---	---	---	---
Partial Pressure of H2S (psig)	-14.70	---	---	---
Cp/(Cp - R)	1.214	1.214	1.034	1.120
Cp/Cv	1.388	1.388	1.034	1.149
Heat of Vap. (kJ/kgmole)	1.879e+004	---	---	---
Kinematic Viscosity (cSt)	0.3993	0.3993	12.25	0.8047
Liq. Mass Density (Std. Cond) (kg/m3)	0.9081	0.9081	781.8	1015
Liq. Vol. Flow (Std. Cond) (barrel/day)	9.528e+005	9.528e+005	0.0000	0.0000
Liquid Fraction	0.0000	0.0000	1.000	1.000
Molar Volume (m3/kgmole)	0.7104	0.7104	0.1645	1.793e-002
Mass Heat of Vap. (kJ/kg)	878.6	---	---	---
Phase Fraction [Molar Basis]	1.0000	1.0000	0.0000	0.0000
Surface Tension (dyne/cm)	---	---	15.96	71.32
Thermal Conductivity (W/m-K)	3.302e-002	3.302e-002	0.1006	0.6173
Viscosity (cP)	1.202e-002	1.202e-002	9.409	0.8089
Cv (Semi-Ideal) (kJ/kgmole-C)	38.81	38.81	245.5	69.33
Mass Cv (Semi-Ideal) (kJ/kg-C)	1.815	1.815	1.943	3.846
Cv (kJ/kgmole-C)	33.96	33.96	245.5	67.56
Mass Cv (kJ/kg-C)	1.588	1.588	1.943	3.748
Cv (Ent. Method) (kJ/kgmole-C)	-508.4	-3697	---	66.88
Mass Cv (Ent. Method) (kJ/kg-C)	-23.77	-172.9	---	3.711
Cp/Cv (Ent. Method)	-9.270e-002	-1.275e-002	---	1.161
Reid VP at 37.8 C (psig)	---	---	97.87	---
True VP at 37.8 C (psig)	3607	3607	475.9	17.11
Liq. Vol. Flow - Sum(Std. Cond) (barrel/day)	9.528e+005	9.528e+005	0.0000	0.0000
HHV Molar Basis (Std) (Btu/SCF)	---	---	---	46.45
HHV Mass Basis (Std) (kJ/kg)	---	---	---	2274
CO2 Loading	---	---	---	---
CO2 App ML Con (kgmole/m3)	---	---	---	---
CO2 App WT Con (kgmol/kg)	---	---	---	---
Phase Fraction [Act. Vol. Basis]	1.000	1.000	0.0000	0.0000
Mass Exergy (kJ/kg)	387.1	---	---	---
Viscosity Index	-58.95	---	---	---
Ideal Gas Cp/Cv	1.249	1.249	1.043	1.329
Ideal Gas Cp (kJ/kgmole-C)	41.72	41.72	200.0	33.60

* Specified by user.

Material Stream: Pandhi-Gas (continued)

Fluid Package: Basis-1
Property Package: Peng-Robinson

PROPERTIES

	Overall	Vapour Phase	Liquid Phase	Aqueous Phase
Mass Ideal Gas Cp (kJ/kg-C)	1.951	1.951	1.583	1.864
Bubble Point Pressure (psig)	4658	---	---	---

COMPOSITION

Overall Phase

Vapour Fraction 1.0000

COMPONENTS	MOLAR FLOW (kgmole/h)	MOLE FRACTION	MASS FLOW (tonne/d)	MASS FRACTION	LIQUID VOLUME FLOW (m3/h)	LIQUID VOLUME FRACTION
Methane	205.0219	0.7649	78.9395	0.5738	10.9860	0.6901
Ethane	27.6541	0.1032	19.9573	0.1451	2.3379	0.1469
Propane	13.5902	0.0507	14.3829	0.1046	1.1828	0.0743
i-Butane	1.5866	0.0059	2.2133	0.0161	0.1641	0.0103
n-Butane	2.8841	0.0108	4.0233	0.0292	0.2874	0.0181
i-Pentane	0.4635	0.0017	0.8025	0.0058	0.0536	0.0034
n-Pentane	0.4652	0.0017	0.8056	0.0059	0.0533	0.0033
n-Hexane	0.3694	0.0014	0.7639	0.0056	0.0480	0.0030
Nitrogen	5.5752	0.0208	3.7483	0.0272	0.1937	0.0122
CO2	9.1335	0.0341	9.6471	0.0701	0.4870	0.0306
H2S	0.0005	0.0000	0.0004	0.0000	0.0000	0.0000
H2O	0.3945	0.0015	0.1706	0.0012	0.0071	0.0004
NBP[1]95*	0.1425	0.0005	0.2323	0.0017	0.0142	0.0009
NBP[1]121*	0.1318	0.0005	0.2305	0.0017	0.0139	0.0009
NBP[1]147*	0.1254	0.0005	0.2414	0.0018	0.0144	0.0009
NBP[1]171*	0.1733	0.0006	0.3646	0.0027	0.0213	0.0013
NBP[1]195*	0.1579	0.0006	0.3546	0.0026	0.0205	0.0013
NBP[1]222*	0.0732	0.0003	0.1768	0.0013	0.0101	0.0006
NBP[1]248*	0.0375	0.0001	0.0974	0.0007	0.0055	0.0003
NBP[1]273*	0.0181	0.0001	0.0503	0.0004	0.0028	0.0002
NBP[1]299*	0.0083	0.0000	0.0245	0.0002	0.0014	0.0001
NBP[1]325*	0.0033	0.0000	0.0105	0.0001	0.0006	0.0000
NBP[1]351*	0.0015	0.0000	0.0050	0.0000	0.0003	0.0000
NBP[1]377*	0.0007	0.0000	0.0025	0.0000	0.0001	0.0000
NBP[1]402*	0.0003	0.0000	0.0013	0.0000	0.0001	0.0000
NBP[1]428*	0.0002	0.0000	0.0007	0.0000	0.0000	0.0000
NBP[1]454*	0.0001	0.0000	0.0003	0.0000	0.0000	0.0000
NBP[1]480*	0.0000	0.0000	0.0002	0.0000	0.0000	0.0000
NBP[1]505*	0.0000	0.0000	0.0001	0.0000	0.0000	0.0000
NBP[1]531*	0.0000	0.0000	0.0000	0.0000	0.0000	0.0000
NBP[1]557*	0.0000	0.0000	0.0000	0.0000	0.0000	0.0000
NBP[1]582*	0.0000	0.0000	0.0000	0.0000	0.0000	0.0000
NBP[1]608*	0.0000	0.0000	0.0000	0.0000	0.0000	0.0000
NBP[1]634*	0.0000	0.0000	0.0000	0.0000	0.0000	0.0000
NBP[1]659*	0.0000	0.0000	0.0000	0.0000	0.0000	0.0000
NBP[1]685*	0.0000	0.0000	0.0000	0.0000	0.0000	0.0000
NBP[1]711*	0.0000	0.0000	0.0000	0.0000	0.0000	0.0000
NBP[1]736*	0.0000	0.0000	0.0000	0.0000	0.0000	0.0000
NBP[1]762*	0.0000	0.0000	0.0000	0.0000	0.0000	0.0000
NBP[1]788*	0.0000	0.0000	0.0000	0.0000	0.0000	0.0000
NBP[1]825*	0.0000	0.0000	0.0000	0.0000	0.0000	0.0000
NBP[1]873*	0.0000	0.0000	0.0000	0.0000	0.0000	0.0000
NBP[1]926*	0.0000	0.0000	0.0000	0.0000	0.0000	0.0000
NBP[1]978*	0.0000	0.0000	0.0000	0.0000	0.0000	0.0000
NBP[1]1021*	0.0000	0.0000	0.0000	0.0000	0.0000	0.0000
NBP[1]1075*	0.0000	0.0000	0.0000	0.0000	0.0000	0.0000
NBP[1]1123*	0.0000	0.0000	0.0000	0.0000	0.0000	0.0000
NBP[1]1173*	0.0000	0.0000	0.0000	0.0000	0.0000	0.0000
NBP[1]1250*	0.0000	0.0000	0.0000	0.0000	0.0000	0.0000

* Specified by user.

Material Stream: Pandhi-Gas (continued)

Fluid Package: Basis-1
Property Package: Peng-Robinson

COMPOSITION

Overall Phase (continued)

Vapour Fraction 1.0000

COMPONENTS	MOLAR FLOW (kgmole/h)	MOLE FRACTION	MASS FLOW (tonne/d)	MASS FRACTION	LIQUID VOLUME FLOW (m3/h)	LIQUID VOLUME FRACTION
NBP[1]1339*	0.0000	0.0000	0.0000	0.0000	0.0000	0.0000
NBP[1]1432*	0.0000	0.0000	0.0000	0.0000	0.0000	0.0000
NBP[1]1528*	0.0000	0.0000	0.0000	0.0000	0.0000	0.0000
NBP[1]1637*	0.0000	0.0000	0.0000	0.0000	0.0000	0.0000
NBP[1]1732*	0.0000	0.0000	0.0000	0.0000	0.0000	0.0000
NBP[1]1819*	0.0001	0.0000	0.0029	0.0000	0.0001	0.0000
NBP[1]1913*	0.0112	0.0000	0.3148	0.0023	0.0121	0.0008
Total	268.0242	1.0000	137.5655	1.0000	15.9186	1.0000

Vapour Phase

Phase Fraction 1.000

COMPONENTS	MOLAR FLOW (kgmole/h)	MOLE FRACTION	MASS FLOW (tonne/d)	MASS FRACTION	LIQUID VOLUME FLOW (m3/h)	LIQUID VOLUME FRACTION
Methane	205.0219	0.7649	78.9395	0.5738	10.9860	0.6901
Ethane	27.6541	0.1032	19.9573	0.1451	2.3379	0.1469
Propane	13.5902	0.0507	14.3829	0.1046	1.1828	0.0743
i-Butane	1.5866	0.0059	2.2133	0.0161	0.1641	0.0103
n-Butane	2.8841	0.0108	4.0233	0.0292	0.2874	0.0181
i-Pentane	0.4635	0.0017	0.8025	0.0058	0.0536	0.0034
n-Pentane	0.4652	0.0017	0.8056	0.0059	0.0533	0.0033
n-Hexane	0.3694	0.0014	0.7639	0.0056	0.0480	0.0030
Nitrogen	5.5752	0.0208	3.7483	0.0272	0.1937	0.0122
CO2	9.1335	0.0341	9.6471	0.0701	0.4870	0.0306
H2S	0.0005	0.0000	0.0004	0.0000	0.0000	0.0000
H2O	0.3945	0.0015	0.1706	0.0012	0.0071	0.0004
NBP[1]95*	0.1425	0.0005	0.2323	0.0017	0.0142	0.0009
NBP[1]121*	0.1318	0.0005	0.2305	0.0017	0.0139	0.0009
NBP[1]147*	0.1254	0.0005	0.2414	0.0018	0.0144	0.0009
NBP[1]171*	0.1733	0.0006	0.3646	0.0027	0.0213	0.0013
NBP[1]195*	0.1579	0.0006	0.3546	0.0026	0.0205	0.0013
NBP[1]222*	0.0732	0.0003	0.1768	0.0013	0.0101	0.0006
NBP[1]248*	0.0375	0.0001	0.0974	0.0007	0.0055	0.0003
NBP[1]273*	0.0181	0.0001	0.0503	0.0004	0.0028	0.0002
NBP[1]299*	0.0083	0.0000	0.0245	0.0002	0.0014	0.0001
NBP[1]325*	0.0033	0.0000	0.0105	0.0001	0.0006	0.0000
NBP[1]351*	0.0015	0.0000	0.0050	0.0000	0.0003	0.0000
NBP[1]377*	0.0007	0.0000	0.0025	0.0000	0.0001	0.0000
NBP[1]402*	0.0003	0.0000	0.0013	0.0000	0.0001	0.0000
NBP[1]428*	0.0002	0.0000	0.0007	0.0000	0.0000	0.0000
NBP[1]454*	0.0001	0.0000	0.0003	0.0000	0.0000	0.0000
NBP[1]480*	0.0000	0.0000	0.0002	0.0000	0.0000	0.0000
NBP[1]505*	0.0000	0.0000	0.0001	0.0000	0.0000	0.0000
NBP[1]531*	0.0000	0.0000	0.0000	0.0000	0.0000	0.0000
NBP[1]557*	0.0000	0.0000	0.0000	0.0000	0.0000	0.0000
NBP[1]582*	0.0000	0.0000	0.0000	0.0000	0.0000	0.0000
NBP[1]608*	0.0000	0.0000	0.0000	0.0000	0.0000	0.0000
NBP[1]634*	0.0000	0.0000	0.0000	0.0000	0.0000	0.0000
NBP[1]659*	0.0000	0.0000	0.0000	0.0000	0.0000	0.0000
NBP[1]685*	0.0000	0.0000	0.0000	0.0000	0.0000	0.0000
NBP[1]711*	0.0000	0.0000	0.0000	0.0000	0.0000	0.0000
NBP[1]736*	0.0000	0.0000	0.0000	0.0000	0.0000	0.0000
NBP[1]762*	0.0000	0.0000	0.0000	0.0000	0.0000	0.0000
NBP[1]788*	0.0000	0.0000	0.0000	0.0000	0.0000	0.0000
NBP[1]825*	0.0000	0.0000	0.0000	0.0000	0.0000	0.0000
NBP[1]873*	0.0000	0.0000	0.0000	0.0000	0.0000	0.0000

* Specified by user.

Material Stream: Pandhi-Gas (continued)

Fluid Package: Basis-1
Property Package: Peng-Robinson

COMPOSITION

Vapour Phase (continued)

Phase Fraction 1.000

COMPONENTS	MOLAR FLOW (kgmole/h)	MOLE FRACTION	MASS FLOW (tonne/d)	MASS FRACTION	LIQUID VOLUME FLOW (m3/h)	LIQUID VOLUME FRACTION
NBP[1]926*	0.0000	0.0000	0.0000	0.0000	0.0000	0.0000
NBP[1]978*	0.0000	0.0000	0.0000	0.0000	0.0000	0.0000
NBP[1]1021*	0.0000	0.0000	0.0000	0.0000	0.0000	0.0000
NBP[1]1075*	0.0000	0.0000	0.0000	0.0000	0.0000	0.0000
NBP[1]1123*	0.0000	0.0000	0.0000	0.0000	0.0000	0.0000
NBP[1]1173*	0.0000	0.0000	0.0000	0.0000	0.0000	0.0000
NBP[1]1250*	0.0000	0.0000	0.0000	0.0000	0.0000	0.0000
NBP[1]1339*	0.0000	0.0000	0.0000	0.0000	0.0000	0.0000
NBP[1]1432*	0.0000	0.0000	0.0000	0.0000	0.0000	0.0000
NBP[1]1528*	0.0000	0.0000	0.0000	0.0000	0.0000	0.0000
NBP[1]1637*	0.0000	0.0000	0.0000	0.0000	0.0000	0.0000
NBP[1]1732*	0.0000	0.0000	0.0000	0.0000	0.0000	0.0000
NBP[1]1819*	0.0001	0.0000	0.0029	0.0000	0.0001	0.0000
NBP[1]1913*	0.0112	0.0000	0.3148	0.0023	0.0121	0.0008
Total	268.0242	1.0000	137.5655	1.0000	15.9186	1.0000

Liquid Phase

Phase Fraction 0.0000

COMPONENTS	MOLAR FLOW (kgmole/h)	MOLE FRACTION	MASS FLOW (tonne/d)	MASS FRACTION	LIQUID VOLUME FLOW (m3/h)	LIQUID VOLUME FRACTION
Methane	0.0000	0.1136	0.0000	0.0144	0.0000	0.0364
Ethane	0.0000	0.0644	0.0000	0.0153	0.0000	0.0326
Propane	0.0000	0.0942	0.0000	0.0329	0.0000	0.0490
i-Butane	0.0000	0.0248	0.0000	0.0114	0.0000	0.0154
n-Butane	0.0000	0.0600	0.0000	0.0276	0.0000	0.0357
i-Pentane	0.0000	0.0217	0.0000	0.0124	0.0000	0.0150
n-Pentane	0.0000	0.0278	0.0000	0.0159	0.0000	0.0191
n-Hexane	0.0000	0.0618	0.0000	0.0422	0.0000	0.0481
Nitrogen	0.0000	0.0013	0.0000	0.0003	0.0000	0.0003
CO2	0.0000	0.0134	0.0000	0.0047	0.0000	0.0043
H2S	0.0000	0.0000	0.0000	0.0000	0.0000	0.0000
H2O	0.0000	0.0006	0.0000	0.0001	0.0000	0.0001
NBP[1]95*	0.0000	0.0082	0.0000	0.0044	0.0000	0.0049
NBP[1]121*	0.0000	0.0116	0.0000	0.0067	0.0000	0.0073
NBP[1]147*	0.0000	0.0172	0.0000	0.0109	0.0000	0.0118
NBP[1]171*	0.0000	0.0365	0.0000	0.0253	0.0000	0.0269
NBP[1]195*	0.0000	0.0516	0.0000	0.0382	0.0000	0.0401
NBP[1]222*	0.0000	0.0408	0.0000	0.0325	0.0000	0.0337
NBP[1]248*	0.0000	0.0353	0.0000	0.0302	0.0000	0.0309
NBP[1]273*	0.0000	0.0291	0.0000	0.0266	0.0000	0.0270
NBP[1]299*	0.0000	0.0230	0.0000	0.0225	0.0000	0.0225
NBP[1]325*	0.0000	0.0168	0.0000	0.0175	0.0000	0.0173
NBP[1]351*	0.0000	0.0137	0.0000	0.0151	0.0000	0.0148
NBP[1]377*	0.0000	0.0126	0.0000	0.0148	0.0000	0.0144
NBP[1]402*	0.0000	0.0116	0.0000	0.0145	0.0000	0.0139
NBP[1]428*	0.0000	0.0110	0.0000	0.0147	0.0000	0.0140
NBP[1]454*	0.0000	0.0110	0.0000	0.0157	0.0000	0.0148
NBP[1]480*	0.0000	0.0111	0.0000	0.0170	0.0000	0.0159
NBP[1]505*	0.0000	0.0108	0.0000	0.0176	0.0000	0.0162
NBP[1]531*	0.0000	0.0104	0.0000	0.0180	0.0000	0.0165
NBP[1]557*	0.0000	0.0100	0.0000	0.0185	0.0000	0.0168
NBP[1]582*	0.0000	0.0096	0.0000	0.0188	0.0000	0.0169
NBP[1]608*	0.0000	0.0092	0.0000	0.0192	0.0000	0.0171
NBP[1]634*	0.0000	0.0090	0.0000	0.0199	0.0000	0.0177
NBP[1]659*	0.0000	0.0089	0.0000	0.0207	0.0000	0.0182

* Specified by user.

Material Stream: Pandhi-Gas (continued)

Fluid Package: Basis-1
Property Package: Peng-Robinson

COMPOSITION

Liquid Phase (continued)

Phase Fraction 0.0000

COMPONENTS	MOLAR FLOW (kgmole/h)	MOLE FRACTION	MASS FLOW (tonne/d)	MASS FRACTION	LIQUID VOLUME FLOW (m3/h)	LIQUID VOLUME FRACTION
NBP[1]685*	0.0000	0.0092	0.0000	0.0227	0.0000	0.0198
NBP[1]711*	0.0000	0.0096	0.0000	0.0249	0.0000	0.0216
NBP[1]736*	0.0000	0.0095	0.0000	0.0258	0.0000	0.0221
NBP[1]762*	0.0000	0.0093	0.0000	0.0263	0.0000	0.0225
NBP[1]788*	0.0000	0.0089	0.0000	0.0267	0.0000	0.0226
NBP[1]825*	0.0000	0.0149	0.0000	0.0481	0.0000	0.0404
NBP[1]873*	0.0000	0.0103	0.0000	0.0359	0.0000	0.0298
NBP[1]926*	0.0000	0.0081	0.0000	0.0305	0.0000	0.0250
NBP[1]978*	0.0000	0.0083	0.0000	0.0343	0.0000	0.0277
NBP[1]1021*	0.0000	0.0041	0.0000	0.0179	0.0000	0.0143
NBP[1]1075*	0.0000	0.0025	0.0000	0.0117	0.0000	0.0093
NBP[1]1123*	0.0000	0.0023	0.0000	0.0116	0.0000	0.0091
NBP[1]1173*	0.0000	0.0017	0.0000	0.0088	0.0000	0.0069
NBP[1]1250*	0.0000	0.0022	0.0000	0.0125	0.0000	0.0096
NBP[1]1339*	0.0000	0.0020	0.0000	0.0130	0.0000	0.0098
NBP[1]1432*	0.0000	0.0014	0.0000	0.0100	0.0000	0.0074
NBP[1]1528*	0.0000	0.0010	0.0000	0.0076	0.0000	0.0055
NBP[1]1637*	0.0000	0.0007	0.0000	0.0056	0.0000	0.0041
NBP[1]1732*	0.0000	0.0006	0.0000	0.0048	0.0000	0.0034
NBP[1]1819*	0.0000	0.0005	0.0000	0.0047	0.0000	0.0034
NBP[1]1913*	0.0000	0.0000	0.0000	0.0000	0.0000	0.0000
Total	0.0000	1.0000	0.0000	1.0000	0.0000	1.0000

Aqueous Phase

Phase Fraction 0.0000

COMPONENTS	MOLAR FLOW (kgmole/h)	MOLE FRACTION	MASS FLOW (tonne/d)	MASS FRACTION	LIQUID VOLUME FLOW (m3/h)	LIQUID VOLUME FRACTION
Methane	0.0000	0.0000	0.0000	0.0000	0.0000	0.0000
Ethane	0.0000	0.0000	0.0000	0.0000	0.0000	0.0000
Propane	0.0000	0.0000	0.0000	0.0000	0.0000	0.0000
i-Butane	0.0000	0.0000	0.0000	0.0000	0.0000	0.0000
n-Butane	0.0000	0.0000	0.0000	0.0000	0.0000	0.0000
i-Pentane	0.0000	0.0000	0.0000	0.0000	0.0000	0.0000
n-Pentane	0.0000	0.0000	0.0000	0.0000	0.0000	0.0000
n-Hexane	0.0000	0.0000	0.0000	0.0000	0.0000	0.0000
Nitrogen	0.0000	0.0000	0.0000	0.0000	0.0000	0.0000
CO2	0.0000	0.0004	0.0000	0.0010	0.0000	0.0012
H2S	0.0000	0.0000	0.0000	0.0000	0.0000	0.0000
H2O	0.0000	0.9996	0.0000	0.9990	0.0000	0.9988
NBP[1]95*	0.0000	0.0000	0.0000	0.0000	0.0000	0.0000
NBP[1]121*	0.0000	0.0000	0.0000	0.0000	0.0000	0.0000
NBP[1]147*	0.0000	0.0000	0.0000	0.0000	0.0000	0.0000
NBP[1]171*	0.0000	0.0000	0.0000	0.0000	0.0000	0.0000
NBP[1]195*	0.0000	0.0000	0.0000	0.0000	0.0000	0.0000
NBP[1]222*	0.0000	0.0000	0.0000	0.0000	0.0000	0.0000
NBP[1]248*	0.0000	0.0000	0.0000	0.0000	0.0000	0.0000
NBP[1]273*	0.0000	0.0000	0.0000	0.0000	0.0000	0.0000
NBP[1]299*	0.0000	0.0000	0.0000	0.0000	0.0000	0.0000
NBP[1]325*	0.0000	0.0000	0.0000	0.0000	0.0000	0.0000
NBP[1]351*	0.0000	0.0000	0.0000	0.0000	0.0000	0.0000
NBP[1]377*	0.0000	0.0000	0.0000	0.0000	0.0000	0.0000
NBP[1]402*	0.0000	0.0000	0.0000	0.0000	0.0000	0.0000
NBP[1]428*	0.0000	0.0000	0.0000	0.0000	0.0000	0.0000
NBP[1]454*	0.0000	0.0000	0.0000	0.0000	0.0000	0.0000
NBP[1]480*	0.0000	0.0000	0.0000	0.0000	0.0000	0.0000

* Specified by user.

Material Stream: Pandhi-Gas (continued)

Fluid Package: Basis-1
Property Package: Peng-Robinson

COMPOSITION

Aqueous Phase (continued)

Phase Fraction 0.0000

COMPONENTS	MOLAR FLOW (kgmole/h)	MOLE FRACTION	MASS FLOW (tonne/d)	MASS FRACTION	LIQUID VOLUME FLOW (m3/h)	LIQUID VOLUME FRACTION
NBP[1]505*	0.0000	0.0000	0.0000	0.0000	0.0000	0.0000
NBP[1]531*	0.0000	0.0000	0.0000	0.0000	0.0000	0.0000
NBP[1]557*	0.0000	0.0000	0.0000	0.0000	0.0000	0.0000
NBP[1]582*	0.0000	0.0000	0.0000	0.0000	0.0000	0.0000
NBP[1]608*	0.0000	0.0000	0.0000	0.0000	0.0000	0.0000
NBP[1]634*	0.0000	0.0000	0.0000	0.0000	0.0000	0.0000
NBP[1]659*	0.0000	0.0000	0.0000	0.0000	0.0000	0.0000
NBP[1]685*	0.0000	0.0000	0.0000	0.0000	0.0000	0.0000
NBP[1]711*	0.0000	0.0000	0.0000	0.0000	0.0000	0.0000
NBP[1]736*	0.0000	0.0000	0.0000	0.0000	0.0000	0.0000
NBP[1]762*	0.0000	0.0000	0.0000	0.0000	0.0000	0.0000
NBP[1]788*	0.0000	0.0000	0.0000	0.0000	0.0000	0.0000
NBP[1]825*	0.0000	0.0000	0.0000	0.0000	0.0000	0.0000
NBP[1]873*	0.0000	0.0000	0.0000	0.0000	0.0000	0.0000
NBP[1]926*	0.0000	0.0000	0.0000	0.0000	0.0000	0.0000
NBP[1]978*	0.0000	0.0000	0.0000	0.0000	0.0000	0.0000
NBP[1]1021*	0.0000	0.0000	0.0000	0.0000	0.0000	0.0000
NBP[1]1075*	0.0000	0.0000	0.0000	0.0000	0.0000	0.0000
NBP[1]1123*	0.0000	0.0000	0.0000	0.0000	0.0000	0.0000
NBP[1]1173*	0.0000	0.0000	0.0000	0.0000	0.0000	0.0000
NBP[1]1250*	0.0000	0.0000	0.0000	0.0000	0.0000	0.0000
NBP[1]1339*	0.0000	0.0000	0.0000	0.0000	0.0000	0.0000
NBP[1]1432*	0.0000	0.0000	0.0000	0.0000	0.0000	0.0000
NBP[1]1528*	0.0000	0.0000	0.0000	0.0000	0.0000	0.0000
NBP[1]1637*	0.0000	0.0000	0.0000	0.0000	0.0000	0.0000
NBP[1]1732*	0.0000	0.0000	0.0000	0.0000	0.0000	0.0000
NBP[1]1819*	0.0000	0.0000	0.0000	0.0000	0.0000	0.0000
NBP[1]1913*	0.0000	0.0000	0.0000	0.0000	0.0000	0.0000
Total	0.0000	1.0000	0.0000	1.0000	0.0000	1.0000

Material Stream: Pandhi-W

Fluid Package: Basis-1
Property Package: Peng-Robinson

CONDITIONS

		Overall	Vapour Phase	Liquid Phase	Aqueous Phase
Vapour / Phase Fraction		0.0000	0.0000	0.0000	1.0000
Temperature:	(F)	84.79	84.79	84.79	84.79
Pressure:	(psig)	445.0	445.0	445.0	445.0
Molar Flow	(MMSCFD)	2.135	0.0000	0.0000	2.135
Mass Flow	(tonne/d)	46.00	0.0000	0.0000	46.00
Std Ideal Liq Vol Flow	(barrel/day)	290.0	0.0000	0.0000	290.0
Molar Enthalpy	(kJ/kgmole)	-2.859e+005	-8.928e+004	-2.875e+005	-2.859e+005
Molar Entropy	(kJ/kgmole-C)	54.83	159.3	218.7	54.83
Heat Flow	(MMBtu/hr)	-28.81	0.0000	0.0000	-28.81
Liq Vol Flow @Std Cond	(barrel/day)	285.1 *	0.0000	0.0000	285.1

PROPERTIES

		Overall	Vapour Phase	Liquid Phase	Aqueous Phase
Molecular Weight		18.03	21.39	126.4	18.03
Molar Density	(kgmole/m3)	55.76	1.408	6.079	55.76
Mass Density	(kg/m3)	1005	30.10	768.1	1005
Act. Volume Flow	(barrel/day)	287.9	0.0000	0.0000	287.9
Mass Enthalpy	(kJ/kg)	-1.586e+004	-4175	-2275	-1.586e+004
Mass Entropy	(kJ/kg-C)	3.042	7.448	1.731	3.042

* Specified by user.

Material Stream: Pandhi-W (continued)

Fluid Package: Basis-1
Property Package: Peng-Robinson

PROPERTIES

	Overall	Vapour Phase	Liquid Phase	Aqueous Phase
Heat Capacity (kJ/kgmole-C)	77.64	47.13	253.8	77.64
Mass Heat Capacity (kJ/kg-C)	4.307	2.204	2.009	4.307
LHV Molar Basis (Std) (Btu/SCF)	1.809e-004	---	---	1.809e-004
LHV Mass Basis (Std) (kJ/kg)	8.858e-003	---	---	8.858e-003
Phase Fraction [Vol. Basis]	---	---	---	1.000
Phase Fraction [Mass Basis]	0.0000	0.0000	0.0000	1.000
Partial Pressure of CO2 (psig)	-14.70	---	---	---
Cost Based on Flow (Cost/s)	0.0000	0.0000	0.0000	0.0000
Act. Gas Flow (ACT_m3/h)	---	---	---	---
Avg. Liq. Density (kgmole/m3)	55.35	16.84	5.980	55.35
Specific Heat (kJ/kgmole-C)	77.64	47.13	253.8	77.64
Std. Gas Flow (STD_m3/h)	2514	0.0000	0.0000	2514
Std. Ideal Liq. Mass Density (kg/m3)	997.8	360.1	755.6	997.8
Act. Liq. Flow (barrel/day)	287.9	---	---	287.9
Z Factor	---	0.8953	0.2073	2.260e-002
Watson K	8.497	17.28	11.99	8.497
User Property	---	---	---	---
Partial Pressure of H2S (psig)	-14.70	---	---	---
Cp/(Cp - R)	1.120	1.214	1.034	1.120
Cp/Cv	1.149	1.388	1.034	1.149
Heat of Vap. (kJ/kgmole)	3.304e+004	---	---	---
Kinematic Viscosity (cSt)	0.8047	0.3993	12.25	0.8047
Liq. Mass Density (Std. Cond) (kg/m3)	1015	0.9081	781.8	1015
Liq. Vol. Flow (Std. Cond) (barrel/day)	285.1	0.0000	0.0000	285.1
Liquid Fraction	1.000	0.0000	1.000	1.000
Molar Volume (m3/kgmole)	1.793e-002	0.7104	0.1645	1.793e-002
Mass Heat of Vap. (kJ/kg)	1833	---	---	---
Phase Fraction [Molar Basis]	0.0000	0.0000	0.0000	1.0000
Surface Tension (dyne/cm)	71.32	---	15.96	71.32
Thermal Conductivity (W/m-K)	0.6173	3.302e-002	0.1006	0.6173
Viscosity (cP)	0.8089	1.202e-002	9.409	0.8089
Cv (Semi-Ideal) (kJ/kgmole-C)	69.33	38.81	245.5	69.33
Mass Cv (Semi-Ideal) (kJ/kg-C)	3.846	1.815	1.943	3.846
Cv (kJ/kgmole-C)	67.56	33.96	245.5	67.56
Mass Cv (kJ/kg-C)	3.748	1.588	1.943	3.748
Cv (Ent. Method) (kJ/kgmole-C)	66.88	-3697	---	66.88
Mass Cv (Ent. Method) (kJ/kg-C)	3.711	-172.9	---	3.711
Cp/Cv (Ent. Method)	1.161	-1.275e-002	---	1.161
Reid VP at 37.8 C (psig)	---	---	97.87	---
True VP at 37.8 C (psig)	17.11	3607	475.9	17.11
Liq. Vol. Flow - Sum(Std. Cond) (barrel/day)	285.1	0.0000	0.0000	285.1
HHV Molar Basis (Std) (Btu/SCF)	46.45	---	---	46.45
HHV Mass Basis (Std) (kJ/kg)	2274	---	---	2274
CO2 Loading	---	---	---	---
CO2 App ML Con (kgmole/m3)	2.216e-002	---	---	2.216e-002
CO2 App WT Con (kgmol/kg)	2.204e-005	---	---	2.204e-005
Phase Fraction [Act. Vol. Basis]	0.0000	0.0000	0.0000	1.000
Mass Exergy (kJ/kg)	3.750	---	---	---
Viscosity Index	9.106e-002	---	---	---
Ideal Gas Cp/Cv	1.329	1.249	1.043	1.329
Ideal Gas Cp (kJ/kgmole-C)	33.60	41.72	200.0	33.60
Mass Ideal Gas Cp (kJ/kg-C)	1.864	1.951	1.583	1.864
Bubble Point Pressure (psig)	12.46	---	---	---

* Specified by user.

Material Stream: Pandhi-W (continued)

Fluid Package: Basis-1
Property Package: Peng-Robinson

COMPOSITION

Overall Phase

Vapour Fraction 0.0000

COMPONENTS	MOLAR FLOW (kgmole/h)	MOLE FRACTION	MASS FLOW (tonne/d)	MASS FRACTION	LIQUID VOLUME FLOW (m3/h)	LIQUID VOLUME FRACTION
Methane	0.0000	0.0000	0.0000	0.0000	0.0000	0.0000
Ethane	0.0000	0.0000	0.0000	0.0000	0.0000	0.0000
Propane	0.0000	0.0000	0.0000	0.0000	0.0000	0.0000
i-Butane	0.0000	0.0000	0.0000	0.0000	0.0000	0.0000
n-Butane	0.0000	0.0000	0.0000	0.0000	0.0000	0.0000
i-Pentane	0.0000	0.0000	0.0000	0.0000	0.0000	0.0000
n-Pentane	0.0000	0.0000	0.0000	0.0000	0.0000	0.0000
n-Hexane	0.0000	0.0000	0.0000	0.0000	0.0000	0.0000
Nitrogen	0.0008	0.0000	0.0006	0.0000	0.0000	0.0000
CO2	0.0423	0.0004	0.0446	0.0010	0.0023	0.0012
H2S	0.0000	0.0000	0.0000	0.0000	0.0000	0.0000
H2O	106.2938	0.9996	45.9575	0.9990	1.9188	0.9988
NBP[1]95*	0.0000	0.0000	0.0000	0.0000	0.0000	0.0000
NBP[1]121*	0.0000	0.0000	0.0000	0.0000	0.0000	0.0000
NBP[1]147*	0.0000	0.0000	0.0000	0.0000	0.0000	0.0000
NBP[1]171*	0.0000	0.0000	0.0000	0.0000	0.0000	0.0000
NBP[1]195*	0.0000	0.0000	0.0000	0.0000	0.0000	0.0000
NBP[1]222*	0.0000	0.0000	0.0000	0.0000	0.0000	0.0000
NBP[1]248*	0.0000	0.0000	0.0000	0.0000	0.0000	0.0000
NBP[1]273*	0.0000	0.0000	0.0000	0.0000	0.0000	0.0000
NBP[1]299*	0.0000	0.0000	0.0000	0.0000	0.0000	0.0000
NBP[1]325*	0.0000	0.0000	0.0000	0.0000	0.0000	0.0000
NBP[1]351*	0.0000	0.0000	0.0000	0.0000	0.0000	0.0000
NBP[1]377*	0.0000	0.0000	0.0000	0.0000	0.0000	0.0000
NBP[1]402*	0.0000	0.0000	0.0000	0.0000	0.0000	0.0000
NBP[1]428*	0.0000	0.0000	0.0000	0.0000	0.0000	0.0000
NBP[1]454*	0.0000	0.0000	0.0000	0.0000	0.0000	0.0000
NBP[1]480*	0.0000	0.0000	0.0000	0.0000	0.0000	0.0000
NBP[1]505*	0.0000	0.0000	0.0000	0.0000	0.0000	0.0000
NBP[1]531*	0.0000	0.0000	0.0000	0.0000	0.0000	0.0000
NBP[1]557*	0.0000	0.0000	0.0000	0.0000	0.0000	0.0000
NBP[1]582*	0.0000	0.0000	0.0000	0.0000	0.0000	0.0000
NBP[1]608*	0.0000	0.0000	0.0000	0.0000	0.0000	0.0000
NBP[1]634*	0.0000	0.0000	0.0000	0.0000	0.0000	0.0000
NBP[1]659*	0.0000	0.0000	0.0000	0.0000	0.0000	0.0000
NBP[1]685*	0.0000	0.0000	0.0000	0.0000	0.0000	0.0000
NBP[1]711*	0.0000	0.0000	0.0000	0.0000	0.0000	0.0000
NBP[1]736*	0.0000	0.0000	0.0000	0.0000	0.0000	0.0000
NBP[1]762*	0.0000	0.0000	0.0000	0.0000	0.0000	0.0000
NBP[1]788*	0.0000	0.0000	0.0000	0.0000	0.0000	0.0000
NBP[1]825*	0.0000	0.0000	0.0000	0.0000	0.0000	0.0000
NBP[1]873*	0.0000	0.0000	0.0000	0.0000	0.0000	0.0000
NBP[1]926*	0.0000	0.0000	0.0000	0.0000	0.0000	0.0000
NBP[1]978*	0.0000	0.0000	0.0000	0.0000	0.0000	0.0000
NBP[1]1021*	0.0000	0.0000	0.0000	0.0000	0.0000	0.0000
NBP[1]1075*	0.0000	0.0000	0.0000	0.0000	0.0000	0.0000
NBP[1]1123*	0.0000	0.0000	0.0000	0.0000	0.0000	0.0000
NBP[1]1173*	0.0000	0.0000	0.0000	0.0000	0.0000	0.0000
NBP[1]1250*	0.0000	0.0000	0.0000	0.0000	0.0000	0.0000
NBP[1]1339*	0.0000	0.0000	0.0000	0.0000	0.0000	0.0000
NBP[1]1432*	0.0000	0.0000	0.0000	0.0000	0.0000	0.0000
NBP[1]1528*	0.0000	0.0000	0.0000	0.0000	0.0000	0.0000
NBP[1]1637*	0.0000	0.0000	0.0000	0.0000	0.0000	0.0000
NBP[1]1732*	0.0000	0.0000	0.0000	0.0000	0.0000	0.0000

* Specified by user.

Material Stream: Pandhi-W (continued)

Fluid Package: Basis-1
Property Package: Peng-Robinson

COMPOSITION

Overall Phase (continued)

Vapour Fraction 0.0000

COMPONENTS	MOLAR FLOW (kgmole/h)	MOLE FRACTION	MASS FLOW (tonne/d)	MASS FRACTION	LIQUID VOLUME FLOW (m3/h)	LIQUID VOLUME FRACTION
NBP[1]1819*	0.0000	0.0000	0.0000	0.0000	0.0000	0.0000
NBP[1]1913*	0.0000	0.0000	0.0000	0.0000	0.0000	0.0000
Total	106.3369	1.0000	46.0026	1.0000	1.9210	1.0000

Vapour Phase

Phase Fraction 0.0000

COMPONENTS	MOLAR FLOW (kgmole/h)	MOLE FRACTION	MASS FLOW (tonne/d)	MASS FRACTION	LIQUID VOLUME FLOW (m3/h)	LIQUID VOLUME FRACTION
Methane	0.0000	0.7649	0.0000	0.5738	0.0000	0.6901
Ethane	0.0000	0.1032	0.0000	0.1451	0.0000	0.1469
Propane	0.0000	0.0507	0.0000	0.1046	0.0000	0.0743
i-Butane	0.0000	0.0059	0.0000	0.0161	0.0000	0.0103
n-Butane	0.0000	0.0108	0.0000	0.0292	0.0000	0.0181
i-Pentane	0.0000	0.0017	0.0000	0.0058	0.0000	0.0034
n-Pentane	0.0000	0.0017	0.0000	0.0059	0.0000	0.0033
n-Hexane	0.0000	0.0014	0.0000	0.0056	0.0000	0.0030
Nitrogen	0.0000	0.0208	0.0000	0.0272	0.0000	0.0122
CO2	0.0000	0.0341	0.0000	0.0701	0.0000	0.0306
H2S	0.0000	0.0000	0.0000	0.0000	0.0000	0.0000
H2O	0.0000	0.0015	0.0000	0.0012	0.0000	0.0004
NBP[1]95*	0.0000	0.0005	0.0000	0.0017	0.0000	0.0009
NBP[1]121*	0.0000	0.0005	0.0000	0.0017	0.0000	0.0009
NBP[1]147*	0.0000	0.0005	0.0000	0.0018	0.0000	0.0009
NBP[1]171*	0.0000	0.0006	0.0000	0.0027	0.0000	0.0013
NBP[1]195*	0.0000	0.0006	0.0000	0.0026	0.0000	0.0013
NBP[1]222*	0.0000	0.0003	0.0000	0.0013	0.0000	0.0006
NBP[1]248*	0.0000	0.0001	0.0000	0.0007	0.0000	0.0003
NBP[1]273*	0.0000	0.0001	0.0000	0.0004	0.0000	0.0002
NBP[1]299*	0.0000	0.0000	0.0000	0.0002	0.0000	0.0001
NBP[1]325*	0.0000	0.0000	0.0000	0.0001	0.0000	0.0000
NBP[1]351*	0.0000	0.0000	0.0000	0.0000	0.0000	0.0000
NBP[1]377*	0.0000	0.0000	0.0000	0.0000	0.0000	0.0000
NBP[1]402*	0.0000	0.0000	0.0000	0.0000	0.0000	0.0000
NBP[1]428*	0.0000	0.0000	0.0000	0.0000	0.0000	0.0000
NBP[1]454*	0.0000	0.0000	0.0000	0.0000	0.0000	0.0000
NBP[1]480*	0.0000	0.0000	0.0000	0.0000	0.0000	0.0000
NBP[1]505*	0.0000	0.0000	0.0000	0.0000	0.0000	0.0000
NBP[1]531*	0.0000	0.0000	0.0000	0.0000	0.0000	0.0000
NBP[1]557*	0.0000	0.0000	0.0000	0.0000	0.0000	0.0000
NBP[1]582*	0.0000	0.0000	0.0000	0.0000	0.0000	0.0000
NBP[1]608*	0.0000	0.0000	0.0000	0.0000	0.0000	0.0000
NBP[1]634*	0.0000	0.0000	0.0000	0.0000	0.0000	0.0000
NBP[1]659*	0.0000	0.0000	0.0000	0.0000	0.0000	0.0000
NBP[1]685*	0.0000	0.0000	0.0000	0.0000	0.0000	0.0000
NBP[1]711*	0.0000	0.0000	0.0000	0.0000	0.0000	0.0000
NBP[1]736*	0.0000	0.0000	0.0000	0.0000	0.0000	0.0000
NBP[1]762*	0.0000	0.0000	0.0000	0.0000	0.0000	0.0000
NBP[1]788*	0.0000	0.0000	0.0000	0.0000	0.0000	0.0000
NBP[1]825*	0.0000	0.0000	0.0000	0.0000	0.0000	0.0000
NBP[1]873*	0.0000	0.0000	0.0000	0.0000	0.0000	0.0000
NBP[1]926*	0.0000	0.0000	0.0000	0.0000	0.0000	0.0000
NBP[1]978*	0.0000	0.0000	0.0000	0.0000	0.0000	0.0000
NBP[1]1021*	0.0000	0.0000	0.0000	0.0000	0.0000	0.0000
NBP[1]1075*	0.0000	0.0000	0.0000	0.0000	0.0000	0.0000
NBP[1]1123*	0.0000	0.0000	0.0000	0.0000	0.0000	0.0000

* Specified by user.

Material Stream: Pandhi-W (continued)

Fluid Package: Basis-1
Property Package: Peng-Robinson

COMPOSITION

Vapour Phase (continued)

Phase Fraction 0.0000

COMPONENTS	MOLAR FLOW (kgmole/h)	MOLE FRACTION	MASS FLOW (tonne/d)	MASS FRACTION	LIQUID VOLUME FLOW (m3/h)	LIQUID VOLUME FRACTION
NBP[1]1173*	0.0000	0.0000	0.0000	0.0000	0.0000	0.0000
NBP[1]1250*	0.0000	0.0000	0.0000	0.0000	0.0000	0.0000
NBP[1]1339*	0.0000	0.0000	0.0000	0.0000	0.0000	0.0000
NBP[1]1432*	0.0000	0.0000	0.0000	0.0000	0.0000	0.0000
NBP[1]1528*	0.0000	0.0000	0.0000	0.0000	0.0000	0.0000
NBP[1]1637*	0.0000	0.0000	0.0000	0.0000	0.0000	0.0000
NBP[1]1732*	0.0000	0.0000	0.0000	0.0000	0.0000	0.0000
NBP[1]1819*	0.0000	0.0000	0.0000	0.0000	0.0000	0.0000
NBP[1]1913*	0.0000	0.0000	0.0000	0.0023	0.0000	0.0008
Total	0.0000	1.0000	0.0000	1.0000	0.0000	1.0000

Liquid Phase

Phase Fraction 0.0000

COMPONENTS	MOLAR FLOW (kgmole/h)	MOLE FRACTION	MASS FLOW (tonne/d)	MASS FRACTION	LIQUID VOLUME FLOW (m3/h)	LIQUID VOLUME FRACTION
Methane	0.0000	0.1136	0.0000	0.0144	0.0000	0.0364
Ethane	0.0000	0.0644	0.0000	0.0153	0.0000	0.0326
Propane	0.0000	0.0942	0.0000	0.0329	0.0000	0.0490
i-Butane	0.0000	0.0248	0.0000	0.0114	0.0000	0.0154
n-Butane	0.0000	0.0600	0.0000	0.0276	0.0000	0.0357
i-Pentane	0.0000	0.0217	0.0000	0.0124	0.0000	0.0150
n-Pentane	0.0000	0.0278	0.0000	0.0159	0.0000	0.0191
n-Hexane	0.0000	0.0618	0.0000	0.0422	0.0000	0.0481
Nitrogen	0.0000	0.0013	0.0000	0.0003	0.0000	0.0003
CO2	0.0000	0.0134	0.0000	0.0047	0.0000	0.0043
H2S	0.0000	0.0000	0.0000	0.0000	0.0000	0.0000
H2O	0.0000	0.0006	0.0000	0.0001	0.0000	0.0001
NBP[1]95*	0.0000	0.0082	0.0000	0.0044	0.0000	0.0049
NBP[1]121*	0.0000	0.0116	0.0000	0.0067	0.0000	0.0073
NBP[1]147*	0.0000	0.0172	0.0000	0.0109	0.0000	0.0118
NBP[1]171*	0.0000	0.0365	0.0000	0.0253	0.0000	0.0269
NBP[1]195*	0.0000	0.0516	0.0000	0.0382	0.0000	0.0401
NBP[1]222*	0.0000	0.0408	0.0000	0.0325	0.0000	0.0337
NBP[1]248*	0.0000	0.0353	0.0000	0.0302	0.0000	0.0309
NBP[1]273*	0.0000	0.0291	0.0000	0.0266	0.0000	0.0270
NBP[1]299*	0.0000	0.0230	0.0000	0.0225	0.0000	0.0225
NBP[1]325*	0.0000	0.0168	0.0000	0.0175	0.0000	0.0173
NBP[1]351*	0.0000	0.0137	0.0000	0.0151	0.0000	0.0148
NBP[1]377*	0.0000	0.0126	0.0000	0.0148	0.0000	0.0144
NBP[1]402*	0.0000	0.0116	0.0000	0.0145	0.0000	0.0139
NBP[1]428*	0.0000	0.0110	0.0000	0.0147	0.0000	0.0140
NBP[1]454*	0.0000	0.0110	0.0000	0.0157	0.0000	0.0148
NBP[1]480*	0.0000	0.0111	0.0000	0.0170	0.0000	0.0159
NBP[1]505*	0.0000	0.0108	0.0000	0.0176	0.0000	0.0162
NBP[1]531*	0.0000	0.0104	0.0000	0.0180	0.0000	0.0165
NBP[1]557*	0.0000	0.0100	0.0000	0.0185	0.0000	0.0168
NBP[1]582*	0.0000	0.0096	0.0000	0.0188	0.0000	0.0169
NBP[1]608*	0.0000	0.0092	0.0000	0.0192	0.0000	0.0171
NBP[1]634*	0.0000	0.0090	0.0000	0.0199	0.0000	0.0177
NBP[1]659*	0.0000	0.0089	0.0000	0.0207	0.0000	0.0182
NBP[1]685*	0.0000	0.0092	0.0000	0.0227	0.0000	0.0198
NBP[1]711*	0.0000	0.0096	0.0000	0.0249	0.0000	0.0216
NBP[1]736*	0.0000	0.0095	0.0000	0.0258	0.0000	0.0221
NBP[1]762*	0.0000	0.0093	0.0000	0.0263	0.0000	0.0225
NBP[1]788*	0.0000	0.0089	0.0000	0.0267	0.0000	0.0226

* Specified by user.

Material Stream: Pandhi-W (continued)

Fluid Package: Basis-1
Property Package: Peng-Robinson

COMPOSITION

Liquid Phase (continued)

Phase Fraction 0.0000

COMPONENTS	MOLAR FLOW (kgmole/h)	MOLE FRACTION	MASS FLOW (tonne/d)	MASS FRACTION	LIQUID VOLUME FLOW (m3/h)	LIQUID VOLUME FRACTION
NBP[1]825*	0.0000	0.0149	0.0000	0.0481	0.0000	0.0404
NBP[1]873*	0.0000	0.0103	0.0000	0.0359	0.0000	0.0298
NBP[1]926*	0.0000	0.0081	0.0000	0.0305	0.0000	0.0250
NBP[1]978*	0.0000	0.0083	0.0000	0.0343	0.0000	0.0277
NBP[1]1021*	0.0000	0.0041	0.0000	0.0179	0.0000	0.0143
NBP[1]1075*	0.0000	0.0025	0.0000	0.0117	0.0000	0.0093
NBP[1]1123*	0.0000	0.0023	0.0000	0.0116	0.0000	0.0091
NBP[1]1173*	0.0000	0.0017	0.0000	0.0088	0.0000	0.0069
NBP[1]1250*	0.0000	0.0022	0.0000	0.0125	0.0000	0.0096
NBP[1]1339*	0.0000	0.0020	0.0000	0.0130	0.0000	0.0098
NBP[1]1432*	0.0000	0.0014	0.0000	0.0100	0.0000	0.0074
NBP[1]1528*	0.0000	0.0010	0.0000	0.0076	0.0000	0.0055
NBP[1]1637*	0.0000	0.0007	0.0000	0.0056	0.0000	0.0041
NBP[1]1732*	0.0000	0.0006	0.0000	0.0048	0.0000	0.0034
NBP[1]1819*	0.0000	0.0005	0.0000	0.0047	0.0000	0.0034
NBP[1]1913*	0.0000	0.0000	0.0000	0.0000	0.0000	0.0000
Total	0.0000	1.0000	0.0000	1.0000	0.0000	1.0000

Aqueous Phase

Phase Fraction 1.000

COMPONENTS	MOLAR FLOW (kgmole/h)	MOLE FRACTION	MASS FLOW (tonne/d)	MASS FRACTION	LIQUID VOLUME FLOW (m3/h)	LIQUID VOLUME FRACTION
Methane	0.0000	0.0000	0.0000	0.0000	0.0000	0.0000
Ethane	0.0000	0.0000	0.0000	0.0000	0.0000	0.0000
Propane	0.0000	0.0000	0.0000	0.0000	0.0000	0.0000
i-Butane	0.0000	0.0000	0.0000	0.0000	0.0000	0.0000
n-Butane	0.0000	0.0000	0.0000	0.0000	0.0000	0.0000
i-Pentane	0.0000	0.0000	0.0000	0.0000	0.0000	0.0000
n-Pentane	0.0000	0.0000	0.0000	0.0000	0.0000	0.0000
n-Hexane	0.0000	0.0000	0.0000	0.0000	0.0000	0.0000
Nitrogen	0.0008	0.0000	0.0006	0.0000	0.0000	0.0000
CO2	0.0423	0.0004	0.0446	0.0010	0.0023	0.0012
H2S	0.0000	0.0000	0.0000	0.0000	0.0000	0.0000
H2O	106.2938	0.9996	45.9575	0.9990	1.9188	0.9988
NBP[1]95*	0.0000	0.0000	0.0000	0.0000	0.0000	0.0000
NBP[1]121*	0.0000	0.0000	0.0000	0.0000	0.0000	0.0000
NBP[1]147*	0.0000	0.0000	0.0000	0.0000	0.0000	0.0000
NBP[1]171*	0.0000	0.0000	0.0000	0.0000	0.0000	0.0000
NBP[1]195*	0.0000	0.0000	0.0000	0.0000	0.0000	0.0000
NBP[1]222*	0.0000	0.0000	0.0000	0.0000	0.0000	0.0000
NBP[1]248*	0.0000	0.0000	0.0000	0.0000	0.0000	0.0000
NBP[1]273*	0.0000	0.0000	0.0000	0.0000	0.0000	0.0000
NBP[1]299*	0.0000	0.0000	0.0000	0.0000	0.0000	0.0000
NBP[1]325*	0.0000	0.0000	0.0000	0.0000	0.0000	0.0000
NBP[1]351*	0.0000	0.0000	0.0000	0.0000	0.0000	0.0000
NBP[1]377*	0.0000	0.0000	0.0000	0.0000	0.0000	0.0000
NBP[1]402*	0.0000	0.0000	0.0000	0.0000	0.0000	0.0000
NBP[1]428*	0.0000	0.0000	0.0000	0.0000	0.0000	0.0000
NBP[1]454*	0.0000	0.0000	0.0000	0.0000	0.0000	0.0000
NBP[1]480*	0.0000	0.0000	0.0000	0.0000	0.0000	0.0000
NBP[1]505*	0.0000	0.0000	0.0000	0.0000	0.0000	0.0000
NBP[1]531*	0.0000	0.0000	0.0000	0.0000	0.0000	0.0000
NBP[1]557*	0.0000	0.0000	0.0000	0.0000	0.0000	0.0000
NBP[1]582*	0.0000	0.0000	0.0000	0.0000	0.0000	0.0000
NBP[1]608*	0.0000	0.0000	0.0000	0.0000	0.0000	0.0000

* Specified by user.

Material Stream: Pandhi-W (continued)

Fluid Package: Basis-1
Property Package: Peng-Robinson

COMPOSITION

Aqueous Phase (continued)

Phase Fraction 1.000

COMPONENTS	MOLAR FLOW (kgmole/h)	MOLE FRACTION	MASS FLOW (tonne/d)	MASS FRACTION	LIQUID VOLUME FLOW (m3/h)	LIQUID VOLUME FRACTION
NBP[1]634*	0.0000	0.0000	0.0000	0.0000	0.0000	0.0000
NBP[1]659*	0.0000	0.0000	0.0000	0.0000	0.0000	0.0000
NBP[1]685*	0.0000	0.0000	0.0000	0.0000	0.0000	0.0000
NBP[1]711*	0.0000	0.0000	0.0000	0.0000	0.0000	0.0000
NBP[1]736*	0.0000	0.0000	0.0000	0.0000	0.0000	0.0000
NBP[1]762*	0.0000	0.0000	0.0000	0.0000	0.0000	0.0000
NBP[1]788*	0.0000	0.0000	0.0000	0.0000	0.0000	0.0000
NBP[1]825*	0.0000	0.0000	0.0000	0.0000	0.0000	0.0000
NBP[1]873*	0.0000	0.0000	0.0000	0.0000	0.0000	0.0000
NBP[1]926*	0.0000	0.0000	0.0000	0.0000	0.0000	0.0000
NBP[1]978*	0.0000	0.0000	0.0000	0.0000	0.0000	0.0000
NBP[1]1021*	0.0000	0.0000	0.0000	0.0000	0.0000	0.0000
NBP[1]1075*	0.0000	0.0000	0.0000	0.0000	0.0000	0.0000
NBP[1]1123*	0.0000	0.0000	0.0000	0.0000	0.0000	0.0000
NBP[1]1173*	0.0000	0.0000	0.0000	0.0000	0.0000	0.0000
NBP[1]1250*	0.0000	0.0000	0.0000	0.0000	0.0000	0.0000
NBP[1]1339*	0.0000	0.0000	0.0000	0.0000	0.0000	0.0000
NBP[1]1432*	0.0000	0.0000	0.0000	0.0000	0.0000	0.0000
NBP[1]1528*	0.0000	0.0000	0.0000	0.0000	0.0000	0.0000
NBP[1]1637*	0.0000	0.0000	0.0000	0.0000	0.0000	0.0000
NBP[1]1732*	0.0000	0.0000	0.0000	0.0000	0.0000	0.0000
NBP[1]1819*	0.0000	0.0000	0.0000	0.0000	0.0000	0.0000
NBP[1]1913*	0.0000	0.0000	0.0000	0.0000	0.0000	0.0000
Total	106.3369	1.0000	46.0026	1.0000	1.9210	1.0000

Material Stream: Pandhi-Water

Fluid Package: Basis-1
Property Package: Peng-Robinson

CONDITIONS

		Overall	Vapour Phase	Liquid Phase	Aqueous Phase
Vapour / Phase Fraction		0.0000	0.0000	0.0000	1.0000
Temperature:	(F)	134.8	134.8	134.8	134.8
Pressure:	(psig)	645.0	645.0	645.0	645.0
Molar Flow	(MMSCFD)	2.118	0.0000	0.0000	2.118
Mass Flow	(tonne/d)	45.63	0.0000	0.0000	45.63
Std Ideal Liq Vol Flow	(barrel/day)	287.6	0.0000	0.0000	287.6
Molar Enthalpy	(kJ/kgmole)	-2.837e+005	-8.943e+004	-3.053e+005	-2.837e+005
Molar Entropy	(kJ/kgmole-C)	61.63	159.9	268.8	61.63
Heat Flow	(MMBtu/hr)	-28.36	0.0000	0.0000	-28.36
Liq Vol Flow @Std Cond	(barrel/day)	282.7 *	0.0000	0.0000	282.7

PROPERTIES

		Overall	Vapour Phase	Liquid Phase	Aqueous Phase
Molecular Weight		18.02	21.91	138.7	18.02
Molar Density	(kgmole/m3)	54.61	1.869	5.479	54.61
Mass Density	(kg/m3)	984.4	40.96	760.0	984.4
Act. Volume Flow	(barrel/day)	291.5	0.0000	0.0000	291.5
Mass Enthalpy	(kJ/kg)	-1.574e+004	-4081	-2201	-1.574e+004
Mass Entropy	(kJ/kg-C)	3.419	7.296	1.938	3.419
Heat Capacity	(kJ/kgmole-C)	77.83	50.96	293.3	77.83
Mass Heat Capacity	(kJ/kg-C)	4.318	2.326	2.114	4.318
LHV Molar Basis (Std)	(Btu/SCF)	9.264e-004	---	---	9.264e-004
LHV Mass Basis (Std)	(kJ/kg)	4.536e-002	---	---	4.536e-002
Phase Fraction [Vol. Basis]		---	---	---	1.000

* Specified by user.

Material Stream: Pandhi-Water (continued)

Fluid Package: Basis-1
Property Package: Peng-Robinson

PROPERTIES

	Overall	Vapour Phase	Liquid Phase	Aqueous Phase
Phase Fraction [Mass Basis]	0.0000	0.0000	0.0000	1.000
Partial Pressure of CO2 (psig)	-14.70	---	---	---
Cost Based on Flow (Cost/s)	0.0000	0.0000	0.0000	0.0000
Act. Gas Flow (ACT_m3/h)	---	---	---	---
Avg. Liq. Density (kgmole/m3)	55.36	16.71	5.574	55.36
Specific Heat (kJ/kgmole-C)	77.83	50.96	293.3	77.83
Std. Gas Flow (STD_m3/h)	2494	0.0000	0.0000	2494
Std. Ideal Liq. Mass Density (kg/m3)	997.8	366.2	773.2	997.8
Act. Liq. Flow (barrel/day)	291.5	---	---	291.5
Z Factor	---	0.8861	0.3023	3.033e-002
Watson K	8.500	17.11	11.91	8.500
User Property	---	---	---	---
Partial Pressure of H2S (psig)	-14.70	---	---	---
Cp/(Cp - R)	1.120	1.195	1.029	1.120
Cp/Cv	1.161	1.388	1.209	1.161
Heat of Vap. (kJ/kgmole)	3.090e+004	---	---	---
Kinematic Viscosity (cSt)	0.4919	0.3258	1.205	0.4919
Liq. Mass Density (Std. Cond) (kg/m3)	1015	0.9307	799.1	1015
Liq. Vol. Flow (Std. Cond) (barrel/day)	282.7	0.0000	0.0000	282.7
Liquid Fraction	1.000	0.0000	1.000	1.000
Molar Volume (m3/kgmole)	1.831e-002	0.5350	0.1825	1.831e-002
Mass Heat of Vap. (kJ/kg)	1714	---	---	---
Phase Fraction [Molar Basis]	0.0000	0.0000	0.0000	1.0000
Surface Tension (dyne/cm)	66.45	---	14.67	66.45
Thermal Conductivity (W/m-K)	0.6507	3.754e-002	9.689e-002	0.6507
Viscosity (cP)	0.4842	1.335e-002	0.9160	0.4842
Cv (Semi-Ideal) (kJ/kgmole-C)	69.52	42.65	284.9	69.52
Mass Cv (Semi-Ideal) (kJ/kg-C)	3.857	1.946	2.054	3.857
Cv (kJ/kgmole-C)	67.01	36.71	242.7	67.01
Mass Cv (kJ/kg-C)	3.718	1.675	1.749	3.718
Cv (Ent. Method) (kJ/kgmole-C)	65.75	-4152	---	65.75
Mass Cv (Ent. Method) (kJ/kg-C)	3.648	-189.5	---	3.648
Cp/Cv (Ent. Method)	1.184	-1.228e-002	---	1.184
Reid VP at 37.8 C (psig)	---	---	97.93	---
True VP at 37.8 C (psig)	169.7	5197	567.4	169.7
Liq. Vol. Flow - Sum(Std. Cond) (barrel/day)	282.7	0.0000	0.0000	282.7
HHV Molar Basis (Std) (Btu/SCF)	46.45	---	---	46.45
HHV Mass Basis (Std) (kJ/kg)	2275	---	---	2275
CO2 Loading	---	---	---	---
CO2 App ML Con (kgmole/m3)	1.824e-002	---	---	1.824e-002
CO2 App WT Con (kgmol/kg)	1.853e-005	---	---	1.853e-005
Phase Fraction [Act. Vol. Basis]	0.0000	0.0000	0.0000	1.000
Mass Exergy (kJ/kg)	12.23	---	---	---
Viscosity Index	-8.824	---	---	---
Ideal Gas Cp/Cv	1.327	1.231	1.036	1.327
Ideal Gas Cp (kJ/kgmole-C)	33.77	44.30	236.5	33.77
Mass Ideal Gas Cp (kJ/kg-C)	1.874	2.022	1.705	1.874
Bubble Point Pressure (psig)	126.1	---	---	---

COMPOSITION

Overall Phase

Vapour Fraction 0.0000

COMPONENTS	MOLAR FLOW (kgmole/h)	MOLE FRACTION	MASS FLOW (tonne/d)	MASS FRACTION	LIQUID VOLUME FLOW (m3/h)	LIQUID VOLUME FRACTION
Methane	0.0001	0.0000	0.0000	0.0000	0.0000	0.0000
Ethane	0.0000	0.0000	0.0000	0.0000	0.0000	0.0000
Propane	0.0000	0.0000	0.0000	0.0000	0.0000	0.0000

Licensed to: PETROCHEMICAL ENGINEERIN
* Specified by user.

Material Stream: Pandhi-Water (continued)

Fluid Package: Basis-1
Property Package: Peng-Robinson

COMPOSITION

Overall Phase (continued)

Vapour Fraction 0.0000

COMPONENTS	MOLAR FLOW (kgmole/h)	MOLE FRACTION	MASS FLOW (tonne/d)	MASS FRACTION	LIQUID VOLUME FLOW (m3/h)	LIQUID VOLUME FRACTION
i-Butane	0.0000	0.0000	0.0000	0.0000	0.0000	0.0000
n-Butane	0.0000	0.0000	0.0000	0.0000	0.0000	0.0000
i-Pentane	0.0000	0.0000	0.0000	0.0000	0.0000	0.0000
n-Pentane	0.0000	0.0000	0.0000	0.0000	0.0000	0.0000
n-Hexane	0.0000	0.0000	0.0000	0.0000	0.0000	0.0000
Nitrogen	0.0009	0.0000	0.0006	0.0000	0.0000	0.0000
CO2	0.0352	0.0003	0.0372	0.0008	0.0019	0.0010
H2S	0.0000	0.0000	0.0000	0.0000	0.0000	0.0000
H2O	105.4393	0.9997	45.5880	0.9992	1.9033	0.9990
NBP[1]95*	0.0000	0.0000	0.0000	0.0000	0.0000	0.0000
NBP[1]121*	0.0000	0.0000	0.0000	0.0000	0.0000	0.0000
NBP[1]147*	0.0000	0.0000	0.0000	0.0000	0.0000	0.0000
NBP[1]171*	0.0000	0.0000	0.0000	0.0000	0.0000	0.0000
NBP[1]195*	0.0000	0.0000	0.0000	0.0000	0.0000	0.0000
NBP[1]222*	0.0000	0.0000	0.0000	0.0000	0.0000	0.0000
NBP[1]248*	0.0000	0.0000	0.0000	0.0000	0.0000	0.0000
NBP[1]273*	0.0000	0.0000	0.0000	0.0000	0.0000	0.0000
NBP[1]299*	0.0000	0.0000	0.0000	0.0000	0.0000	0.0000
NBP[1]325*	0.0000	0.0000	0.0000	0.0000	0.0000	0.0000
NBP[1]351*	0.0000	0.0000	0.0000	0.0000	0.0000	0.0000
NBP[1]377*	0.0000	0.0000	0.0000	0.0000	0.0000	0.0000
NBP[1]402*	0.0000	0.0000	0.0000	0.0000	0.0000	0.0000
NBP[1]428*	0.0000	0.0000	0.0000	0.0000	0.0000	0.0000
NBP[1]454*	0.0000	0.0000	0.0000	0.0000	0.0000	0.0000
NBP[1]480*	0.0000	0.0000	0.0000	0.0000	0.0000	0.0000
NBP[1]505*	0.0000	0.0000	0.0000	0.0000	0.0000	0.0000
NBP[1]531*	0.0000	0.0000	0.0000	0.0000	0.0000	0.0000
NBP[1]557*	0.0000	0.0000	0.0000	0.0000	0.0000	0.0000
NBP[1]582*	0.0000	0.0000	0.0000	0.0000	0.0000	0.0000
NBP[1]608*	0.0000	0.0000	0.0000	0.0000	0.0000	0.0000
NBP[1]634*	0.0000	0.0000	0.0000	0.0000	0.0000	0.0000
NBP[1]659*	0.0000	0.0000	0.0000	0.0000	0.0000	0.0000
NBP[1]685*	0.0000	0.0000	0.0000	0.0000	0.0000	0.0000
NBP[1]711*	0.0000	0.0000	0.0000	0.0000	0.0000	0.0000
NBP[1]736*	0.0000	0.0000	0.0000	0.0000	0.0000	0.0000
NBP[1]762*	0.0000	0.0000	0.0000	0.0000	0.0000	0.0000
NBP[1]788*	0.0000	0.0000	0.0000	0.0000	0.0000	0.0000
NBP[1]825*	0.0000	0.0000	0.0000	0.0000	0.0000	0.0000
NBP[1]873*	0.0000	0.0000	0.0000	0.0000	0.0000	0.0000
NBP[1]926*	0.0000	0.0000	0.0000	0.0000	0.0000	0.0000
NBP[1]978*	0.0000	0.0000	0.0000	0.0000	0.0000	0.0000
NBP[1]1021*	0.0000	0.0000	0.0000	0.0000	0.0000	0.0000
NBP[1]1075*	0.0000	0.0000	0.0000	0.0000	0.0000	0.0000
NBP[1]1123*	0.0000	0.0000	0.0000	0.0000	0.0000	0.0000
NBP[1]1173*	0.0000	0.0000	0.0000	0.0000	0.0000	0.0000
NBP[1]1250*	0.0000	0.0000	0.0000	0.0000	0.0000	0.0000
NBP[1]1339*	0.0000	0.0000	0.0000	0.0000	0.0000	0.0000
NBP[1]1432*	0.0000	0.0000	0.0000	0.0000	0.0000	0.0000
NBP[1]1528*	0.0000	0.0000	0.0000	0.0000	0.0000	0.0000
NBP[1]1637*	0.0000	0.0000	0.0000	0.0000	0.0000	0.0000
NBP[1]1732*	0.0000	0.0000	0.0000	0.0000	0.0000	0.0000
NBP[1]1819*	0.0000	0.0000	0.0000	0.0000	0.0000	0.0000
NBP[1]1913*	0.0000	0.0000	0.0000	0.0000	0.0000	0.0000
Total	105.4755	1.0000	45.6258	1.0000	1.9052	1.0000

* Specified by user.

Material Stream: Pandhi-Water (continued)

Fluid Package: Basis-1
Property Package: Peng-Robinson

COMPOSITION

Vapour Phase

Phase Fraction 0.0000

COMPONENTS	MOLAR FLOW (kgmole/h)	MOLE FRACTION	MASS FLOW (tonne/d)	MASS FRACTION	LIQUID VOLUME FLOW (m3/h)	LIQUID VOLUME FRACTION
Methane	0.0000	0.7538	0.0000	0.5519	0.0000	0.6750
Ethane	0.0000	0.1026	0.0000	0.1408	0.0000	0.1450
Propane	0.0000	0.0521	0.0000	0.1048	0.0000	0.0757
i-Butane	0.0000	0.0065	0.0000	0.0172	0.0000	0.0112
n-Butane	0.0000	0.0122	0.0000	0.0323	0.0000	0.0203
i-Pentane	0.0000	0.0023	0.0000	0.0075	0.0000	0.0044
n-Pentane	0.0000	0.0024	0.0000	0.0080	0.0000	0.0046
n-Hexane	0.0000	0.0026	0.0000	0.0103	0.0000	0.0057
Nitrogen	0.0000	0.0205	0.0000	0.0262	0.0000	0.0119
CO2	0.0000	0.0337	0.0000	0.0678	0.0000	0.0301
H2S	0.0000	0.0000	0.0000	0.0000	0.0000	0.0000
H2O	0.0000	0.0045	0.0000	0.0037	0.0000	0.0014
NBP[1]95*	0.0000	0.0007	0.0000	0.0023	0.0000	0.0012
NBP[1]121*	0.0000	0.0008	0.0000	0.0025	0.0000	0.0013
NBP[1]147*	0.0000	0.0008	0.0000	0.0030	0.0000	0.0016
NBP[1]171*	0.0000	0.0013	0.0000	0.0052	0.0000	0.0027
NBP[1]195*	0.0000	0.0014	0.0000	0.0059	0.0000	0.0030
NBP[1]222*	0.0000	0.0008	0.0000	0.0035	0.0000	0.0017
NBP[1]248*	0.0000	0.0004	0.0000	0.0022	0.0000	0.0011
NBP[1]273*	0.0000	0.0002	0.0000	0.0013	0.0000	0.0006
NBP[1]299*	0.0000	0.0001	0.0000	0.0007	0.0000	0.0004
NBP[1]325*	0.0000	0.0001	0.0000	0.0004	0.0000	0.0002
NBP[1]351*	0.0000	0.0000	0.0000	0.0002	0.0000	0.0001
NBP[1]377*	0.0000	0.0000	0.0000	0.0001	0.0000	0.0001
NBP[1]402*	0.0000	0.0000	0.0000	0.0001	0.0000	0.0000
NBP[1]428*	0.0000	0.0000	0.0000	0.0000	0.0000	0.0000
NBP[1]454*	0.0000	0.0000	0.0000	0.0000	0.0000	0.0000
NBP[1]480*	0.0000	0.0000	0.0000	0.0000	0.0000	0.0000
NBP[1]505*	0.0000	0.0000	0.0000	0.0000	0.0000	0.0000
NBP[1]531*	0.0000	0.0000	0.0000	0.0000	0.0000	0.0000
NBP[1]557*	0.0000	0.0000	0.0000	0.0000	0.0000	0.0000
NBP[1]582*	0.0000	0.0000	0.0000	0.0000	0.0000	0.0000
NBP[1]608*	0.0000	0.0000	0.0000	0.0000	0.0000	0.0000
NBP[1]634*	0.0000	0.0000	0.0000	0.0000	0.0000	0.0000
NBP[1]659*	0.0000	0.0000	0.0000	0.0000	0.0000	0.0000
NBP[1]685*	0.0000	0.0000	0.0000	0.0000	0.0000	0.0000
NBP[1]711*	0.0000	0.0000	0.0000	0.0000	0.0000	0.0000
NBP[1]736*	0.0000	0.0000	0.0000	0.0000	0.0000	0.0000
NBP[1]762*	0.0000	0.0000	0.0000	0.0000	0.0000	0.0000
NBP[1]788*	0.0000	0.0000	0.0000	0.0000	0.0000	0.0000
NBP[1]825*	0.0000	0.0000	0.0000	0.0000	0.0000	0.0000
NBP[1]873*	0.0000	0.0000	0.0000	0.0000	0.0000	0.0000
NBP[1]926*	0.0000	0.0000	0.0000	0.0000	0.0000	0.0000
NBP[1]978*	0.0000	0.0000	0.0000	0.0000	0.0000	0.0000
NBP[1]1021*	0.0000	0.0000	0.0000	0.0000	0.0000	0.0000
NBP[1]1075*	0.0000	0.0000	0.0000	0.0000	0.0000	0.0000
NBP[1]1123*	0.0000	0.0000	0.0000	0.0000	0.0000	0.0000
NBP[1]1173*	0.0000	0.0000	0.0000	0.0000	0.0000	0.0000
NBP[1]1250*	0.0000	0.0000	0.0000	0.0000	0.0000	0.0000
NBP[1]1339*	0.0000	0.0000	0.0000	0.0000	0.0000	0.0000
NBP[1]1432*	0.0000	0.0000	0.0000	0.0000	0.0000	0.0000
NBP[1]1528*	0.0000	0.0000	0.0000	0.0000	0.0000	0.0000
NBP[1]1637*	0.0000	0.0000	0.0000	0.0000	0.0000	0.0000
NBP[1]1732*	0.0000	0.0000	0.0000	0.0000	0.0000	0.0000

* Specified by user.

Material Stream: Pandhi-Water (continued)

Fluid Package: Basis-1
Property Package: Peng-Robinson

COMPOSITION

Vapour Phase (continued)

Phase Fraction 0.0000

COMPONENTS	MOLAR FLOW (kgmole/h)	MOLE FRACTION	MASS FLOW (tonne/d)	MASS FRACTION	LIQUID VOLUME FLOW (m3/h)	LIQUID VOLUME FRACTION
NBP[1]1819*	0.0000	0.0000	0.0000	0.0000	0.0000	0.0000
NBP[1]1913*	0.0000	0.0000	0.0000	0.0022	0.0000	0.0007
Total	0.0000	1.0000	0.0000	1.0000	0.0000	1.0000

Liquid Phase

Phase Fraction 0.0000

COMPONENTS	MOLAR FLOW (kgmole/h)	MOLE FRACTION	MASS FLOW (tonne/d)	MASS FRACTION	LIQUID VOLUME FLOW (m3/h)	LIQUID VOLUME FRACTION
Methane	0.0000	0.1359	0.0000	0.0157	0.0000	0.0406
Ethane	0.0000	0.0602	0.0000	0.0131	0.0000	0.0284
Propane	0.0000	0.0750	0.0000	0.0239	0.0000	0.0364
i-Butane	0.0000	0.0183	0.0000	0.0077	0.0000	0.0105
n-Butane	0.0000	0.0434	0.0000	0.0182	0.0000	0.0241
i-Pentane	0.0000	0.0159	0.0000	0.0082	0.0000	0.0102
n-Pentane	0.0000	0.0206	0.0000	0.0107	0.0000	0.0131
n-Hexane	0.0000	0.0518	0.0000	0.0322	0.0000	0.0375
Nitrogen	0.0000	0.0018	0.0000	0.0004	0.0000	0.0003
CO2	0.0000	0.0136	0.0000	0.0043	0.0000	0.0040
H2S	0.0000	0.0000	0.0000	0.0000	0.0000	0.0000
H2O	0.0000	0.0019	0.0000	0.0003	0.0000	0.0002
NBP[1]95*	0.0000	0.0061	0.0000	0.0030	0.0000	0.0034
NBP[1]121*	0.0000	0.0090	0.0000	0.0047	0.0000	0.0053
NBP[1]147*	0.0000	0.0141	0.0000	0.0081	0.0000	0.0090
NBP[1]171*	0.0000	0.0317	0.0000	0.0201	0.0000	0.0218
NBP[1]195*	0.0000	0.0478	0.0000	0.0322	0.0000	0.0346
NBP[1]222*	0.0000	0.0406	0.0000	0.0294	0.0000	0.0312
NBP[1]248*	0.0000	0.0371	0.0000	0.0289	0.0000	0.0303
NBP[1]273*	0.0000	0.0319	0.0000	0.0266	0.0000	0.0276
NBP[1]299*	0.0000	0.0261	0.0000	0.0232	0.0000	0.0238
NBP[1]325*	0.0000	0.0195	0.0000	0.0185	0.0000	0.0187
NBP[1]351*	0.0000	0.0162	0.0000	0.0163	0.0000	0.0163
NBP[1]377*	0.0000	0.0150	0.0000	0.0161	0.0000	0.0160
NBP[1]402*	0.0000	0.0139	0.0000	0.0159	0.0000	0.0156
NBP[1]428*	0.0000	0.0133	0.0000	0.0162	0.0000	0.0158
NBP[1]454*	0.0000	0.0133	0.0000	0.0173	0.0000	0.0167
NBP[1]480*	0.0000	0.0135	0.0000	0.0188	0.0000	0.0179
NBP[1]505*	0.0000	0.0131	0.0000	0.0194	0.0000	0.0184
NBP[1]531*	0.0000	0.0126	0.0000	0.0199	0.0000	0.0187
NBP[1]557*	0.0000	0.0122	0.0000	0.0204	0.0000	0.0190
NBP[1]582*	0.0000	0.0116	0.0000	0.0207	0.0000	0.0191
NBP[1]608*	0.0000	0.0112	0.0000	0.0212	0.0000	0.0194
NBP[1]634*	0.0000	0.0110	0.0000	0.0220	0.0000	0.0200
NBP[1]659*	0.0000	0.0108	0.0000	0.0229	0.0000	0.0206
NBP[1]685*	0.0000	0.0112	0.0000	0.0250	0.0000	0.0223
NBP[1]711*	0.0000	0.0117	0.0000	0.0275	0.0000	0.0244
NBP[1]736*	0.0000	0.0116	0.0000	0.0285	0.0000	0.0250
NBP[1]762*	0.0000	0.0113	0.0000	0.0291	0.0000	0.0254
NBP[1]788*	0.0000	0.0108	0.0000	0.0295	0.0000	0.0256
NBP[1]825*	0.0000	0.0181	0.0000	0.0531	0.0000	0.0456
NBP[1]873*	0.0000	0.0125	0.0000	0.0397	0.0000	0.0337
NBP[1]926*	0.0000	0.0098	0.0000	0.0337	0.0000	0.0283
NBP[1]978*	0.0000	0.0100	0.0000	0.0379	0.0000	0.0313
NBP[1]1021*	0.0000	0.0050	0.0000	0.0198	0.0000	0.0162
NBP[1]1075*	0.0000	0.0031	0.0000	0.0129	0.0000	0.0105
NBP[1]1123*	0.0000	0.0028	0.0000	0.0128	0.0000	0.0103

* Specified by user.

Material Stream: Pandhi-Water (continued)

Fluid Package: Basis-1
Property Package: Peng-Robinson

COMPOSITION

Liquid Phase (continued)

Phase Fraction 0.0000

COMPONENTS	MOLAR FLOW (kgmole/h)	MOLE FRACTION	MASS FLOW (tonne/d)	MASS FRACTION	LIQUID VOLUME FLOW (m3/h)	LIQUID VOLUME FRACTION
NBP[1]1173*	0.0000	0.0020	0.0000	0.0098	0.0000	0.0078
NBP[1]1250*	0.0000	0.0027	0.0000	0.0138	0.0000	0.0109
NBP[1]1339*	0.0000	0.0025	0.0000	0.0143	0.0000	0.0111
NBP[1]1432*	0.0000	0.0017	0.0000	0.0110	0.0000	0.0084
NBP[1]1528*	0.0000	0.0012	0.0000	0.0084	0.0000	0.0063
NBP[1]1637*	0.0000	0.0009	0.0000	0.0062	0.0000	0.0046
NBP[1]1732*	0.0000	0.0007	0.0000	0.0052	0.0000	0.0039
NBP[1]1819*	0.0000	0.0007	0.0000	0.0052	0.0000	0.0038
NBP[1]1913*	0.0000	0.0000	0.0000	0.0000	0.0000	0.0000
Total	0.0000	1.0000	0.0000	1.0000	0.0000	1.0000

Aqueous Phase

Phase Fraction 1.000

COMPONENTS	MOLAR FLOW (kgmole/h)	MOLE FRACTION	MASS FLOW (tonne/d)	MASS FRACTION	LIQUID VOLUME FLOW (m3/h)	LIQUID VOLUME FRACTION
Methane	0.0001	0.0000	0.0000	0.0000	0.0000	0.0000
Ethane	0.0000	0.0000	0.0000	0.0000	0.0000	0.0000
Propane	0.0000	0.0000	0.0000	0.0000	0.0000	0.0000
i-Butane	0.0000	0.0000	0.0000	0.0000	0.0000	0.0000
n-Butane	0.0000	0.0000	0.0000	0.0000	0.0000	0.0000
i-Pentane	0.0000	0.0000	0.0000	0.0000	0.0000	0.0000
n-Pentane	0.0000	0.0000	0.0000	0.0000	0.0000	0.0000
n-Hexane	0.0000	0.0000	0.0000	0.0000	0.0000	0.0000
Nitrogen	0.0009	0.0000	0.0006	0.0000	0.0000	0.0000
CO2	0.0352	0.0003	0.0372	0.0008	0.0019	0.0010
H2S	0.0000	0.0000	0.0000	0.0000	0.0000	0.0000
H2O	105.4393	0.9997	45.5880	0.9992	1.9033	0.9990
NBP[1]95*	0.0000	0.0000	0.0000	0.0000	0.0000	0.0000
NBP[1]121*	0.0000	0.0000	0.0000	0.0000	0.0000	0.0000
NBP[1]147*	0.0000	0.0000	0.0000	0.0000	0.0000	0.0000
NBP[1]171*	0.0000	0.0000	0.0000	0.0000	0.0000	0.0000
NBP[1]195*	0.0000	0.0000	0.0000	0.0000	0.0000	0.0000
NBP[1]222*	0.0000	0.0000	0.0000	0.0000	0.0000	0.0000
NBP[1]248*	0.0000	0.0000	0.0000	0.0000	0.0000	0.0000
NBP[1]273*	0.0000	0.0000	0.0000	0.0000	0.0000	0.0000
NBP[1]299*	0.0000	0.0000	0.0000	0.0000	0.0000	0.0000
NBP[1]325*	0.0000	0.0000	0.0000	0.0000	0.0000	0.0000
NBP[1]351*	0.0000	0.0000	0.0000	0.0000	0.0000	0.0000
NBP[1]377*	0.0000	0.0000	0.0000	0.0000	0.0000	0.0000
NBP[1]402*	0.0000	0.0000	0.0000	0.0000	0.0000	0.0000
NBP[1]428*	0.0000	0.0000	0.0000	0.0000	0.0000	0.0000
NBP[1]454*	0.0000	0.0000	0.0000	0.0000	0.0000	0.0000
NBP[1]480*	0.0000	0.0000	0.0000	0.0000	0.0000	0.0000
NBP[1]505*	0.0000	0.0000	0.0000	0.0000	0.0000	0.0000
NBP[1]531*	0.0000	0.0000	0.0000	0.0000	0.0000	0.0000
NBP[1]557*	0.0000	0.0000	0.0000	0.0000	0.0000	0.0000
NBP[1]582*	0.0000	0.0000	0.0000	0.0000	0.0000	0.0000
NBP[1]608*	0.0000	0.0000	0.0000	0.0000	0.0000	0.0000
NBP[1]634*	0.0000	0.0000	0.0000	0.0000	0.0000	0.0000
NBP[1]659*	0.0000	0.0000	0.0000	0.0000	0.0000	0.0000
NBP[1]685*	0.0000	0.0000	0.0000	0.0000	0.0000	0.0000
NBP[1]711*	0.0000	0.0000	0.0000	0.0000	0.0000	0.0000
NBP[1]736*	0.0000	0.0000	0.0000	0.0000	0.0000	0.0000
NBP[1]762*	0.0000	0.0000	0.0000	0.0000	0.0000	0.0000
NBP[1]788*	0.0000	0.0000	0.0000	0.0000	0.0000	0.0000

* Specified by user.

Material Stream: Pandhi-Water (continued)

Fluid Package: Basis-1
Property Package: Peng-Robinson

COMPOSITION

Aqueous Phase (continued)

Phase Fraction 1.000

COMPONENTS	MOLAR FLOW (kgmole/h)	MOLE FRACTION	MASS FLOW (tonne/d)	MASS FRACTION	LIQUID VOLUME FLOW (m3/h)	LIQUID VOLUME FRACTION
NBP[1]825*	0.0000	0.0000	0.0000	0.0000	0.0000	0.0000
NBP[1]873*	0.0000	0.0000	0.0000	0.0000	0.0000	0.0000
NBP[1]926*	0.0000	0.0000	0.0000	0.0000	0.0000	0.0000
NBP[1]978*	0.0000	0.0000	0.0000	0.0000	0.0000	0.0000
NBP[1]1021*	0.0000	0.0000	0.0000	0.0000	0.0000	0.0000
NBP[1]1075*	0.0000	0.0000	0.0000	0.0000	0.0000	0.0000
NBP[1]1123*	0.0000	0.0000	0.0000	0.0000	0.0000	0.0000
NBP[1]1173*	0.0000	0.0000	0.0000	0.0000	0.0000	0.0000
NBP[1]1250*	0.0000	0.0000	0.0000	0.0000	0.0000	0.0000
NBP[1]1339*	0.0000	0.0000	0.0000	0.0000	0.0000	0.0000
NBP[1]1432*	0.0000	0.0000	0.0000	0.0000	0.0000	0.0000
NBP[1]1528*	0.0000	0.0000	0.0000	0.0000	0.0000	0.0000
NBP[1]1637*	0.0000	0.0000	0.0000	0.0000	0.0000	0.0000
NBP[1]1732*	0.0000	0.0000	0.0000	0.0000	0.0000	0.0000
NBP[1]1819*	0.0000	0.0000	0.0000	0.0000	0.0000	0.0000
NBP[1]1913*	0.0000	0.0000	0.0000	0.0000	0.0000	0.0000
Total	105.4755	1.0000	45.6258	1.0000	1.9052	1.0000

Material Stream: permeate

Fluid Package: Basis-1
Property Package: Peng-Robinson

CONDITIONS

		Overall	Vapour Phase
Vapour / Phase Fraction		1.0000	1.0000
Temperature:	(F)	100.0 *	100.0
Pressure:	(psig)	20.00 *	20.00
Molar Flow	(MMSCFD)	2.810 *	2.810
Mass Flow	(tonne/d)	76.19	76.19
Std Ideal Liq Vol Flow	(barrel/day)	1140	1140
Molar Enthalpy	(kJ/kgmole)	-1.319e+005	-1.319e+005
Molar Entropy	(kJ/kgmole-C)	181.4	181.4
Heat Flow	(MMBtu/hr)	-17.50	-17.50
Liq Vol Flow @Std Cond	(barrel/day)	4.980e+005 *	4.980e+005

PROPERTIES

		Overall	Vapour Phase
Molecular Weight		22.68	22.68
Molar Density	(kgmole/m3)	9.306e-002	9.306e-002
Mass Density	(kg/m3)	2.111	2.111
Act. Volume Flow	(barrel/day)	2.270e+005	2.270e+005
Mass Enthalpy	(kJ/kg)	-5817	-5817
Mass Entropy	(kJ/kg-C)	7.998	7.998
Heat Capacity	(kJ/kgmole-C)	37.74	37.74
Mass Heat Capacity	(kJ/kg-C)	1.664	1.664
LHV Molar Basis (Std)	(Btu/SCF)	727.1	727.1
LHV Mass Basis (Std)	(kJ/kg)	2.829e+004	2.829e+004
Phase Fraction [Vol. Basis]		1.000	1.000
Phase Fraction [Mass Basis]		1.000	1.000
Partial Pressure of CO2	(psig)	-8.100	---
Cost Based on Flow	(Cost/s)	0.0000	0.0000
Act. Gas Flow	(ACT_m3/h)	1504	1504
Avg. Liq. Density	(kgmole/m3)	18.53	18.53
Specific Heat	(kJ/kgmole-C)	37.74	37.74
Std. Gas Flow	(STD_m3/h)	3309	3309

* Specified by user.

Material Stream: permeate (continued)

Fluid Package: Basis-1
Property Package: Peng-Robinson

PROPERTIES

	Overall	Vapour Phase			
Std. Ideal Liq. Mass Density (kg/m3)	420.3	420.3			
Act. Liq. Flow (barrel/day)	---	---			
Z Factor	0.9944	0.9944			
Watson K	14.59	14.59			
User Property	---	---			
Partial Pressure of H2S (psig)	-14.70	---			
Cp/(Cp - R)	1.283	1.283			
Cp/Cv	1.292	1.292			
Heat of Vap. (kJ/kgmole)	1.372e+004	---			
Kinematic Viscosity (cSt)	5.993	5.993			
Liq. Mass Density (Std. Cond) (kg/m3)	0.9622	0.9622			
Liq. Vol. Flow (Std. Cond) (barrel/day)	4.980e+005	4.980e+005			
Liquid Fraction	0.0000	0.0000			
Molar Volume (m3/kgmole)	10.75	10.75			
Mass Heat of Vap. (kJ/kg)	604.9	---			
Phase Fraction [Molar Basis]	1.0000	1.0000			
Surface Tension (dyne/cm)	---	---			
Thermal Conductivity (W/m-K)	3.032e-002	3.032e-002			
Viscosity (cP)	1.265e-002	1.265e-002			
Cv (Semi-Ideal) (kJ/kgmole-C)	29.43	29.43			
Mass Cv (Semi-Ideal) (kJ/kg-C)	1.297	1.297			
Cv (kJ/kgmole-C)	29.20	29.20			
Mass Cv (kJ/kg-C)	1.288	1.288			
Cv (Ent. Method) (kJ/kgmole-C)	---	---			
Mass Cv (Ent. Method) (kJ/kg-C)	---	---			
Cp/Cv (Ent. Method)	---	---			
Reid VP at 37.8 C (psig)	---	---			
True VP at 37.8 C (psig)	---	---			
Liq. Vol. Flow - Sum(Std. Cond) (barrel/day)	4.980e+005	4.980e+005			
HHV Molar Basis (Std) (Btu/SCF)	800.0	800.0			
HHV Mass Basis (Std) (kJ/kg)	3.113e+004	3.113e+004			
CO2 Loading	---	---			
CO2 App ML Con (kgmole/m3)	---	---			
CO2 App WT Con (kgmol/kg)	---	---			
Phase Fraction [Act. Vol. Basis]	1.000	1.000			
Mass Exergy (kJ/kg)	93.92	---			
Viscosity Index	-9.135	---			
Ideal Gas Cp/Cv	1.285	1.285			
Ideal Gas Cp (kJ/kgmole-C)	37.49	37.49			
Mass Ideal Gas Cp (kJ/kg-C)	1.653	1.653			
Bubble Point Pressure (psig)	---	---			

COMPOSITION

Overall Phase

Vapour Fraction 1.0000

COMPONENTS	MOLAR FLOW (kgmole/h)	MOLE FRACTION	MASS FLOW (tonne/d)	MASS FRACTION	LIQUID VOLUME FLOW (m3/h)	LIQUID VOLUME FRACTION
Methane	100.4480 *	0.7177 *	38.6754 *	0.5076 *	5.3825 *	0.7126 *
Ethane	5.2335 *	0.0374 *	3.7769 *	0.0496 *	0.4424 *	0.0586 *
Propane	0.3663 *	0.0026 *	0.3877 *	0.0051 *	0.0319 *	0.0042 *
i-Butane	0.0209 *	0.0001 *	0.0292 *	0.0004 *	0.0022 *	0.0003 *
n-Butane	0.0209 *	0.0001 *	0.0292 *	0.0004 *	0.0021 *	0.0003 *
i-Pentane	0.0105 *	0.0001 *	0.0181 *	0.0002 *	0.0012 *	0.0002 *
n-Pentane	0.0000 *	0.0000 *	0.0000 *	0.0000 *	0.0000 *	0.0000 *
n-Hexane	0.2093 *	0.0015 *	0.4330 *	0.0057 *	0.0272 *	0.0036 *
Nitrogen	7.0412 *	0.0503 *	4.7339 *	0.0621 *	0.2446 *	0.0324 *
CO2	26.6072 *	0.1901 *	28.1034 *	0.3689 *	1.4188 *	0.1878 *

Licensed to: PETROCHEMICAL ENGINEERIN
* Specified by user.

Material Stream: permeate (continued)

Fluid Package: Basis-1
Property Package: Peng-Robinson

COMPOSITION

Overall Phase (continued)

Vapour Fraction 1.0000

COMPONENTS	MOLAR FLOW (kgmole/h)	MOLE FRACTION	MASS FLOW (tonne/d)	MASS FRACTION	LIQUID VOLUME FLOW (m3/h)	LIQUID VOLUME FRACTION
H2S	0.0000 *	0.0000 *	0.0000 *	0.0000 *	0.0000 *	0.0000 *
H2O	0.0000 *	0.0000 *	0.0000 *	0.0000 *	0.0000 *	0.0000 *
NBP[1]95*	0.0000 *	0.0000 *	0.0000 *	0.0000 *	0.0000 *	0.0000 *
NBP[1]121*	0.0000 *	0.0000 *	0.0000 *	0.0000 *	0.0000 *	0.0000 *
NBP[1]147*	0.0000 *	0.0000 *	0.0000 *	0.0000 *	0.0000 *	0.0000 *
NBP[1]171*	0.0000 *	0.0000 *	0.0000 *	0.0000 *	0.0000 *	0.0000 *
NBP[1]195*	0.0000 *	0.0000 *	0.0000 *	0.0000 *	0.0000 *	0.0000 *
NBP[1]222*	0.0000 *	0.0000 *	0.0000 *	0.0000 *	0.0000 *	0.0000 *
NBP[1]248*	0.0000 *	0.0000 *	0.0000 *	0.0000 *	0.0000 *	0.0000 *
NBP[1]273*	0.0000 *	0.0000 *	0.0000 *	0.0000 *	0.0000 *	0.0000 *
NBP[1]299*	0.0000 *	0.0000 *	0.0000 *	0.0000 *	0.0000 *	0.0000 *
NBP[1]325*	0.0000 *	0.0000 *	0.0000 *	0.0000 *	0.0000 *	0.0000 *
NBP[1]351*	0.0000 *	0.0000 *	0.0000 *	0.0000 *	0.0000 *	0.0000 *
NBP[1]377*	0.0000 *	0.0000 *	0.0000 *	0.0000 *	0.0000 *	0.0000 *
NBP[1]402*	0.0000 *	0.0000 *	0.0000 *	0.0000 *	0.0000 *	0.0000 *
NBP[1]428*	0.0000 *	0.0000 *	0.0000 *	0.0000 *	0.0000 *	0.0000 *
NBP[1]454*	0.0000 *	0.0000 *	0.0000 *	0.0000 *	0.0000 *	0.0000 *
NBP[1]480*	0.0000 *	0.0000 *	0.0000 *	0.0000 *	0.0000 *	0.0000 *
NBP[1]505*	0.0000 *	0.0000 *	0.0000 *	0.0000 *	0.0000 *	0.0000 *
NBP[1]531*	0.0000 *	0.0000 *	0.0000 *	0.0000 *	0.0000 *	0.0000 *
NBP[1]557*	0.0000 *	0.0000 *	0.0000 *	0.0000 *	0.0000 *	0.0000 *
NBP[1]582*	0.0000 *	0.0000 *	0.0000 *	0.0000 *	0.0000 *	0.0000 *
NBP[1]608*	0.0000 *	0.0000 *	0.0000 *	0.0000 *	0.0000 *	0.0000 *
NBP[1]634*	0.0000 *	0.0000 *	0.0000 *	0.0000 *	0.0000 *	0.0000 *
NBP[1]659*	0.0000 *	0.0000 *	0.0000 *	0.0000 *	0.0000 *	0.0000 *
NBP[1]685*	0.0000 *	0.0000 *	0.0000 *	0.0000 *	0.0000 *	0.0000 *
NBP[1]711*	0.0000 *	0.0000 *	0.0000 *	0.0000 *	0.0000 *	0.0000 *
NBP[1]736*	0.0000 *	0.0000 *	0.0000 *	0.0000 *	0.0000 *	0.0000 *
NBP[1]762*	0.0000 *	0.0000 *	0.0000 *	0.0000 *	0.0000 *	0.0000 *
NBP[1]788*	0.0000 *	0.0000 *	0.0000 *	0.0000 *	0.0000 *	0.0000 *
NBP[1]825*	0.0000 *	0.0000 *	0.0000 *	0.0000 *	0.0000 *	0.0000 *
NBP[1]873*	0.0000 *	0.0000 *	0.0000 *	0.0000 *	0.0000 *	0.0000 *
NBP[1]926*	0.0000 *	0.0000 *	0.0000 *	0.0000 *	0.0000 *	0.0000 *
NBP[1]978*	0.0000 *	0.0000 *	0.0000 *	0.0000 *	0.0000 *	0.0000 *
NBP[1]1021*	0.0000 *	0.0000 *	0.0000 *	0.0000 *	0.0000 *	0.0000 *
NBP[1]1075*	0.0000 *	0.0000 *	0.0000 *	0.0000 *	0.0000 *	0.0000 *
NBP[1]1123*	0.0000 *	0.0000 *	0.0000 *	0.0000 *	0.0000 *	0.0000 *
NBP[1]1173*	0.0000 *	0.0000 *	0.0000 *	0.0000 *	0.0000 *	0.0000 *
NBP[1]1250*	0.0000 *	0.0000 *	0.0000 *	0.0000 *	0.0000 *	0.0000 *
NBP[1]1339*	0.0000 *	0.0000 *	0.0000 *	0.0000 *	0.0000 *	0.0000 *
NBP[1]1432*	0.0000 *	0.0000 *	0.0000 *	0.0000 *	0.0000 *	0.0000 *
NBP[1]1528*	0.0000 *	0.0000 *	0.0000 *	0.0000 *	0.0000 *	0.0000 *
NBP[1]1637*	0.0000 *	0.0000 *	0.0000 *	0.0000 *	0.0000 *	0.0000 *
NBP[1]1732*	0.0000 *	0.0000 *	0.0000 *	0.0000 *	0.0000 *	0.0000 *
NBP[1]1819*	0.0000 *	0.0000 *	0.0000 *	0.0000 *	0.0000 *	0.0000 *
NBP[1]1913*	0.0000 *	0.0000 *	0.0000 *	0.0000 *	0.0000 *	0.0000 *
Total	139.9579	1.0000	76.1868	1.0000	7.5529	1.0000

Vapour Phase

Phase Fraction 1.000

COMPONENTS	MOLAR FLOW (kgmole/h)	MOLE FRACTION	MASS FLOW (tonne/d)	MASS FRACTION	LIQUID VOLUME FLOW (m3/h)	LIQUID VOLUME FRACTION
Methane	100.4480	0.7177	38.6754	0.5076	5.3825	0.7126
Ethane	5.2335	0.0374	3.7769	0.0496	0.4424	0.0586
Propane	0.3663	0.0026	0.3877	0.0051	0.0319	0.0042

* Specified by user.

Material Stream: permeate (continued)

Fluid Package: Basis-1
Property Package: Peng-Robinson

COMPOSITION

Vapour Phase (continued)

Phase Fraction 1.000

COMPONENTS	MOLAR FLOW (kgmole/h)	MOLE FRACTION	MASS FLOW (tonne/d)	MASS FRACTION	LIQUID VOLUME FLOW (m3/h)	LIQUID VOLUME FRACTION
i-Butane	0.0209	0.0001	0.0292	0.0004	0.0022	0.0003
n-Butane	0.0209	0.0001	0.0292	0.0004	0.0021	0.0003
i-Pentane	0.0105	0.0001	0.0181	0.0002	0.0012	0.0002
n-Pentane	0.0000	0.0000	0.0000	0.0000	0.0000	0.0000
n-Hexane	0.2093	0.0015	0.4330	0.0057	0.0272	0.0036
Nitrogen	7.0412	0.0503	4.7339	0.0621	0.2446	0.0324
CO2	26.6072	0.1901	28.1034	0.3689	1.4188	0.1878
H2S	0.0000	0.0000	0.0000	0.0000	0.0000	0.0000
H2O	0.0000	0.0000	0.0000	0.0000	0.0000	0.0000
NBP[1]95*	0.0000	0.0000	0.0000	0.0000	0.0000	0.0000
NBP[1]121*	0.0000	0.0000	0.0000	0.0000	0.0000	0.0000
NBP[1]147*	0.0000	0.0000	0.0000	0.0000	0.0000	0.0000
NBP[1]171*	0.0000	0.0000	0.0000	0.0000	0.0000	0.0000
NBP[1]195*	0.0000	0.0000	0.0000	0.0000	0.0000	0.0000
NBP[1]222*	0.0000	0.0000	0.0000	0.0000	0.0000	0.0000
NBP[1]248*	0.0000	0.0000	0.0000	0.0000	0.0000	0.0000
NBP[1]273*	0.0000	0.0000	0.0000	0.0000	0.0000	0.0000
NBP[1]299*	0.0000	0.0000	0.0000	0.0000	0.0000	0.0000
NBP[1]325*	0.0000	0.0000	0.0000	0.0000	0.0000	0.0000
NBP[1]351*	0.0000	0.0000	0.0000	0.0000	0.0000	0.0000
NBP[1]377*	0.0000	0.0000	0.0000	0.0000	0.0000	0.0000
NBP[1]402*	0.0000	0.0000	0.0000	0.0000	0.0000	0.0000
NBP[1]428*	0.0000	0.0000	0.0000	0.0000	0.0000	0.0000
NBP[1]454*	0.0000	0.0000	0.0000	0.0000	0.0000	0.0000
NBP[1]480*	0.0000	0.0000	0.0000	0.0000	0.0000	0.0000
NBP[1]505*	0.0000	0.0000	0.0000	0.0000	0.0000	0.0000
NBP[1]531*	0.0000	0.0000	0.0000	0.0000	0.0000	0.0000
NBP[1]557*	0.0000	0.0000	0.0000	0.0000	0.0000	0.0000
NBP[1]582*	0.0000	0.0000	0.0000	0.0000	0.0000	0.0000
NBP[1]608*	0.0000	0.0000	0.0000	0.0000	0.0000	0.0000
NBP[1]634*	0.0000	0.0000	0.0000	0.0000	0.0000	0.0000
NBP[1]659*	0.0000	0.0000	0.0000	0.0000	0.0000	0.0000
NBP[1]685*	0.0000	0.0000	0.0000	0.0000	0.0000	0.0000
NBP[1]711*	0.0000	0.0000	0.0000	0.0000	0.0000	0.0000
NBP[1]736*	0.0000	0.0000	0.0000	0.0000	0.0000	0.0000
NBP[1]762*	0.0000	0.0000	0.0000	0.0000	0.0000	0.0000
NBP[1]788*	0.0000	0.0000	0.0000	0.0000	0.0000	0.0000
NBP[1]825*	0.0000	0.0000	0.0000	0.0000	0.0000	0.0000
NBP[1]873*	0.0000	0.0000	0.0000	0.0000	0.0000	0.0000
NBP[1]926*	0.0000	0.0000	0.0000	0.0000	0.0000	0.0000
NBP[1]978*	0.0000	0.0000	0.0000	0.0000	0.0000	0.0000
NBP[1]1021*	0.0000	0.0000	0.0000	0.0000	0.0000	0.0000
NBP[1]1075*	0.0000	0.0000	0.0000	0.0000	0.0000	0.0000
NBP[1]1123*	0.0000	0.0000	0.0000	0.0000	0.0000	0.0000
NBP[1]1173*	0.0000	0.0000	0.0000	0.0000	0.0000	0.0000
NBP[1]1250*	0.0000	0.0000	0.0000	0.0000	0.0000	0.0000
NBP[1]1339*	0.0000	0.0000	0.0000	0.0000	0.0000	0.0000
NBP[1]1432*	0.0000	0.0000	0.0000	0.0000	0.0000	0.0000
NBP[1]1528*	0.0000	0.0000	0.0000	0.0000	0.0000	0.0000
NBP[1]1637*	0.0000	0.0000	0.0000	0.0000	0.0000	0.0000
NBP[1]1732*	0.0000	0.0000	0.0000	0.0000	0.0000	0.0000
NBP[1]1819*	0.0000	0.0000	0.0000	0.0000	0.0000	0.0000
NBP[1]1913*	0.0000	0.0000	0.0000	0.0000	0.0000	0.0000
Total	139.9579	1.0000	76.1868	1.0000	7.5529	1.0000

Licensed to: PETROCHEMICAL ENGINEERIN
* Specified by user.

Petrochemical Engineering Consultants Karachi, Pakistan	Case Name:	CASE-2B.hsc	
	Unit Set:	NewUser5e	
	Date/Time:	Fri Mar 20 18:22:45 2020	

Material Stream: SEP GAS

Fluid Package: Basis-1

Property Package: Peng-Robinson

CONDITIONS

	Overall	Vapour Phase	Liquid Phase	Aqueous Phase
Vapour / Phase Fraction	0.9999	0.9999	0.0001	0.0000
Temperature: (F)	134.9	134.9	134.9	134.9
Pressure: (psig)	640.0	640.0	640.0	640.0
Molar Flow (MMSCFD)	5.461	5.461	3.569e-004	0.0000
Mass Flow (tonne/d)	143.1	142.7	0.3241	0.0000
Std Ideal Liq Vol Flow (barrel/day)	2457	2455	1.922	0.0000
Molar Enthalpy (kJ/kgmole)	-8.943e+004	-8.933e+004	-1.607e+006	-2.837e+005
Molar Entropy (kJ/kgmole-C)	160.0	159.8	1887	61.64
Heat Flow (MMBtu/hr)	-23.06	-23.03	-2.708e-002	0.0000
Liq Vol Flow @Std Cond (barrel/day)	9.668e+005 *	9.668e+005	2.023	0.0000

PROPERTIES

	Overall	Vapour Phase	Liquid Phase	Aqueous Phase
Molecular Weight	21.91	21.87	759.7	18.02
Molar Density (kgmole/m3)	1.852	1.852	1.293	46.11
Mass Density (kg/m3)	40.59	40.50	982.4	831.1
Act. Volume Flow (barrel/day)	2.217e+004	2.217e+004	2.075	0.0000
Mass Enthalpy (kJ/kg)	-4081	-4085	-2116	-1.574e+004
Mass Entropy (kJ/kg-C)	7.299	7.310	2.483	3.420
Heat Capacity (kJ/kgmole-C)	50.88	50.78	1545	77.83
Mass Heat Capacity (kJ/kg-C)	2.322	2.322	2.034	4.318
LHV Molar Basis (Std) (Btu/SCF)	---	---	---	9.274e-004
LHV Mass Basis (Std) (kJ/kg)	---	---	---	4.542e-002
Phase Fraction [Vol. Basis]	0.9992	0.9992	7.822e-004	---
Phase Fraction [Mass Basis]	0.9977	0.9977	2.265e-003	0.0000
Partial Pressure of CO2 (psig)	7.400	---	---	---
Cost Based on Flow (Cost/s)	0.0000	0.0000	0.0000	0.0000
Act. Gas Flow (ACT_m3/h)	146.8	146.8	---	---
Avg. Liq. Density (kgmole/m3)	16.71	16.72	1.396	55.36
Specific Heat (kJ/kgmole-C)	50.88	50.78	1545	77.83
Std. Gas Flow (STD_m3/h)	6432	6431	0.4202	0.0000
Std. Ideal Liq. Mass Density (kg/m3)	366.2	365.7	1060	997.8
Act. Liq. Flow (barrel/day)	2.075	---	2.075	0.0000
Z Factor	---	0.8873	1.271	3.565e-002
Watson K	17.11	17.13	11.74	8.500
User Property	---	---	---	---
Partial Pressure of H2S (psig)	-14.69	---	---	---
Cp/(Cp - R)	1.195	1.196	1.005	1.120
Cp/Cv	1.386	1.387	1.005	1.162
Heat of Vap. (kJ/kgmole)	2.209e+004	---	---	---
Kinematic Viscosity (cSt)	---	0.3348	2138	0.5824
Liq. Mass Density (Std. Cond) (kg/m3)	0.9307	0.9287	1007	1015
Liq. Vol. Flow (Std. Cond) (barrel/day)	9.668e+005	9.668e+005	2.023	0.0000
Liquid Fraction	6.534e-005	0.0000	1.000	1.000
Molar Volume (m3/kgmole)	0.5399	0.5399	0.7733	2.169e-002
Mass Heat of Vap. (kJ/kg)	1008	---	---	---
Phase Fraction [Molar Basis]	0.9999	0.9999	0.0001	0.0000
Surface Tension (dyne/cm)	15.53	---	15.53	66.44
Thermal Conductivity (W/m-K)	---	3.751e-002	0.1196	0.6507
Viscosity (cP)	---	1.356e-002	2100	0.4840
Cv (Semi-Ideal) (kJ/kgmole-C)	42.56	42.47	1537	69.52
Mass Cv (Semi-Ideal) (kJ/kg-C)	1.942	1.942	2.023	3.857
Cv (kJ/kgmole-C)	36.71	36.62	1537	67.01
Mass Cv (kJ/kg-C)	1.675	1.675	2.023	3.718
Cv (Ent. Method) (kJ/kgmole-C)	---	---	---	---
Mass Cv (Ent. Method) (kJ/kg-C)	---	---	---	---
Cp/Cv (Ent. Method)	---	---	---	---

Licensed to: PETROCHEMICAL ENGINEERIN
* Specified by user.

Material Stream: SEP GAS (continued)

Fluid Package: Basis-1
Property Package: Peng-Robinson

PROPERTIES

	Overall	Vapour Phase	Liquid Phase	Aqueous Phase
Reid VP at 37.8 C (psig)	---	---	24.83	---
True VP at 37.8 C (psig)	5197	56.09	601.5	170.4
Liq. Vol. Flow - Sum(Std. Cond) (barrel/day)	9.668e+005	9.668e+005	2.023	0.0000
HHV Molar Basis (Std) (Btu/SCF)	---	---	---	46.45
HHV Mass Basis (Std) (kJ/kg)	---	---	---	2275
CO2 Loading	---	---	---	---
CO2 App ML Con (kgmole/m3)	---	---	2.282e-002	---
CO2 App WT Con (kgmol/kg)	---	---	2.323e-005	---
Phase Fraction [Act. Vol. Basis]	0.9999	0.9999	9.360e-005	0.0000
Mass Exergy (kJ/kg)	415.0	---	---	---
Viscosity Index	---	---	---	---
Ideal Gas Cp/Cv	1.231	1.232	1.006	1.327
Ideal Gas Cp (kJ/kgmole-C)	44.30	44.22	1300	33.77
Mass Ideal Gas Cp (kJ/kg-C)	2.022	2.022	1.711	1.874
Bubble Point Pressure (psig)	4972	---	---	---

COMPOSITION

Overall Phase

Vapour Fraction 0.9999

COMPONENTS	MOLAR FLOW (kgmole/h)	MOLE FRACTION	MASS FLOW (tonne/d)	MASS FRACTION	LIQUID VOLUME FLOW (m3/h)	LIQUID VOLUME FRACTION
Methane	205.0498	0.7538	78.9502	0.5519	10.9875	0.6750
Ethane	27.9164	0.1026	20.1467	0.1408	2.3601	0.1450
Propane	14.1663	0.0521	14.9926	0.1048	1.2329	0.0757
i-Butane	1.7604	0.0065	2.4557	0.0172	0.1821	0.0112
n-Butane	3.3139	0.0122	4.6229	0.0323	0.3303	0.0203
i-Pentane	0.6167	0.0023	1.0679	0.0075	0.0714	0.0044
n-Pentane	0.6584	0.0024	1.1402	0.0080	0.0754	0.0046
n-Hexane	0.7099	0.0026	1.4683	0.0103	0.0923	0.0057
Nitrogen	5.5719	0.0205	3.7461	0.0262	0.1936	0.0119
CO2	9.1802	0.0337	9.6965	0.0678	0.4895	0.0301
H2S	0.0005	0.0000	0.0004	0.0000	0.0000	0.0000
H2O	1.2313	0.0045	0.5323	0.0037	0.0222	0.0014
NBP[1]95*	0.1983	0.0007	0.3233	0.0023	0.0198	0.0012
NBP[1]121*	0.2062	0.0008	0.3606	0.0025	0.0218	0.0013
NBP[1]147*	0.2249	0.0008	0.4328	0.0030	0.0257	0.0016
NBP[1]171*	0.3566	0.0013	0.7504	0.0052	0.0439	0.0027
NBP[1]195*	0.3743	0.0014	0.8405	0.0059	0.0486	0.0030
NBP[1]222*	0.2047	0.0008	0.4943	0.0035	0.0283	0.0017
NBP[1]248*	0.1217	0.0004	0.3159	0.0022	0.0178	0.0011
NBP[1]273*	0.0675	0.0002	0.1874	0.0013	0.0105	0.0006
NBP[1]299*	0.0351	0.0001	0.1040	0.0007	0.0057	0.0004
NBP[1]325*	0.0162	0.0001	0.0509	0.0004	0.0028	0.0002
NBP[1]351*	0.0081	0.0000	0.0272	0.0002	0.0015	0.0001
NBP[1]377*	0.0044	0.0000	0.0158	0.0001	0.0008	0.0001
NBP[1]402*	0.0024	0.0000	0.0091	0.0001	0.0005	0.0000
NBP[1]428*	0.0013	0.0000	0.0053	0.0000	0.0003	0.0000
NBP[1]454*	0.0007	0.0000	0.0031	0.0000	0.0002	0.0000
NBP[1]480*	0.0004	0.0000	0.0019	0.0000	0.0001	0.0000
NBP[1]505*	0.0002	0.0000	0.0010	0.0000	0.0001	0.0000
NBP[1]531*	0.0001	0.0000	0.0006	0.0000	0.0000	0.0000
NBP[1]557*	0.0001	0.0000	0.0003	0.0000	0.0000	0.0000
NBP[1]582*	0.0000	0.0000	0.0001	0.0000	0.0000	0.0000
NBP[1]608*	0.0000	0.0000	0.0001	0.0000	0.0000	0.0000
NBP[1]634*	0.0000	0.0000	0.0000	0.0000	0.0000	0.0000
NBP[1]659*	0.0000	0.0000	0.0000	0.0000	0.0000	0.0000
NBP[1]685*	0.0000	0.0000	0.0000	0.0000	0.0000	0.0000

* Specified by user.

Material Stream: SEP GAS (continued)

Fluid Package: Basis-1
Property Package: Peng-Robinson

COMPOSITION

Overall Phase (continued)

Vapour Fraction 0.9999

COMPONENTS	MOLAR FLOW (kgmole/h)	MOLE FRACTION	MASS FLOW (tonne/d)	MASS FRACTION	LIQUID VOLUME FLOW (m3/h)	LIQUID VOLUME FRACTION
NBP[1]711*	0.0000	0.0000	0.0000	0.0000	0.0000	0.0000
NBP[1]736*	0.0000	0.0000	0.0000	0.0000	0.0000	0.0000
NBP[1]762*	0.0000	0.0000	0.0000	0.0000	0.0000	0.0000
NBP[1]788*	0.0000	0.0000	0.0000	0.0000	0.0000	0.0000
NBP[1]825*	0.0000	0.0000	0.0000	0.0000	0.0000	0.0000
NBP[1]873*	0.0000	0.0000	0.0000	0.0000	0.0000	0.0000
NBP[1]926*	0.0000	0.0000	0.0000	0.0000	0.0000	0.0000
NBP[1]978*	0.0000	0.0000	0.0000	0.0000	0.0000	0.0000
NBP[1]1021*	0.0000	0.0000	0.0000	0.0000	0.0000	0.0000
NBP[1]1075*	0.0000	0.0000	0.0000	0.0000	0.0000	0.0000
NBP[1]1123*	0.0000	0.0000	0.0000	0.0000	0.0000	0.0000
NBP[1]1173*	0.0000	0.0000	0.0000	0.0000	0.0000	0.0000
NBP[1]1250*	0.0000	0.0000	0.0000	0.0000	0.0000	0.0000
NBP[1]1339*	0.0000	0.0000	0.0000	0.0000	0.0000	0.0000
NBP[1]1432*	0.0000	0.0000	0.0000	0.0000	0.0000	0.0000
NBP[1]1528*	0.0000	0.0000	0.0000	0.0000	0.0000	0.0000
NBP[1]1637*	0.0000	0.0000	0.0000	0.0000	0.0000	0.0000
NBP[1]1732*	0.0000	0.0000	0.0000	0.0000	0.0000	0.0000
NBP[1]1819*	0.0001	0.0000	0.0039	0.0000	0.0002	0.0000
NBP[1]1913*	0.0112	0.0000	0.3148	0.0022	0.0121	0.0007
Total	272.0103	1.0000	143.0630	1.0000	16.2780	1.0000

Vapour Phase

Phase Fraction 0.9999

COMPONENTS	MOLAR FLOW (kgmole/h)	MOLE FRACTION	MASS FLOW (tonne/d)	MASS FRACTION	LIQUID VOLUME FLOW (m3/h)	LIQUID VOLUME FRACTION
Methane	205.0464	0.7539	78.9489	0.5531	10.9873	0.6755
Ethane	27.9156	0.1026	20.1461	0.1411	2.3600	0.1451
Propane	14.1657	0.0521	14.9920	0.1050	1.2329	0.0758
i-Butane	1.7603	0.0065	2.4555	0.0172	0.1821	0.0112
n-Butane	3.3137	0.0122	4.6225	0.0324	0.3302	0.0203
i-Pentane	0.6166	0.0023	1.0678	0.0075	0.0714	0.0044
n-Pentane	0.6584	0.0024	1.1400	0.0080	0.0754	0.0046
n-Hexane	0.7098	0.0026	1.4680	0.0103	0.0923	0.0057
Nitrogen	5.5718	0.0205	3.7460	0.0262	0.1936	0.0119
CO2	9.1799	0.0338	9.6961	0.0679	0.4895	0.0301
H2S	0.0005	0.0000	0.0004	0.0000	0.0000	0.0000
H2O	1.2312	0.0045	0.5323	0.0037	0.0222	0.0014
NBP[1]95*	0.1983	0.0007	0.3232	0.0023	0.0198	0.0012
NBP[1]121*	0.2062	0.0008	0.3606	0.0025	0.0218	0.0013
NBP[1]147*	0.2248	0.0008	0.4327	0.0030	0.0257	0.0016
NBP[1]171*	0.3565	0.0013	0.7502	0.0053	0.0439	0.0027
NBP[1]195*	0.3742	0.0014	0.8403	0.0059	0.0486	0.0030
NBP[1]222*	0.2046	0.0008	0.4941	0.0035	0.0282	0.0017
NBP[1]248*	0.1216	0.0004	0.3158	0.0022	0.0178	0.0011
NBP[1]273*	0.0674	0.0002	0.1873	0.0013	0.0105	0.0006
NBP[1]299*	0.0351	0.0001	0.1039	0.0007	0.0057	0.0004
NBP[1]325*	0.0162	0.0001	0.0509	0.0004	0.0028	0.0002
NBP[1]351*	0.0081	0.0000	0.0271	0.0002	0.0015	0.0001
NBP[1]377*	0.0044	0.0000	0.0157	0.0001	0.0008	0.0001
NBP[1]402*	0.0024	0.0000	0.0091	0.0001	0.0005	0.0000
NBP[1]428*	0.0013	0.0000	0.0052	0.0000	0.0003	0.0000
NBP[1]454*	0.0007	0.0000	0.0031	0.0000	0.0002	0.0000
NBP[1]480*	0.0004	0.0000	0.0019	0.0000	0.0001	0.0000
NBP[1]505*	0.0002	0.0000	0.0010	0.0000	0.0001	0.0000

* Specified by user.

Material Stream: SEP GAS (continued)

Fluid Package: Basis-1
Property Package: Peng-Robinson

COMPOSITION

Vapour Phase (continued)

Phase Fraction 0.9999

COMPONENTS	MOLAR FLOW (kgmole/h)	MOLE FRACTION	MASS FLOW (tonne/d)	MASS FRACTION	LIQUID VOLUME FLOW (m3/h)	LIQUID VOLUME FRACTION
NBP[1]531*	0.0001	0.0000	0.0005	0.0000	0.0000	0.0000
NBP[1]557*	0.0001	0.0000	0.0003	0.0000	0.0000	0.0000
NBP[1]582*	0.0000	0.0000	0.0001	0.0000	0.0000	0.0000
NBP[1]608*	0.0000	0.0000	0.0001	0.0000	0.0000	0.0000
NBP[1]634*	0.0000	0.0000	0.0000	0.0000	0.0000	0.0000
NBP[1]659*	0.0000	0.0000	0.0000	0.0000	0.0000	0.0000
NBP[1]685*	0.0000	0.0000	0.0000	0.0000	0.0000	0.0000
NBP[1]711*	0.0000	0.0000	0.0000	0.0000	0.0000	0.0000
NBP[1]736*	0.0000	0.0000	0.0000	0.0000	0.0000	0.0000
NBP[1]762*	0.0000	0.0000	0.0000	0.0000	0.0000	0.0000
NBP[1]788*	0.0000	0.0000	0.0000	0.0000	0.0000	0.0000
NBP[1]825*	0.0000	0.0000	0.0000	0.0000	0.0000	0.0000
NBP[1]873*	0.0000	0.0000	0.0000	0.0000	0.0000	0.0000
NBP[1]926*	0.0000	0.0000	0.0000	0.0000	0.0000	0.0000
NBP[1]978*	0.0000	0.0000	0.0000	0.0000	0.0000	0.0000
NBP[1]1021*	0.0000	0.0000	0.0000	0.0000	0.0000	0.0000
NBP[1]1075*	0.0000	0.0000	0.0000	0.0000	0.0000	0.0000
NBP[1]1123*	0.0000	0.0000	0.0000	0.0000	0.0000	0.0000
NBP[1]1173*	0.0000	0.0000	0.0000	0.0000	0.0000	0.0000
NBP[1]1250*	0.0000	0.0000	0.0000	0.0000	0.0000	0.0000
NBP[1]1339*	0.0000	0.0000	0.0000	0.0000	0.0000	0.0000
NBP[1]1432*	0.0000	0.0000	0.0000	0.0000	0.0000	0.0000
NBP[1]1528*	0.0000	0.0000	0.0000	0.0000	0.0000	0.0000
NBP[1]1637*	0.0000	0.0000	0.0000	0.0000	0.0000	0.0000
NBP[1]1732*	0.0000	0.0000	0.0000	0.0000	0.0000	0.0000
NBP[1]1819*	0.0000	0.0000	0.0000	0.0000	0.0000	0.0000
NBP[1]1913*	0.0000	0.0000	0.0000	0.0000	0.0000	0.0000
Total	271.9925	1.0000	142.7389	1.0000	16.2653	1.0000

Liquid Phase

Phase Fraction 6.534e-005

COMPONENTS	MOLAR FLOW (kgmole/h)	MOLE FRACTION	MASS FLOW (tonne/d)	MASS FRACTION	LIQUID VOLUME FLOW (m3/h)	LIQUID VOLUME FRACTION
Methane	0.0034	0.1911	0.0013	0.0040	0.0002	0.0143
Ethane	0.0008	0.0446	0.0006	0.0018	0.0001	0.0053
Propane	0.0006	0.0360	0.0007	0.0021	0.0001	0.0044
i-Butane	0.0001	0.0067	0.0002	0.0005	0.0000	0.0010
n-Butane	0.0002	0.0137	0.0003	0.0011	0.0000	0.0019
i-Pentane	0.0001	0.0038	0.0001	0.0004	0.0000	0.0006
n-Pentane	0.0001	0.0045	0.0001	0.0004	0.0000	0.0007
n-Hexane	0.0001	0.0080	0.0003	0.0009	0.0000	0.0015
Nitrogen	0.0001	0.0047	0.0001	0.0002	0.0000	0.0002
CO2	0.0003	0.0177	0.0003	0.0010	0.0000	0.0013
H2S	0.0000	0.0000	0.0000	0.0000	0.0000	0.0000
H2O	0.0000	0.0023	0.0000	0.0001	0.0000	0.0001
NBP[1]95*	0.0000	0.0013	0.0000	0.0001	0.0000	0.0002
NBP[1]121*	0.0000	0.0016	0.0001	0.0002	0.0000	0.0002
NBP[1]147*	0.0000	0.0022	0.0001	0.0002	0.0000	0.0004
NBP[1]171*	0.0001	0.0042	0.0002	0.0005	0.0000	0.0007
NBP[1]195*	0.0001	0.0055	0.0002	0.0007	0.0000	0.0010
NBP[1]222*	0.0001	0.0040	0.0002	0.0005	0.0000	0.0008
NBP[1]248*	0.0001	0.0031	0.0001	0.0004	0.0000	0.0006
NBP[1]273*	0.0000	0.0022	0.0001	0.0003	0.0000	0.0005
NBP[1]299*	0.0000	0.0016	0.0001	0.0003	0.0000	0.0004
NBP[1]325*	0.0000	0.0010	0.0001	0.0002	0.0000	0.0002

* Specified by user.

Material Stream: SEP GAS (continued)

Fluid Package: Basis-1
Property Package: Peng-Robinson

COMPOSITION

Liquid Phase (continued)

Phase Fraction 6.534e-005

COMPONENTS	MOLAR FLOW (kgmole/h)	MOLE FRACTION	MASS FLOW (tonne/d)	MASS FRACTION	LIQUID VOLUME FLOW (m3/h)	LIQUID VOLUME FRACTION
NBP[1]351*	0.0000	0.0007	0.0000	0.0001	0.0000	0.0002
NBP[1]377*	0.0000	0.0005	0.0000	0.0001	0.0000	0.0001
NBP[1]402*	0.0000	0.0004	0.0000	0.0001	0.0000	0.0001
NBP[1]428*	0.0000	0.0003	0.0000	0.0001	0.0000	0.0001
NBP[1]454*	0.0000	0.0003	0.0000	0.0001	0.0000	0.0001
NBP[1]480*	0.0000	0.0002	0.0000	0.0001	0.0000	0.0001
NBP[1]505*	0.0000	0.0002	0.0000	0.0000	0.0000	0.0001
NBP[1]531*	0.0000	0.0001	0.0000	0.0000	0.0000	0.0001
NBP[1]557*	0.0000	0.0001	0.0000	0.0000	0.0000	0.0000
NBP[1]582*	0.0000	0.0001	0.0000	0.0000	0.0000	0.0000
NBP[1]608*	0.0000	0.0001	0.0000	0.0000	0.0000	0.0000
NBP[1]634*	0.0000	0.0000	0.0000	0.0000	0.0000	0.0000
NBP[1]659*	0.0000	0.0000	0.0000	0.0000	0.0000	0.0000
NBP[1]685*	0.0000	0.0000	0.0000	0.0000	0.0000	0.0000
NBP[1]711*	0.0000	0.0000	0.0000	0.0000	0.0000	0.0000
NBP[1]736*	0.0000	0.0000	0.0000	0.0000	0.0000	0.0000
NBP[1]762*	0.0000	0.0000	0.0000	0.0000	0.0000	0.0000
NBP[1]788*	0.0000	0.0000	0.0000	0.0000	0.0000	0.0000
NBP[1]825*	0.0000	0.0000	0.0000	0.0000	0.0000	0.0000
NBP[1]873*	0.0000	0.0000	0.0000	0.0000	0.0000	0.0000
NBP[1]926*	0.0000	0.0000	0.0000	0.0000	0.0000	0.0000
NBP[1]978*	0.0000	0.0000	0.0000	0.0000	0.0000	0.0000
NBP[1]1021*	0.0000	0.0000	0.0000	0.0000	0.0000	0.0000
NBP[1]1075*	0.0000	0.0000	0.0000	0.0000	0.0000	0.0000
NBP[1]1123*	0.0000	0.0000	0.0000	0.0000	0.0000	0.0000
NBP[1]1173*	0.0000	0.0000	0.0000	0.0000	0.0000	0.0000
NBP[1]1250*	0.0000	0.0000	0.0000	0.0000	0.0000	0.0000
NBP[1]1339*	0.0000	0.0000	0.0000	0.0000	0.0000	0.0000
NBP[1]1432*	0.0000	0.0000	0.0000	0.0000	0.0000	0.0000
NBP[1]1528*	0.0000	0.0000	0.0000	0.0000	0.0000	0.0000
NBP[1]1637*	0.0000	0.0000	0.0000	0.0000	0.0000	0.0000
NBP[1]1732*	0.0000	0.0000	0.0000	0.0000	0.0000	0.0000
NBP[1]1819*	0.0001	0.0083	0.0039	0.0121	0.0002	0.0120
NBP[1]1913*	0.0112	0.6288	0.3148	0.9713	0.0121	0.9508
Total	0.0178	1.0000	0.3241	1.0000	0.0127	1.0000

Aqueous Phase

Phase Fraction 0.0000

COMPONENTS	MOLAR FLOW (kgmole/h)	MOLE FRACTION	MASS FLOW (tonne/d)	MASS FRACTION	LIQUID VOLUME FLOW (m3/h)	LIQUID VOLUME FRACTION
Methane	0.0000	0.0000	0.0000	0.0000	0.0000	0.0000
Ethane	0.0000	0.0000	0.0000	0.0000	0.0000	0.0000
Propane	0.0000	0.0000	0.0000	0.0000	0.0000	0.0000
i-Butane	0.0000	0.0000	0.0000	0.0000	0.0000	0.0000
n-Butane	0.0000	0.0000	0.0000	0.0000	0.0000	0.0000
i-Pentane	0.0000	0.0000	0.0000	0.0000	0.0000	0.0000
n-Pentane	0.0000	0.0000	0.0000	0.0000	0.0000	0.0000
n-Hexane	0.0000	0.0000	0.0000	0.0000	0.0000	0.0000
Nitrogen	0.0000	0.0000	0.0000	0.0000	0.0000	0.0000
CO2	0.0000	0.0003	0.0000	0.0008	0.0000	0.0010
H2S	0.0000	0.0000	0.0000	0.0000	0.0000	0.0000
H2O	0.0000	0.9997	0.0000	0.9992	0.0000	0.9990
NBP[1]95*	0.0000	0.0000	0.0000	0.0000	0.0000	0.0000
NBP[1]121*	0.0000	0.0000	0.0000	0.0000	0.0000	0.0000
NBP[1]147*	0.0000	0.0000	0.0000	0.0000	0.0000	0.0000

* Specified by user.

Material Stream: SEP GAS (continued)

Fluid Package: Basis-1
Property Package: Peng-Robinson

COMPOSITION

Aqueous Phase (continued)

Phase Fraction 0.0000

COMPONENTS	MOLAR FLOW (kgmole/h)	MOLE FRACTION	MASS FLOW (tonne/d)	MASS FRACTION	LIQUID VOLUME FLOW (m3/h)	LIQUID VOLUME FRACTION
NBP[1]171*	0.0000	0.0000	0.0000	0.0000	0.0000	0.0000
NBP[1]195*	0.0000	0.0000	0.0000	0.0000	0.0000	0.0000
NBP[1]222*	0.0000	0.0000	0.0000	0.0000	0.0000	0.0000
NBP[1]248*	0.0000	0.0000	0.0000	0.0000	0.0000	0.0000
NBP[1]273*	0.0000	0.0000	0.0000	0.0000	0.0000	0.0000
NBP[1]299*	0.0000	0.0000	0.0000	0.0000	0.0000	0.0000
NBP[1]325*	0.0000	0.0000	0.0000	0.0000	0.0000	0.0000
NBP[1]351*	0.0000	0.0000	0.0000	0.0000	0.0000	0.0000
NBP[1]377*	0.0000	0.0000	0.0000	0.0000	0.0000	0.0000
NBP[1]402*	0.0000	0.0000	0.0000	0.0000	0.0000	0.0000
NBP[1]428*	0.0000	0.0000	0.0000	0.0000	0.0000	0.0000
NBP[1]454*	0.0000	0.0000	0.0000	0.0000	0.0000	0.0000
NBP[1]480*	0.0000	0.0000	0.0000	0.0000	0.0000	0.0000
NBP[1]505*	0.0000	0.0000	0.0000	0.0000	0.0000	0.0000
NBP[1]531*	0.0000	0.0000	0.0000	0.0000	0.0000	0.0000
NBP[1]557*	0.0000	0.0000	0.0000	0.0000	0.0000	0.0000
NBP[1]582*	0.0000	0.0000	0.0000	0.0000	0.0000	0.0000
NBP[1]608*	0.0000	0.0000	0.0000	0.0000	0.0000	0.0000
NBP[1]634*	0.0000	0.0000	0.0000	0.0000	0.0000	0.0000
NBP[1]659*	0.0000	0.0000	0.0000	0.0000	0.0000	0.0000
NBP[1]685*	0.0000	0.0000	0.0000	0.0000	0.0000	0.0000
NBP[1]711*	0.0000	0.0000	0.0000	0.0000	0.0000	0.0000
NBP[1]736*	0.0000	0.0000	0.0000	0.0000	0.0000	0.0000
NBP[1]762*	0.0000	0.0000	0.0000	0.0000	0.0000	0.0000
NBP[1]788*	0.0000	0.0000	0.0000	0.0000	0.0000	0.0000
NBP[1]825*	0.0000	0.0000	0.0000	0.0000	0.0000	0.0000
NBP[1]873*	0.0000	0.0000	0.0000	0.0000	0.0000	0.0000
NBP[1]926*	0.0000	0.0000	0.0000	0.0000	0.0000	0.0000
NBP[1]978*	0.0000	0.0000	0.0000	0.0000	0.0000	0.0000
NBP[1]1021*	0.0000	0.0000	0.0000	0.0000	0.0000	0.0000
NBP[1]1075*	0.0000	0.0000	0.0000	0.0000	0.0000	0.0000
NBP[1]1123*	0.0000	0.0000	0.0000	0.0000	0.0000	0.0000
NBP[1]1173*	0.0000	0.0000	0.0000	0.0000	0.0000	0.0000
NBP[1]1250*	0.0000	0.0000	0.0000	0.0000	0.0000	0.0000
NBP[1]1339*	0.0000	0.0000	0.0000	0.0000	0.0000	0.0000
NBP[1]1432*	0.0000	0.0000	0.0000	0.0000	0.0000	0.0000
NBP[1]1528*	0.0000	0.0000	0.0000	0.0000	0.0000	0.0000
NBP[1]1637*	0.0000	0.0000	0.0000	0.0000	0.0000	0.0000
NBP[1]1732*	0.0000	0.0000	0.0000	0.0000	0.0000	0.0000
NBP[1]1819*	0.0000	0.0000	0.0000	0.0000	0.0000	0.0000
NBP[1]1913*	0.0000	0.0000	0.0000	0.0000	0.0000	0.0000
Total	0.0000	1.0000	0.0000	1.0000	0.0000	1.0000

Material Stream: Sinjhoro Plant

Fluid Package: Basis-1
Property Package: Peng-Robinson

CONDITIONS

		Overall	Vapour Phase	Liquid Phase	Aqueous Phase
Vapour / Phase Fraction		0.6795	0.6795	0.0494	0.2711
Temperature:	(F)	96.33	96.33	96.33	96.33
Pressure:	(psig)	650.0	650.0	650.0	650.0
Molar Flow	(MMSCFD)	7.874	5.350	0.3887	2.135
Mass Flow	(tonne/d)	237.5	137.1	54.50	46.00
Std Ideal Liq Vol Flow	(barrel/day)	3142	2390	462.2	290.0

* Specified by user.

Material Stream: Sinjhoro Plant (continued)

Fluid Package: Basis-1
Property Package: Peng-Robinson

CONDITIONS

	Overall	Vapour Phase	Liquid Phase	Aqueous Phase
Molar Enthalpy (kJ/kgmole)	-1.514e+005	-8.942e+004	-2.695e+005	-2.854e+005
Molar Entropy (kJ/kgmole-C)	132.2	156.4	215.9	56.44
Heat Flow (MMBtu/hr)	-56.29	-22.59	-4.946	-28.76
Liq Vol Flow @Std Cond (barrel/day)	2.954e+005 *	9.473e+005	444.6	285.1

PROPERTIES

	Overall	Vapour Phase	Liquid Phase	Aqueous Phase
Molecular Weight	25.24	21.43	117.3	18.03
Molar Density (kgmole/m3)	2.935	2.071	6.399	55.51
Mass Density (kg/m3)	74.09	44.39	750.5	1001
Act. Volume Flow (barrel/day)	2.017e+004	1.942e+004	456.7	289.1
Mass Enthalpy (kJ/kg)	-6000	-4173	-2298	-1.583e+004
Mass Entropy (kJ/kg-C)	5.239	7.297	1.841	3.131
Heat Capacity (kJ/kgmole-C)	67.09	50.24	241.1	77.63
Mass Heat Capacity (kJ/kg-C)	2.658	2.344	2.055	4.306
LHV Molar Basis (Std) (Btu/SCF)	---	---	---	3.322e-004
LHV Mass Basis (Std) (kJ/kg)	---	---	---	1.627e-002
Phase Fraction [Vol. Basis]	0.7606	0.7606	0.1471	9.229e-002
Phase Fraction [Mass Basis]	0.5769	0.5769	0.2294	0.1936
Partial Pressure of CO2 (psig)	7.861	---	---	---
Cost Based on Flow (Cost/s)	0.0000	0.0000	0.0000	0.0000
Act. Gas Flow (ACT_m3/h)	128.7	128.7	---	---
Avg. Liq. Density (kgmole/m3)	18.84	16.83	6.323	55.35
Specific Heat (kJ/kgmole-C)	67.09	50.24	241.1	77.63
Std. Gas Flow (STD_m3/h)	9272	6301	457.8	2514
Std. Ideal Liq. Mass Density (kg/m3)	475.5	360.7	741.6	997.7
Act. Liq. Flow (barrel/day)	745.8	---	456.7	289.1
Z Factor	---	0.8615	0.2789	3.214e-002
Watson K	15.58	17.25	12.04	8.495
User Property	---	---	---	---
Partial Pressure of H2S (psig)	-14.69	---	---	---
Cp/(Cp - R)	1.141	1.198	1.036	1.120
Cp/Cv	1.191	1.449	1.238	1.153
Heat of Vap. (kJ/kgmole)	6.759e+004	---	---	---
Kinematic Viscosity (cSt)	---	0.2840	6.057	0.7074
Liq. Mass Density (Std. Cond) (kg/m3)	5.058	0.9099	771.0	1015
Liq. Vol. Flow (Std. Cond) (barrel/day)	2.954e+005	9.473e+005	444.6	285.1
Liquid Fraction	0.3205	0.0000	1.000	1.000
Molar Volume (m3/kgmole)	0.3407	0.4828	0.1563	1.801e-002
Mass Heat of Vap. (kJ/kg)	2678	---	---	---
Phase Fraction [Molar Basis]	0.6795	0.6795	0.0494	0.2711
Surface Tension (dyne/cm)	---	---	14.18	70.20
Thermal Conductivity (W/m-K)	---	3.536e-002	9.620e-002	0.6260
Viscosity (cP)	---	1.261e-002	4.546	0.7079
Cv (Semi-Ideal) (kJ/kgmole-C)	58.77	41.93	232.8	69.31
Mass Cv (Semi-Ideal) (kJ/kg-C)	2.329	1.956	1.985	3.845
Cv (kJ/kgmole-C)	56.32	34.67	194.7	67.35
Mass Cv (kJ/kg-C)	2.232	1.618	1.660	3.736
Cv (Ent. Method) (kJ/kgmole-C)	---	---	---	66.70
Mass Cv (Ent. Method) (kJ/kg-C)	---	---	---	3.700
Cp/Cv (Ent. Method)	---	---	---	1.164
Reid VP at 37.8 C (psig)	3319	---	135.3	---
True VP at 37.8 C (psig)	6318	3721	659.9	33.47
Liq. Vol. Flow - Sum(Std. Cond) (barrel/day)	9.481e+005	9.473e+005	444.6	285.1
HHV Molar Basis (Std) (Btu/SCF)	---	---	---	46.44
HHV Mass Basis (Std) (kJ/kg)	---	---	---	2274
CO2 Loading	---	---	---	---

* Specified by user.

Material Stream: Sinjhoro Plant (continued)

Fluid Package: Basis-1
Property Package: Peng-Robinson

PROPERTIES

	Overall	Vapour Phase	Liquid Phase	Aqueous Phase
CO2 App ML Con (kgmole/m3)	---	---	0.1064	2.606e-002
CO2 App WT Con (kgmol/kg)	---	---	1.418e-004	2.604e-005
Phase Fraction [Act. Vol. Basis]	0.9630	0.9630	2.265e-002	1.434e-002
Mass Exergy (kJ/kg)	256.0	---	---	---
Viscosity Index	-18.35	---	---	---
Ideal Gas Cp/Cv	1.214	1.245	1.046	1.328
Ideal Gas Cp (kJ/kgmole-C)	47.15	42.19	189.7	33.64
Mass Ideal Gas Cp (kJ/kg-C)	1.868	1.969	1.618	1.866
Bubble Point Pressure (psig)	6259	---	---	---

COMPOSITION

Overall Phase

Vapour Fraction 0.6795

COMPONENTS	MOLAR FLOW (kgmole/h)	MOLE FRACTION	MASS FLOW (tonne/d)	MASS FRACTION	LIQUID VOLUME FLOW (m3/h)	LIQUID VOLUME FRACTION
Methane	207.0440	0.5280	79.7181	0.3356	11.0944	0.5330
Ethane	28.8006	0.0734	20.7848	0.0875	2.4348	0.1170
Propane	15.2677	0.0389	16.1583	0.0680	1.3288	0.0638
i-Butane	2.0287	0.0052	2.8300	0.0119	0.2098	0.0101
n-Butane	3.9513	0.0101	5.5120	0.0232	0.3938	0.0189
i-Pentane	0.8495	0.0022	1.4710	0.0062	0.0983	0.0047
n-Pentane	0.9602	0.0024	1.6627	0.0070	0.1100	0.0053
n-Hexane	1.4698	0.0037	3.0399	0.0128	0.1911	0.0092
Nitrogen	5.5989	0.0143	3.7642	0.0158	0.1945	0.0093
CO2	9.4151	0.0240	9.9445	0.0419	0.5020	0.0241
H2S	0.0006	0.0000	0.0005	0.0000	0.0000	0.0000
H2O	106.6990	0.2721	46.1326	0.1942	1.9261	0.0925
NBP[1]95*	0.2883	0.0007	0.4699	0.0020	0.0288	0.0014
NBP[1]121*	0.3381	0.0009	0.5912	0.0025	0.0358	0.0017
NBP[1]147*	0.4314	0.0011	0.8304	0.0035	0.0494	0.0024
NBP[1]171*	0.8224	0.0021	1.7306	0.0073	0.1013	0.0049
NBP[1]195*	1.0758	0.0027	2.4160	0.0102	0.1398	0.0067
NBP[1]222*	0.8003	0.0020	1.9331	0.0081	0.1105	0.0053
NBP[1]248*	0.6657	0.0017	1.7287	0.0073	0.0976	0.0047
NBP[1]273*	0.5358	0.0014	1.4881	0.0063	0.0831	0.0040
NBP[1]299*	0.4185	0.0011	1.2393	0.0052	0.0684	0.0033
NBP[1]325*	0.3029	0.0008	0.9528	0.0040	0.0521	0.0025
NBP[1]351*	0.2456	0.0006	0.8214	0.0035	0.0445	0.0021
NBP[1]377*	0.2247	0.0006	0.8014	0.0034	0.0429	0.0021
NBP[1]402*	0.2061	0.0005	0.7838	0.0033	0.0416	0.0020
NBP[1]428*	0.1961	0.0005	0.7956	0.0033	0.0418	0.0020
NBP[1]454*	0.1956	0.0005	0.8480	0.0036	0.0441	0.0021
NBP[1]480*	0.1982	0.0005	0.9182	0.0039	0.0473	0.0023
NBP[1]505*	0.1920	0.0005	0.9484	0.0040	0.0484	0.0023
NBP[1]531*	0.1852	0.0005	0.9740	0.0041	0.0492	0.0024
NBP[1]557*	0.1784	0.0005	0.9978	0.0042	0.0500	0.0024
NBP[1]582*	0.1706	0.0004	1.0132	0.0043	0.0503	0.0024
NBP[1]608*	0.1643	0.0004	1.0351	0.0044	0.0510	0.0025
NBP[1]634*	0.1611	0.0004	1.0753	0.0045	0.0526	0.0025
NBP[1]659*	0.1586	0.0004	1.1194	0.0047	0.0543	0.0026
NBP[1]685*	0.1641	0.0004	1.2227	0.0051	0.0588	0.0028
NBP[1]711*	0.1715	0.0004	1.3445	0.0057	0.0642	0.0031
NBP[1]736*	0.1697	0.0004	1.3915	0.0059	0.0659	0.0032
NBP[1]762*	0.1653	0.0004	1.4214	0.0060	0.0669	0.0032
NBP[1]788*	0.1585	0.0004	1.4424	0.0061	0.0674	0.0032
NBP[1]825*	0.2655	0.0007	2.5963	0.0109	0.1201	0.0058
NBP[1]873*	0.1830	0.0005	1.9404	0.0082	0.0887	0.0043

* Specified by user.

Material Stream: Sinjhoro Plant (continued)

Fluid Package: Basis-1
Property Package: Peng-Robinson

COMPOSITION

Overall Phase (continued)

Vapour Fraction 0.6795

COMPONENTS	MOLAR FLOW (kgmole/h)	MOLE FRACTION	MASS FLOW (tonne/d)	MASS FRACTION	LIQUID VOLUME FLOW (m3/h)	LIQUID VOLUME FRACTION
NBP[1]926*	0.1437	0.0004	1.6472	0.0069	0.0744	0.0036
NBP[1]978*	0.1474	0.0004	1.8524	0.0078	0.0825	0.0040
NBP[1]1021*	0.0728	0.0002	0.9655	0.0041	0.0426	0.0020
NBP[1]1075*	0.0449	0.0001	0.6310	0.0027	0.0276	0.0013
NBP[1]1123*	0.0417	0.0001	0.6267	0.0026	0.0271	0.0013
NBP[1]1173*	0.0300	0.0001	0.4772	0.0020	0.0205	0.0010
NBP[1]1250*	0.0393	0.0001	0.6767	0.0028	0.0287	0.0014
NBP[1]1339*	0.0364	0.0001	0.6999	0.0029	0.0291	0.0014
NBP[1]1432*	0.0257	0.0001	0.5397	0.0023	0.0221	0.0011
NBP[1]1528*	0.0180	0.0000	0.4082	0.0017	0.0165	0.0008
NBP[1]1637*	0.0127	0.0000	0.3047	0.0013	0.0122	0.0006
NBP[1]1732*	0.0101	0.0000	0.2565	0.0011	0.0101	0.0005
NBP[1]1819*	0.0097	0.0000	0.2590	0.0011	0.0101	0.0005
NBP[1]1913*	0.0112	0.0000	0.3148	0.0013	0.0121	0.0006
Total	392.1623	1.0000	237.5489	1.0000	20.8162	1.0000

Vapour Phase

Phase Fraction 0.6795

COMPONENTS	MOLAR FLOW (kgmole/h)	MOLE FRACTION	MASS FLOW (tonne/d)	MASS FRACTION	LIQUID VOLUME FLOW (m3/h)	LIQUID VOLUME FRACTION
Methane	204.0796	0.7658	78.5767	0.5733	10.9355	0.6907
Ethane	27.3234	0.1025	19.7187	0.1439	2.3100	0.1459
Propane	13.3253	0.0500	14.1025	0.1029	1.1597	0.0732
i-Butane	1.5558	0.0058	2.1702	0.0158	0.1609	0.0102
n-Butane	2.8316	0.0106	3.9500	0.0288	0.2822	0.0178
i-Pentane	0.4661	0.0017	0.8072	0.0059	0.0539	0.0034
n-Pentane	0.4732	0.0018	0.8194	0.0060	0.0542	0.0034
n-Hexane	0.4069	0.0015	0.8416	0.0061	0.0529	0.0033
Nitrogen	5.5622	0.0209	3.7395	0.0273	0.1932	0.0122
CO2	9.0433	0.0339	9.5518	0.0697	0.4822	0.0305
H2S	0.0005	0.0000	0.0004	0.0000	0.0000	0.0000
H2O	0.4135	0.0016	0.1788	0.0013	0.0075	0.0005
NBP[1]95*	0.1440	0.0005	0.2347	0.0017	0.0144	0.0009
NBP[1]121*	0.1368	0.0005	0.2391	0.0017	0.0145	0.0009
NBP[1]147*	0.1346	0.0005	0.2591	0.0019	0.0154	0.0010
NBP[1]171*	0.1933	0.0007	0.4067	0.0030	0.0238	0.0015
NBP[1]195*	0.1840	0.0007	0.4133	0.0030	0.0239	0.0015
NBP[1]222*	0.0904	0.0003	0.2183	0.0016	0.0125	0.0008
NBP[1]248*	0.0490	0.0002	0.1272	0.0009	0.0072	0.0005
NBP[1]273*	0.0250	0.0001	0.0695	0.0005	0.0039	0.0002
NBP[1]299*	0.0121	0.0000	0.0359	0.0003	0.0020	0.0001
NBP[1]325*	0.0052	0.0000	0.0164	0.0001	0.0009	0.0001
NBP[1]351*	0.0025	0.0000	0.0082	0.0001	0.0004	0.0000
NBP[1]377*	0.0013	0.0000	0.0045	0.0000	0.0002	0.0000
NBP[1]402*	0.0006	0.0000	0.0024	0.0000	0.0001	0.0000
NBP[1]428*	0.0003	0.0000	0.0013	0.0000	0.0001	0.0000
NBP[1]454*	0.0002	0.0000	0.0008	0.0000	0.0000	0.0000
NBP[1]480*	0.0001	0.0000	0.0004	0.0000	0.0000	0.0000
NBP[1]505*	0.0000	0.0000	0.0002	0.0000	0.0000	0.0000
NBP[1]531*	0.0000	0.0000	0.0001	0.0000	0.0000	0.0000
NBP[1]557*	0.0000	0.0000	0.0001	0.0000	0.0000	0.0000
NBP[1]582*	0.0000	0.0000	0.0000	0.0000	0.0000	0.0000
NBP[1]608*	0.0000	0.0000	0.0000	0.0000	0.0000	0.0000
NBP[1]634*	0.0000	0.0000	0.0000	0.0000	0.0000	0.0000
NBP[1]659*	0.0000	0.0000	0.0000	0.0000	0.0000	0.0000

* Specified by user.

Material Stream: Sinjhoro Plant (continued)

Fluid Package: Basis-1
Property Package: Peng-Robinson

COMPOSITION

Vapour Phase (continued)

Phase Fraction 0.6795

COMPONENTS	MOLAR FLOW (kgmole/h)	MOLE FRACTION	MASS FLOW (tonne/d)	MASS FRACTION	LIQUID VOLUME FLOW (m3/h)	LIQUID VOLUME FRACTION
NBP[1]685*	0.0000	0.0000	0.0000	0.0000	0.0000	0.0000
NBP[1]711*	0.0000	0.0000	0.0000	0.0000	0.0000	0.0000
NBP[1]736*	0.0000	0.0000	0.0000	0.0000	0.0000	0.0000
NBP[1]762*	0.0000	0.0000	0.0000	0.0000	0.0000	0.0000
NBP[1]788*	0.0000	0.0000	0.0000	0.0000	0.0000	0.0000
NBP[1]825*	0.0000	0.0000	0.0000	0.0000	0.0000	0.0000
NBP[1]873*	0.0000	0.0000	0.0000	0.0000	0.0000	0.0000
NBP[1]926*	0.0000	0.0000	0.0000	0.0000	0.0000	0.0000
NBP[1]978*	0.0000	0.0000	0.0000	0.0000	0.0000	0.0000
NBP[1]1021*	0.0000	0.0000	0.0000	0.0000	0.0000	0.0000
NBP[1]1075*	0.0000	0.0000	0.0000	0.0000	0.0000	0.0000
NBP[1]1123*	0.0000	0.0000	0.0000	0.0000	0.0000	0.0000
NBP[1]1173*	0.0000	0.0000	0.0000	0.0000	0.0000	0.0000
NBP[1]1250*	0.0000	0.0000	0.0000	0.0000	0.0000	0.0000
NBP[1]1339*	0.0000	0.0000	0.0000	0.0000	0.0000	0.0000
NBP[1]1432*	0.0000	0.0000	0.0000	0.0000	0.0000	0.0000
NBP[1]1528*	0.0000	0.0000	0.0000	0.0000	0.0000	0.0000
NBP[1]1637*	0.0000	0.0000	0.0000	0.0000	0.0000	0.0000
NBP[1]1732*	0.0000	0.0000	0.0000	0.0000	0.0000	0.0000
NBP[1]1819*	0.0091	0.0000	0.2419	0.0018	0.0094	0.0006
NBP[1]1913*	0.0112	0.0000	0.3148	0.0023	0.0121	0.0008
Total	266.4811	1.0000	137.0519	1.0000	15.8332	1.0000

Liquid Phase

Phase Fraction 4.937e-002

COMPONENTS	MOLAR FLOW (kgmole/h)	MOLE FRACTION	MASS FLOW (tonne/d)	MASS FRACTION	LIQUID VOLUME FLOW (m3/h)	LIQUID VOLUME FRACTION
Methane	2.9643	0.1531	1.1414	0.0209	0.1588	0.0519
Ethane	1.4772	0.0763	1.0661	0.0196	0.1249	0.0408
Propane	1.9425	0.1003	2.0558	0.0377	0.1691	0.0552
i-Butane	0.4729	0.0244	0.6597	0.0121	0.0489	0.0160
n-Butane	1.1197	0.0578	1.5619	0.0287	0.1116	0.0364
i-Pentane	0.3834	0.0198	0.6638	0.0122	0.0444	0.0145
n-Pentane	0.4870	0.0252	0.8433	0.0155	0.0558	0.0182
n-Hexane	1.0629	0.0549	2.1983	0.0403	0.1382	0.0451
Nitrogen	0.0356	0.0018	0.0239	0.0004	0.0012	0.0004
CO2	0.3219	0.0166	0.3400	0.0062	0.0172	0.0056
H2S	0.0000	0.0000	0.0000	0.0000	0.0000	0.0000
H2O	0.0155	0.0008	0.0067	0.0001	0.0003	0.0001
NBP[1]95*	0.1443	0.0075	0.2352	0.0043	0.0144	0.0047
NBP[1]121*	0.2014	0.0104	0.3521	0.0065	0.0213	0.0070
NBP[1]147*	0.2968	0.0153	0.5713	0.0105	0.0340	0.0111
NBP[1]171*	0.6292	0.0325	1.3239	0.0243	0.0775	0.0253
NBP[1]195*	0.8917	0.0461	2.0027	0.0367	0.1159	0.0378
NBP[1]222*	0.7100	0.0367	1.7148	0.0315	0.0980	0.0320
NBP[1]248*	0.6167	0.0319	1.6015	0.0294	0.0904	0.0295
NBP[1]273*	0.5108	0.0264	1.4186	0.0260	0.0792	0.0259
NBP[1]299*	0.4064	0.0210	1.2034	0.0221	0.0665	0.0217
NBP[1]325*	0.2976	0.0154	0.9363	0.0172	0.0512	0.0167
NBP[1]351*	0.2432	0.0126	0.8132	0.0149	0.0440	0.0144
NBP[1]377*	0.2235	0.0115	0.7969	0.0146	0.0427	0.0139
NBP[1]402*	0.2055	0.0106	0.7814	0.0143	0.0414	0.0135
NBP[1]428*	0.1957	0.0101	0.7942	0.0146	0.0417	0.0136
NBP[1]454*	0.1954	0.0101	0.8473	0.0155	0.0441	0.0144
NBP[1]480*	0.1981	0.0102	0.9177	0.0168	0.0472	0.0154

* Specified by user.

Material Stream: Sinjhoro Plant (continued)

Fluid Package: Basis-1
Property Package: Peng-Robinson

COMPOSITION

Liquid Phase (continued)

Phase Fraction 4.937e-002

COMPONENTS	MOLAR FLOW (kgmole/h)	MOLE FRACTION	MASS FLOW (tonne/d)	MASS FRACTION	LIQUID VOLUME FLOW (m3/h)	LIQUID VOLUME FRACTION
NBP[1]505*	0.1920	0.0099	0.9481	0.0174	0.0484	0.0158
NBP[1]531*	0.1852	0.0096	0.9739	0.0179	0.0492	0.0161
NBP[1]557*	0.1784	0.0092	0.9978	0.0183	0.0500	0.0163
NBP[1]582*	0.1706	0.0088	1.0132	0.0186	0.0503	0.0164
NBP[1]608*	0.1643	0.0085	1.0351	0.0190	0.0510	0.0167
NBP[1]634*	0.1611	0.0083	1.0753	0.0197	0.0526	0.0172
NBP[1]659*	0.1586	0.0082	1.1194	0.0205	0.0543	0.0177
NBP[1]685*	0.1641	0.0085	1.2227	0.0224	0.0588	0.0192
NBP[1]711*	0.1715	0.0089	1.3445	0.0247	0.0642	0.0210
NBP[1]736*	0.1697	0.0088	1.3915	0.0255	0.0659	0.0215
NBP[1]762*	0.1653	0.0085	1.4214	0.0261	0.0669	0.0218
NBP[1]788*	0.1585	0.0082	1.4424	0.0265	0.0674	0.0220
NBP[1]825*	0.2655	0.0137	2.5963	0.0476	0.1201	0.0392
NBP[1]873*	0.1830	0.0095	1.9404	0.0356	0.0887	0.0290
NBP[1]926*	0.1437	0.0074	1.6472	0.0302	0.0744	0.0243
NBP[1]978*	0.1474	0.0076	1.8524	0.0340	0.0825	0.0269
NBP[1]1021*	0.0728	0.0038	0.9655	0.0177	0.0426	0.0139
NBP[1]1075*	0.0449	0.0023	0.6310	0.0116	0.0276	0.0090
NBP[1]1123*	0.0417	0.0022	0.6267	0.0115	0.0271	0.0089
NBP[1]1173*	0.0300	0.0015	0.4772	0.0088	0.0205	0.0067
NBP[1]1250*	0.0393	0.0020	0.6767	0.0124	0.0287	0.0094
NBP[1]1339*	0.0364	0.0019	0.6999	0.0128	0.0291	0.0095
NBP[1]1432*	0.0257	0.0013	0.5397	0.0099	0.0221	0.0072
NBP[1]1528*	0.0180	0.0009	0.4082	0.0075	0.0165	0.0054
NBP[1]1637*	0.0127	0.0007	0.3047	0.0056	0.0122	0.0040
NBP[1]1732*	0.0101	0.0005	0.2565	0.0047	0.0101	0.0033
NBP[1]1819*	0.0006	0.0000	0.0171	0.0003	0.0007	0.0002
NBP[1]1913*	0.0000	0.0000	0.0000	0.0000	0.0000	0.0000
Total	19.3601	1.0000	54.4963	1.0000	3.0619	1.0000

Aqueous Phase

Phase Fraction 0.2711

COMPONENTS	MOLAR FLOW (kgmole/h)	MOLE FRACTION	MASS FLOW (tonne/d)	MASS FRACTION	LIQUID VOLUME FLOW (m3/h)	LIQUID VOLUME FRACTION
Methane	0.0000	0.0000	0.0000	0.0000	0.0000	0.0000
Ethane	0.0000	0.0000	0.0000	0.0000	0.0000	0.0000
Propane	0.0000	0.0000	0.0000	0.0000	0.0000	0.0000
i-Butane	0.0000	0.0000	0.0000	0.0000	0.0000	0.0000
n-Butane	0.0000	0.0000	0.0000	0.0000	0.0000	0.0000
i-Pentane	0.0000	0.0000	0.0000	0.0000	0.0000	0.0000
n-Pentane	0.0000	0.0000	0.0000	0.0000	0.0000	0.0000
n-Hexane	0.0000	0.0000	0.0000	0.0000	0.0000	0.0000
Nitrogen	0.0011	0.0000	0.0007	0.0000	0.0000	0.0000
CO2	0.0499	0.0005	0.0527	0.0011	0.0027	0.0014
H2S	0.0000	0.0000	0.0000	0.0000	0.0000	0.0000
H2O	106.2700	0.9995	45.9472	0.9988	1.9183	0.9986
NBP[1]95*	0.0000	0.0000	0.0000	0.0000	0.0000	0.0000
NBP[1]121*	0.0000	0.0000	0.0000	0.0000	0.0000	0.0000
NBP[1]147*	0.0000	0.0000	0.0000	0.0000	0.0000	0.0000
NBP[1]171*	0.0000	0.0000	0.0000	0.0000	0.0000	0.0000
NBP[1]195*	0.0000	0.0000	0.0000	0.0000	0.0000	0.0000
NBP[1]222*	0.0000	0.0000	0.0000	0.0000	0.0000	0.0000
NBP[1]248*	0.0000	0.0000	0.0000	0.0000	0.0000	0.0000
NBP[1]273*	0.0000	0.0000	0.0000	0.0000	0.0000	0.0000
NBP[1]299*	0.0000	0.0000	0.0000	0.0000	0.0000	0.0000

* Specified by user.

Material Stream: Sinjhoro Plant (continued)

Fluid Package: Basis-1
Property Package: Peng-Robinson

COMPOSITION

Aqueous Phase (continued)

Phase Fraction 0.2711

COMPONENTS	MOLAR FLOW (kgmole/h)	MOLE FRACTION	MASS FLOW (tonne/d)	MASS FRACTION	LIQUID VOLUME FLOW (m3/h)	LIQUID VOLUME FRACTION
NBP[1]325*	0.0000	0.0000	0.0000	0.0000	0.0000	0.0000
NBP[1]351*	0.0000	0.0000	0.0000	0.0000	0.0000	0.0000
NBP[1]377*	0.0000	0.0000	0.0000	0.0000	0.0000	0.0000
NBP[1]402*	0.0000	0.0000	0.0000	0.0000	0.0000	0.0000
NBP[1]428*	0.0000	0.0000	0.0000	0.0000	0.0000	0.0000
NBP[1]454*	0.0000	0.0000	0.0000	0.0000	0.0000	0.0000
NBP[1]480*	0.0000	0.0000	0.0000	0.0000	0.0000	0.0000
NBP[1]505*	0.0000	0.0000	0.0000	0.0000	0.0000	0.0000
NBP[1]531*	0.0000	0.0000	0.0000	0.0000	0.0000	0.0000
NBP[1]557*	0.0000	0.0000	0.0000	0.0000	0.0000	0.0000
NBP[1]582*	0.0000	0.0000	0.0000	0.0000	0.0000	0.0000
NBP[1]608*	0.0000	0.0000	0.0000	0.0000	0.0000	0.0000
NBP[1]634*	0.0000	0.0000	0.0000	0.0000	0.0000	0.0000
NBP[1]659*	0.0000	0.0000	0.0000	0.0000	0.0000	0.0000
NBP[1]685*	0.0000	0.0000	0.0000	0.0000	0.0000	0.0000
NBP[1]711*	0.0000	0.0000	0.0000	0.0000	0.0000	0.0000
NBP[1]736*	0.0000	0.0000	0.0000	0.0000	0.0000	0.0000
NBP[1]762*	0.0000	0.0000	0.0000	0.0000	0.0000	0.0000
NBP[1]788*	0.0000	0.0000	0.0000	0.0000	0.0000	0.0000
NBP[1]825*	0.0000	0.0000	0.0000	0.0000	0.0000	0.0000
NBP[1]873*	0.0000	0.0000	0.0000	0.0000	0.0000	0.0000
NBP[1]926*	0.0000	0.0000	0.0000	0.0000	0.0000	0.0000
NBP[1]978*	0.0000	0.0000	0.0000	0.0000	0.0000	0.0000
NBP[1]1021*	0.0000	0.0000	0.0000	0.0000	0.0000	0.0000
NBP[1]1075*	0.0000	0.0000	0.0000	0.0000	0.0000	0.0000
NBP[1]1123*	0.0000	0.0000	0.0000	0.0000	0.0000	0.0000
NBP[1]1173*	0.0000	0.0000	0.0000	0.0000	0.0000	0.0000
NBP[1]1250*	0.0000	0.0000	0.0000	0.0000	0.0000	0.0000
NBP[1]1339*	0.0000	0.0000	0.0000	0.0000	0.0000	0.0000
NBP[1]1432*	0.0000	0.0000	0.0000	0.0000	0.0000	0.0000
NBP[1]1528*	0.0000	0.0000	0.0000	0.0000	0.0000	0.0000
NBP[1]1637*	0.0000	0.0000	0.0000	0.0000	0.0000	0.0000
NBP[1]1732*	0.0000	0.0000	0.0000	0.0000	0.0000	0.0000
NBP[1]1819*	0.0000	0.0000	0.0000	0.0000	0.0000	0.0000
NBP[1]1913*	0.0000	0.0000	0.0000	0.0000	0.0000	0.0000
Total	106.3211	1.0000	46.0006	1.0000	1.9210	1.0000

Material Stream: Water-PRD

Fluid Package: Basis-1
Property Package: Peng-Robinson

CONDITIONS

		Overall				
Vapour / Phase Fraction		---				
Temperature:	(F)	---				
Pressure:	(psig)	450.0 *				
Molar Flow	(MMSCFD)	2.142				
Mass Flow	(tonne/d)	46.13				
Std Ideal Liq Vol Flow	(barrel/day)	290.7				
Molar Enthalpy	(kJ/kgmole)	---				
Molar Entropy	(kJ/kgmole-C)	---				
Heat Flow	(MMBtu/hr)	---				
Liq Vol Flow @Std Cond	(barrel/day)	285.9 *				

* Specified by user.

Material Stream: Water-PRD (continued)

Fluid Package: Basis-1
Property Package: Peng-Robinson

PROPERTIES

	Overall
Molecular Weight	18.02
Molar Density (kgmole/m3)	---
Mass Density (kg/m3)	---
Act. Volume Flow (barrel/day)	---
Mass Enthalpy (kJ/kg)	---
Mass Entropy (kJ/kg-C)	---
Heat Capacity (kJ/kgmole-C)	---
Mass Heat Capacity (kJ/kg-C)	---
LHV Molar Basis (Std) (Btu/SCF)	0.0000
LHV Mass Basis (Std) (kJ/kg)	0.0000
Phase Fraction [Vol. Basis]	0.0000
Phase Fraction [Mass Basis]	0.0000
Partial Pressure of CO2 (psig)	-14.70
Cost Based on Flow (Cost/s)	0.0000
Act. Gas Flow (ACT_m3/h)	---
Avg. Liq. Density (kgmole/m3)	55.40
Specific Heat (kJ/kgmole-C)	---
Std. Gas Flow (STD_m3/h)	2523
Std. Ideal Liq. Mass Density (kg/m3)	998.0
Act. Liq. Flow (barrel/day)	---
Z Factor	---
Watson K	---
User Property	---
Partial Pressure of H2S (psig)	-14.70
Cp/(Cp - R)	---
Cp/Cv	---
Heat of Vap. (kJ/kgmole)	---
Kinematic Viscosity (cSt)	---
Liq. Mass Density (Std. Cond) (kg/m3)	1015
Liq. Vol. Flow (Std. Cond) (barrel/day)	285.9
Liquid Fraction	---
Molar Volume (m3/kgmole)	---
Mass Heat of Vap. (kJ/kg)	---
Phase Fraction [Molar Basis]	---
Surface Tension (dyne/cm)	---
Thermal Conductivity (W/m-K)	---
Viscosity (cP)	---
Cv (Semi-Ideal) (kJ/kgmole-C)	---
Mass Cv (Semi-Ideal) (kJ/kg-C)	---
Cv (kJ/kgmole-C)	---
Mass Cv (kJ/kg-C)	---
Cv (Ent. Method) (kJ/kgmole-C)	---
Mass Cv (Ent. Method) (kJ/kg-C)	---
Cp/Cv (Ent. Method)	---
Reid VP at 37.8 C (psig)	---
True VP at 37.8 C (psig)	---
Liq. Vol. Flow - Sum(Std. Cond) (barrel/day)	0.0000
HHV Molar Basis (Std) (Btu/SCF)	46.46
HHV Mass Basis (Std) (kJ/kg)	2276
CO2 Loading	---
CO2 App ML Con (kgmole/m3)	---
CO2 App WT Con (kgmol/kg)	0.0000
Phase Fraction [Act. Vol. Basis]	0.0000
Mass Exergy (kJ/kg)	9.753e+006
Viscosity Index	---
Ideal Gas Cp/Cv	1.000
Ideal Gas Cp (kJ/kgmole-C)	1.170e+007

* Specified by user.

Material Stream: Water-PRD (continued)

Fluid Package: Basis-1
Property Package: Peng-Robinson

PROPERTIES

	Overall
Mass Ideal Gas Cp (kJ/kg-C)	6.496e+005
Bubble Point Pressure (psig)	---

COMPOSITION

Overall Phase

Vapour Fraction ---

COMPONENTS	MOLAR FLOW (kgmole/h)	MOLE FRACTION	MASS FLOW (tonne/d)	MASS FRACTION	LIQUID VOLUME FLOW (m3/h)	LIQUID VOLUME FRACTION
Methane	0.0000 *	0.0000 *	0.0000 *	0.0000 *	0.0000 *	0.0000 *
Ethane	0.0000 *	0.0000 *	0.0000 *	0.0000 *	0.0000 *	0.0000 *
Propane	0.0000 *	0.0000 *	0.0000 *	0.0000 *	0.0000 *	0.0000 *
i-Butane	0.0000 *	0.0000 *	0.0000 *	0.0000 *	0.0000 *	0.0000 *
n-Butane	0.0000 *	0.0000 *	0.0000 *	0.0000 *	0.0000 *	0.0000 *
i-Pentane	0.0000 *	0.0000 *	0.0000 *	0.0000 *	0.0000 *	0.0000 *
n-Pentane	0.0000 *	0.0000 *	0.0000 *	0.0000 *	0.0000 *	0.0000 *
n-Hexane	0.0000 *	0.0000 *	0.0000 *	0.0000 *	0.0000 *	0.0000 *
Nitrogen	0.0000 *	0.0000 *	0.0000 *	0.0000 *	0.0000 *	0.0000 *
CO2	0.0000 *	0.0000 *	0.0000 *	0.0000 *	0.0000 *	0.0000 *
H2S	0.0000 *	0.0000 *	0.0000 *	0.0000 *	0.0000 *	0.0000 *
H2O	106.6873 *	1.0000 *	46.1276 *	1.0000 *	1.9259 *	1.0000 *
NBP[1]95*	0.0000 *	0.0000 *	0.0000 *	0.0000 *	0.0000 *	0.0000 *
NBP[1]121*	0.0000 *	0.0000 *	0.0000 *	0.0000 *	0.0000 *	0.0000 *
NBP[1]147*	0.0000 *	0.0000 *	0.0000 *	0.0000 *	0.0000 *	0.0000 *
NBP[1]171*	0.0000 *	0.0000 *	0.0000 *	0.0000 *	0.0000 *	0.0000 *
NBP[1]195*	0.0000 *	0.0000 *	0.0000 *	0.0000 *	0.0000 *	0.0000 *
NBP[1]222*	0.0000 *	0.0000 *	0.0000 *	0.0000 *	0.0000 *	0.0000 *
NBP[1]248*	0.0000 *	0.0000 *	0.0000 *	0.0000 *	0.0000 *	0.0000 *
NBP[1]273*	0.0000 *	0.0000 *	0.0000 *	0.0000 *	0.0000 *	0.0000 *
NBP[1]299*	0.0000 *	0.0000 *	0.0000 *	0.0000 *	0.0000 *	0.0000 *
NBP[1]325*	0.0000 *	0.0000 *	0.0000 *	0.0000 *	0.0000 *	0.0000 *
NBP[1]351*	0.0000 *	0.0000 *	0.0000 *	0.0000 *	0.0000 *	0.0000 *
NBP[1]377*	0.0000 *	0.0000 *	0.0000 *	0.0000 *	0.0000 *	0.0000 *
NBP[1]402*	0.0000 *	0.0000 *	0.0000 *	0.0000 *	0.0000 *	0.0000 *
NBP[1]428*	0.0000 *	0.0000 *	0.0000 *	0.0000 *	0.0000 *	0.0000 *
NBP[1]454*	0.0000 *	0.0000 *	0.0000 *	0.0000 *	0.0000 *	0.0000 *
NBP[1]480*	0.0000 *	0.0000 *	0.0000 *	0.0000 *	0.0000 *	0.0000 *
NBP[1]505*	0.0000 *	0.0000 *	0.0000 *	0.0000 *	0.0000 *	0.0000 *
NBP[1]531*	0.0000 *	0.0000 *	0.0000 *	0.0000 *	0.0000 *	0.0000 *
NBP[1]557*	0.0000 *	0.0000 *	0.0000 *	0.0000 *	0.0000 *	0.0000 *
NBP[1]582*	0.0000 *	0.0000 *	0.0000 *	0.0000 *	0.0000 *	0.0000 *
NBP[1]608*	0.0000 *	0.0000 *	0.0000 *	0.0000 *	0.0000 *	0.0000 *
NBP[1]634*	0.0000 *	0.0000 *	0.0000 *	0.0000 *	0.0000 *	0.0000 *
NBP[1]659*	0.0000 *	0.0000 *	0.0000 *	0.0000 *	0.0000 *	0.0000 *
NBP[1]685*	0.0000 *	0.0000 *	0.0000 *	0.0000 *	0.0000 *	0.0000 *
NBP[1]711*	0.0000 *	0.0000 *	0.0000 *	0.0000 *	0.0000 *	0.0000 *
NBP[1]736*	0.0000 *	0.0000 *	0.0000 *	0.0000 *	0.0000 *	0.0000 *
NBP[1]762*	0.0000 *	0.0000 *	0.0000 *	0.0000 *	0.0000 *	0.0000 *
NBP[1]788*	0.0000 *	0.0000 *	0.0000 *	0.0000 *	0.0000 *	0.0000 *
NBP[1]825*	0.0000 *	0.0000 *	0.0000 *	0.0000 *	0.0000 *	0.0000 *
NBP[1]873*	0.0000 *	0.0000 *	0.0000 *	0.0000 *	0.0000 *	0.0000 *
NBP[1]926*	0.0000 *	0.0000 *	0.0000 *	0.0000 *	0.0000 *	0.0000 *
NBP[1]978*	0.0000 *	0.0000 *	0.0000 *	0.0000 *	0.0000 *	0.0000 *
NBP[1]1021*	0.0000 *	0.0000 *	0.0000 *	0.0000 *	0.0000 *	0.0000 *
NBP[1]1075*	0.0000 *	0.0000 *	0.0000 *	0.0000 *	0.0000 *	0.0000 *
NBP[1]1123*	0.0000 *	0.0000 *	0.0000 *	0.0000 *	0.0000 *	0.0000 *
NBP[1]1173*	0.0000 *	0.0000 *	0.0000 *	0.0000 *	0.0000 *	0.0000 *
NBP[1]1250*	0.0000 *	0.0000 *	0.0000 *	0.0000 *	0.0000 *	0.0000 *

* Specified by user.

Material Stream: Water-PRD (continued)

Fluid Package: Basis-1
Property Package: Peng-Robinson

COMPOSITION

Overall Phase (continued)

Vapour Fraction ---

COMPONENTS	MOLAR FLOW (kgmole/h)	MOLE FRACTION	MASS FLOW (tonne/d)	MASS FRACTION	LIQUID VOLUME FLOW (m3/h)	LIQUID VOLUME FRACTION
NBP[1]1339*	0.0000 *	0.0000 *	0.0000 *	0.0000 *	0.0000 *	0.0000 *
NBP[1]1432*	0.0000 *	0.0000 *	0.0000 *	0.0000 *	0.0000 *	0.0000 *
NBP[1]1528*	0.0000 *	0.0000 *	0.0000 *	0.0000 *	0.0000 *	0.0000 *
NBP[1]1637*	0.0000 *	0.0000 *	0.0000 *	0.0000 *	0.0000 *	0.0000 *
NBP[1]1732*	0.0000 *	0.0000 *	0.0000 *	0.0000 *	0.0000 *	0.0000 *
NBP[1]1819*	0.0000 *	0.0000 *	0.0000 *	0.0000 *	0.0000 *	0.0000 *
NBP[1]1913*	0.0000 *	0.0000 *	0.0000 *	0.0000 *	0.0000 *	0.0000 *
Total	106.6873	1.0000	46.1276	1.0000	1.9259	1.0000

Licensed to: PETROCHEMICAL ENGINEERIN
* Specified by user.

ANNEXURE-E

HP Separation @ 1240 psig with new line heater

Case-3A

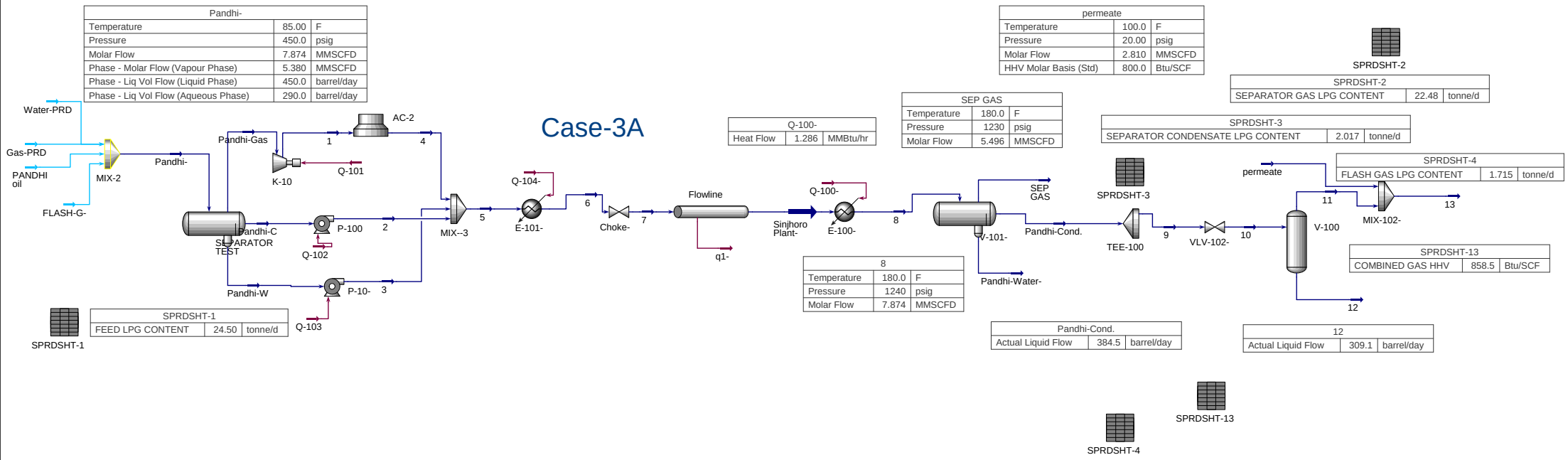

Pandhi-		
Temperature	85.00	F
Pressure	450.0	psig
Molar Flow	7.874	MMSCFD
Phase - Molar Flow (Vapour Phase)	5.380	MMSCFD
Phase - Liq Vol Flow (Liquid Phase)	450.0	barrel/day
Phase - Liq Vol Flow (Aqueous Phase)	290.0	barrel/day

Q-100-		
Heat Flow	1.286	MMBtu/hr

SEP GAS		
Temperature	180.0	F
Pressure	1230	psig
Molar Flow	5.496	MMSCFD

permeate		
Temperature	100.0	F
Pressure	20.00	psig
Molar Flow	2.810	MMSCFD
HHV Molar Basis (Std)	800.0	Btu/SCF

SPRDSHT-2		
SEPARATOR GAS LPG CONTENT	22.48	tonne/d

SPRDSHT-3		
SEPARATOR CONDENSATE LPG CONTENT	2.017	tonne/d

SPRDSHT-4		
FLASH GAS LPG CONTENT	1.715	tonne/d

SPRDSHT-13		
COMBINED GAS HHV	858.5	Btu/SCF

8		
Temperature	180.0	F
Pressure	1240	psig
Molar Flow	7.874	MMSCFD

SPRDSHT-1		
FEED LPG CONTENT	24.50	tonne/d

Pandhi-Cond.		
Actual Liquid Flow	384.5	barrel/day

12		
Actual Liquid Flow	309.1	barrel/day

Petrochemical Engineering Consultants Karachi, Pakistan	Case Name:	CASE-3A.hsc
	Unit Set:	NewUser5e
	Date/Time:	Fri Mar 20 18:23:55 2020

Material Stream: 1

Fluid Package: Basis-1

Property Package: Peng-Robinson

CONDITIONS

	Overall	Vapour Phase	Liquid Phase		
Vapour / Phase Fraction	0.9999	0.9999	0.0001		
Temperature: (F)	329.4	329.4	329.4		
Pressure: (psig)	2095 *	2095	2095		
Molar Flow (MMSCFD)	5.381	5.381	5.240e-004		
Mass Flow (tonne/d)	137.6	137.2	0.3260		
Std Ideal Liq Vol Flow (barrel/day)	2403	2401	1.982		
Molar Enthalpy (kJ/kgmole)	-8.389e+004	-8.380e+004	-9.628e+005		
Molar Entropy (kJ/kgmole-C)	162.4	162.3	1655		
Heat Flow (MMBtu/hr)	-21.31	-21.29	-2.382e-002		
Liq Vol Flow @Std Cond (barrel/day)	9.528e+005 *	9.528e+005	2.085		

PROPERTIES

	Overall	Vapour Phase	Liquid Phase		
Molecular Weight	21.39	21.34	520.4		
Molar Density (kgmole/m3)	4.261	4.261	1.702		
Mass Density (kg/m3)	91.12	90.93	885.8		
Act. Volume Flow (barrel/day)	9496	9493	2.315		
Mass Enthalpy (kJ/kg)	-3923	-3928	-1850		
Mass Entropy (kJ/kg-C)	7.595	7.606	3.180		
Heat Capacity (kJ/kgmole-C)	59.17	59.05	1275		
Mass Heat Capacity (kJ/kg-C)	2.767	2.768	2.450		
LHV Molar Basis (Std) (Btu/SCF)	---	---	---		
LHV Mass Basis (Std) (kJ/kg)	---	---	---		
Phase Fraction [Vol. Basis]	0.9992	0.9992	8.248e-004		
Phase Fraction [Mass Basis]	0.9976	0.9976	2.370e-003		
Partial Pressure of CO2 (psig)	57.20	---	---		
Cost Based on Flow (Cost/s)	0.0000	0.0000	0.0000		
Act. Gas Flow (ACT_m3/h)	62.89	62.89	---		
Avg. Liq. Density (kgmole/m3)	16.84	16.85	1.988		
Specific Heat (kJ/kgmole-C)	59.17	59.05	1275		
Std. Gas Flow (STD_m3/h)	6337	6337	0.6171		
Std. Ideal Liq. Mass Density (kg/m3)	360.1	359.5	1034		
Act. Liq. Flow (barrel/day)	2.315	---	2.315		
Z Factor	---	0.9365	2.344		
Watson K	17.28	17.29	11.39		
User Property	---	---	---		
Partial Pressure of H2S (psig)	-14.69	---	---		
Cp/(Cp - R)	1.163	1.164	1.007		
Cp/Cv	1.348	1.349	1.099		
Heat of Vap. (kJ/kgmole)	1.606e+004	---	---		
Kinematic Viscosity (cSt)	---	0.2123	19.72		
Liq. Mass Density (Std. Cond) (kg/m3)	0.9081	0.9060	983.5		
Liq. Vol. Flow (Std. Cond) (barrel/day)	9.528e+005	9.528e+005	2.085		
Liquid Fraction	9.738e-005	0.0000	1.000		
Molar Volume (m3/kgmole)	0.2347	0.2347	0.5875		
Mass Heat of Vap. (kJ/kg)	751.0	---	---		
Phase Fraction [Molar Basis]	0.9999	0.9999	0.0001		
Surface Tension (dyne/cm)	8.567	---	8.567		
Thermal Conductivity (W/m-K)	---	5.953e-002	8.973e-002		
Viscosity (cP)	---	1.930e-002	17.47		
Cv (Semi-Ideal) (kJ/kgmole-C)	50.86	50.74	1266		
Mass Cv (Semi-Ideal) (kJ/kg-C)	2.378	2.378	2.434		
Cv (kJ/kgmole-C)	43.89	43.77	1160		
Mass Cv (kJ/kg-C)	2.052	2.051	2.230		
Cv (Ent. Method) (kJ/kgmole-C)	43.91	43.79	1194		
Mass Cv (Ent. Method) (kJ/kg-C)	2.053	2.052	2.295		
Cp/Cv (Ent. Method)	1.348	1.349	1.068		

Licensed to: PETROCHEMICAL ENGINEERIN

* Specified by user.

Material Stream: 1 (continued)

Fluid Package: Basis-1
Property Package: Peng-Robinson

PROPERTIES

	Overall	Vapour Phase	Liquid Phase		
Reid VP at 37.8 C (psig)	---	---	85.65		
True VP at 37.8 C (psig)	3607	---	1991		
Liq. Vol. Flow - Sum(Std. Cond) (barrel/day)	9.528e+005	9.528e+005	2.085		
HHV Molar Basis (Std) (Btu/SCF)	---	---	---		
HHV Mass Basis (Std) (kJ/kg)	---	---	---		
CO2 Loading	---	---	---		
CO2 App ML Con (kgmole/m3)	---	---	4.386e-002		
CO2 App WT Con (kgmol/kg)	---	---	4.951e-005		
Phase Fraction [Act. Vol. Basis]	0.9998	0.9998	2.438e-004		
Mass Exergy (kJ/kg)	595.2	---	---		
Viscosity Index	---	---	---		
Ideal Gas Cp/Cv	1.195	1.196	1.007		
Ideal Gas Cp (kJ/kgmole-C)	50.90	50.80	1127		
Mass Ideal Gas Cp (kJ/kg-C)	2.380	2.381	2.166		
Bubble Point Pressure (psig)	4369	---	---		

COMPOSITION

Overall Phase

Vapour Fraction 0.9999

COMPONENTS	MOLAR FLOW (kgmole/h)	MOLE FRACTION	MASS FLOW (tonne/d)	MASS FRACTION	LIQUID VOLUME FLOW (m3/h)	LIQUID VOLUME FRACTION
Methane	205.0219	0.7649	78.9395	0.5738	10.9860	0.6901
Ethane	27.6541	0.1032	19.9573	0.1451	2.3379	0.1469
Propane	13.5902	0.0507	14.3829	0.1046	1.1828	0.0743
i-Butane	1.5866	0.0059	2.2133	0.0161	0.1641	0.0103
n-Butane	2.8841	0.0108	4.0233	0.0292	0.2874	0.0181
i-Pentane	0.4635	0.0017	0.8025	0.0058	0.0536	0.0034
n-Pentane	0.4652	0.0017	0.8056	0.0059	0.0533	0.0033
n-Hexane	0.3694	0.0014	0.7639	0.0056	0.0480	0.0030
Nitrogen	5.5752	0.0208	3.7483	0.0272	0.1937	0.0122
CO2	9.1335	0.0341	9.6471	0.0701	0.4870	0.0306
H2S	0.0005	0.0000	0.0004	0.0000	0.0000	0.0000
H2O	0.3945	0.0015	0.1706	0.0012	0.0071	0.0004
NBP[1]95*	0.1425	0.0005	0.2323	0.0017	0.0142	0.0009
NBP[1]121*	0.1318	0.0005	0.2305	0.0017	0.0139	0.0009
NBP[1]147*	0.1254	0.0005	0.2414	0.0018	0.0144	0.0009
NBP[1]171*	0.1733	0.0006	0.3646	0.0027	0.0213	0.0013
NBP[1]195*	0.1579	0.0006	0.3546	0.0026	0.0205	0.0013
NBP[1]222*	0.0732	0.0003	0.1768	0.0013	0.0101	0.0006
NBP[1]248*	0.0375	0.0001	0.0974	0.0007	0.0055	0.0003
NBP[1]273*	0.0181	0.0001	0.0503	0.0004	0.0028	0.0002
NBP[1]299*	0.0083	0.0000	0.0245	0.0002	0.0014	0.0001
NBP[1]325*	0.0033	0.0000	0.0105	0.0001	0.0006	0.0000
NBP[1]351*	0.0015	0.0000	0.0050	0.0000	0.0003	0.0000
NBP[1]377*	0.0007	0.0000	0.0025	0.0000	0.0001	0.0000
NBP[1]402*	0.0003	0.0000	0.0013	0.0000	0.0001	0.0000
NBP[1]428*	0.0002	0.0000	0.0007	0.0000	0.0000	0.0000
NBP[1]454*	0.0001	0.0000	0.0003	0.0000	0.0000	0.0000
NBP[1]480*	0.0000	0.0000	0.0002	0.0000	0.0000	0.0000
NBP[1]505*	0.0000	0.0000	0.0001	0.0000	0.0000	0.0000
NBP[1]531*	0.0000	0.0000	0.0000	0.0000	0.0000	0.0000
NBP[1]557*	0.0000	0.0000	0.0000	0.0000	0.0000	0.0000
NBP[1]582*	0.0000	0.0000	0.0000	0.0000	0.0000	0.0000
NBP[1]608*	0.0000	0.0000	0.0000	0.0000	0.0000	0.0000
NBP[1]634*	0.0000	0.0000	0.0000	0.0000	0.0000	0.0000
NBP[1]659*	0.0000	0.0000	0.0000	0.0000	0.0000	0.0000
NBP[1]685*	0.0000	0.0000	0.0000	0.0000	0.0000	0.0000

* Specified by user.

Material Stream: 1 (continued)

Fluid Package: Basis-1
Property Package: Peng-Robinson

COMPOSITION

Overall Phase (continued)

Vapour Fraction 0.9999

COMPONENTS	MOLAR FLOW (kgmole/h)	MOLE FRACTION	MASS FLOW (tonne/d)	MASS FRACTION	LIQUID VOLUME FLOW (m3/h)	LIQUID VOLUME FRACTION
NBP[1]711*	0.0000	0.0000	0.0000	0.0000	0.0000	0.0000
NBP[1]736*	0.0000	0.0000	0.0000	0.0000	0.0000	0.0000
NBP[1]762*	0.0000	0.0000	0.0000	0.0000	0.0000	0.0000
NBP[1]788*	0.0000	0.0000	0.0000	0.0000	0.0000	0.0000
NBP[1]825*	0.0000	0.0000	0.0000	0.0000	0.0000	0.0000
NBP[1]873*	0.0000	0.0000	0.0000	0.0000	0.0000	0.0000
NBP[1]926*	0.0000	0.0000	0.0000	0.0000	0.0000	0.0000
NBP[1]978*	0.0000	0.0000	0.0000	0.0000	0.0000	0.0000
NBP[1]1021*	0.0000	0.0000	0.0000	0.0000	0.0000	0.0000
NBP[1]1075*	0.0000	0.0000	0.0000	0.0000	0.0000	0.0000
NBP[1]1123*	0.0000	0.0000	0.0000	0.0000	0.0000	0.0000
NBP[1]1173*	0.0000	0.0000	0.0000	0.0000	0.0000	0.0000
NBP[1]1250*	0.0000	0.0000	0.0000	0.0000	0.0000	0.0000
NBP[1]1339*	0.0000	0.0000	0.0000	0.0000	0.0000	0.0000
NBP[1]1432*	0.0000	0.0000	0.0000	0.0000	0.0000	0.0000
NBP[1]1528*	0.0000	0.0000	0.0000	0.0000	0.0000	0.0000
NBP[1]1637*	0.0000	0.0000	0.0000	0.0000	0.0000	0.0000
NBP[1]1732*	0.0000	0.0000	0.0000	0.0000	0.0000	0.0000
NBP[1]1819*	0.0001	0.0000	0.0029	0.0000	0.0001	0.0000
NBP[1]1913*	0.0112	0.0000	0.3148	0.0023	0.0121	0.0008
Total	268.0242	1.0000	137.5655	1.0000	15.9186	1.0000

Vapour Phase

Phase Fraction 0.9999

COMPONENTS	MOLAR FLOW (kgmole/h)	MOLE FRACTION	MASS FLOW (tonne/d)	MASS FRACTION	LIQUID VOLUME FLOW (m3/h)	LIQUID VOLUME FRACTION
Methane	205.0115	0.7650	78.9355	0.5752	10.9855	0.6907
Ethane	27.6523	0.1032	19.9561	0.1454	2.3378	0.1470
Propane	13.5892	0.0507	14.3819	0.1048	1.1827	0.0744
i-Butane	1.5865	0.0059	2.2131	0.0161	0.1641	0.0103
n-Butane	2.8838	0.0108	4.0229	0.0293	0.2874	0.0181
i-Pentane	0.4634	0.0017	0.8025	0.0058	0.0536	0.0034
n-Pentane	0.4652	0.0017	0.8055	0.0059	0.0533	0.0034
n-Hexane	0.3693	0.0014	0.7638	0.0056	0.0480	0.0030
Nitrogen	5.5749	0.0208	3.7481	0.0273	0.1937	0.0122
CO2	9.1329	0.0341	9.6464	0.0703	0.4870	0.0306
H2S	0.0005	0.0000	0.0004	0.0000	0.0000	0.0000
H2O	0.3944	0.0015	0.1705	0.0012	0.0071	0.0004
NBP[1]95*	0.1425	0.0005	0.2323	0.0017	0.0142	0.0009
NBP[1]121*	0.1318	0.0005	0.2305	0.0017	0.0139	0.0009
NBP[1]147*	0.1254	0.0005	0.2413	0.0018	0.0144	0.0009
NBP[1]171*	0.1732	0.0006	0.3645	0.0027	0.0213	0.0013
NBP[1]195*	0.1579	0.0006	0.3545	0.0026	0.0205	0.0013
NBP[1]222*	0.0732	0.0003	0.1768	0.0013	0.0101	0.0006
NBP[1]248*	0.0375	0.0001	0.0974	0.0007	0.0055	0.0003
NBP[1]273*	0.0181	0.0001	0.0503	0.0004	0.0028	0.0002
NBP[1]299*	0.0083	0.0000	0.0245	0.0002	0.0014	0.0001
NBP[1]325*	0.0033	0.0000	0.0105	0.0001	0.0006	0.0000
NBP[1]351*	0.0015	0.0000	0.0050	0.0000	0.0003	0.0000
NBP[1]377*	0.0007	0.0000	0.0025	0.0000	0.0001	0.0000
NBP[1]402*	0.0003	0.0000	0.0013	0.0000	0.0001	0.0000
NBP[1]428*	0.0002	0.0000	0.0007	0.0000	0.0000	0.0000
NBP[1]454*	0.0001	0.0000	0.0003	0.0000	0.0000	0.0000
NBP[1]480*	0.0000	0.0000	0.0002	0.0000	0.0000	0.0000
NBP[1]505*	0.0000	0.0000	0.0001	0.0000	0.0000	0.0000

* Specified by user.

Material Stream: 1 (continued)

Fluid Package: Basis-1
Property Package: Peng-Robinson

COMPOSITION

Vapour Phase (continued)

Phase Fraction 0.9999

COMPONENTS	MOLAR FLOW (kgmole/h)	MOLE FRACTION	MASS FLOW (tonne/d)	MASS FRACTION	LIQUID VOLUME FLOW (m3/h)	LIQUID VOLUME FRACTION
NBP[1]531*	0.0000	0.0000	0.0000	0.0000	0.0000	0.0000
NBP[1]557*	0.0000	0.0000	0.0000	0.0000	0.0000	0.0000
NBP[1]582*	0.0000	0.0000	0.0000	0.0000	0.0000	0.0000
NBP[1]608*	0.0000	0.0000	0.0000	0.0000	0.0000	0.0000
NBP[1]634*	0.0000	0.0000	0.0000	0.0000	0.0000	0.0000
NBP[1]659*	0.0000	0.0000	0.0000	0.0000	0.0000	0.0000
NBP[1]685*	0.0000	0.0000	0.0000	0.0000	0.0000	0.0000
NBP[1]711*	0.0000	0.0000	0.0000	0.0000	0.0000	0.0000
NBP[1]736*	0.0000	0.0000	0.0000	0.0000	0.0000	0.0000
NBP[1]762*	0.0000	0.0000	0.0000	0.0000	0.0000	0.0000
NBP[1]788*	0.0000	0.0000	0.0000	0.0000	0.0000	0.0000
NBP[1]825*	0.0000	0.0000	0.0000	0.0000	0.0000	0.0000
NBP[1]873*	0.0000	0.0000	0.0000	0.0000	0.0000	0.0000
NBP[1]926*	0.0000	0.0000	0.0000	0.0000	0.0000	0.0000
NBP[1]978*	0.0000	0.0000	0.0000	0.0000	0.0000	0.0000
NBP[1]1021*	0.0000	0.0000	0.0000	0.0000	0.0000	0.0000
NBP[1]1075*	0.0000	0.0000	0.0000	0.0000	0.0000	0.0000
NBP[1]1123*	0.0000	0.0000	0.0000	0.0000	0.0000	0.0000
NBP[1]1173*	0.0000	0.0000	0.0000	0.0000	0.0000	0.0000
NBP[1]1250*	0.0000	0.0000	0.0000	0.0000	0.0000	0.0000
NBP[1]1339*	0.0000	0.0000	0.0000	0.0000	0.0000	0.0000
NBP[1]1432*	0.0000	0.0000	0.0000	0.0000	0.0000	0.0000
NBP[1]1528*	0.0000	0.0000	0.0000	0.0000	0.0000	0.0000
NBP[1]1637*	0.0000	0.0000	0.0000	0.0000	0.0000	0.0000
NBP[1]1732*	0.0000	0.0000	0.0000	0.0000	0.0000	0.0000
NBP[1]1819*	0.0000	0.0000	0.0000	0.0000	0.0000	0.0000
NBP[1]1913*	0.0000	0.0000	0.0000	0.0000	0.0000	0.0000
Total	267.9981	1.0000	137.2395	1.0000	15.9054	1.0000

Liquid Phase

Phase Fraction 9.738e-005

COMPONENTS	MOLAR FLOW (kgmole/h)	MOLE FRACTION	MASS FLOW (tonne/d)	MASS FRACTION	LIQUID VOLUME FLOW (m3/h)	LIQUID VOLUME FRACTION
Methane	0.0104	0.3997	0.0040	0.0123	0.0006	0.0426
Ethane	0.0017	0.0659	0.0012	0.0038	0.0001	0.0111
Propane	0.0010	0.0387	0.0011	0.0033	0.0001	0.0067
i-Butane	0.0001	0.0053	0.0002	0.0006	0.0000	0.0011
n-Butane	0.0003	0.0100	0.0004	0.0011	0.0000	0.0020
i-Pentane	0.0000	0.0019	0.0001	0.0003	0.0000	0.0004
n-Pentane	0.0001	0.0020	0.0001	0.0003	0.0000	0.0004
n-Hexane	0.0000	0.0019	0.0001	0.0003	0.0000	0.0005
Nitrogen	0.0003	0.0108	0.0002	0.0006	0.0000	0.0007
CO2	0.0007	0.0258	0.0007	0.0022	0.0000	0.0027
H2S	0.0000	0.0000	0.0000	0.0000	0.0000	0.0000
H2O	0.0000	0.0011	0.0000	0.0000	0.0000	0.0000
NBP[1]95*	0.0000	0.0006	0.0000	0.0001	0.0000	0.0001
NBP[1]121*	0.0000	0.0006	0.0000	0.0001	0.0000	0.0001
NBP[1]147*	0.0000	0.0006	0.0000	0.0001	0.0000	0.0001
NBP[1]171*	0.0000	0.0009	0.0001	0.0002	0.0000	0.0002
NBP[1]195*	0.0000	0.0009	0.0001	0.0002	0.0000	0.0002
NBP[1]222*	0.0000	0.0005	0.0000	0.0001	0.0000	0.0001
NBP[1]248*	0.0000	0.0003	0.0000	0.0001	0.0000	0.0001
NBP[1]273*	0.0000	0.0001	0.0000	0.0000	0.0000	0.0000
NBP[1]299*	0.0000	0.0001	0.0000	0.0000	0.0000	0.0000
NBP[1]325*	0.0000	0.0000	0.0000	0.0000	0.0000	0.0000

* Specified by user.

Material Stream: 1 (continued)

Fluid Package: Basis-1
Property Package: Peng-Robinson

COMPOSITION

Liquid Phase (continued)

Phase Fraction 9.738e-005

COMPONENTS	MOLAR FLOW (kgmole/h)	MOLE FRACTION	MASS FLOW (tonne/d)	MASS FRACTION	LIQUID VOLUME FLOW (m3/h)	LIQUID VOLUME FRACTION
NBP[1]351*	0.0000	0.0000	0.0000	0.0000	0.0000	0.0000
NBP[1]377*	0.0000	0.0000	0.0000	0.0000	0.0000	0.0000
NBP[1]402*	0.0000	0.0000	0.0000	0.0000	0.0000	0.0000
NBP[1]428*	0.0000	0.0000	0.0000	0.0000	0.0000	0.0000
NBP[1]454*	0.0000	0.0000	0.0000	0.0000	0.0000	0.0000
NBP[1]480*	0.0000	0.0000	0.0000	0.0000	0.0000	0.0000
NBP[1]505*	0.0000	0.0000	0.0000	0.0000	0.0000	0.0000
NBP[1]531*	0.0000	0.0000	0.0000	0.0000	0.0000	0.0000
NBP[1]557*	0.0000	0.0000	0.0000	0.0000	0.0000	0.0000
NBP[1]582*	0.0000	0.0000	0.0000	0.0000	0.0000	0.0000
NBP[1]608*	0.0000	0.0000	0.0000	0.0000	0.0000	0.0000
NBP[1]634*	0.0000	0.0000	0.0000	0.0000	0.0000	0.0000
NBP[1]659*	0.0000	0.0000	0.0000	0.0000	0.0000	0.0000
NBP[1]685*	0.0000	0.0000	0.0000	0.0000	0.0000	0.0000
NBP[1]711*	0.0000	0.0000	0.0000	0.0000	0.0000	0.0000
NBP[1]736*	0.0000	0.0000	0.0000	0.0000	0.0000	0.0000
NBP[1]762*	0.0000	0.0000	0.0000	0.0000	0.0000	0.0000
NBP[1]788*	0.0000	0.0000	0.0000	0.0000	0.0000	0.0000
NBP[1]825*	0.0000	0.0000	0.0000	0.0000	0.0000	0.0000
NBP[1]873*	0.0000	0.0000	0.0000	0.0000	0.0000	0.0000
NBP[1]926*	0.0000	0.0000	0.0000	0.0000	0.0000	0.0000
NBP[1]978*	0.0000	0.0000	0.0000	0.0000	0.0000	0.0000
NBP[1]1021*	0.0000	0.0000	0.0000	0.0000	0.0000	0.0000
NBP[1]1075*	0.0000	0.0000	0.0000	0.0000	0.0000	0.0000
NBP[1]1123*	0.0000	0.0000	0.0000	0.0000	0.0000	0.0000
NBP[1]1173*	0.0000	0.0000	0.0000	0.0000	0.0000	0.0000
NBP[1]1250*	0.0000	0.0000	0.0000	0.0000	0.0000	0.0000
NBP[1]1339*	0.0000	0.0000	0.0000	0.0000	0.0000	0.0000
NBP[1]1432*	0.0000	0.0000	0.0000	0.0000	0.0000	0.0000
NBP[1]1528*	0.0000	0.0000	0.0000	0.0000	0.0000	0.0000
NBP[1]1637*	0.0000	0.0000	0.0000	0.0000	0.0000	0.0000
NBP[1]1732*	0.0000	0.0000	0.0000	0.0000	0.0000	0.0000
NBP[1]1819*	0.0001	0.0041	0.0029	0.0088	0.0001	0.0085
NBP[1]1913*	0.0112	0.4282	0.3148	0.9656	0.0121	0.9220
Total	0.0261	1.0000	0.3260	1.0000	0.0131	1.0000

Material Stream: 2

Fluid Package: Basis-1
Property Package: Peng-Robinson

CONDITIONS

		Overall	Liquid Phase	Liquid Phase		
Vapour / Phase Fraction		0.0000	0.0170	0.9830		
Temperature:	(F)	95.88	95.88	95.88		
Pressure:	(psig)	2090 *	2090	2090		
Molar Flow	(MMSCFD)	0.3574	6.079e-003	0.3513		
Mass Flow	(tonne/d)	53.98	3.654	50.33		
Std Ideal Liq Vol Flow	(barrel/day)	449.3	23.56	425.8		
Molar Enthalpy	(kJ/kgmole)	-2.850e+005	-1.060e+006	-2.716e+005		
Molar Entropy	(kJ/kgmole-C)	220.4	1098	205.3		
Heat Flow	(MMBtu/hr)	-4.808	-0.3044	-4.504		
Liq Vol Flow @Std Cond	(barrel/day)	434.3 *	23.73	410.6		

* Specified by user.

Material Stream: 2 (continued)

Fluid Package: Basis-1
Property Package: Peng-Robinson

PROPERTIES

	Overall	Liquid Phase	Liquid Phase		
Molecular Weight	126.4	502.8	119.8		
Molar Density (kgmole/m3)	6.147	1.922	6.390		
Mass Density (kg/m3)	776.7	966.5	765.7		
Act. Volume Flow (barrel/day)	437.2	23.78	413.4		
Mass Enthalpy (kJ/kg)	-2255	-2109	-2266		
Mass Entropy (kJ/kg-C)	1.745	2.183	1.713		
Heat Capacity (kJ/kgmole-C)	255.7	961.1	243.5		
Mass Heat Capacity (kJ/kg-C)	2.024	1.911	2.032		
LHV Molar Basis (Std) (Btu/SCF)	---	---	---		
LHV Mass Basis (Std) (kJ/kg)	---	---	---		
Phase Fraction [Vol. Basis]	0.0000	5.243e-002	0.9476		
Phase Fraction [Mass Basis]	0.0000	6.769e-002	0.9323		
Partial Pressure of CO2 (psig)	-14.70	---	---		
Cost Based on Flow (Cost/s)	0.0000	0.0000	0.0000		
Act. Gas Flow (ACT_m3/h)	---	---	---		
Avg. Liq. Density (kgmole/m3)	5.980	1.940	6.204		
Specific Heat (kJ/kgmole-C)	255.7	961.1	243.5		
Std. Gas Flow (STD_m3/h)	420.9	7.159	413.7		
Std. Ideal Liq. Mass Density (kg/m3)	755.6	975.6	743.5		
Act. Liq. Flow (barrel/day)	437.2	23.78	413.4		
Z Factor	---	2.942	0.8850		
Watson K	11.99	11.67	12.06		
User Property	---	---	---		
Partial Pressure of H2S (psig)	-14.70	---	---		
Cp/(Cp - R)	1.034	1.009	1.035		
Cp/Cv	1.202	1.103	1.210		
Heat of Vap. (kJ/kgmole)	---	---	---		
Kinematic Viscosity (cSt)	1.244	537.4	1.048		
Liq. Mass Density (Std. Cond) (kg/m3)	781.8	968.5	771.0		
Liq. Vol. Flow (Std. Cond) (barrel/day)	434.3	23.73	410.6		
Liquid Fraction	1.000	1.000	1.000		
Molar Volume (m3/kgmole)	0.1627	0.5203	0.1565		
Mass Heat of Vap. (kJ/kg)	---	---	---		
Phase Fraction [Molar Basis]	0.0000	0.0170	0.9830		
Surface Tension (dyne/cm)	---	20.30	15.38		
Thermal Conductivity (W/m-K)	9.974e-002	0.1174	9.881e-002		
Viscosity (cP)	1.244	519.4	0.8029		
Cv (Semi-Ideal) (kJ/kgmole-C)	247.4	952.7	---		
Mass Cv (Semi-Ideal) (kJ/kg-C)	1.958	1.895	---		
Cv (kJ/kgmole-C)	212.7	871.2	---		
Mass Cv (kJ/kg-C)	1.683	1.733	---		
Cv (Ent. Method) (kJ/kgmole-C)	---	---	---		
Mass Cv (Ent. Method) (kJ/kg-C)	---	---	---		
Cp/Cv (Ent. Method)	---	---	---		
Reid VP at 37.8 C (psig)	97.87	26.74	100.9		
True VP at 37.8 C (psig)	475.9	449.8	497.6		
Liq. Vol. Flow - Sum(Std. Cond) (barrel/day)	23.73	23.73	0.0000		
HHV Molar Basis (Std) (Btu/SCF)	---	---	---		
HHV Mass Basis (Std) (kJ/kg)	---	---	---		
CO2 Loading	---	---	---		
CO2 App ML Con (kgmole/m3)	8.263e-002	2.756e-002	8.580e-002		
CO2 App WT Con (kgmol/kg)	1.064e-004	2.851e-005	1.120e-004		
Phase Fraction [Act. Vol. Basis]	0.0000	5.440e-002	0.9456		
Mass Exergy (kJ/kg)	35.50	---	---		
Viscosity Index	32.55	---	---		
Ideal Gas Cp/Cv	1.043	1.010	1.045		
Ideal Gas Cp (kJ/kgmole-C)	203.6	802.7	193.3		

* Specified by user.

Material Stream: 2 (continued)

Fluid Package: Basis-1
Property Package: Peng-Robinson

PROPERTIES

		Overall	Liquid Phase	Liquid Phase		
Mass Ideal Gas Cp	(kJ/kg-C)	1.612	1.596	1.613		
Bubble Point Pressure	(psig)	467.5	---	---		

COMPOSITION

Overall Phase

Vapour Fraction 0.0000

COMPONENTS	MOLAR FLOW (kgmole/h)	MOLE FRACTION	MASS FLOW (tonne/d)	MASS FRACTION	LIQUID VOLUME FLOW (m3/h)	LIQUID VOLUME FRACTION
Methane	2.0221	0.1136	0.7786	0.0144	0.1084	0.0364
Ethane	1.1465	0.0644	0.8274	0.0153	0.0969	0.0326
Propane	1.6775	0.0942	1.7753	0.0329	0.1460	0.0490
i-Butane	0.4420	0.0248	0.6166	0.0114	0.0457	0.0154
n-Butane	1.0672	0.0600	1.4887	0.0276	0.1064	0.0357
i-Pentane	0.3860	0.0217	0.6684	0.0124	0.0447	0.0150
n-Pentane	0.4950	0.0278	0.8571	0.0159	0.0567	0.0191
n-Hexane	1.1004	0.0618	2.2760	0.0422	0.1431	0.0481
Nitrogen	0.0228	0.0013	0.0153	0.0003	0.0008	0.0003
CO2	0.2393	0.0134	0.2527	0.0047	0.0128	0.0043
H2S	0.0000	0.0000	0.0000	0.0000	0.0000	0.0000
H2O	0.0107	0.0006	0.0046	0.0001	0.0002	0.0001
NBP[1]95*	0.1457	0.0082	0.2376	0.0044	0.0146	0.0049
NBP[1]121*	0.2063	0.0116	0.3606	0.0067	0.0218	0.0073
NBP[1]147*	0.3061	0.0172	0.5891	0.0109	0.0350	0.0118
NBP[1]171*	0.6492	0.0365	1.3660	0.0253	0.0800	0.0269
NBP[1]195*	0.9179	0.0516	2.0614	0.0382	0.1193	0.0401
NBP[1]222*	0.7271	0.0408	1.7563	0.0325	0.1004	0.0337
NBP[1]248*	0.6282	0.0353	1.6313	0.0302	0.0921	0.0309
NBP[1]273*	0.5177	0.0291	1.4378	0.0266	0.0803	0.0270
NBP[1]299*	0.4103	0.0230	1.2148	0.0225	0.0671	0.0225
NBP[1]325*	0.2995	0.0168	0.9422	0.0175	0.0515	0.0173
NBP[1]351*	0.2442	0.0137	0.8165	0.0151	0.0442	0.0148
NBP[1]377*	0.2240	0.0126	0.7989	0.0148	0.0428	0.0144
NBP[1]402*	0.2058	0.0116	0.7826	0.0145	0.0415	0.0139
NBP[1]428*	0.1959	0.0110	0.7949	0.0147	0.0417	0.0140
NBP[1]454*	0.1955	0.0110	0.8477	0.0157	0.0441	0.0148
NBP[1]480*	0.1981	0.0111	0.9180	0.0170	0.0473	0.0159
NBP[1]505*	0.1920	0.0108	0.9483	0.0176	0.0484	0.0162
NBP[1]531*	0.1852	0.0104	0.9740	0.0180	0.0492	0.0165
NBP[1]557*	0.1784	0.0100	0.9978	0.0185	0.0500	0.0168
NBP[1]582*	0.1706	0.0096	1.0132	0.0188	0.0503	0.0169
NBP[1]608*	0.1643	0.0092	1.0351	0.0192	0.0510	0.0171
NBP[1]634*	0.1611	0.0090	1.0753	0.0199	0.0526	0.0177
NBP[1]659*	0.1586	0.0089	1.1194	0.0207	0.0543	0.0182
NBP[1]685*	0.1641	0.0092	1.2227	0.0227	0.0588	0.0198
NBP[1]711*	0.1715	0.0096	1.3445	0.0249	0.0642	0.0216
NBP[1]736*	0.1697	0.0095	1.3915	0.0258	0.0659	0.0221
NBP[1]762*	0.1653	0.0093	1.4214	0.0263	0.0669	0.0225
NBP[1]788*	0.1585	0.0089	1.4424	0.0267	0.0674	0.0226
NBP[1]825*	0.2655	0.0149	2.5963	0.0481	0.1201	0.0404
NBP[1]873*	0.1830	0.0103	1.9404	0.0359	0.0887	0.0298
NBP[1]926*	0.1437	0.0081	1.6472	0.0305	0.0744	0.0250
NBP[1]978*	0.1474	0.0083	1.8524	0.0343	0.0825	0.0277
NBP[1]1021*	0.0728	0.0041	0.9655	0.0179	0.0426	0.0143
NBP[1]1075*	0.0449	0.0025	0.6310	0.0117	0.0276	0.0093
NBP[1]1123*	0.0417	0.0023	0.6267	0.0116	0.0271	0.0091
NBP[1]1173*	0.0300	0.0017	0.4772	0.0088	0.0205	0.0069
NBP[1]1250*	0.0393	0.0022	0.6767	0.0125	0.0287	0.0096

* Specified by user.

Material Stream: 2 (continued)

Fluid Package: Basis-1
Property Package: Peng-Robinson

COMPOSITION

Overall Phase (continued)

Vapour Fraction 0.0000

COMPONENTS	MOLAR FLOW (kgmole/h)	MOLE FRACTION	MASS FLOW (tonne/d)	MASS FRACTION	LIQUID VOLUME FLOW (m3/h)	LIQUID VOLUME FRACTION
NBP[1]1339*	0.0364	0.0020	0.6999	0.0130	0.0291	0.0098
NBP[1]1432*	0.0257	0.0014	0.5397	0.0100	0.0221	0.0074
NBP[1]1528*	0.0180	0.0010	0.4082	0.0076	0.0165	0.0055
NBP[1]1637*	0.0127	0.0007	0.3047	0.0056	0.0122	0.0041
NBP[1]1732*	0.0101	0.0006	0.2565	0.0048	0.0101	0.0034
NBP[1]1819*	0.0096	0.0005	0.2561	0.0047	0.0100	0.0034
NBP[1]1913*	0.0000	0.0000	0.0000	0.0000	0.0000	0.0000
Total	17.8012	1.0000	53.9808	1.0000	2.9766	1.0000

Liquid Phase

Phase Fraction 1.701e-002

COMPONENTS	MOLAR FLOW (kgmole/h)	MOLE FRACTION	MASS FLOW (tonne/d)	MASS FRACTION	LIQUID VOLUME FLOW (m3/h)	LIQUID VOLUME FRACTION
Methane	0.0348	0.1150	0.0134	0.0037	0.0019	0.0120
Ethane	0.0134	0.0442	0.0097	0.0026	0.0011	0.0073
Propane	0.0157	0.0517	0.0166	0.0045	0.0014	0.0087
i-Butane	0.0037	0.0124	0.0052	0.0014	0.0004	0.0025
n-Butane	0.0082	0.0271	0.0114	0.0031	0.0008	0.0052
i-Pentane	0.0027	0.0090	0.0047	0.0013	0.0003	0.0020
n-Pentane	0.0033	0.0108	0.0057	0.0015	0.0004	0.0024
n-Hexane	0.0064	0.0212	0.0133	0.0036	0.0008	0.0054
Nitrogen	0.0006	0.0021	0.0004	0.0001	0.0000	0.0001
CO2	0.0043	0.0143	0.0046	0.0013	0.0002	0.0015
H2S	0.0000	0.0000	0.0000	0.0000	0.0000	0.0000
H2O	0.0002	0.0006	0.0001	0.0000	0.0000	0.0000
NBP[1]95*	0.0009	0.0031	0.0015	0.0004	0.0001	0.0006
NBP[1]121*	0.0012	0.0041	0.0022	0.0006	0.0001	0.0008
NBP[1]147*	0.0017	0.0057	0.0033	0.0009	0.0002	0.0013
NBP[1]171*	0.0034	0.0113	0.0072	0.0020	0.0004	0.0027
NBP[1]195*	0.0046	0.0151	0.0103	0.0028	0.0006	0.0038
NBP[1]222*	0.0034	0.0114	0.0083	0.0023	0.0005	0.0030
NBP[1]248*	0.0028	0.0094	0.0074	0.0020	0.0004	0.0027
NBP[1]273*	0.0022	0.0074	0.0062	0.0017	0.0003	0.0022
NBP[1]299*	0.0017	0.0056	0.0050	0.0014	0.0003	0.0018
NBP[1]325*	0.0012	0.0040	0.0038	0.0010	0.0002	0.0013
NBP[1]351*	0.0009	0.0031	0.0032	0.0009	0.0002	0.0011
NBP[1]377*	0.0008	0.0028	0.0030	0.0008	0.0002	0.0010
NBP[1]402*	0.0007	0.0025	0.0028	0.0008	0.0002	0.0010
NBP[1]428*	0.0007	0.0023	0.0028	0.0008	0.0001	0.0009
NBP[1]454*	0.0007	0.0022	0.0029	0.0008	0.0002	0.0010
NBP[1]480*	0.0007	0.0022	0.0031	0.0008	0.0002	0.0010
NBP[1]505*	0.0006	0.0021	0.0031	0.0009	0.0002	0.0010
NBP[1]531*	0.0006	0.0020	0.0032	0.0009	0.0002	0.0010
NBP[1]557*	0.0006	0.0019	0.0032	0.0009	0.0002	0.0010
NBP[1]582*	0.0006	0.0018	0.0033	0.0009	0.0002	0.0010
NBP[1]608*	0.0005	0.0018	0.0034	0.0009	0.0002	0.0011
NBP[1]634*	0.0005	0.0018	0.0036	0.0010	0.0002	0.0011
NBP[1]659*	0.0005	0.0018	0.0038	0.0010	0.0002	0.0012
NBP[1]685*	0.0006	0.0019	0.0043	0.0012	0.0002	0.0013
NBP[1]711*	0.0006	0.0020	0.0049	0.0013	0.0002	0.0015
NBP[1]736*	0.0006	0.0021	0.0053	0.0015	0.0003	0.0016
NBP[1]762*	0.0007	0.0022	0.0058	0.0016	0.0003	0.0018
NBP[1]788*	0.0007	0.0023	0.0065	0.0018	0.0003	0.0019
NBP[1]825*	0.0014	0.0046	0.0137	0.0037	0.0006	0.0041
NBP[1]873*	0.0013	0.0043	0.0137	0.0037	0.0006	0.0040

* Specified by user.

Material Stream: 2 (continued)

Fluid Package: Basis-1
Property Package: Peng-Robinson

COMPOSITION

Liquid Phase (continued)

Phase Fraction 1.701e-002

COMPONENTS	MOLAR FLOW (kgmole/h)	MOLE FRACTION	MASS FLOW (tonne/d)	MASS FRACTION	LIQUID VOLUME FLOW (m3/h)	LIQUID VOLUME FRACTION
NBP[1]926*	0.0015	0.0051	0.0177	0.0048	0.0008	0.0051
NBP[1]978*	0.0024	0.0080	0.0303	0.0083	0.0014	0.0087
NBP[1]1021*	0.0021	0.0068	0.0273	0.0075	0.0012	0.0077
NBP[1]1075*	0.0030	0.0098	0.0418	0.0114	0.0018	0.0117
NBP[1]1123*	0.0060	0.0198	0.0902	0.0247	0.0039	0.0250
NBP[1]1173*	0.0108	0.0355	0.1711	0.0468	0.0073	0.0470
NBP[1]1250*	0.0337	0.1112	0.5795	0.1586	0.0246	0.1574
NBP[1]1339*	0.0361	0.1194	0.6954	0.1903	0.0290	0.1855
NBP[1]1432*	0.0257	0.0848	0.5397	0.1477	0.0221	0.1418
NBP[1]1528*	0.0180	0.0595	0.4082	0.1117	0.0165	0.1059
NBP[1]1637*	0.0127	0.0418	0.3047	0.0834	0.0122	0.0780
NBP[1]1732*	0.0101	0.0334	0.2565	0.0702	0.0101	0.0650
NBP[1]1819*	0.0096	0.0318	0.2561	0.0701	0.0100	0.0641
NBP[1]1913*	0.0000	0.0000	0.0000	0.0000	0.0000	0.0000
Total	0.3028	1.0000	3.6542	1.0000	0.1561	1.0000

Liquid Phase

Phase Fraction 0.9830

COMPONENTS	MOLAR FLOW (kgmole/h)	MOLE FRACTION	MASS FLOW (tonne/d)	MASS FRACTION	LIQUID VOLUME FLOW (m3/h)	LIQUID VOLUME FRACTION
Methane	1.9873	0.1136	0.7652	0.0152	0.1065	0.0378
Ethane	1.1332	0.0648	0.8178	0.0162	0.0958	0.0340
Propane	1.6618	0.0950	1.7588	0.0349	0.1446	0.0513
i-Butane	0.4383	0.0250	0.6114	0.0121	0.0453	0.0161
n-Butane	1.0590	0.0605	1.4773	0.0294	0.1055	0.0374
i-Pentane	0.3833	0.0219	0.6637	0.0132	0.0444	0.0157
n-Pentane	0.4917	0.0281	0.8515	0.0169	0.0563	0.0200
n-Hexane	1.0940	0.0625	2.2627	0.0450	0.1423	0.0504
Nitrogen	0.0222	0.0013	0.0149	0.0003	0.0008	0.0003
CO2	0.2349	0.0134	0.2482	0.0049	0.0125	0.0044
H2S	0.0000	0.0000	0.0000	0.0000	0.0000	0.0000
H2O	0.0105	0.0006	0.0045	0.0001	0.0002	0.0001
NBP[1]95*	0.1448	0.0083	0.2360	0.0047	0.0145	0.0051
NBP[1]121*	0.2050	0.0117	0.3585	0.0071	0.0217	0.0077
NBP[1]147*	0.3043	0.0174	0.5858	0.0116	0.0348	0.0123
NBP[1]171*	0.6458	0.0369	1.3588	0.0270	0.0795	0.0282
NBP[1]195*	0.9133	0.0522	2.0511	0.0408	0.1187	0.0421
NBP[1]222*	0.7237	0.0414	1.7480	0.0347	0.0999	0.0354
NBP[1]248*	0.6253	0.0357	1.6240	0.0323	0.0917	0.0325
NBP[1]273*	0.5155	0.0295	1.4316	0.0284	0.0799	0.0283
NBP[1]299*	0.4085	0.0233	1.2098	0.0240	0.0668	0.0237
NBP[1]325*	0.2983	0.0170	0.9385	0.0186	0.0513	0.0182
NBP[1]351*	0.2432	0.0139	0.8133	0.0162	0.0440	0.0156
NBP[1]377*	0.2232	0.0128	0.7959	0.0158	0.0426	0.0151
NBP[1]402*	0.2050	0.0117	0.7797	0.0155	0.0414	0.0147
NBP[1]428*	0.1952	0.0112	0.7921	0.0157	0.0416	0.0147
NBP[1]454*	0.1948	0.0111	0.8447	0.0168	0.0439	0.0156
NBP[1]480*	0.1975	0.0113	0.9149	0.0182	0.0471	0.0167
NBP[1]505*	0.1913	0.0109	0.9451	0.0188	0.0482	0.0171
NBP[1]531*	0.1846	0.0106	0.9708	0.0193	0.0491	0.0174
NBP[1]557*	0.1778	0.0102	0.9946	0.0198	0.0498	0.0177
NBP[1]582*	0.1700	0.0097	1.0099	0.0201	0.0502	0.0178
NBP[1]608*	0.1637	0.0094	1.0317	0.0205	0.0508	0.0180
NBP[1]634*	0.1606	0.0092	1.0718	0.0213	0.0524	0.0186
NBP[1]659*	0.1581	0.0090	1.1156	0.0222	0.0541	0.0192

* Specified by user.

Material Stream: 2 (continued)

Fluid Package: Basis-1
Property Package: Peng-Robinson

COMPOSITION

Liquid Phase (continued)

Phase Fraction 0.9830

COMPONENTS	MOLAR FLOW (kgmole/h)	MOLE FRACTION	MASS FLOW (tonne/d)	MASS FRACTION	LIQUID VOLUME FLOW (m3/h)	LIQUID VOLUME FRACTION
NBP[1]685*	0.1635	0.0093	1.2185	0.0242	0.0586	0.0208
NBP[1]711*	0.1709	0.0098	1.3396	0.0266	0.0639	0.0227
NBP[1]736*	0.1691	0.0097	1.3862	0.0275	0.0657	0.0233
NBP[1]762*	0.1646	0.0094	1.4156	0.0281	0.0666	0.0236
NBP[1]788*	0.1578	0.0090	1.4359	0.0285	0.0671	0.0238
NBP[1]825*	0.2641	0.0151	2.5826	0.0513	0.1195	0.0424
NBP[1]873*	0.1817	0.0104	1.9267	0.0383	0.0881	0.0312
NBP[1]926*	0.1422	0.0081	1.6295	0.0324	0.0736	0.0261
NBP[1]978*	0.1449	0.0083	1.8221	0.0362	0.0811	0.0288
NBP[1]1021*	0.0708	0.0040	0.9382	0.0186	0.0414	0.0147
NBP[1]1075*	0.0419	0.0024	0.5892	0.0117	0.0258	0.0091
NBP[1]1123*	0.0357	0.0020	0.5365	0.0107	0.0232	0.0082
NBP[1]1173*	0.0192	0.0011	0.3061	0.0061	0.0131	0.0047
NBP[1]1250*	0.0056	0.0003	0.0972	0.0019	0.0041	0.0015
NBP[1]1339*	0.0002	0.0000	0.0045	0.0001	0.0002	0.0001
NBP[1]1432*	0.0000	0.0000	0.0000	0.0000	0.0000	0.0000
NBP[1]1528*	0.0000	0.0000	0.0000	0.0000	0.0000	0.0000
NBP[1]1637*	0.0000	0.0000	0.0000	0.0000	0.0000	0.0000
NBP[1]1732*	0.0000	0.0000	0.0000	0.0000	0.0000	0.0000
NBP[1]1819*	0.0000	0.0000	0.0000	0.0000	0.0000	0.0000
NBP[1]1913*	0.0000	0.0000	0.0000	0.0000	0.0000	0.0000
Total	17.4984	1.0000	50.3266	1.0000	2.8205	1.0000

Material Stream: 3

Fluid Package: Basis-1
Property Package: Peng-Robinson

CONDITIONS

		Overall	Aqueous Phase
Vapour / Phase Fraction		0.0000	1.0000
Temperature:	(F)	86.60	86.60
Pressure:	(psig)	2090 *	2090
Molar Flow	(MMSCFD)	2.135	2.135
Mass Flow	(tonne/d)	46.00	46.00
Std Ideal Liq Vol Flow	(barrel/day)	290.0	290.0
Molar Enthalpy	(kJ/kgmole)	-2.856e+005	-2.856e+005
Molar Entropy	(kJ/kgmole-C)	54.92	54.92
Heat Flow	(MMBtu/hr)	-28.79	-28.79
Liq Vol Flow @Std Cond	(barrel/day)	285.1 *	285.1

PROPERTIES

		Overall	Aqueous Phase
Molecular Weight		18.03	18.03
Molar Density	(kgmole/m3)	55.91	55.91
Mass Density	(kg/m3)	1008	1008
Act. Volume Flow	(barrel/day)	287.1	287.1
Mass Enthalpy	(kJ/kg)	-1.584e+004	-1.584e+004
Mass Entropy	(kJ/kg-C)	3.047	3.047
Heat Capacity	(kJ/kgmole-C)	77.42	77.42
Mass Heat Capacity	(kJ/kg-C)	4.295	4.295
LHV Molar Basis (Std)	(Btu/SCF)	1.809e-004	1.809e-004
LHV Mass Basis (Std)	(kJ/kg)	8.858e-003	8.858e-003
Phase Fraction [Vol. Basis]		0.0000	1.000
Phase Fraction [Mass Basis]		0.0000	1.000
Partial Pressure of CO2	(psig)	-14.70	---

* Specified by user.

Material Stream: 3 (continued)

Fluid Package: Basis-1
Property Package: Peng-Robinson

PROPERTIES

	Overall	Aqueous Phase			
Cost Based on Flow (Cost/s)	0.0000	0.0000			
Act. Gas Flow (ACT_m3/h)	---	---			
Avg. Liq. Density (kgmole/m3)	55.35	55.35			
Specific Heat (kJ/kgmole-C)	77.42	77.42			
Std. Gas Flow (STD_m3/h)	2514	2514			
Std. Ideal Liq. Mass Density (kg/m3)	997.8	997.8			
Act. Liq. Flow (barrel/day)	287.1	287.1			
Z Factor	0.1029	0.1029			
Watson K	8.497	8.497			
User Property	---	---			
Partial Pressure of H2S (psig)	-14.70	---			
Cp/(Cp - R)	1.120	1.120			
Cp/Cv	1.148	1.148			
Heat of Vap. (kJ/kgmole)	1.881e+004	---			
Kinematic Viscosity (cSt)	0.7854	0.7854			
Liq. Mass Density (Std. Cond) (kg/m3)	1015	1015			
Liq. Vol. Flow (Std. Cond) (barrel/day)	285.1	285.1			
Liquid Fraction	1.000	1.000			
Molar Volume (m3/kgmole)	1.789e-002	1.789e-002			
Mass Heat of Vap. (kJ/kg)	1044	---			
Phase Fraction [Molar Basis]	0.0000	1.0000			
Surface Tension (dyne/cm)	71.15	71.15			
Thermal Conductivity (W/m-K)	0.6187	0.6187			
Viscosity (cP)	0.7916	0.7916			
Cv (Semi-Ideal) (kJ/kgmole-C)	69.10	69.10			
Mass Cv (Semi-Ideal) (kJ/kg-C)	3.834	3.834			
Cv (kJ/kgmole-C)	67.44	67.44			
Mass Cv (kJ/kg-C)	3.741	3.741			
Cv (Ent. Method) (kJ/kgmole-C)	66.91	66.91			
Mass Cv (Ent. Method) (kJ/kg-C)	3.712	3.712			
Cp/Cv (Ent. Method)	1.157	1.157			
Reid VP at 37.8 C (psig)	---	---			
True VP at 37.8 C (psig)	17.11	17.11			
Liq. Vol. Flow - Sum(Std. Cond) (barrel/day)	285.1	285.1			
HHV Molar Basis (Std) (Btu/SCF)	46.45	46.45			
HHV Mass Basis (Std) (kJ/kg)	2274	2274			
CO2 Loading	---	---			
CO2 App ML Con (kgmole/m3)	2.222e-002	2.222e-002			
CO2 App WT Con (kgmol/kg)	2.204e-005	2.204e-005			
Phase Fraction [Act. Vol. Basis]	0.0000	1.000			
Mass Exergy (kJ/kg)	17.16	---			
Viscosity Index	-0.2852	---			
Ideal Gas Cp/Cv	1.329	1.329			
Ideal Gas Cp (kJ/kgmole-C)	33.61	33.61			
Mass Ideal Gas Cp (kJ/kg-C)	1.864	1.864			
Bubble Point Pressure (psig)	13.01	---			

COMPOSITION

Overall Phase

Vapour Fraction 0.0000

COMPONENTS	MOLAR FLOW (kgmole/h)	MOLE FRACTION	MASS FLOW (tonne/d)	MASS FRACTION	LIQUID VOLUME FLOW (m3/h)	LIQUID VOLUME FRACTION
Methane	0.0000	0.0000	0.0000	0.0000	0.0000	0.0000
Ethane	0.0000	0.0000	0.0000	0.0000	0.0000	0.0000
Propane	0.0000	0.0000	0.0000	0.0000	0.0000	0.0000
i-Butane	0.0000	0.0000	0.0000	0.0000	0.0000	0.0000
n-Butane	0.0000	0.0000	0.0000	0.0000	0.0000	0.0000

* Specified by user.

Material Stream: 3 (continued)

Fluid Package: Basis-1
Property Package: Peng-Robinson

COMPOSITION

Overall Phase (continued)

Vapour Fraction 0.0000

COMPONENTS	MOLAR FLOW (kgmole/h)	MOLE FRACTION	MASS FLOW (tonne/d)	MASS FRACTION	LIQUID VOLUME FLOW (m3/h)	LIQUID VOLUME FRACTION
i-Pentane	0.0000	0.0000	0.0000	0.0000	0.0000	0.0000
n-Pentane	0.0000	0.0000	0.0000	0.0000	0.0000	0.0000
n-Hexane	0.0000	0.0000	0.0000	0.0000	0.0000	0.0000
Nitrogen	0.0008	0.0000	0.0006	0.0000	0.0000	0.0000
CO2	0.0423	0.0004	0.0446	0.0010	0.0023	0.0012
H2S	0.0000	0.0000	0.0000	0.0000	0.0000	0.0000
H2O	106.2938	0.9996	45.9575	0.9990	1.9188	0.9988
NBP[1]95*	0.0000	0.0000	0.0000	0.0000	0.0000	0.0000
NBP[1]121*	0.0000	0.0000	0.0000	0.0000	0.0000	0.0000
NBP[1]147*	0.0000	0.0000	0.0000	0.0000	0.0000	0.0000
NBP[1]171*	0.0000	0.0000	0.0000	0.0000	0.0000	0.0000
NBP[1]195*	0.0000	0.0000	0.0000	0.0000	0.0000	0.0000
NBP[1]222*	0.0000	0.0000	0.0000	0.0000	0.0000	0.0000
NBP[1]248*	0.0000	0.0000	0.0000	0.0000	0.0000	0.0000
NBP[1]273*	0.0000	0.0000	0.0000	0.0000	0.0000	0.0000
NBP[1]299*	0.0000	0.0000	0.0000	0.0000	0.0000	0.0000
NBP[1]325*	0.0000	0.0000	0.0000	0.0000	0.0000	0.0000
NBP[1]351*	0.0000	0.0000	0.0000	0.0000	0.0000	0.0000
NBP[1]377*	0.0000	0.0000	0.0000	0.0000	0.0000	0.0000
NBP[1]402*	0.0000	0.0000	0.0000	0.0000	0.0000	0.0000
NBP[1]428*	0.0000	0.0000	0.0000	0.0000	0.0000	0.0000
NBP[1]454*	0.0000	0.0000	0.0000	0.0000	0.0000	0.0000
NBP[1]480*	0.0000	0.0000	0.0000	0.0000	0.0000	0.0000
NBP[1]505*	0.0000	0.0000	0.0000	0.0000	0.0000	0.0000
NBP[1]531*	0.0000	0.0000	0.0000	0.0000	0.0000	0.0000
NBP[1]557*	0.0000	0.0000	0.0000	0.0000	0.0000	0.0000
NBP[1]582*	0.0000	0.0000	0.0000	0.0000	0.0000	0.0000
NBP[1]608*	0.0000	0.0000	0.0000	0.0000	0.0000	0.0000
NBP[1]634*	0.0000	0.0000	0.0000	0.0000	0.0000	0.0000
NBP[1]659*	0.0000	0.0000	0.0000	0.0000	0.0000	0.0000
NBP[1]685*	0.0000	0.0000	0.0000	0.0000	0.0000	0.0000
NBP[1]711*	0.0000	0.0000	0.0000	0.0000	0.0000	0.0000
NBP[1]736*	0.0000	0.0000	0.0000	0.0000	0.0000	0.0000
NBP[1]762*	0.0000	0.0000	0.0000	0.0000	0.0000	0.0000
NBP[1]788*	0.0000	0.0000	0.0000	0.0000	0.0000	0.0000
NBP[1]825*	0.0000	0.0000	0.0000	0.0000	0.0000	0.0000
NBP[1]873*	0.0000	0.0000	0.0000	0.0000	0.0000	0.0000
NBP[1]926*	0.0000	0.0000	0.0000	0.0000	0.0000	0.0000
NBP[1]978*	0.0000	0.0000	0.0000	0.0000	0.0000	0.0000
NBP[1]1021*	0.0000	0.0000	0.0000	0.0000	0.0000	0.0000
NBP[1]1075*	0.0000	0.0000	0.0000	0.0000	0.0000	0.0000
NBP[1]1123*	0.0000	0.0000	0.0000	0.0000	0.0000	0.0000
NBP[1]1173*	0.0000	0.0000	0.0000	0.0000	0.0000	0.0000
NBP[1]1250*	0.0000	0.0000	0.0000	0.0000	0.0000	0.0000
NBP[1]1339*	0.0000	0.0000	0.0000	0.0000	0.0000	0.0000
NBP[1]1432*	0.0000	0.0000	0.0000	0.0000	0.0000	0.0000
NBP[1]1528*	0.0000	0.0000	0.0000	0.0000	0.0000	0.0000
NBP[1]1637*	0.0000	0.0000	0.0000	0.0000	0.0000	0.0000
NBP[1]1732*	0.0000	0.0000	0.0000	0.0000	0.0000	0.0000
NBP[1]1819*	0.0000	0.0000	0.0000	0.0000	0.0000	0.0000
NBP[1]1913*	0.0000	0.0000	0.0000	0.0000	0.0000	0.0000
Total	106.3369	1.0000	46.0026	1.0000	1.9210	1.0000

* Specified by user.

Material Stream: 3 (continued)

Fluid Package: Basis-1
Property Package: Peng-Robinson

COMPOSITION

Aqueous Phase

Phase Fraction 1.000

COMPONENTS	MOLAR FLOW (kgmole/h)	MOLE FRACTION	MASS FLOW (tonne/d)	MASS FRACTION	LIQUID VOLUME FLOW (m3/h)	LIQUID VOLUME FRACTION
Methane	0.0000	0.0000	0.0000	0.0000	0.0000	0.0000
Ethane	0.0000	0.0000	0.0000	0.0000	0.0000	0.0000
Propane	0.0000	0.0000	0.0000	0.0000	0.0000	0.0000
i-Butane	0.0000	0.0000	0.0000	0.0000	0.0000	0.0000
n-Butane	0.0000	0.0000	0.0000	0.0000	0.0000	0.0000
i-Pentane	0.0000	0.0000	0.0000	0.0000	0.0000	0.0000
n-Pentane	0.0000	0.0000	0.0000	0.0000	0.0000	0.0000
n-Hexane	0.0000	0.0000	0.0000	0.0000	0.0000	0.0000
Nitrogen	0.0008	0.0000	0.0006	0.0000	0.0000	0.0000
CO2	0.0423	0.0004	0.0446	0.0010	0.0023	0.0012
H2S	0.0000	0.0000	0.0000	0.0000	0.0000	0.0000
H2O	106.2938	0.9996	45.9575	0.9990	1.9188	0.9988
NBP[1]95*	0.0000	0.0000	0.0000	0.0000	0.0000	0.0000
NBP[1]121*	0.0000	0.0000	0.0000	0.0000	0.0000	0.0000
NBP[1]147*	0.0000	0.0000	0.0000	0.0000	0.0000	0.0000
NBP[1]171*	0.0000	0.0000	0.0000	0.0000	0.0000	0.0000
NBP[1]195*	0.0000	0.0000	0.0000	0.0000	0.0000	0.0000
NBP[1]222*	0.0000	0.0000	0.0000	0.0000	0.0000	0.0000
NBP[1]248*	0.0000	0.0000	0.0000	0.0000	0.0000	0.0000
NBP[1]273*	0.0000	0.0000	0.0000	0.0000	0.0000	0.0000
NBP[1]299*	0.0000	0.0000	0.0000	0.0000	0.0000	0.0000
NBP[1]325*	0.0000	0.0000	0.0000	0.0000	0.0000	0.0000
NBP[1]351*	0.0000	0.0000	0.0000	0.0000	0.0000	0.0000
NBP[1]377*	0.0000	0.0000	0.0000	0.0000	0.0000	0.0000
NBP[1]402*	0.0000	0.0000	0.0000	0.0000	0.0000	0.0000
NBP[1]428*	0.0000	0.0000	0.0000	0.0000	0.0000	0.0000
NBP[1]454*	0.0000	0.0000	0.0000	0.0000	0.0000	0.0000
NBP[1]480*	0.0000	0.0000	0.0000	0.0000	0.0000	0.0000
NBP[1]505*	0.0000	0.0000	0.0000	0.0000	0.0000	0.0000
NBP[1]531*	0.0000	0.0000	0.0000	0.0000	0.0000	0.0000
NBP[1]557*	0.0000	0.0000	0.0000	0.0000	0.0000	0.0000
NBP[1]582*	0.0000	0.0000	0.0000	0.0000	0.0000	0.0000
NBP[1]608*	0.0000	0.0000	0.0000	0.0000	0.0000	0.0000
NBP[1]634*	0.0000	0.0000	0.0000	0.0000	0.0000	0.0000
NBP[1]659*	0.0000	0.0000	0.0000	0.0000	0.0000	0.0000
NBP[1]685*	0.0000	0.0000	0.0000	0.0000	0.0000	0.0000
NBP[1]711*	0.0000	0.0000	0.0000	0.0000	0.0000	0.0000
NBP[1]736*	0.0000	0.0000	0.0000	0.0000	0.0000	0.0000
NBP[1]762*	0.0000	0.0000	0.0000	0.0000	0.0000	0.0000
NBP[1]788*	0.0000	0.0000	0.0000	0.0000	0.0000	0.0000
NBP[1]825*	0.0000	0.0000	0.0000	0.0000	0.0000	0.0000
NBP[1]873*	0.0000	0.0000	0.0000	0.0000	0.0000	0.0000
NBP[1]926*	0.0000	0.0000	0.0000	0.0000	0.0000	0.0000
NBP[1]978*	0.0000	0.0000	0.0000	0.0000	0.0000	0.0000
NBP[1]1021*	0.0000	0.0000	0.0000	0.0000	0.0000	0.0000
NBP[1]1075*	0.0000	0.0000	0.0000	0.0000	0.0000	0.0000
NBP[1]1123*	0.0000	0.0000	0.0000	0.0000	0.0000	0.0000
NBP[1]1173*	0.0000	0.0000	0.0000	0.0000	0.0000	0.0000
NBP[1]1250*	0.0000	0.0000	0.0000	0.0000	0.0000	0.0000
NBP[1]1339*	0.0000	0.0000	0.0000	0.0000	0.0000	0.0000
NBP[1]1432*	0.0000	0.0000	0.0000	0.0000	0.0000	0.0000
NBP[1]1528*	0.0000	0.0000	0.0000	0.0000	0.0000	0.0000
NBP[1]1637*	0.0000	0.0000	0.0000	0.0000	0.0000	0.0000
NBP[1]1732*	0.0000	0.0000	0.0000	0.0000	0.0000	0.0000

* Specified by user.

Material Stream: 3 (continued)

Fluid Package: Basis-1
Property Package: Peng-Robinson

COMPOSITION

Aqueous Phase (continued)

Phase Fraction 1.000

COMPONENTS	MOLAR FLOW (kgmole/h)	MOLE FRACTION	MASS FLOW (tonne/d)	MASS FRACTION	LIQUID VOLUME FLOW (m3/h)	LIQUID VOLUME FRACTION
NBP[1]1819*	0.0000	0.0000	0.0000	0.0000	0.0000	0.0000
NBP[1]1913*	0.0000	0.0000	0.0000	0.0000	0.0000	0.0000
Total	106.3369	1.0000	46.0026	1.0000	1.9210	1.0000

Material Stream: 4

Fluid Package: Basis-1
Property Package: Peng-Robinson

CONDITIONS

		Overall	Vapour Phase	Aqueous Phase		
Vapour / Phase Fraction		0.9992	0.9992	0.0008		
Temperature:	(F)	89.00 *	89.00	89.00		
Pressure:	(psig)	2090	2090	2090		
Molar Flow	(MMSCFD)	5.381	5.377	4.470e-003		
Mass Flow	(tonne/d)	137.6	137.5	9.639e-002		
Std Ideal Liq Vol Flow	(barrel/day)	2403	2402	0.6078		
Molar Enthalpy	(kJ/kgmole)	-9.218e+004	-9.202e+004	-2.856e+005		
Molar Entropy	(kJ/kgmole-C)	139.7	139.8	55.33		
Heat Flow	(MMBtu/hr)	-23.42	-23.36	-6.026e-002		
Liq Vol Flow @Std Cond	(barrel/day)	9.528e+005 *	9.521e+005	0.5972		

PROPERTIES

		Overall	Vapour Phase	Aqueous Phase		
Molecular Weight		21.39	21.39	18.04		
Molar Density	(kgmole/m3)	8.289	8.283	55.82		
Mass Density	(kg/m3)	177.3	177.2	1007		
Act. Volume Flow	(barrel/day)	4881	4880	0.6021		
Mass Enthalpy	(kJ/kg)	-4311	-4302	-1.583e+004		
Mass Entropy	(kJ/kg-C)	6.534	6.536	3.067		
Heat Capacity	(kJ/kgmole-C)	72.28	72.28	77.41		
Mass Heat Capacity	(kJ/kg-C)	3.380	3.379	4.291		
LHV Molar Basis (Std)	(Btu/SCF)	---	---	6.218e-004		
LHV Mass Basis (Std)	(kJ/kg)	---	---	3.042e-002		
Phase Fraction [Vol. Basis]		0.9997	0.9997	2.529e-004		
Phase Fraction [Mass Basis]		0.9993	0.9993	7.007e-004		
Partial Pressure of CO2	(psig)	57.08	---	---		
Cost Based on Flow	(Cost/s)	0.0000	0.0000	0.0000		
Act. Gas Flow	(ACT_m3/h)	32.33	32.33	---		
Avg. Liq. Density	(kgmole/m3)	16.84	16.83	55.29		
Specific Heat	(kJ/kgmole-C)	72.28	72.28	77.41		
Std. Gas Flow	(STD_m3/h)	6337	6332	5.264		
Std. Ideal Liq. Mass Density	(kg/m3)	360.1	359.9	997.5		
Act. Liq. Flow	(barrel/day)	0.6021	---	0.6021		
Z Factor		---	0.6913	0.1026		
Watson K		17.28	17.28	8.473		
User Property		---	---	---		
Partial Pressure of H2S	(psig)	-14.69	---	---		
Cp/(Cp - R)		1.130	1.130	1.120		
Cp/Cv		1.988	1.989	1.149		
Heat of Vap.	(kJ/kgmole)	---	---	---		
Kinematic Viscosity	(cSt)	---	0.1150	0.7977		
Liq. Mass Density (Std. Cond)	(kg/m3)	0.9081	0.9082	1015		
Liq. Vol. Flow (Std. Cond)	(barrel/day)	9.528e+005	9.521e+005	0.5972		
Liquid Fraction		8.306e-004	0.0000	1.000		
Molar Volume	(m3/kgmole)	0.1206	0.1207	1.791e-002		

* Specified by user.

Material Stream: 4 (continued)

Fluid Package: Basis-1
Property Package: Peng-Robinson

PROPERTIES

		Overall	Vapour Phase	Aqueous Phase		
Mass Heat of Vap.	(kJ/kg)	---	---	---		
Phase Fraction [Molar Basis]		0.9992	0.9992	0.0008		
Surface Tension	(dyne/cm)	70.87	---	70.87		
Thermal Conductivity	(W/m-K)	---	5.535e-002	0.6196		
Viscosity	(cP)	---	2.037e-002	0.8033		
Cv (Semi-Ideal)	(kJ/kgmole-C)	63.97	63.96	69.10		
Mass Cv (Semi-Ideal)	(kJ/kg-C)	2.991	2.990	3.830		
Cv	(kJ/kgmole-C)	36.36	36.33	67.39		
Mass Cv	(kJ/kg-C)	1.700	1.699	3.735		
Cv (Ent. Method)	(kJ/kgmole-C)	37.47	36.33	66.85		
Mass Cv (Ent. Method)	(kJ/kg-C)	1.752	1.699	3.705		
Cp/Cv (Ent. Method)		1.929	1.989	1.158		
Reid VP at 37.8 C	(psig)	---	---	---		
True VP at 37.8 C	(psig)	3607	---	176.8		
Liq. Vol. Flow - Sum(Std. Cond)	(barrel/day)	9.521e+005	9.521e+005	0.5972		
HHV Molar Basis (Std)	(Btu/SCF)	---	---	46.42		
HHV Mass Basis (Std)	(kJ/kg)	---	---	2271		
CO2 Loading		---	---	---		
CO2 App ML Con	(kgmole/m3)	---	---	5.413e-002		
CO2 App WT Con	(kgmol/kg)	---	---	5.375e-005		
Phase Fraction [Act. Vol. Basis]		0.9999	0.9999	1.233e-004		
Mass Exergy	(kJ/kg)	523.8	---	---		
Viscosity Index		---	---	---		
Ideal Gas Cp/Cv		1.248	1.248	1.329		
Ideal Gas Cp	(kJ/kgmole-C)	41.87	41.87	33.62		
Mass Ideal Gas Cp	(kJ/kg-C)	1.958	1.958	1.863		
Bubble Point Pressure	(psig)	4590	---	---		

COMPOSITION

Overall Phase

Vapour Fraction 0.9992

COMPONENTS	MOLAR FLOW (kgmole/h)	MOLE FRACTION	MASS FLOW (tonne/d)	MASS FRACTION	LIQUID VOLUME FLOW (m3/h)	LIQUID VOLUME FRACTION
Methane	205.0219	0.7649	78.9395	0.5738	10.9860	0.6901
Ethane	27.6541	0.1032	19.9573	0.1451	2.3379	0.1469
Propane	13.5902	0.0507	14.3829	0.1046	1.1828	0.0743
i-Butane	1.5866	0.0059	2.2133	0.0161	0.1641	0.0103
n-Butane	2.8841	0.0108	4.0233	0.0292	0.2874	0.0181
i-Pentane	0.4635	0.0017	0.8025	0.0058	0.0536	0.0034
n-Pentane	0.4652	0.0017	0.8056	0.0059	0.0533	0.0033
n-Hexane	0.3694	0.0014	0.7639	0.0056	0.0480	0.0030
Nitrogen	5.5752	0.0208	3.7483	0.0272	0.1937	0.0122
CO2	9.1335	0.0341	9.6471	0.0701	0.4870	0.0306
H2S	0.0005	0.0000	0.0004	0.0000	0.0000	0.0000
H2O	0.3945	0.0015	0.1706	0.0012	0.0071	0.0004
NBP[1]95*	0.1425	0.0005	0.2323	0.0017	0.0142	0.0009
NBP[1]121*	0.1318	0.0005	0.2305	0.0017	0.0139	0.0009
NBP[1]147*	0.1254	0.0005	0.2414	0.0018	0.0144	0.0009
NBP[1]171*	0.1733	0.0006	0.3646	0.0027	0.0213	0.0013
NBP[1]195*	0.1579	0.0006	0.3546	0.0026	0.0205	0.0013
NBP[1]222*	0.0732	0.0003	0.1768	0.0013	0.0101	0.0006
NBP[1]248*	0.0375	0.0001	0.0974	0.0007	0.0055	0.0003
NBP[1]273*	0.0181	0.0001	0.0503	0.0004	0.0028	0.0002
NBP[1]299*	0.0083	0.0000	0.0245	0.0002	0.0014	0.0001
NBP[1]325*	0.0033	0.0000	0.0105	0.0001	0.0006	0.0000
NBP[1]351*	0.0015	0.0000	0.0050	0.0000	0.0003	0.0000
NBP[1]377*	0.0007	0.0000	0.0025	0.0000	0.0001	0.0000

Licensed to: PETROCHEMICAL ENGINEERIN
* Specified by user.

Material Stream: 4 (continued)

Fluid Package: Basis-1
Property Package: Peng-Robinson

COMPOSITION

Overall Phase (continued)

Vapour Fraction 0.9992

COMPONENTS	MOLAR FLOW (kgmole/h)	MOLE FRACTION	MASS FLOW (tonne/d)	MASS FRACTION	LIQUID VOLUME FLOW (m3/h)	LIQUID VOLUME FRACTION
NBP[1]402*	0.0003	0.0000	0.0013	0.0000	0.0001	0.0000
NBP[1]428*	0.0002	0.0000	0.0007	0.0000	0.0000	0.0000
NBP[1]454*	0.0001	0.0000	0.0003	0.0000	0.0000	0.0000
NBP[1]480*	0.0000	0.0000	0.0002	0.0000	0.0000	0.0000
NBP[1]505*	0.0000	0.0000	0.0001	0.0000	0.0000	0.0000
NBP[1]531*	0.0000	0.0000	0.0000	0.0000	0.0000	0.0000
NBP[1]557*	0.0000	0.0000	0.0000	0.0000	0.0000	0.0000
NBP[1]582*	0.0000	0.0000	0.0000	0.0000	0.0000	0.0000
NBP[1]608*	0.0000	0.0000	0.0000	0.0000	0.0000	0.0000
NBP[1]634*	0.0000	0.0000	0.0000	0.0000	0.0000	0.0000
NBP[1]659*	0.0000	0.0000	0.0000	0.0000	0.0000	0.0000
NBP[1]685*	0.0000	0.0000	0.0000	0.0000	0.0000	0.0000
NBP[1]711*	0.0000	0.0000	0.0000	0.0000	0.0000	0.0000
NBP[1]736*	0.0000	0.0000	0.0000	0.0000	0.0000	0.0000
NBP[1]762*	0.0000	0.0000	0.0000	0.0000	0.0000	0.0000
NBP[1]788*	0.0000	0.0000	0.0000	0.0000	0.0000	0.0000
NBP[1]825*	0.0000	0.0000	0.0000	0.0000	0.0000	0.0000
NBP[1]873*	0.0000	0.0000	0.0000	0.0000	0.0000	0.0000
NBP[1]926*	0.0000	0.0000	0.0000	0.0000	0.0000	0.0000
NBP[1]978*	0.0000	0.0000	0.0000	0.0000	0.0000	0.0000
NBP[1]1021*	0.0000	0.0000	0.0000	0.0000	0.0000	0.0000
NBP[1]1075*	0.0000	0.0000	0.0000	0.0000	0.0000	0.0000
NBP[1]1123*	0.0000	0.0000	0.0000	0.0000	0.0000	0.0000
NBP[1]1173*	0.0000	0.0000	0.0000	0.0000	0.0000	0.0000
NBP[1]1250*	0.0000	0.0000	0.0000	0.0000	0.0000	0.0000
NBP[1]1339*	0.0000	0.0000	0.0000	0.0000	0.0000	0.0000
NBP[1]1432*	0.0000	0.0000	0.0000	0.0000	0.0000	0.0000
NBP[1]1528*	0.0000	0.0000	0.0000	0.0000	0.0000	0.0000
NBP[1]1637*	0.0000	0.0000	0.0000	0.0000	0.0000	0.0000
NBP[1]1732*	0.0000	0.0000	0.0000	0.0000	0.0000	0.0000
NBP[1]1819*	0.0001	0.0000	0.0029	0.0000	0.0001	0.0000
NBP[1]1913*	0.0112	0.0000	0.3148	0.0023	0.0121	0.0008
Total	268.0242	1.0000	137.5655	1.0000	15.9186	1.0000

Vapour Phase

Phase Fraction 0.9992

COMPONENTS	MOLAR FLOW (kgmole/h)	MOLE FRACTION	MASS FLOW (tonne/d)	MASS FRACTION	LIQUID VOLUME FLOW (m3/h)	LIQUID VOLUME FRACTION
Methane	205.0219	0.7656	78.9395	0.5742	10.9860	0.6903
Ethane	27.6541	0.1033	19.9573	0.1452	2.3379	0.1469
Propane	13.5902	0.0507	14.3829	0.1046	1.1828	0.0743
i-Butane	1.5866	0.0059	2.2133	0.0161	0.1641	0.0103
n-Butane	2.8841	0.0108	4.0233	0.0293	0.2874	0.0181
i-Pentane	0.4635	0.0017	0.8025	0.0058	0.0536	0.0034
n-Pentane	0.4652	0.0017	0.8056	0.0059	0.0533	0.0033
n-Hexane	0.3694	0.0014	0.7639	0.0056	0.0480	0.0030
Nitrogen	5.5752	0.0208	3.7483	0.0273	0.1937	0.0122
CO2	9.1333	0.0341	9.6469	0.0702	0.4870	0.0306
H2S	0.0005	0.0000	0.0004	0.0000	0.0000	0.0000
H2O	0.1721	0.0006	0.0744	0.0005	0.0031	0.0002
NBP[1]95*	0.1425	0.0005	0.2323	0.0017	0.0142	0.0009
NBP[1]121*	0.1318	0.0005	0.2305	0.0017	0.0139	0.0009
NBP[1]147*	0.1254	0.0005	0.2414	0.0018	0.0144	0.0009
NBP[1]171*	0.1733	0.0006	0.3646	0.0027	0.0213	0.0013
NBP[1]195*	0.1579	0.0006	0.3546	0.0026	0.0205	0.0013

* Specified by user.

Material Stream: 4 (continued)

Fluid Package: Basis-1
Property Package: Peng-Robinson

COMPOSITION

Vapour Phase (continued)

Phase Fraction 0.9992

COMPONENTS	MOLAR FLOW (kgmole/h)	MOLE FRACTION	MASS FLOW (tonne/d)	MASS FRACTION	LIQUID VOLUME FLOW (m3/h)	LIQUID VOLUME FRACTION
NBP[1]222*	0.0732	0.0003	0.1768	0.0013	0.0101	0.0006
NBP[1]248*	0.0375	0.0001	0.0974	0.0007	0.0055	0.0003
NBP[1]273*	0.0181	0.0001	0.0503	0.0004	0.0028	0.0002
NBP[1]299*	0.0083	0.0000	0.0245	0.0002	0.0014	0.0001
NBP[1]325*	0.0033	0.0000	0.0105	0.0001	0.0006	0.0000
NBP[1]351*	0.0015	0.0000	0.0050	0.0000	0.0003	0.0000
NBP[1]377*	0.0007	0.0000	0.0025	0.0000	0.0001	0.0000
NBP[1]402*	0.0003	0.0000	0.0013	0.0000	0.0001	0.0000
NBP[1]428*	0.0002	0.0000	0.0007	0.0000	0.0000	0.0000
NBP[1]454*	0.0001	0.0000	0.0003	0.0000	0.0000	0.0000
NBP[1]480*	0.0000	0.0000	0.0002	0.0000	0.0000	0.0000
NBP[1]505*	0.0000	0.0000	0.0001	0.0000	0.0000	0.0000
NBP[1]531*	0.0000	0.0000	0.0000	0.0000	0.0000	0.0000
NBP[1]557*	0.0000	0.0000	0.0000	0.0000	0.0000	0.0000
NBP[1]582*	0.0000	0.0000	0.0000	0.0000	0.0000	0.0000
NBP[1]608*	0.0000	0.0000	0.0000	0.0000	0.0000	0.0000
NBP[1]634*	0.0000	0.0000	0.0000	0.0000	0.0000	0.0000
NBP[1]659*	0.0000	0.0000	0.0000	0.0000	0.0000	0.0000
NBP[1]685*	0.0000	0.0000	0.0000	0.0000	0.0000	0.0000
NBP[1]711*	0.0000	0.0000	0.0000	0.0000	0.0000	0.0000
NBP[1]736*	0.0000	0.0000	0.0000	0.0000	0.0000	0.0000
NBP[1]762*	0.0000	0.0000	0.0000	0.0000	0.0000	0.0000
NBP[1]788*	0.0000	0.0000	0.0000	0.0000	0.0000	0.0000
NBP[1]825*	0.0000	0.0000	0.0000	0.0000	0.0000	0.0000
NBP[1]873*	0.0000	0.0000	0.0000	0.0000	0.0000	0.0000
NBP[1]926*	0.0000	0.0000	0.0000	0.0000	0.0000	0.0000
NBP[1]978*	0.0000	0.0000	0.0000	0.0000	0.0000	0.0000
NBP[1]1021*	0.0000	0.0000	0.0000	0.0000	0.0000	0.0000
NBP[1]1075*	0.0000	0.0000	0.0000	0.0000	0.0000	0.0000
NBP[1]1123*	0.0000	0.0000	0.0000	0.0000	0.0000	0.0000
NBP[1]1173*	0.0000	0.0000	0.0000	0.0000	0.0000	0.0000
NBP[1]1250*	0.0000	0.0000	0.0000	0.0000	0.0000	0.0000
NBP[1]1339*	0.0000	0.0000	0.0000	0.0000	0.0000	0.0000
NBP[1]1432*	0.0000	0.0000	0.0000	0.0000	0.0000	0.0000
NBP[1]1528*	0.0000	0.0000	0.0000	0.0000	0.0000	0.0000
NBP[1]1637*	0.0000	0.0000	0.0000	0.0000	0.0000	0.0000
NBP[1]1732*	0.0000	0.0000	0.0000	0.0000	0.0000	0.0000
NBP[1]1819*	0.0001	0.0000	0.0029	0.0000	0.0001	0.0000
NBP[1]1913*	0.0112	0.0000	0.3148	0.0023	0.0121	0.0008
Total	267.8016	1.0000	137.4691	1.0000	15.9145	1.0000

Aqueous Phase

Phase Fraction 8.306e-004

COMPONENTS	MOLAR FLOW (kgmole/h)	MOLE FRACTION	MASS FLOW (tonne/d)	MASS FRACTION	LIQUID VOLUME FLOW (m3/h)	LIQUID VOLUME FRACTION
Methane	0.0000	0.0000	0.0000	0.0000	0.0000	0.0000
Ethane	0.0000	0.0000	0.0000	0.0000	0.0000	0.0000
Propane	0.0000	0.0000	0.0000	0.0000	0.0000	0.0000
i-Butane	0.0000	0.0000	0.0000	0.0000	0.0000	0.0000
n-Butane	0.0000	0.0000	0.0000	0.0000	0.0000	0.0000
i-Pentane	0.0000	0.0000	0.0000	0.0000	0.0000	0.0000
n-Pentane	0.0000	0.0000	0.0000	0.0000	0.0000	0.0000
n-Hexane	0.0000	0.0000	0.0000	0.0000	0.0000	0.0000
Nitrogen	0.0000	0.0000	0.0000	0.0001	0.0000	0.0001
CO2	0.0002	0.0010	0.0002	0.0024	0.0000	0.0029

* Specified by user.

Material Stream: 4 (continued)

Fluid Package: Basis-1
Property Package: Peng-Robinson

COMPOSITION

Aqueous Phase (continued)

Phase Fraction 8.306e-004

COMPONENTS	MOLAR FLOW (kgmole/h)	MOLE FRACTION	MASS FLOW (tonne/d)	MASS FRACTION	LIQUID VOLUME FLOW (m3/h)	LIQUID VOLUME FRACTION
H2S	0.0000	0.0000	0.0000	0.0000	0.0000	0.0000
H2O	0.2224	0.9990	0.0962	0.9976	0.0040	0.9971
NBP[1]95*	0.0000	0.0000	0.0000	0.0000	0.0000	0.0000
NBP[1]121*	0.0000	0.0000	0.0000	0.0000	0.0000	0.0000
NBP[1]147*	0.0000	0.0000	0.0000	0.0000	0.0000	0.0000
NBP[1]171*	0.0000	0.0000	0.0000	0.0000	0.0000	0.0000
NBP[1]195*	0.0000	0.0000	0.0000	0.0000	0.0000	0.0000
NBP[1]222*	0.0000	0.0000	0.0000	0.0000	0.0000	0.0000
NBP[1]248*	0.0000	0.0000	0.0000	0.0000	0.0000	0.0000
NBP[1]273*	0.0000	0.0000	0.0000	0.0000	0.0000	0.0000
NBP[1]299*	0.0000	0.0000	0.0000	0.0000	0.0000	0.0000
NBP[1]325*	0.0000	0.0000	0.0000	0.0000	0.0000	0.0000
NBP[1]351*	0.0000	0.0000	0.0000	0.0000	0.0000	0.0000
NBP[1]377*	0.0000	0.0000	0.0000	0.0000	0.0000	0.0000
NBP[1]402*	0.0000	0.0000	0.0000	0.0000	0.0000	0.0000
NBP[1]428*	0.0000	0.0000	0.0000	0.0000	0.0000	0.0000
NBP[1]454*	0.0000	0.0000	0.0000	0.0000	0.0000	0.0000
NBP[1]480*	0.0000	0.0000	0.0000	0.0000	0.0000	0.0000
NBP[1]505*	0.0000	0.0000	0.0000	0.0000	0.0000	0.0000
NBP[1]531*	0.0000	0.0000	0.0000	0.0000	0.0000	0.0000
NBP[1]557*	0.0000	0.0000	0.0000	0.0000	0.0000	0.0000
NBP[1]582*	0.0000	0.0000	0.0000	0.0000	0.0000	0.0000
NBP[1]608*	0.0000	0.0000	0.0000	0.0000	0.0000	0.0000
NBP[1]634*	0.0000	0.0000	0.0000	0.0000	0.0000	0.0000
NBP[1]659*	0.0000	0.0000	0.0000	0.0000	0.0000	0.0000
NBP[1]685*	0.0000	0.0000	0.0000	0.0000	0.0000	0.0000
NBP[1]711*	0.0000	0.0000	0.0000	0.0000	0.0000	0.0000
NBP[1]736*	0.0000	0.0000	0.0000	0.0000	0.0000	0.0000
NBP[1]762*	0.0000	0.0000	0.0000	0.0000	0.0000	0.0000
NBP[1]788*	0.0000	0.0000	0.0000	0.0000	0.0000	0.0000
NBP[1]825*	0.0000	0.0000	0.0000	0.0000	0.0000	0.0000
NBP[1]873*	0.0000	0.0000	0.0000	0.0000	0.0000	0.0000
NBP[1]926*	0.0000	0.0000	0.0000	0.0000	0.0000	0.0000
NBP[1]978*	0.0000	0.0000	0.0000	0.0000	0.0000	0.0000
NBP[1]1021*	0.0000	0.0000	0.0000	0.0000	0.0000	0.0000
NBP[1]1075*	0.0000	0.0000	0.0000	0.0000	0.0000	0.0000
NBP[1]1123*	0.0000	0.0000	0.0000	0.0000	0.0000	0.0000
NBP[1]1173*	0.0000	0.0000	0.0000	0.0000	0.0000	0.0000
NBP[1]1250*	0.0000	0.0000	0.0000	0.0000	0.0000	0.0000
NBP[1]1339*	0.0000	0.0000	0.0000	0.0000	0.0000	0.0000
NBP[1]1432*	0.0000	0.0000	0.0000	0.0000	0.0000	0.0000
NBP[1]1528*	0.0000	0.0000	0.0000	0.0000	0.0000	0.0000
NBP[1]1637*	0.0000	0.0000	0.0000	0.0000	0.0000	0.0000
NBP[1]1732*	0.0000	0.0000	0.0000	0.0000	0.0000	0.0000
NBP[1]1819*	0.0000	0.0000	0.0000	0.0000	0.0000	0.0000
NBP[1]1913*	0.0000	0.0000	0.0000	0.0000	0.0000	0.0000
Total	0.2226	1.0000	0.0964	1.0000	0.0040	1.0000

Material Stream: 5

Fluid Package: Basis-1
Property Package: Peng-Robinson

CONDITIONS

	Overall	Vapour Phase	Liquid Phase	Aqueous Phase
Vapour / Phase Fraction	0.6644	0.6644	0.0637	0.2719

Licensed to: PETROCHEMICAL ENGINEERIN
* Specified by user.

Material Stream: 5 (continued)

Fluid Package: Basis-1
Property Package: Peng-Robinson

CONDITIONS

		Overall	Vapour Phase	Liquid Phase	Aqueous Phase
Temperature:	(F)	89.98	89.98	89.98	89.98
Pressure:	(psig)	2090	2090	2090	2090
Molar Flow	(MMSCFD)	7.874	5.231	0.5019	2.140
Mass Flow	(tonne/d)	237.5	139.1	52.25	46.16
Std Ideal Liq Vol Flow	(barrel/day)	3142	2371	479.9	291.0
Molar Enthalpy	(kJ/kgmole)	-1.534e+005	-9.314e+004	-2.178e+005	-2.855e+005
Molar Entropy	(kJ/kgmole-C)	120.5	139.7	197.5	55.46
Heat Flow	(MMBtu/hr)	-57.01	-23.00	-5.161	-28.85
Liq Vol Flow @Std Cond	(barrel/day)	2.954e+005 *	9.260e+005	461.5	286.0

PROPERTIES

		Overall	Vapour Phase	Liquid Phase	Aqueous Phase
Molecular Weight		25.24	22.25	87.09	18.04
Molar Density	(kgmole/m3)	10.98	8.487	8.041	55.80
Mass Density	(kg/m3)	277.1	188.8	700.3	1007
Act. Volume Flow	(barrel/day)	5392	4634	469.3	288.4
Mass Enthalpy	(kJ/kg)	-6077	-4186	-2501	-1.583e+004
Mass Entropy	(kJ/kg-C)	4.773	6.278	2.268	3.074
Heat Capacity	(kJ/kgmole-C)	83.30	76.12	183.3	77.41
Mass Heat Capacity	(kJ/kg-C)	3.300	3.421	2.104	4.291
LHV Molar Basis (Std)	(Btu/SCF)	---	---	---	6.334e-004
LHV Mass Basis (Std)	(kJ/kg)	---	---	---	3.099e-002
Phase Fraction [Vol. Basis]		0.7547	0.7547	0.1527	9.262e-002
Phase Fraction [Mass Basis]		0.5858	0.5858	0.2199	0.1943
Partial Pressure of CO2	(psig)	54.43	---	---	---
Cost Based on Flow	(Cost/s)	0.0000	0.0000	0.0000	0.0000
Act. Gas Flow	(ACT_m3/h)	30.70	30.70	---	---
Avg. Liq. Density	(kgmole/m3)	18.84	16.59	7.864	55.30
Specific Heat	(kJ/kgmole-C)	83.30	76.12	183.3	77.41
Std. Gas Flow	(STD_m3/h)	9272	6161	591.0	2521
Std. Ideal Liq. Mass Density	(kg/m3)	475.5	369.1	684.8	997.5
Act. Liq. Flow	(barrel/day)	757.7	---	469.3	288.4
Z Factor		---	0.6735	0.7108	0.1024
Watson K		15.58	16.99	12.28	8.469
User Property		---	---	---	---
Partial Pressure of H2S	(psig)	-14.69	---	---	---
Cp/(Cp - R)		1.111	1.123	1.048	1.120
Cp/Cv		1.471	2.007	1.291	1.149
Heat of Vap.	(kJ/kgmole)	6.038e+004	---	---	---
Kinematic Viscosity	(cSt)	---	0.1117	1.948	0.7558
Liq. Mass Density (Std. Cond)	(kg/m3)	5.058	0.9452	712.1	1015
Liq. Vol. Flow (Std. Cond)	(barrel/day)	2.954e+005	9.260e+005	461.5	286.0
Liquid Fraction		0.3356	0.0000	1.000	1.000
Molar Volume	(m3/kgmole)	9.108e-002	0.1178	0.1244	1.792e-002
Mass Heat of Vap.	(kJ/kg)	2392	---	---	---
Phase Fraction [Molar Basis]		0.6644	0.6644	0.0637	0.2719
Surface Tension	(dyne/cm)	---	---	9.238	70.78
Thermal Conductivity	(W/m-K)	---	5.650e-002	8.530e-002	0.6213
Viscosity	(cP)	---	2.109e-002	1.364	0.7608
Cv (Semi-Ideal)	(kJ/kgmole-C)	74.98	67.80	175.0	69.10
Mass Cv (Semi-Ideal)	(kJ/kg-C)	2.971	3.047	2.009	3.831
Cv	(kJ/kgmole-C)	56.65	37.93	142.0	67.38
Mass Cv	(kJ/kg-C)	2.244	1.705	1.630	3.735
Cv (Ent. Method)	(kJ/kgmole-C)	---	36.85	---	66.76
Mass Cv (Ent. Method)	(kJ/kg-C)	---	1.656	---	3.701
Cp/Cv (Ent. Method)		---	2.065	---	1.160
Reid VP at 37.8 C	(psig)	3319	2452	399.0	---

* Specified by user.

Material Stream: 5 (continued)

Fluid Package: Basis-1
Property Package: Peng-Robinson

PROPERTIES

		Overall	Vapour Phase	Liquid Phase	Aqueous Phase
True VP at 37.8 C	(psig)	6318	2453	2168	182.1
Liq. Vol. Flow - Sum(Std. Cond)	(barrel/day)	9.267e+005	9.260e+005	461.5	286.0
HHV Molar Basis (Std)	(Btu/SCF)	---	---	---	46.42
HHV Mass Basis (Std)	(kJ/kg)	---	---	---	2271
CO2 Loading		---	---	---	---
CO2 App ML Con	(kgmole/m3)	---	---	0.2444	5.118e-002
CO2 App WT Con	(kgmol/kg)	---	---	3.490e-004	5.084e-005
Phase Fraction [Act. Vol. Basis]		0.8595	0.8595	8.703e-002	5.349e-002
Mass Exergy	(kJ/kg)	317.7	---	---	---
Viscosity Index		-33.28	---	---	---
Ideal Gas Cp/Cv		1.215	1.238	1.062	1.329
Ideal Gas Cp	(kJ/kgmole-C)	46.91	43.24	141.8	33.62
Mass Ideal Gas Cp	(kJ/kg-C)	1.859	1.943	1.628	1.864
Bubble Point Pressure	(psig)	6228	---	---	---

COMPOSITION

Overall Phase

Vapour Fraction 0.6644

COMPONENTS	MOLAR FLOW (kgmole/h)	MOLE FRACTION	MASS FLOW (tonne/d)	MASS FRACTION	LIQUID VOLUME FLOW (m3/h)	LIQUID VOLUME FRACTION
Methane	207.0440	0.5280	79.7181	0.3356	11.0944	0.5330
Ethane	28.8006	0.0734	20.7848	0.0875	2.4348	0.1170
Propane	15.2677	0.0389	16.1583	0.0680	1.3288	0.0638
i-Butane	2.0287	0.0052	2.8300	0.0119	0.2098	0.0101
n-Butane	3.9513	0.0101	5.5120	0.0232	0.3938	0.0189
i-Pentane	0.8495	0.0022	1.4710	0.0062	0.0983	0.0047
n-Pentane	0.9602	0.0024	1.6627	0.0070	0.1100	0.0053
n-Hexane	1.4698	0.0037	3.0399	0.0128	0.1911	0.0092
Nitrogen	5.5989	0.0143	3.7642	0.0158	0.1945	0.0093
CO2	9.4151	0.0240	9.9445	0.0419	0.5020	0.0241
H2S	0.0006	0.0000	0.0005	0.0000	0.0000	0.0000
H2O	106.6990	0.2721	46.1326	0.1942	1.9261	0.0925
NBP[1]95*	0.2883	0.0007	0.4699	0.0020	0.0288	0.0014
NBP[1]121*	0.3381	0.0009	0.5912	0.0025	0.0358	0.0017
NBP[1]147*	0.4314	0.0011	0.8304	0.0035	0.0494	0.0024
NBP[1]171*	0.8224	0.0021	1.7306	0.0073	0.1013	0.0049
NBP[1]195*	1.0758	0.0027	2.4160	0.0102	0.1398	0.0067
NBP[1]222*	0.8003	0.0020	1.9331	0.0081	0.1105	0.0053
NBP[1]248*	0.6657	0.0017	1.7287	0.0073	0.0976	0.0047
NBP[1]273*	0.5358	0.0014	1.4881	0.0063	0.0831	0.0040
NBP[1]299*	0.4185	0.0011	1.2393	0.0052	0.0684	0.0033
NBP[1]325*	0.3029	0.0008	0.9528	0.0040	0.0521	0.0025
NBP[1]351*	0.2456	0.0006	0.8214	0.0035	0.0445	0.0021
NBP[1]377*	0.2247	0.0006	0.8014	0.0034	0.0429	0.0021
NBP[1]402*	0.2061	0.0005	0.7838	0.0033	0.0416	0.0020
NBP[1]428*	0.1961	0.0005	0.7956	0.0033	0.0418	0.0020
NBP[1]454*	0.1956	0.0005	0.8480	0.0036	0.0441	0.0021
NBP[1]480*	0.1982	0.0005	0.9182	0.0039	0.0473	0.0023
NBP[1]505*	0.1920	0.0005	0.9484	0.0040	0.0484	0.0023
NBP[1]531*	0.1852	0.0005	0.9740	0.0041	0.0492	0.0024
NBP[1]557*	0.1784	0.0005	0.9978	0.0042	0.0500	0.0024
NBP[1]582*	0.1706	0.0004	1.0132	0.0043	0.0503	0.0024
NBP[1]608*	0.1643	0.0004	1.0351	0.0044	0.0510	0.0025
NBP[1]634*	0.1611	0.0004	1.0753	0.0045	0.0526	0.0025
NBP[1]659*	0.1586	0.0004	1.1194	0.0047	0.0543	0.0026
NBP[1]685*	0.1641	0.0004	1.2227	0.0051	0.0588	0.0028
NBP[1]711*	0.1715	0.0004	1.3445	0.0057	0.0642	0.0031

Licensed to: PETROCHEMICAL ENGINEERIN
* Specified by user.

Material Stream: 5 (continued)

Fluid Package: Basis-1
Property Package: Peng-Robinson

COMPOSITION

Overall Phase (continued)

Vapour Fraction 0.6644

COMPONENTS	MOLAR FLOW (kgmole/h)	MOLE FRACTION	MASS FLOW (tonne/d)	MASS FRACTION	LIQUID VOLUME FLOW (m3/h)	LIQUID VOLUME FRACTION
NBP[1]736*	0.1697	0.0004	1.3915	0.0059	0.0659	0.0032
NBP[1]762*	0.1653	0.0004	1.4214	0.0060	0.0669	0.0032
NBP[1]788*	0.1585	0.0004	1.4424	0.0061	0.0674	0.0032
NBP[1]825*	0.2655	0.0007	2.5963	0.0109	0.1201	0.0058
NBP[1]873*	0.1830	0.0005	1.9404	0.0082	0.0887	0.0043
NBP[1]926*	0.1437	0.0004	1.6472	0.0069	0.0744	0.0036
NBP[1]978*	0.1474	0.0004	1.8524	0.0078	0.0825	0.0040
NBP[1]1021*	0.0728	0.0002	0.9655	0.0041	0.0426	0.0020
NBP[1]1075*	0.0449	0.0001	0.6310	0.0027	0.0276	0.0013
NBP[1]1123*	0.0417	0.0001	0.6267	0.0026	0.0271	0.0013
NBP[1]1173*	0.0300	0.0001	0.4772	0.0020	0.0205	0.0010
NBP[1]1250*	0.0393	0.0001	0.6767	0.0028	0.0287	0.0014
NBP[1]1339*	0.0364	0.0001	0.6999	0.0029	0.0291	0.0014
NBP[1]1432*	0.0257	0.0001	0.5397	0.0023	0.0221	0.0011
NBP[1]1528*	0.0180	0.0000	0.4082	0.0017	0.0165	0.0008
NBP[1]1637*	0.0127	0.0000	0.3047	0.0013	0.0122	0.0006
NBP[1]1732*	0.0101	0.0000	0.2565	0.0011	0.0101	0.0005
NBP[1]1819*	0.0097	0.0000	0.2590	0.0011	0.0101	0.0005
NBP[1]1913*	0.0112	0.0000	0.3148	0.0013	0.0121	0.0006
Total	392.1623	1.0000	237.5489	1.0000	20.8162	1.0000

Vapour Phase

Phase Fraction 0.6644

COMPONENTS	MOLAR FLOW (kgmole/h)	MOLE FRACTION	MASS FLOW (tonne/d)	MASS FRACTION	LIQUID VOLUME FLOW (m3/h)	LIQUID VOLUME FRACTION
Methane	197.5775	0.7583	76.0732	0.5467	10.5871	0.6739
Ethane	26.2225	0.1006	18.9242	0.1360	2.2169	0.1411
Propane	13.0983	0.0503	13.8623	0.0996	1.1400	0.0726
i-Butane	1.6359	0.0063	2.2820	0.0164	0.1692	0.0108
n-Butane	3.0834	0.0118	4.3013	0.0309	0.3073	0.0196
i-Pentane	0.6045	0.0023	1.0467	0.0075	0.0700	0.0045
n-Pentane	0.6554	0.0025	1.1349	0.0082	0.0751	0.0048
n-Hexane	0.8360	0.0032	1.7292	0.0124	0.1087	0.0069
Nitrogen	5.4316	0.0208	3.6517	0.0262	0.1887	0.0120
CO2	8.5576	0.0328	9.0388	0.0650	0.4563	0.0290
H2S	0.0005	0.0000	0.0004	0.0000	0.0000	0.0000
H2O	0.1735	0.0007	0.0750	0.0005	0.0031	0.0002
NBP[1]95*	0.1967	0.0008	0.3207	0.0023	0.0197	0.0013
NBP[1]121*	0.2150	0.0008	0.3759	0.0027	0.0227	0.0014
NBP[1]147*	0.2517	0.0010	0.4844	0.0035	0.0288	0.0018
NBP[1]171*	0.4368	0.0017	0.9192	0.0066	0.0538	0.0034
NBP[1]195*	0.5145	0.0020	1.1554	0.0083	0.0668	0.0043
NBP[1]222*	0.3330	0.0013	0.8042	0.0058	0.0460	0.0029
NBP[1]248*	0.2380	0.0009	0.6181	0.0044	0.0349	0.0022
NBP[1]273*	0.1618	0.0006	0.4493	0.0032	0.0251	0.0016
NBP[1]299*	0.1047	0.0004	0.3099	0.0022	0.0171	0.0011
NBP[1]325*	0.0612	0.0002	0.1925	0.0014	0.0105	0.0007
NBP[1]351*	0.0393	0.0002	0.1314	0.0009	0.0071	0.0005
NBP[1]377*	0.0276	0.0001	0.0984	0.0007	0.0053	0.0003
NBP[1]402*	0.0192	0.0001	0.0730	0.0005	0.0039	0.0002
NBP[1]428*	0.0136	0.0001	0.0550	0.0004	0.0029	0.0002
NBP[1]454*	0.0099	0.0000	0.0428	0.0003	0.0022	0.0001
NBP[1]480*	0.0072	0.0000	0.0333	0.0002	0.0017	0.0001
NBP[1]505*	0.0049	0.0000	0.0243	0.0002	0.0012	0.0001
NBP[1]531*	0.0033	0.0000	0.0174	0.0001	0.0009	0.0001

* Specified by user.

Material Stream: 5 (continued)

Fluid Package: Basis-1
Property Package: Peng-Robinson

COMPOSITION

Vapour Phase (continued)

Phase Fraction 0.6644

COMPONENTS	MOLAR FLOW (kgmole/h)	MOLE FRACTION	MASS FLOW (tonne/d)	MASS FRACTION	LIQUID VOLUME FLOW (m3/h)	LIQUID VOLUME FRACTION
NBP[1]557*	0.0022	0.0000	0.0122	0.0001	0.0006	0.0000
NBP[1]582*	0.0014	0.0000	0.0084	0.0001	0.0004	0.0000
NBP[1]608*	0.0009	0.0000	0.0057	0.0000	0.0003	0.0000
NBP[1]634*	0.0006	0.0000	0.0039	0.0000	0.0002	0.0000
NBP[1]659*	0.0004	0.0000	0.0026	0.0000	0.0001	0.0000
NBP[1]685*	0.0002	0.0000	0.0018	0.0000	0.0001	0.0000
NBP[1]711*	0.0002	0.0000	0.0013	0.0000	0.0001	0.0000
NBP[1]736*	0.0001	0.0000	0.0008	0.0000	0.0000	0.0000
NBP[1]762*	0.0001	0.0000	0.0005	0.0000	0.0000	0.0000
NBP[1]788*	0.0000	0.0000	0.0003	0.0000	0.0000	0.0000
NBP[1]825*	0.0000	0.0000	0.0003	0.0000	0.0000	0.0000
NBP[1]873*	0.0000	0.0000	0.0001	0.0000	0.0000	0.0000
NBP[1]926*	0.0000	0.0000	0.0000	0.0000	0.0000	0.0000
NBP[1]978*	0.0000	0.0000	0.0000	0.0000	0.0000	0.0000
NBP[1]1021*	0.0000	0.0000	0.0000	0.0000	0.0000	0.0000
NBP[1]1075*	0.0000	0.0000	0.0000	0.0000	0.0000	0.0000
NBP[1]1123*	0.0000	0.0000	0.0000	0.0000	0.0000	0.0000
NBP[1]1173*	0.0000	0.0000	0.0000	0.0000	0.0000	0.0000
NBP[1]1250*	0.0000	0.0000	0.0000	0.0000	0.0000	0.0000
NBP[1]1339*	0.0000	0.0000	0.0000	0.0000	0.0000	0.0000
NBP[1]1432*	0.0000	0.0000	0.0000	0.0000	0.0000	0.0000
NBP[1]1528*	0.0000	0.0000	0.0000	0.0000	0.0000	0.0000
NBP[1]1637*	0.0022	0.0000	0.0525	0.0004	0.0021	0.0001
NBP[1]1732*	0.0101	0.0000	0.2565	0.0018	0.0101	0.0006
NBP[1]1819*	0.0097	0.0000	0.2590	0.0019	0.0101	0.0006
NBP[1]1913*	0.0112	0.0000	0.3148	0.0023	0.0121	0.0008
Total	260.5541	1.0000	139.1456	1.0000	15.7094	1.0000

Liquid Phase

Phase Fraction 6.374e-002

COMPONENTS	MOLAR FLOW (kgmole/h)	MOLE FRACTION	MASS FLOW (tonne/d)	MASS FRACTION	LIQUID VOLUME FLOW (m3/h)	LIQUID VOLUME FRACTION
Methane	9.4664	0.3787	3.6448	0.0698	0.5073	0.1596
Ethane	2.5781	0.1031	1.8606	0.0356	0.2180	0.0686
Propane	2.1695	0.0868	2.2960	0.0439	0.1888	0.0594
i-Butane	0.3928	0.0157	0.5480	0.0105	0.0406	0.0128
n-Butane	0.8679	0.0347	1.2107	0.0232	0.0865	0.0272
i-Pentane	0.2450	0.0098	0.4243	0.0081	0.0284	0.0089
n-Pentane	0.3048	0.0122	0.5279	0.0101	0.0349	0.0110
n-Hexane	0.6338	0.0254	1.3108	0.0251	0.0824	0.0259
Nitrogen	0.1633	0.0065	0.1098	0.0021	0.0057	0.0018
CO2	0.7597	0.0304	0.8024	0.0154	0.0405	0.0127
H2S	0.0001	0.0000	0.0001	0.0000	0.0000	0.0000
H2O	0.0162	0.0006	0.0070	0.0001	0.0003	0.0001
NBP[1]95*	0.0915	0.0037	0.1492	0.0029	0.0091	0.0029
NBP[1]121*	0.1231	0.0049	0.2153	0.0041	0.0130	0.0041
NBP[1]147*	0.1798	0.0072	0.3460	0.0066	0.0206	0.0065
NBP[1]171*	0.3856	0.0154	0.8114	0.0155	0.0475	0.0149
NBP[1]195*	0.5613	0.0225	1.2606	0.0241	0.0729	0.0229
NBP[1]222*	0.4674	0.0187	1.1289	0.0216	0.0645	0.0203
NBP[1]248*	0.4276	0.0171	1.1106	0.0213	0.0627	0.0197
NBP[1]273*	0.3741	0.0150	1.0389	0.0199	0.0580	0.0182
NBP[1]299*	0.3138	0.0126	0.9293	0.0178	0.0513	0.0161
NBP[1]325*	0.2417	0.0097	0.7602	0.0146	0.0416	0.0131
NBP[1]351*	0.2063	0.0083	0.6900	0.0132	0.0374	0.0118

* Specified by user.

Material Stream: 5 (continued)

Fluid Package: Basis-1
Property Package: Peng-Robinson

COMPOSITION

Liquid Phase (continued)

Phase Fraction 6.374e-002

COMPONENTS	MOLAR FLOW (kgmole/h)	MOLE FRACTION	MASS FLOW (tonne/d)	MASS FRACTION	LIQUID VOLUME FLOW (m3/h)	LIQUID VOLUME FRACTION
NBP[1]377*	0.1971	0.0079	0.7030	0.0135	0.0377	0.0118
NBP[1]402*	0.1869	0.0075	0.7108	0.0136	0.0377	0.0119
NBP[1]428*	0.1825	0.0073	0.7405	0.0142	0.0389	0.0122
NBP[1]454*	0.1857	0.0074	0.8052	0.0154	0.0419	0.0132
NBP[1]480*	0.1910	0.0076	0.8849	0.0169	0.0456	0.0143
NBP[1]505*	0.1871	0.0075	0.9240	0.0177	0.0471	0.0148
NBP[1]531*	0.1819	0.0073	0.9566	0.0183	0.0484	0.0152
NBP[1]557*	0.1762	0.0071	0.9856	0.0189	0.0494	0.0155
NBP[1]582*	0.1692	0.0068	1.0048	0.0192	0.0499	0.0157
NBP[1]608*	0.1634	0.0065	1.0294	0.0197	0.0507	0.0160
NBP[1]634*	0.1605	0.0064	1.0714	0.0205	0.0524	0.0165
NBP[1]659*	0.1582	0.0063	1.1168	0.0214	0.0542	0.0170
NBP[1]685*	0.1639	0.0066	1.2209	0.0234	0.0587	0.0185
NBP[1]711*	0.1714	0.0069	1.3432	0.0257	0.0641	0.0202
NBP[1]736*	0.1696	0.0068	1.3907	0.0266	0.0659	0.0207
NBP[1]762*	0.1652	0.0066	1.4209	0.0272	0.0668	0.0210
NBP[1]788*	0.1584	0.0063	1.4420	0.0276	0.0674	0.0212
NBP[1]825*	0.2654	0.0106	2.5960	0.0497	0.1201	0.0378
NBP[1]873*	0.1830	0.0073	1.9403	0.0371	0.0887	0.0279
NBP[1]926*	0.1437	0.0058	1.6471	0.0315	0.0744	0.0234
NBP[1]978*	0.1474	0.0059	1.8524	0.0355	0.0825	0.0260
NBP[1]1021*	0.0728	0.0029	0.9655	0.0185	0.0426	0.0134
NBP[1]1075*	0.0449	0.0018	0.6310	0.0121	0.0276	0.0087
NBP[1]1123*	0.0417	0.0017	0.6267	0.0120	0.0271	0.0085
NBP[1]1173*	0.0300	0.0012	0.4772	0.0091	0.0205	0.0064
NBP[1]1250*	0.0393	0.0016	0.6767	0.0130	0.0287	0.0090
NBP[1]1339*	0.0364	0.0015	0.6999	0.0134	0.0291	0.0092
NBP[1]1432*	0.0257	0.0010	0.5397	0.0103	0.0221	0.0070
NBP[1]1528*	0.0180	0.0007	0.4082	0.0078	0.0165	0.0052
NBP[1]1637*	0.0105	0.0004	0.2521	0.0048	0.0101	0.0032
NBP[1]1732*	0.0000	0.0000	0.0000	0.0000	0.0000	0.0000
NBP[1]1819*	0.0000	0.0000	0.0000	0.0000	0.0000	0.0000
NBP[1]1913*	0.0000	0.0000	0.0000	0.0000	0.0000	0.0000
Total	24.9971	1.0000	52.2467	1.0000	3.1788	1.0000

Aqueous Phase

Phase Fraction 0.2719

COMPONENTS	MOLAR FLOW (kgmole/h)	MOLE FRACTION	MASS FLOW (tonne/d)	MASS FRACTION	LIQUID VOLUME FLOW (m3/h)	LIQUID VOLUME FRACTION
Methane	0.0001	0.0000	0.0000	0.0000	0.0000	0.0000
Ethane	0.0000	0.0000	0.0000	0.0000	0.0000	0.0000
Propane	0.0000	0.0000	0.0000	0.0000	0.0000	0.0000
i-Butane	0.0000	0.0000	0.0000	0.0000	0.0000	0.0000
n-Butane	0.0000	0.0000	0.0000	0.0000	0.0000	0.0000
i-Pentane	0.0000	0.0000	0.0000	0.0000	0.0000	0.0000
n-Pentane	0.0000	0.0000	0.0000	0.0000	0.0000	0.0000
n-Hexane	0.0000	0.0000	0.0000	0.0000	0.0000	0.0000
Nitrogen	0.0040	0.0000	0.0027	0.0001	0.0001	0.0001
CO2	0.0978	0.0009	0.1033	0.0022	0.0052	0.0027
H2S	0.0000	0.0000	0.0000	0.0000	0.0000	0.0000
H2O	106.5092	0.9990	46.0506	0.9977	1.9226	0.9972
NBP[1]95*	0.0000	0.0000	0.0000	0.0000	0.0000	0.0000
NBP[1]121*	0.0000	0.0000	0.0000	0.0000	0.0000	0.0000
NBP[1]147*	0.0000	0.0000	0.0000	0.0000	0.0000	0.0000
NBP[1]171*	0.0000	0.0000	0.0000	0.0000	0.0000	0.0000

* Specified by user.

Material Stream: 5 (continued)

Fluid Package: Basis-1
Property Package: Peng-Robinson

COMPOSITION

Aqueous Phase (continued)

Phase Fraction 0.2719

COMPONENTS	MOLAR FLOW (kgmole/h)	MOLE FRACTION	MASS FLOW (tonne/d)	MASS FRACTION	LIQUID VOLUME FLOW (m3/h)	LIQUID VOLUME FRACTION
NBP[1]195*	0.0000	0.0000	0.0000	0.0000	0.0000	0.0000
NBP[1]222*	0.0000	0.0000	0.0000	0.0000	0.0000	0.0000
NBP[1]248*	0.0000	0.0000	0.0000	0.0000	0.0000	0.0000
NBP[1]273*	0.0000	0.0000	0.0000	0.0000	0.0000	0.0000
NBP[1]299*	0.0000	0.0000	0.0000	0.0000	0.0000	0.0000
NBP[1]325*	0.0000	0.0000	0.0000	0.0000	0.0000	0.0000
NBP[1]351*	0.0000	0.0000	0.0000	0.0000	0.0000	0.0000
NBP[1]377*	0.0000	0.0000	0.0000	0.0000	0.0000	0.0000
NBP[1]402*	0.0000	0.0000	0.0000	0.0000	0.0000	0.0000
NBP[1]428*	0.0000	0.0000	0.0000	0.0000	0.0000	0.0000
NBP[1]454*	0.0000	0.0000	0.0000	0.0000	0.0000	0.0000
NBP[1]480*	0.0000	0.0000	0.0000	0.0000	0.0000	0.0000
NBP[1]505*	0.0000	0.0000	0.0000	0.0000	0.0000	0.0000
NBP[1]531*	0.0000	0.0000	0.0000	0.0000	0.0000	0.0000
NBP[1]557*	0.0000	0.0000	0.0000	0.0000	0.0000	0.0000
NBP[1]582*	0.0000	0.0000	0.0000	0.0000	0.0000	0.0000
NBP[1]608*	0.0000	0.0000	0.0000	0.0000	0.0000	0.0000
NBP[1]634*	0.0000	0.0000	0.0000	0.0000	0.0000	0.0000
NBP[1]659*	0.0000	0.0000	0.0000	0.0000	0.0000	0.0000
NBP[1]685*	0.0000	0.0000	0.0000	0.0000	0.0000	0.0000
NBP[1]711*	0.0000	0.0000	0.0000	0.0000	0.0000	0.0000
NBP[1]736*	0.0000	0.0000	0.0000	0.0000	0.0000	0.0000
NBP[1]762*	0.0000	0.0000	0.0000	0.0000	0.0000	0.0000
NBP[1]788*	0.0000	0.0000	0.0000	0.0000	0.0000	0.0000
NBP[1]825*	0.0000	0.0000	0.0000	0.0000	0.0000	0.0000
NBP[1]873*	0.0000	0.0000	0.0000	0.0000	0.0000	0.0000
NBP[1]926*	0.0000	0.0000	0.0000	0.0000	0.0000	0.0000
NBP[1]978*	0.0000	0.0000	0.0000	0.0000	0.0000	0.0000
NBP[1]1021*	0.0000	0.0000	0.0000	0.0000	0.0000	0.0000
NBP[1]1075*	0.0000	0.0000	0.0000	0.0000	0.0000	0.0000
NBP[1]1123*	0.0000	0.0000	0.0000	0.0000	0.0000	0.0000
NBP[1]1173*	0.0000	0.0000	0.0000	0.0000	0.0000	0.0000
NBP[1]1250*	0.0000	0.0000	0.0000	0.0000	0.0000	0.0000
NBP[1]1339*	0.0000	0.0000	0.0000	0.0000	0.0000	0.0000
NBP[1]1432*	0.0000	0.0000	0.0000	0.0000	0.0000	0.0000
NBP[1]1528*	0.0000	0.0000	0.0000	0.0000	0.0000	0.0000
NBP[1]1637*	0.0000	0.0000	0.0000	0.0000	0.0000	0.0000
NBP[1]1732*	0.0000	0.0000	0.0000	0.0000	0.0000	0.0000
NBP[1]1819*	0.0000	0.0000	0.0000	0.0000	0.0000	0.0000
NBP[1]1913*	0.0000	0.0000	0.0000	0.0000	0.0000	0.0000
Total	106.6110	1.0000	46.1566	1.0000	1.9280	1.0000

Material Stream: 6

Fluid Package: Basis-1
Property Package: Peng-Robinson

CONDITIONS

		Overall	Vapour Phase	Liquid Phase	Aqueous Phase
Vapour / Phase Fraction		0.6693	0.6693	0.0591	0.2716
Temperature:	(F)	105.0 *	105.0	105.0	105.0
Pressure:	(psig)	2090	2090	2090	2090
Molar Flow	(MMSCFD)	7.874	5.270	0.4654	2.138
Mass Flow	(tonne/d)	237.5	140.6	50.84	46.11
Std Ideal Liq Vol Flow	(barrel/day)	3142	2391	460.2	290.7
Molar Enthalpy	(kJ/kgmole)	-1.527e+005	-9.272e+004	-2.243e+005	-2.849e+005

* Specified by user.

Material Stream: 6 (continued)

Fluid Package: Basis-1
Property Package: Peng-Robinson

CONDITIONS

	Overall	Vapour Phase	Liquid Phase	Aqueous Phase
Molar Entropy (kJ/kgmole-C)	122.8	141.7	208.3	57.54
Heat Flow (MMBtu/hr)	-56.75	-23.07	-4.928	-28.76
Liq Vol Flow @Std Cond (barrel/day)	2.954e+005 *	9.328e+005	441.5	285.7

PROPERTIES

	Overall	Vapour Phase	Liquid Phase	Aqueous Phase
Molecular Weight	25.24	22.32	91.38	18.04
Molar Density (kgmole/m3)	10.34	7.952	7.690	55.46
Mass Density (kg/m3)	260.9	177.5	702.7	1000
Act. Volume Flow (barrel/day)	5728	4983	455.0	289.9
Mass Enthalpy (kJ/kg)	-6049	-4154	-2455	-1.579e+004
Mass Entropy (kJ/kg-C)	4.864	6.347	2.279	3.190
Heat Capacity (kJ/kgmole-C)	81.84	73.70	194.3	77.43
Mass Heat Capacity (kJ/kg-C)	3.243	3.302	2.127	4.293
LHV Molar Basis (Std) (Btu/SCF)	---	---	---	9.889e-004
LHV Mass Basis (Std) (kJ/kg)	---	---	---	4.839e-002
Phase Fraction [Vol. Basis]	0.7610	0.7610	0.1464	9.251e-002
Phase Fraction [Mass Basis]	0.5919	0.5919	0.2140	0.1941
Partial Pressure of CO2 (psig)	54.66	---	---	---
Cost Based on Flow (Cost/s)	0.0000	0.0000	0.0000	0.0000
Act. Gas Flow (ACT_m3/h)	33.01	33.01	---	---
Avg. Liq. Density (kgmole/m3)	18.84	16.57	7.605	55.31
Specific Heat (kJ/kgmole-C)	81.84	73.70	194.3	77.43
Std. Gas Flow (STD_m3/h)	9272	6206	548.1	2518
Std. Ideal Liq. Mass Density (kg/m3)	475.5	369.8	694.9	997.6
Act. Liq. Flow (barrel/day)	744.9	---	455.0	289.9
Z Factor	---	0.6997	0.7235	0.1003
Watson K	15.58	16.97	12.21	8.472
User Property	---	---	---	---
Partial Pressure of H2S (psig)	-14.69	---	---	---
Cp/(Cp - R)	1.113	1.127	1.045	1.120
Cp/Cv	1.435	1.919	1.280	1.152
Heat of Vap. (kJ/kgmole)	6.038e+004	---	---	---
Kinematic Viscosity (cSt)	---	0.1151	2.090	0.6444
Liq. Mass Density (Std. Cond) (kg/m3)	5.058	0.9481	724.3	1015
Liq. Vol. Flow (Std. Cond) (barrel/day)	2.954e+005	9.328e+005	441.5	285.7
Liquid Fraction	0.3307	0.0000	1.000	1.000
Molar Volume (m3/kgmole)	9.675e-002	0.1258	0.1300	1.803e-002
Mass Heat of Vap. (kJ/kg)	2392	---	---	---
Phase Fraction [Molar Basis]	0.6693	0.6693	0.0591	0.2716
Surface Tension (dyne/cm)	---	---	9.330	69.34
Thermal Conductivity (W/m-K)	---	5.521e-002	8.535e-002	0.6322
Viscosity (cP)	---	2.043e-002	1.469	0.6446
Cv (Semi-Ideal) (kJ/kgmole-C)	73.53	65.38	186.0	69.12
Mass Cv (Semi-Ideal) (kJ/kg-C)	2.913	2.929	2.036	3.832
Cv (kJ/kgmole-C)	57.05	38.40	151.9	67.19
Mass Cv (kJ/kg-C)	2.260	1.720	1.662	3.725
Cv (Ent. Method) (kJ/kgmole-C)	---	37.84	---	66.40
Mass Cv (Ent. Method) (kJ/kg-C)	---	1.695	---	3.681
Cp/Cv (Ent. Method)	---	1.947	---	1.166
Reid VP at 37.8 C (psig)	3319	2401	369.1	---
True VP at 37.8 C (psig)	6318	2875	2053	380.5
Liq. Vol. Flow - Sum(Std. Cond) (barrel/day)	9.335e+005	9.328e+005	441.5	285.7
HHV Molar Basis (Std) (Btu/SCF)	---	---	---	46.43
HHV Mass Basis (Std) (kJ/kg)	---	---	---	2272
CO2 Loading	---	---	---	---
CO2 App ML Con (kgmole/m3)	---	---	0.2248	4.588e-002

* Specified by user.

Material Stream: 6 (continued)

Fluid Package: Basis-1
Property Package: Peng-Robinson

PROPERTIES

	Overall	Vapour Phase	Liquid Phase	Aqueous Phase
CO2 App WT Con (kgmol/kg)	---	---	3.200e-004	4.587e-005
Phase Fraction [Act. Vol. Basis]	0.8699	0.8699	7.945e-002	5.061e-002
Mass Exergy (kJ/kg)	318.7	---	---	---
Viscosity Index	-38.22	---	---	---
Ideal Gas Cp/Cv	1.212	1.234	1.058	1.328
Ideal Gas Cp (kJ/kgmole-C)	47.49	43.89	151.7	33.67
Mass Ideal Gas Cp (kJ/kg-C)	1.882	1.966	1.661	1.867
Bubble Point Pressure (psig)	6321	---	---	---

COMPOSITION

Overall Phase

Vapour Fraction 0.6693

COMPONENTS	MOLAR FLOW (kgmole/h)	MOLE FRACTION	MASS FLOW (tonne/d)	MASS FRACTION	LIQUID VOLUME FLOW (m3/h)	LIQUID VOLUME FRACTION
Methane	207.0440	0.5280	79.7181	0.3356	11.0944	0.5330
Ethane	28.8006	0.0734	20.7848	0.0875	2.4348	0.1170
Propane	15.2677	0.0389	16.1583	0.0680	1.3288	0.0638
i-Butane	2.0287	0.0052	2.8300	0.0119	0.2098	0.0101
n-Butane	3.9513	0.0101	5.5120	0.0232	0.3938	0.0189
i-Pentane	0.8495	0.0022	1.4710	0.0062	0.0983	0.0047
n-Pentane	0.9602	0.0024	1.6627	0.0070	0.1100	0.0053
n-Hexane	1.4698	0.0037	3.0399	0.0128	0.1911	0.0092
Nitrogen	5.5989	0.0143	3.7642	0.0158	0.1945	0.0093
CO2	9.4151	0.0240	9.9445	0.0419	0.5020	0.0241
H2S	0.0006	0.0000	0.0005	0.0000	0.0000	0.0000
H2O	106.6990	0.2721	46.1326	0.1942	1.9261	0.0925
NBP[1]95*	0.2883	0.0007	0.4699	0.0020	0.0288	0.0014
NBP[1]121*	0.3381	0.0009	0.5912	0.0025	0.0358	0.0017
NBP[1]147*	0.4314	0.0011	0.8304	0.0035	0.0494	0.0024
NBP[1]171*	0.8224	0.0021	1.7306	0.0073	0.1013	0.0049
NBP[1]195*	1.0758	0.0027	2.4160	0.0102	0.1398	0.0067
NBP[1]222*	0.8003	0.0020	1.9331	0.0081	0.1105	0.0053
NBP[1]248*	0.6657	0.0017	1.7287	0.0073	0.0976	0.0047
NBP[1]273*	0.5358	0.0014	1.4881	0.0063	0.0831	0.0040
NBP[1]299*	0.4185	0.0011	1.2393	0.0052	0.0684	0.0033
NBP[1]325*	0.3029	0.0008	0.9528	0.0040	0.0521	0.0025
NBP[1]351*	0.2456	0.0006	0.8214	0.0035	0.0445	0.0021
NBP[1]377*	0.2247	0.0006	0.8014	0.0034	0.0429	0.0021
NBP[1]402*	0.2061	0.0005	0.7838	0.0033	0.0416	0.0020
NBP[1]428*	0.1961	0.0005	0.7956	0.0033	0.0418	0.0020
NBP[1]454*	0.1956	0.0005	0.8480	0.0036	0.0441	0.0021
NBP[1]480*	0.1982	0.0005	0.9182	0.0039	0.0473	0.0023
NBP[1]505*	0.1920	0.0005	0.9484	0.0040	0.0484	0.0023
NBP[1]531*	0.1852	0.0005	0.9740	0.0041	0.0492	0.0024
NBP[1]557*	0.1784	0.0005	0.9978	0.0042	0.0500	0.0024
NBP[1]582*	0.1706	0.0004	1.0132	0.0043	0.0503	0.0024
NBP[1]608*	0.1643	0.0004	1.0351	0.0044	0.0510	0.0025
NBP[1]634*	0.1611	0.0004	1.0753	0.0045	0.0526	0.0025
NBP[1]659*	0.1586	0.0004	1.1194	0.0047	0.0543	0.0026
NBP[1]685*	0.1641	0.0004	1.2227	0.0051	0.0588	0.0028
NBP[1]711*	0.1715	0.0004	1.3445	0.0057	0.0642	0.0031
NBP[1]736*	0.1697	0.0004	1.3915	0.0059	0.0659	0.0032
NBP[1]762*	0.1653	0.0004	1.4214	0.0060	0.0669	0.0032
NBP[1]788*	0.1585	0.0004	1.4424	0.0061	0.0674	0.0032
NBP[1]825*	0.2655	0.0007	2.5963	0.0109	0.1201	0.0058
NBP[1]873*	0.1830	0.0005	1.9404	0.0082	0.0887	0.0043
NBP[1]926*	0.1437	0.0004	1.6472	0.0069	0.0744	0.0036

* Specified by user.

Material Stream: 6 (continued)

Fluid Package: Basis-1
Property Package: Peng-Robinson

COMPOSITION

Overall Phase (continued)

Vapour Fraction 0.6693

COMPONENTS	MOLAR FLOW (kgmole/h)	MOLE FRACTION	MASS FLOW (tonne/d)	MASS FRACTION	LIQUID VOLUME FLOW (m3/h)	LIQUID VOLUME FRACTION
NBP[1]978*	0.1474	0.0004	1.8524	0.0078	0.0825	0.0040
NBP[1]1021*	0.0728	0.0002	0.9655	0.0041	0.0426	0.0020
NBP[1]1075*	0.0449	0.0001	0.6310	0.0027	0.0276	0.0013
NBP[1]1123*	0.0417	0.0001	0.6267	0.0026	0.0271	0.0013
NBP[1]1173*	0.0300	0.0001	0.4772	0.0020	0.0205	0.0010
NBP[1]1250*	0.0393	0.0001	0.6767	0.0028	0.0287	0.0014
NBP[1]1339*	0.0364	0.0001	0.6999	0.0029	0.0291	0.0014
NBP[1]1432*	0.0257	0.0001	0.5397	0.0023	0.0221	0.0011
NBP[1]1528*	0.0180	0.0000	0.4082	0.0017	0.0165	0.0008
NBP[1]1637*	0.0127	0.0000	0.3047	0.0013	0.0122	0.0006
NBP[1]1732*	0.0101	0.0000	0.2565	0.0011	0.0101	0.0005
NBP[1]1819*	0.0097	0.0000	0.2590	0.0011	0.0101	0.0005
NBP[1]1913*	0.0112	0.0000	0.3148	0.0013	0.0121	0.0006
Total	392.1623	1.0000	237.5489	1.0000	20.8162	1.0000

Vapour Phase

Phase Fraction 0.6693

COMPONENTS	MOLAR FLOW (kgmole/h)	MOLE FRACTION	MASS FLOW (tonne/d)	MASS FRACTION	LIQUID VOLUME FLOW (m3/h)	LIQUID VOLUME FRACTION
Methane	198.5586	0.7565	76.4509	0.5437	10.6397	0.6716
Ethane	26.4727	0.1009	19.1048	0.1359	2.2380	0.1413
Propane	13.2904	0.0506	14.0656	0.1000	1.1567	0.0730
i-Butane	1.6672	0.0064	2.3257	0.0165	0.1724	0.0109
n-Butane	3.1512	0.0120	4.3958	0.0313	0.3140	0.0198
i-Pentane	0.6210	0.0024	1.0753	0.0076	0.0719	0.0045
n-Pentane	0.6756	0.0026	1.1699	0.0083	0.0774	0.0049
n-Hexane	0.8700	0.0033	1.7994	0.0128	0.1131	0.0071
Nitrogen	5.4494	0.0208	3.6637	0.0261	0.1893	0.0119
CO2	8.6492	0.0330	9.1356	0.0650	0.4612	0.0291
H2S	0.0005	0.0000	0.0004	0.0000	0.0000	0.0000
H2O	0.2615	0.0010	0.1131	0.0008	0.0047	0.0003
NBP[1]95*	0.2026	0.0008	0.3303	0.0023	0.0202	0.0013
NBP[1]121*	0.2224	0.0008	0.3889	0.0028	0.0235	0.0015
NBP[1]147*	0.2617	0.0010	0.5037	0.0036	0.0300	0.0019
NBP[1]171*	0.4563	0.0017	0.9601	0.0068	0.0562	0.0035
NBP[1]195*	0.5397	0.0021	1.2121	0.0086	0.0701	0.0044
NBP[1]222*	0.3510	0.0013	0.8477	0.0060	0.0484	0.0031
NBP[1]248*	0.2519	0.0010	0.6543	0.0047	0.0369	0.0023
NBP[1]273*	0.1719	0.0007	0.4773	0.0034	0.0266	0.0017
NBP[1]299*	0.1115	0.0004	0.3303	0.0023	0.0182	0.0012
NBP[1]325*	0.0654	0.0002	0.2057	0.0015	0.0112	0.0007
NBP[1]351*	0.0420	0.0002	0.1406	0.0010	0.0076	0.0005
NBP[1]377*	0.0296	0.0001	0.1054	0.0007	0.0056	0.0004
NBP[1]402*	0.0206	0.0001	0.0783	0.0006	0.0042	0.0003
NBP[1]428*	0.0145	0.0001	0.0590	0.0004	0.0031	0.0002
NBP[1]454*	0.0106	0.0000	0.0458	0.0003	0.0024	0.0002
NBP[1]480*	0.0077	0.0000	0.0356	0.0003	0.0018	0.0001
NBP[1]505*	0.0053	0.0000	0.0260	0.0002	0.0013	0.0001
NBP[1]531*	0.0035	0.0000	0.0185	0.0001	0.0009	0.0001
NBP[1]557*	0.0023	0.0000	0.0130	0.0001	0.0006	0.0000
NBP[1]582*	0.0015	0.0000	0.0089	0.0001	0.0004	0.0000
NBP[1]608*	0.0010	0.0000	0.0060	0.0000	0.0003	0.0000
NBP[1]634*	0.0006	0.0000	0.0041	0.0000	0.0002	0.0000
NBP[1]659*	0.0004	0.0000	0.0027	0.0000	0.0001	0.0000
NBP[1]685*	0.0003	0.0000	0.0019	0.0000	0.0001	0.0000

* Specified by user.

Material Stream: 6 (continued)

Fluid Package: Basis-1
Property Package: Peng-Robinson

COMPOSITION

Vapour Phase (continued)

Phase Fraction 0.6693

COMPONENTS	MOLAR FLOW (kgmole/h)	MOLE FRACTION	MASS FLOW (tonne/d)	MASS FRACTION	LIQUID VOLUME FLOW (m3/h)	LIQUID VOLUME FRACTION
NBP[1]711*	0.0002	0.0000	0.0013	0.0000	0.0001	0.0000
NBP[1]736*	0.0001	0.0000	0.0009	0.0000	0.0000	0.0000
NBP[1]762*	0.0001	0.0000	0.0005	0.0000	0.0000	0.0000
NBP[1]788*	0.0000	0.0000	0.0003	0.0000	0.0000	0.0000
NBP[1]825*	0.0000	0.0000	0.0003	0.0000	0.0000	0.0000
NBP[1]873*	0.0000	0.0000	0.0001	0.0000	0.0000	0.0000
NBP[1]926*	0.0000	0.0000	0.0000	0.0000	0.0000	0.0000
NBP[1]978*	0.0000	0.0000	0.0000	0.0000	0.0000	0.0000
NBP[1]1021*	0.0000	0.0000	0.0000	0.0000	0.0000	0.0000
NBP[1]1075*	0.0000	0.0000	0.0000	0.0000	0.0000	0.0000
NBP[1]1123*	0.0000	0.0000	0.0000	0.0000	0.0000	0.0000
NBP[1]1173*	0.0000	0.0000	0.0000	0.0000	0.0000	0.0000
NBP[1]1250*	0.0000	0.0000	0.0000	0.0000	0.0000	0.0000
NBP[1]1339*	0.0000	0.0000	0.0000	0.0000	0.0000	0.0000
NBP[1]1432*	0.0000	0.0000	0.0000	0.0000	0.0000	0.0000
NBP[1]1528*	0.0000	0.0000	0.0000	0.0000	0.0000	0.0000
NBP[1]1637*	0.0007	0.0000	0.0157	0.0001	0.0006	0.0000
NBP[1]1732*	0.0101	0.0000	0.2564	0.0018	0.0101	0.0006
NBP[1]1819*	0.0097	0.0000	0.2590	0.0018	0.0101	0.0006
NBP[1]1913*	0.0112	0.0000	0.3148	0.0022	0.0121	0.0008
Total	262.4735	1.0000	140.6055	1.0000	15.8421	1.0000

Liquid Phase

Phase Fraction 5.911e-002

COMPONENTS	MOLAR FLOW (kgmole/h)	MOLE FRACTION	MASS FLOW (tonne/d)	MASS FRACTION	LIQUID VOLUME FLOW (m3/h)	LIQUID VOLUME FRACTION
Methane	8.4853	0.3660	3.2671	0.0643	0.4547	0.1492
Ethane	2.3279	0.1004	1.6800	0.0330	0.1968	0.0646
Propane	1.9774	0.0853	2.0927	0.0412	0.1721	0.0565
i-Butane	0.3615	0.0156	0.5043	0.0099	0.0374	0.0123
n-Butane	0.8001	0.0345	1.1161	0.0220	0.0797	0.0262
i-Pentane	0.2285	0.0099	0.3957	0.0078	0.0264	0.0087
n-Pentane	0.2846	0.0123	0.4928	0.0097	0.0326	0.0107
n-Hexane	0.5998	0.0259	1.2406	0.0244	0.0780	0.0256
Nitrogen	0.1459	0.0063	0.0981	0.0019	0.0051	0.0017
CO2	0.6778	0.0292	0.7159	0.0141	0.0361	0.0119
H2S	0.0001	0.0000	0.0001	0.0000	0.0000	0.0000
H2O	0.0217	0.0009	0.0094	0.0002	0.0004	0.0001
NBP[1]95*	0.0856	0.0037	0.1396	0.0027	0.0086	0.0028
NBP[1]121*	0.1157	0.0050	0.2023	0.0040	0.0122	0.0040
NBP[1]147*	0.1698	0.0073	0.3267	0.0064	0.0194	0.0064
NBP[1]171*	0.3662	0.0158	0.7705	0.0152	0.0451	0.0148
NBP[1]195*	0.5360	0.0231	1.2038	0.0237	0.0697	0.0229
NBP[1]222*	0.4494	0.0194	1.0854	0.0214	0.0620	0.0204
NBP[1]248*	0.4137	0.0178	1.0745	0.0211	0.0607	0.0199
NBP[1]273*	0.3640	0.0157	1.0108	0.0199	0.0564	0.0185
NBP[1]299*	0.3070	0.0132	0.9090	0.0179	0.0502	0.0165
NBP[1]325*	0.2375	0.0102	0.7471	0.0147	0.0408	0.0134
NBP[1]351*	0.2036	0.0088	0.6809	0.0134	0.0369	0.0121
NBP[1]377*	0.1952	0.0084	0.6960	0.0137	0.0373	0.0122
NBP[1]402*	0.1855	0.0080	0.7056	0.0139	0.0374	0.0123
NBP[1]428*	0.1815	0.0078	0.7366	0.0145	0.0387	0.0127
NBP[1]454*	0.1850	0.0080	0.8022	0.0158	0.0417	0.0137
NBP[1]480*	0.1905	0.0082	0.8826	0.0174	0.0454	0.0149
NBP[1]505*	0.1867	0.0081	0.9224	0.0181	0.0470	0.0154

* Specified by user.

Material Stream: 6 (continued)

Fluid Package: Basis-1
Property Package: Peng-Robinson

COMPOSITION

Liquid Phase (continued)

Phase Fraction 5.911e-002

COMPONENTS	MOLAR FLOW (kgmole/h)	MOLE FRACTION	MASS FLOW (tonne/d)	MASS FRACTION	LIQUID VOLUME FLOW (m3/h)	LIQUID VOLUME FRACTION
NBP[1]531*	0.1817	0.0078	0.9555	0.0188	0.0483	0.0158
NBP[1]557*	0.1761	0.0076	0.9849	0.0194	0.0494	0.0162
NBP[1]582*	0.1691	0.0073	1.0043	0.0198	0.0499	0.0164
NBP[1]608*	0.1633	0.0070	1.0291	0.0202	0.0507	0.0166
NBP[1]634*	0.1605	0.0069	1.0712	0.0211	0.0524	0.0172
NBP[1]659*	0.1582	0.0068	1.1167	0.0220	0.0541	0.0178
NBP[1]685*	0.1639	0.0071	1.2208	0.0240	0.0587	0.0193
NBP[1]711*	0.1714	0.0074	1.3432	0.0264	0.0641	0.0210
NBP[1]736*	0.1696	0.0073	1.3907	0.0274	0.0659	0.0216
NBP[1]762*	0.1652	0.0071	1.4209	0.0279	0.0668	0.0219
NBP[1]788*	0.1584	0.0068	1.4420	0.0284	0.0674	0.0221
NBP[1]825*	0.2654	0.0114	2.5960	0.0511	0.1201	0.0394
NBP[1]873*	0.1830	0.0079	1.9403	0.0382	0.0887	0.0291
NBP[1]926*	0.1437	0.0062	1.6471	0.0324	0.0744	0.0244
NBP[1]978*	0.1474	0.0064	1.8524	0.0364	0.0825	0.0271
NBP[1]1021*	0.0728	0.0031	0.9655	0.0190	0.0426	0.0140
NBP[1]1075*	0.0449	0.0019	0.6310	0.0124	0.0276	0.0091
NBP[1]1123*	0.0417	0.0018	0.6267	0.0123	0.0271	0.0089
NBP[1]1173*	0.0300	0.0013	0.4772	0.0094	0.0205	0.0067
NBP[1]1250*	0.0393	0.0017	0.6767	0.0133	0.0287	0.0094
NBP[1]1339*	0.0364	0.0016	0.6999	0.0138	0.0291	0.0096
NBP[1]1432*	0.0257	0.0011	0.5397	0.0106	0.0221	0.0073
NBP[1]1528*	0.0180	0.0008	0.4082	0.0080	0.0165	0.0054
NBP[1]1637*	0.0120	0.0005	0.2890	0.0057	0.0116	0.0038
NBP[1]1732*	0.0000	0.0000	0.0001	0.0000	0.0000	0.0000
NBP[1]1819*	0.0000	0.0000	0.0000	0.0000	0.0000	0.0000
NBP[1]1913*	0.0000	0.0000	0.0000	0.0000	0.0000	0.0000
Total	23.1813	1.0000	50.8377	1.0000	3.0483	1.0000

Aqueous Phase

Phase Fraction 0.2716

COMPONENTS	MOLAR FLOW (kgmole/h)	MOLE FRACTION	MASS FLOW (tonne/d)	MASS FRACTION	LIQUID VOLUME FLOW (m3/h)	LIQUID VOLUME FRACTION
Methane	0.0001	0.0000	0.0000	0.0000	0.0000	0.0000
Ethane	0.0000	0.0000	0.0000	0.0000	0.0000	0.0000
Propane	0.0000	0.0000	0.0000	0.0000	0.0000	0.0000
i-Butane	0.0000	0.0000	0.0000	0.0000	0.0000	0.0000
n-Butane	0.0000	0.0000	0.0000	0.0000	0.0000	0.0000
i-Pentane	0.0000	0.0000	0.0000	0.0000	0.0000	0.0000
n-Pentane	0.0000	0.0000	0.0000	0.0000	0.0000	0.0000
n-Hexane	0.0000	0.0000	0.0000	0.0000	0.0000	0.0000
Nitrogen	0.0035	0.0000	0.0024	0.0001	0.0001	0.0001
CO2	0.0881	0.0008	0.0931	0.0020	0.0047	0.0024
H2S	0.0000	0.0000	0.0000	0.0000	0.0000	0.0000
H2O	106.4157	0.9991	46.0102	0.9979	1.9210	0.9975
NBP[1]95*	0.0000	0.0000	0.0000	0.0000	0.0000	0.0000
NBP[1]121*	0.0000	0.0000	0.0000	0.0000	0.0000	0.0000
NBP[1]147*	0.0000	0.0000	0.0000	0.0000	0.0000	0.0000
NBP[1]171*	0.0000	0.0000	0.0000	0.0000	0.0000	0.0000
NBP[1]195*	0.0000	0.0000	0.0000	0.0000	0.0000	0.0000
NBP[1]222*	0.0000	0.0000	0.0000	0.0000	0.0000	0.0000
NBP[1]248*	0.0000	0.0000	0.0000	0.0000	0.0000	0.0000
NBP[1]273*	0.0000	0.0000	0.0000	0.0000	0.0000	0.0000
NBP[1]299*	0.0000	0.0000	0.0000	0.0000	0.0000	0.0000
NBP[1]325*	0.0000	0.0000	0.0000	0.0000	0.0000	0.0000

* Specified by user.

Material Stream: 6 (continued)

Fluid Package: Basis-1
Property Package: Peng-Robinson

COMPOSITION

Aqueous Phase (continued)

Phase Fraction 0.2716

COMPONENTS	MOLAR FLOW (kgmole/h)	MOLE FRACTION	MASS FLOW (tonne/d)	MASS FRACTION	LIQUID VOLUME FLOW (m3/h)	LIQUID VOLUME FRACTION
NBP[1]351*	0.0000	0.0000	0.0000	0.0000	0.0000	0.0000
NBP[1]377*	0.0000	0.0000	0.0000	0.0000	0.0000	0.0000
NBP[1]402*	0.0000	0.0000	0.0000	0.0000	0.0000	0.0000
NBP[1]428*	0.0000	0.0000	0.0000	0.0000	0.0000	0.0000
NBP[1]454*	0.0000	0.0000	0.0000	0.0000	0.0000	0.0000
NBP[1]480*	0.0000	0.0000	0.0000	0.0000	0.0000	0.0000
NBP[1]505*	0.0000	0.0000	0.0000	0.0000	0.0000	0.0000
NBP[1]531*	0.0000	0.0000	0.0000	0.0000	0.0000	0.0000
NBP[1]557*	0.0000	0.0000	0.0000	0.0000	0.0000	0.0000
NBP[1]582*	0.0000	0.0000	0.0000	0.0000	0.0000	0.0000
NBP[1]608*	0.0000	0.0000	0.0000	0.0000	0.0000	0.0000
NBP[1]634*	0.0000	0.0000	0.0000	0.0000	0.0000	0.0000
NBP[1]659*	0.0000	0.0000	0.0000	0.0000	0.0000	0.0000
NBP[1]685*	0.0000	0.0000	0.0000	0.0000	0.0000	0.0000
NBP[1]711*	0.0000	0.0000	0.0000	0.0000	0.0000	0.0000
NBP[1]736*	0.0000	0.0000	0.0000	0.0000	0.0000	0.0000
NBP[1]762*	0.0000	0.0000	0.0000	0.0000	0.0000	0.0000
NBP[1]788*	0.0000	0.0000	0.0000	0.0000	0.0000	0.0000
NBP[1]825*	0.0000	0.0000	0.0000	0.0000	0.0000	0.0000
NBP[1]873*	0.0000	0.0000	0.0000	0.0000	0.0000	0.0000
NBP[1]926*	0.0000	0.0000	0.0000	0.0000	0.0000	0.0000
NBP[1]978*	0.0000	0.0000	0.0000	0.0000	0.0000	0.0000
NBP[1]1021*	0.0000	0.0000	0.0000	0.0000	0.0000	0.0000
NBP[1]1075*	0.0000	0.0000	0.0000	0.0000	0.0000	0.0000
NBP[1]1123*	0.0000	0.0000	0.0000	0.0000	0.0000	0.0000
NBP[1]1173*	0.0000	0.0000	0.0000	0.0000	0.0000	0.0000
NBP[1]1250*	0.0000	0.0000	0.0000	0.0000	0.0000	0.0000
NBP[1]1339*	0.0000	0.0000	0.0000	0.0000	0.0000	0.0000
NBP[1]1432*	0.0000	0.0000	0.0000	0.0000	0.0000	0.0000
NBP[1]1528*	0.0000	0.0000	0.0000	0.0000	0.0000	0.0000
NBP[1]1637*	0.0000	0.0000	0.0000	0.0000	0.0000	0.0000
NBP[1]1732*	0.0000	0.0000	0.0000	0.0000	0.0000	0.0000
NBP[1]1819*	0.0000	0.0000	0.0000	0.0000	0.0000	0.0000
NBP[1]1913*	0.0000	0.0000	0.0000	0.0000	0.0000	0.0000
Total	106.5074	1.0000	46.1056	1.0000	1.9258	1.0000

Material Stream: 7

Fluid Package: Basis-1
Property Package: Peng-Robinson

CONDITIONS

		Overall	Vapour Phase	Liquid Phase	Aqueous Phase
Vapour / Phase Fraction		0.6588	0.6588	0.0695	0.2717
Temperature:	(F)	88.76	88.76	88.76	88.76
Pressure:	(psig)	1323 *	1323	1323	1323
Molar Flow	(MMSCFD)	7.874	5.187	0.5469	2.140
Mass Flow	(tonne/d)	237.5	132.8	58.65	46.13
Std Ideal Liq Vol Flow	(barrel/day)	3142	2316	535.8	290.8
Molar Enthalpy	(kJ/kgmole)	-1.527e+005	-9.067e+004	-2.206e+005	-2.856e+005
Molar Entropy	(kJ/kgmole-C)	124.8	146.7	188.9	55.35
Heat Flow	(MMBtu/hr)	-56.75	-22.20	-5.694	-28.85
Liq Vol Flow @Std Cond	(barrel/day)	2.954e+005 *	9.185e+005	513.2	285.8

* Specified by user.

Material Stream: 7 (continued)

Fluid Package: Basis-1
Property Package: Peng-Robinson

PROPERTIES

	Overall	Vapour Phase	Liquid Phase	Aqueous Phase
Molecular Weight	25.24	21.41	89.72	18.04
Molar Density (kgmole/m3)	6.758	4.908	7.823	55.75
Mass Density (kg/m3)	170.6	105.1	701.8	1005
Act. Volume Flow (barrel/day)	8760	7946	525.7	288.6
Mass Enthalpy (kJ/kg)	-6049	-4235	-2458	-1.584e+004
Mass Entropy (kJ/kg-C)	4.945	6.851	2.105	3.069
Heat Capacity (kJ/kgmole-C)	75.88	63.28	189.0	77.52
Mass Heat Capacity (kJ/kg-C)	3.006	2.955	2.106	4.298
LHV Molar Basis (Std) (Btu/SCF)	---	---	---	4.635e-004
LHV Mass Basis (Std) (kJ/kg)	---	---	---	2.268e-002
Phase Fraction [Vol. Basis]	0.7369	0.7369	0.1705	9.256e-002
Phase Fraction [Mass Basis]	0.5589	0.5589	0.2469	0.1942
Partial Pressure of CO2 (psig)	29.89	---	---	---
Cost Based on Flow (Cost/s)	0.0000	0.0000	0.0000	0.0000
Act. Gas Flow (ACT_m3/h)	52.64	52.64	---	---
Avg. Liq. Density (kgmole/m3)	18.84	16.84	7.675	55.31
Specific Heat (kJ/kgmole-C)	75.88	63.28	189.0	77.52
Std. Gas Flow (STD_m3/h)	9272	6109	644.1	2520
Std. Ideal Liq. Mass Density (kg/m3)	475.5	360.6	688.6	997.6
Act. Liq. Flow (barrel/day)	814.2	---	525.7	288.6
Z Factor	---	0.7418	0.4654	6.531e-002
Watson K	15.58	17.24	12.31	8.484
User Property	---	---	---	---
Partial Pressure of H2S (psig)	-14.69	---	---	---
Cp/(Cp - R)	1.123	1.151	1.046	1.120
Cp/Cv	1.335	1.788	1.299	1.150
Heat of Vap. (kJ/kgmole)	6.339e+004	---	---	---
Kinematic Viscosity (cSt)	---	0.1436	2.191	0.7675
Liq. Mass Density (Std. Cond) (kg/m3)	5.058	0.9092	718.8	1015
Liq. Vol. Flow (Std. Cond) (barrel/day)	2.954e+005	9.185e+005	513.2	285.8
Liquid Fraction	0.3412	0.0000	1.000	1.000
Molar Volume (m3/kgmole)	0.1480	0.2037	0.1278	1.794e-002
Mass Heat of Vap. (kJ/kg)	2511	---	---	---
Phase Fraction [Molar Basis]	0.6588	0.6588	0.0695	0.2717
Surface Tension (dyne/cm)	---	---	10.50	70.91
Thermal Conductivity (W/m-K)	---	4.230e-002	8.835e-002	0.6204
Viscosity (cP)	---	1.509e-002	1.538	0.7717
Cv (Semi-Ideal) (kJ/kgmole-C)	67.56	54.96	180.7	69.21
Mass Cv (Semi-Ideal) (kJ/kg-C)	2.677	2.567	2.014	3.837
Cv (kJ/kgmole-C)	56.83	35.39	145.5	67.43
Mass Cv (kJ/kg-C)	2.252	1.653	1.622	3.739
Cv (Ent. Method) (kJ/kgmole-C)	---	---	155.5	66.69
Mass Cv (Ent. Method) (kJ/kg-C)	---	---	1.734	3.698
Cp/Cv (Ent. Method)	---	---	1.215	1.162
Reid VP at 37.8 C (psig)	3319	---	300.0	---
True VP at 37.8 C (psig)	6318	---	1384	92.78
Liq. Vol. Flow - Sum(Std. Cond) (barrel/day)	9.193e+005	9.185e+005	513.2	285.8
HHV Molar Basis (Std) (Btu/SCF)	---	---	---	46.43
HHV Mass Basis (Std) (kJ/kg)	---	---	---	2272
CO2 Loading	---	---	---	---
CO2 App ML Con (kgmole/m3)	---	---	0.2068	4.363e-002
CO2 App WT Con (kgmol/kg)	---	---	2.946e-004	4.340e-005
Phase Fraction [Act. Vol. Basis]	0.9071	0.9071	6.001e-002	3.294e-002
Mass Exergy (kJ/kg)	294.5	---	---	---
Viscosity Index	-28.82	---	---	---
Ideal Gas Cp/Cv	1.216	1.247	1.061	1.329
Ideal Gas Cp (kJ/kgmole-C)	46.86	41.94	145.4	33.62

* Specified by user.

Material Stream: 7 (continued)

Fluid Package: Basis-1
Property Package: Peng-Robinson

PROPERTIES

	Overall	Vapour Phase	Liquid Phase	Aqueous Phase
Mass Ideal Gas Cp (kJ/kg-C)	1.857	1.959	1.620	1.864
Bubble Point Pressure (psig)	6277	---	---	---

COMPOSITION

Overall Phase

Vapour Fraction 0.6588

COMPONENTS	MOLAR FLOW (kgmole/h)	MOLE FRACTION	MASS FLOW (tonne/d)	MASS FRACTION	LIQUID VOLUME FLOW (m3/h)	LIQUID VOLUME FRACTION
Methane	207.0440	0.5280	79.7181	0.3356	11.0944	0.5330
Ethane	28.8006	0.0734	20.7848	0.0875	2.4348	0.1170
Propane	15.2677	0.0389	16.1583	0.0680	1.3288	0.0638
i-Butane	2.0287	0.0052	2.8300	0.0119	0.2098	0.0101
n-Butane	3.9513	0.0101	5.5120	0.0232	0.3938	0.0189
i-Pentane	0.8495	0.0022	1.4710	0.0062	0.0983	0.0047
n-Pentane	0.9602	0.0024	1.6627	0.0070	0.1100	0.0053
n-Hexane	1.4698	0.0037	3.0399	0.0128	0.1911	0.0092
Nitrogen	5.5989	0.0143	3.7642	0.0158	0.1945	0.0093
CO2	9.4151	0.0240	9.9445	0.0419	0.5020	0.0241
H2S	0.0006	0.0000	0.0005	0.0000	0.0000	0.0000
H2O	106.6990	0.2721	46.1326	0.1942	1.9261	0.0925
NBP[1]95*	0.2883	0.0007	0.4699	0.0020	0.0288	0.0014
NBP[1]121*	0.3381	0.0009	0.5912	0.0025	0.0358	0.0017
NBP[1]147*	0.4314	0.0011	0.8304	0.0035	0.0494	0.0024
NBP[1]171*	0.8224	0.0021	1.7306	0.0073	0.1013	0.0049
NBP[1]195*	1.0758	0.0027	2.4160	0.0102	0.1398	0.0067
NBP[1]222*	0.8003	0.0020	1.9331	0.0081	0.1105	0.0053
NBP[1]248*	0.6657	0.0017	1.7287	0.0073	0.0976	0.0047
NBP[1]273*	0.5358	0.0014	1.4881	0.0063	0.0831	0.0040
NBP[1]299*	0.4185	0.0011	1.2393	0.0052	0.0684	0.0033
NBP[1]325*	0.3029	0.0008	0.9528	0.0040	0.0521	0.0025
NBP[1]351*	0.2456	0.0006	0.8214	0.0035	0.0445	0.0021
NBP[1]377*	0.2247	0.0006	0.8014	0.0034	0.0429	0.0021
NBP[1]402*	0.2061	0.0005	0.7838	0.0033	0.0416	0.0020
NBP[1]428*	0.1961	0.0005	0.7956	0.0033	0.0418	0.0020
NBP[1]454*	0.1956	0.0005	0.8480	0.0036	0.0441	0.0021
NBP[1]480*	0.1982	0.0005	0.9182	0.0039	0.0473	0.0023
NBP[1]505*	0.1920	0.0005	0.9484	0.0040	0.0484	0.0023
NBP[1]531*	0.1852	0.0005	0.9740	0.0041	0.0492	0.0024
NBP[1]557*	0.1784	0.0005	0.9978	0.0042	0.0500	0.0024
NBP[1]582*	0.1706	0.0004	1.0132	0.0043	0.0503	0.0024
NBP[1]608*	0.1643	0.0004	1.0351	0.0044	0.0510	0.0025
NBP[1]634*	0.1611	0.0004	1.0753	0.0045	0.0526	0.0025
NBP[1]659*	0.1586	0.0004	1.1194	0.0047	0.0543	0.0026
NBP[1]685*	0.1641	0.0004	1.2227	0.0051	0.0588	0.0028
NBP[1]711*	0.1715	0.0004	1.3445	0.0057	0.0642	0.0031
NBP[1]736*	0.1697	0.0004	1.3915	0.0059	0.0659	0.0032
NBP[1]762*	0.1653	0.0004	1.4214	0.0060	0.0669	0.0032
NBP[1]788*	0.1585	0.0004	1.4424	0.0061	0.0674	0.0032
NBP[1]825*	0.2655	0.0007	2.5963	0.0109	0.1201	0.0058
NBP[1]873*	0.1830	0.0005	1.9404	0.0082	0.0887	0.0043
NBP[1]926*	0.1437	0.0004	1.6472	0.0069	0.0744	0.0036
NBP[1]978*	0.1474	0.0004	1.8524	0.0078	0.0825	0.0040
NBP[1]1021*	0.0728	0.0002	0.9655	0.0041	0.0426	0.0020
NBP[1]1075*	0.0449	0.0001	0.6310	0.0027	0.0276	0.0013
NBP[1]1123*	0.0417	0.0001	0.6267	0.0026	0.0271	0.0013
NBP[1]1173*	0.0300	0.0001	0.4772	0.0020	0.0205	0.0010
NBP[1]1250*	0.0393	0.0001	0.6767	0.0028	0.0287	0.0014

* Specified by user.

Material Stream: 7 (continued)

Fluid Package: Basis-1
Property Package: Peng-Robinson

COMPOSITION

Overall Phase (continued)

Vapour Fraction 0.6588

COMPONENTS	MOLAR FLOW (kgmole/h)	MOLE FRACTION	MASS FLOW (tonne/d)	MASS FRACTION	LIQUID VOLUME FLOW (m3/h)	LIQUID VOLUME FRACTION
NBP[1]1339*	0.0364	0.0001	0.6999	0.0029	0.0291	0.0014
NBP[1]1432*	0.0257	0.0001	0.5397	0.0023	0.0221	0.0011
NBP[1]1528*	0.0180	0.0000	0.4082	0.0017	0.0165	0.0008
NBP[1]1637*	0.0127	0.0000	0.3047	0.0013	0.0122	0.0006
NBP[1]1732*	0.0101	0.0000	0.2565	0.0011	0.0101	0.0005
NBP[1]1819*	0.0097	0.0000	0.2590	0.0011	0.0101	0.0005
NBP[1]1913*	0.0112	0.0000	0.3148	0.0013	0.0121	0.0006
Total	392.1623	1.0000	237.5489	1.0000	20.8162	1.0000

Vapour Phase

Phase Fraction 0.6588

COMPONENTS	MOLAR FLOW (kgmole/h)	MOLE FRACTION	MASS FLOW (tonne/d)	MASS FRACTION	LIQUID VOLUME FLOW (m3/h)	LIQUID VOLUME FRACTION
Methane	199.2448	0.7712	76.7152	0.5778	10.6764	0.6960
Ethane	25.9184	0.1003	18.7047	0.1409	2.1912	0.1428
Propane	12.3092	0.0476	13.0272	0.0981	1.0713	0.0698
i-Butane	1.4292	0.0055	1.9937	0.0150	0.1478	0.0096
n-Butane	2.5959	0.0100	3.6212	0.0273	0.2587	0.0169
i-Pentane	0.4457	0.0017	0.7718	0.0058	0.0516	0.0034
n-Pentane	0.4590	0.0018	0.7948	0.0060	0.0526	0.0034
n-Hexane	0.4545	0.0018	0.9399	0.0071	0.0591	0.0039
Nitrogen	5.4868	0.0212	3.6889	0.0278	0.1906	0.0124
CO2	8.6117	0.0333	9.0960	0.0685	0.4592	0.0299
H2S	0.0005	0.0000	0.0004	0.0000	0.0000	0.0000
H2O	0.1999	0.0008	0.0864	0.0007	0.0036	0.0002
NBP[1]95*	0.1387	0.0005	0.2261	0.0017	0.0139	0.0009
NBP[1]121*	0.1376	0.0005	0.2405	0.0018	0.0145	0.0009
NBP[1]147*	0.1437	0.0006	0.2766	0.0021	0.0164	0.0011
NBP[1]171*	0.2213	0.0009	0.4656	0.0035	0.0273	0.0018
NBP[1]195*	0.2291	0.0009	0.5145	0.0039	0.0298	0.0019
NBP[1]222*	0.1260	0.0005	0.3044	0.0023	0.0174	0.0011
NBP[1]248*	0.0767	0.0003	0.1992	0.0015	0.0112	0.0007
NBP[1]273*	0.0443	0.0002	0.1229	0.0009	0.0069	0.0004
NBP[1]299*	0.0243	0.0001	0.0719	0.0005	0.0040	0.0003
NBP[1]325*	0.0120	0.0000	0.0376	0.0003	0.0021	0.0001
NBP[1]351*	0.0065	0.0000	0.0217	0.0002	0.0012	0.0001
NBP[1]377*	0.0038	0.0000	0.0136	0.0001	0.0007	0.0000
NBP[1]402*	0.0023	0.0000	0.0086	0.0001	0.0005	0.0000
NBP[1]428*	0.0013	0.0000	0.0054	0.0000	0.0003	0.0000
NBP[1]454*	0.0008	0.0000	0.0036	0.0000	0.0002	0.0000
NBP[1]480*	0.0005	0.0000	0.0023	0.0000	0.0001	0.0000
NBP[1]505*	0.0003	0.0000	0.0014	0.0000	0.0001	0.0000
NBP[1]531*	0.0002	0.0000	0.0009	0.0000	0.0000	0.0000
NBP[1]557*	0.0001	0.0000	0.0005	0.0000	0.0000	0.0000
NBP[1]582*	0.0000	0.0000	0.0003	0.0000	0.0000	0.0000
NBP[1]608*	0.0000	0.0000	0.0002	0.0000	0.0000	0.0000
NBP[1]634*	0.0000	0.0000	0.0001	0.0000	0.0000	0.0000
NBP[1]659*	0.0000	0.0000	0.0001	0.0000	0.0000	0.0000
NBP[1]685*	0.0000	0.0000	0.0000	0.0000	0.0000	0.0000
NBP[1]711*	0.0000	0.0000	0.0000	0.0000	0.0000	0.0000
NBP[1]736*	0.0000	0.0000	0.0000	0.0000	0.0000	0.0000
NBP[1]762*	0.0000	0.0000	0.0000	0.0000	0.0000	0.0000
NBP[1]788*	0.0000	0.0000	0.0000	0.0000	0.0000	0.0000
NBP[1]825*	0.0000	0.0000	0.0000	0.0000	0.0000	0.0000
NBP[1]873*	0.0000	0.0000	0.0000	0.0000	0.0000	0.0000

* Specified by user.

Material Stream: 7 (continued)

Fluid Package: Basis-1
Property Package: Peng-Robinson

COMPOSITION

Vapour Phase (continued)

Phase Fraction 0.6588

COMPONENTS	MOLAR FLOW (kgmole/h)	MOLE FRACTION	MASS FLOW (tonne/d)	MASS FRACTION	LIQUID VOLUME FLOW (m3/h)	LIQUID VOLUME FRACTION
NBP[1]926*	0.0000	0.0000	0.0000	0.0000	0.0000	0.0000
NBP[1]978*	0.0000	0.0000	0.0000	0.0000	0.0000	0.0000
NBP[1]1021*	0.0000	0.0000	0.0000	0.0000	0.0000	0.0000
NBP[1]1075*	0.0000	0.0000	0.0000	0.0000	0.0000	0.0000
NBP[1]1123*	0.0000	0.0000	0.0000	0.0000	0.0000	0.0000
NBP[1]1173*	0.0000	0.0000	0.0000	0.0000	0.0000	0.0000
NBP[1]1250*	0.0000	0.0000	0.0000	0.0000	0.0000	0.0000
NBP[1]1339*	0.0000	0.0000	0.0000	0.0000	0.0000	0.0000
NBP[1]1432*	0.0000	0.0000	0.0000	0.0000	0.0000	0.0000
NBP[1]1528*	0.0000	0.0000	0.0000	0.0000	0.0000	0.0000
NBP[1]1637*	0.0000	0.0000	0.0000	0.0000	0.0000	0.0000
NBP[1]1732*	0.0093	0.0000	0.2365	0.0018	0.0093	0.0006
NBP[1]1819*	0.0097	0.0000	0.2590	0.0020	0.0101	0.0007
NBP[1]1913*	0.0112	0.0000	0.3148	0.0024	0.0121	0.0008
Total	258.3552	1.0000	132.7685	1.0000	15.3403	1.0000

Liquid Phase

Phase Fraction 6.946e-002

COMPONENTS	MOLAR FLOW (kgmole/h)	MOLE FRACTION	MASS FLOW (tonne/d)	MASS FRACTION	LIQUID VOLUME FLOW (m3/h)	LIQUID VOLUME FRACTION
Methane	7.7991	0.2863	3.0029	0.0512	0.4179	0.1177
Ethane	2.8822	0.1058	2.0801	0.0355	0.2437	0.0687
Propane	2.9585	0.1086	3.1311	0.0534	0.2575	0.0725
i-Butane	0.5995	0.0220	0.8362	0.0143	0.0620	0.0175
n-Butane	1.3554	0.0498	1.8907	0.0322	0.1351	0.0381
i-Pentane	0.4038	0.0148	0.6992	0.0119	0.0467	0.0132
n-Pentane	0.5013	0.0184	0.8680	0.0148	0.0574	0.0162
n-Hexane	1.0153	0.0373	2.1000	0.0358	0.1320	0.0372
Nitrogen	0.1096	0.0040	0.0737	0.0013	0.0038	0.0011
CO2	0.7200	0.0264	0.7605	0.0130	0.0384	0.0108
H2S	0.0001	0.0000	0.0001	0.0000	0.0000	0.0000
H2O	0.0178	0.0007	0.0077	0.0001	0.0003	0.0001
NBP[1]95*	0.1496	0.0055	0.2439	0.0042	0.0149	0.0042
NBP[1]121*	0.2006	0.0074	0.3506	0.0060	0.0212	0.0060
NBP[1]147*	0.2878	0.0106	0.5539	0.0094	0.0329	0.0093
NBP[1]171*	0.6012	0.0221	1.2650	0.0216	0.0740	0.0209
NBP[1]195*	0.8467	0.0311	1.9015	0.0324	0.1100	0.0310
NBP[1]222*	0.6743	0.0248	1.6286	0.0278	0.0931	0.0262
NBP[1]248*	0.5889	0.0216	1.5295	0.0261	0.0864	0.0243
NBP[1]273*	0.4916	0.0180	1.3652	0.0233	0.0762	0.0215
NBP[1]299*	0.3942	0.0145	1.1674	0.0199	0.0645	0.0182
NBP[1]325*	0.2909	0.0107	0.9151	0.0156	0.0500	0.0141
NBP[1]351*	0.2392	0.0088	0.7997	0.0136	0.0433	0.0122
NBP[1]377*	0.2209	0.0081	0.7877	0.0134	0.0422	0.0119
NBP[1]402*	0.2039	0.0075	0.7753	0.0132	0.0411	0.0116
NBP[1]428*	0.1947	0.0071	0.7901	0.0135	0.0415	0.0117
NBP[1]454*	0.1947	0.0071	0.8444	0.0144	0.0439	0.0124
NBP[1]480*	0.1977	0.0073	0.9158	0.0156	0.0472	0.0133
NBP[1]505*	0.1917	0.0070	0.9469	0.0161	0.0483	0.0136
NBP[1]531*	0.1851	0.0068	0.9731	0.0166	0.0492	0.0139
NBP[1]557*	0.1783	0.0065	0.9973	0.0170	0.0500	0.0141
NBP[1]582*	0.1705	0.0063	1.0129	0.0173	0.0503	0.0142
NBP[1]608*	0.1643	0.0060	1.0349	0.0176	0.0510	0.0144
NBP[1]634*	0.1611	0.0059	1.0752	0.0183	0.0526	0.0148
NBP[1]659*	0.1586	0.0058	1.1194	0.0191	0.0543	0.0153

* Specified by user.

Material Stream: 7 (continued)

Fluid Package: Basis-1
Property Package: Peng-Robinson

COMPOSITION

Liquid Phase (continued)

Phase Fraction 6.946e-002

COMPONENTS	MOLAR FLOW (kgmole/h)	MOLE FRACTION	MASS FLOW (tonne/d)	MASS FRACTION	LIQUID VOLUME FLOW (m3/h)	LIQUID VOLUME FRACTION
NBP[1]685*	0.1641	0.0060	1.2227	0.0208	0.0588	0.0166
NBP[1]711*	0.1715	0.0063	1.3445	0.0229	0.0642	0.0181
NBP[1]736*	0.1697	0.0062	1.3915	0.0237	0.0659	0.0186
NBP[1]762*	0.1653	0.0061	1.4214	0.0242	0.0669	0.0188
NBP[1]788*	0.1585	0.0058	1.4424	0.0246	0.0674	0.0190
NBP[1]825*	0.2655	0.0097	2.5963	0.0443	0.1201	0.0338
NBP[1]873*	0.1830	0.0067	1.9404	0.0331	0.0887	0.0250
NBP[1]926*	0.1437	0.0053	1.6472	0.0281	0.0744	0.0210
NBP[1]978*	0.1474	0.0054	1.8524	0.0316	0.0825	0.0232
NBP[1]1021*	0.0728	0.0027	0.9655	0.0165	0.0426	0.0120
NBP[1]1075*	0.0449	0.0016	0.6310	0.0108	0.0276	0.0078
NBP[1]1123*	0.0417	0.0015	0.6267	0.0107	0.0271	0.0076
NBP[1]1173*	0.0300	0.0011	0.4772	0.0081	0.0205	0.0058
NBP[1]1250*	0.0393	0.0014	0.6767	0.0115	0.0287	0.0081
NBP[1]1339*	0.0364	0.0013	0.6999	0.0119	0.0291	0.0082
NBP[1]1432*	0.0257	0.0009	0.5397	0.0092	0.0221	0.0062
NBP[1]1528*	0.0180	0.0007	0.4082	0.0070	0.0165	0.0047
NBP[1]1637*	0.0127	0.0005	0.3047	0.0052	0.0122	0.0034
NBP[1]1732*	0.0008	0.0000	0.0200	0.0003	0.0008	0.0002
NBP[1]1819*	0.0000	0.0000	0.0000	0.0000	0.0000	0.0000
NBP[1]1913*	0.0000	0.0000	0.0000	0.0000	0.0000	0.0000
Total	27.2399	1.0000	58.6521	1.0000	3.5492	1.0000

Aqueous Phase

Phase Fraction 0.2717

COMPONENTS	MOLAR FLOW (kgmole/h)	MOLE FRACTION	MASS FLOW (tonne/d)	MASS FRACTION	LIQUID VOLUME FLOW (m3/h)	LIQUID VOLUME FRACTION
Methane	0.0000	0.0000	0.0000	0.0000	0.0000	0.0000
Ethane	0.0000	0.0000	0.0000	0.0000	0.0000	0.0000
Propane	0.0000	0.0000	0.0000	0.0000	0.0000	0.0000
i-Butane	0.0000	0.0000	0.0000	0.0000	0.0000	0.0000
n-Butane	0.0000	0.0000	0.0000	0.0000	0.0000	0.0000
i-Pentane	0.0000	0.0000	0.0000	0.0000	0.0000	0.0000
n-Pentane	0.0000	0.0000	0.0000	0.0000	0.0000	0.0000
n-Hexane	0.0000	0.0000	0.0000	0.0000	0.0000	0.0000
Nitrogen	0.0024	0.0000	0.0016	0.0000	0.0001	0.0000
CO2	0.0834	0.0008	0.0881	0.0019	0.0044	0.0023
H2S	0.0000	0.0000	0.0000	0.0000	0.0000	0.0000
H2O	106.4813	0.9992	46.0385	0.9981	1.9221	0.9976
NBP[1]95*	0.0000	0.0000	0.0000	0.0000	0.0000	0.0000
NBP[1]121*	0.0000	0.0000	0.0000	0.0000	0.0000	0.0000
NBP[1]147*	0.0000	0.0000	0.0000	0.0000	0.0000	0.0000
NBP[1]171*	0.0000	0.0000	0.0000	0.0000	0.0000	0.0000
NBP[1]195*	0.0000	0.0000	0.0000	0.0000	0.0000	0.0000
NBP[1]222*	0.0000	0.0000	0.0000	0.0000	0.0000	0.0000
NBP[1]248*	0.0000	0.0000	0.0000	0.0000	0.0000	0.0000
NBP[1]273*	0.0000	0.0000	0.0000	0.0000	0.0000	0.0000
NBP[1]299*	0.0000	0.0000	0.0000	0.0000	0.0000	0.0000
NBP[1]325*	0.0000	0.0000	0.0000	0.0000	0.0000	0.0000
NBP[1]351*	0.0000	0.0000	0.0000	0.0000	0.0000	0.0000
NBP[1]377*	0.0000	0.0000	0.0000	0.0000	0.0000	0.0000
NBP[1]402*	0.0000	0.0000	0.0000	0.0000	0.0000	0.0000
NBP[1]428*	0.0000	0.0000	0.0000	0.0000	0.0000	0.0000
NBP[1]454*	0.0000	0.0000	0.0000	0.0000	0.0000	0.0000
NBP[1]480*	0.0000	0.0000	0.0000	0.0000	0.0000	0.0000

* Specified by user.

Material Stream: 7 (continued)

Fluid Package: Basis-1
Property Package: Peng-Robinson

COMPOSITION

Aqueous Phase (continued)

Phase Fraction 0.2717

COMPONENTS	MOLAR FLOW (kgmole/h)	MOLE FRACTION	MASS FLOW (tonne/d)	MASS FRACTION	LIQUID VOLUME FLOW (m3/h)	LIQUID VOLUME FRACTION
NBP[1]505*	0.0000	0.0000	0.0000	0.0000	0.0000	0.0000
NBP[1]531*	0.0000	0.0000	0.0000	0.0000	0.0000	0.0000
NBP[1]557*	0.0000	0.0000	0.0000	0.0000	0.0000	0.0000
NBP[1]582*	0.0000	0.0000	0.0000	0.0000	0.0000	0.0000
NBP[1]608*	0.0000	0.0000	0.0000	0.0000	0.0000	0.0000
NBP[1]634*	0.0000	0.0000	0.0000	0.0000	0.0000	0.0000
NBP[1]659*	0.0000	0.0000	0.0000	0.0000	0.0000	0.0000
NBP[1]685*	0.0000	0.0000	0.0000	0.0000	0.0000	0.0000
NBP[1]711*	0.0000	0.0000	0.0000	0.0000	0.0000	0.0000
NBP[1]736*	0.0000	0.0000	0.0000	0.0000	0.0000	0.0000
NBP[1]762*	0.0000	0.0000	0.0000	0.0000	0.0000	0.0000
NBP[1]788*	0.0000	0.0000	0.0000	0.0000	0.0000	0.0000
NBP[1]825*	0.0000	0.0000	0.0000	0.0000	0.0000	0.0000
NBP[1]873*	0.0000	0.0000	0.0000	0.0000	0.0000	0.0000
NBP[1]926*	0.0000	0.0000	0.0000	0.0000	0.0000	0.0000
NBP[1]978*	0.0000	0.0000	0.0000	0.0000	0.0000	0.0000
NBP[1]1021*	0.0000	0.0000	0.0000	0.0000	0.0000	0.0000
NBP[1]1075*	0.0000	0.0000	0.0000	0.0000	0.0000	0.0000
NBP[1]1123*	0.0000	0.0000	0.0000	0.0000	0.0000	0.0000
NBP[1]1173*	0.0000	0.0000	0.0000	0.0000	0.0000	0.0000
NBP[1]1250*	0.0000	0.0000	0.0000	0.0000	0.0000	0.0000
NBP[1]1339*	0.0000	0.0000	0.0000	0.0000	0.0000	0.0000
NBP[1]1432*	0.0000	0.0000	0.0000	0.0000	0.0000	0.0000
NBP[1]1528*	0.0000	0.0000	0.0000	0.0000	0.0000	0.0000
NBP[1]1637*	0.0000	0.0000	0.0000	0.0000	0.0000	0.0000
NBP[1]1732*	0.0000	0.0000	0.0000	0.0000	0.0000	0.0000
NBP[1]1819*	0.0000	0.0000	0.0000	0.0000	0.0000	0.0000
NBP[1]1913*	0.0000	0.0000	0.0000	0.0000	0.0000	0.0000
Total	106.5672	1.0000	46.1283	1.0000	1.9267	1.0000

Material Stream: 8

Fluid Package: Basis-1
Property Package: Peng-Robinson

CONDITIONS

		Overall	Vapour Phase	Liquid Phase	Aqueous Phase
Vapour / Phase Fraction		0.6980	0.6980	0.0355	0.2665
Temperature:	(F)	180.0 *	180.0	180.0	180.0
Pressure:	(psig)	1240	1240	1240	1240
Molar Flow	(MMSCFD)	7.874	5.496	0.2795	2.099
Mass Flow	(tonne/d)	237.5	147.4	44.95	45.22
Std Ideal Liq Vol Flow	(barrel/day)	3142	2489	367.9	285.1
Molar Enthalpy	(kJ/kgmole)	-1.484e+005	-9.019e+004	-2.934e+005	-2.817e+005
Molar Entropy	(kJ/kgmole-C)	138.0	156.8	297.8	67.29
Heat Flow	(MMBtu/hr)	-55.18	-23.40	-3.872	-27.90
Liq Vol Flow @Std Cond	(barrel/day)	2.954e+005 *	9.727e+005	353.5	280.2

PROPERTIES

		Overall	Vapour Phase	Liquid Phase	Aqueous Phase
Molecular Weight		25.24	22.43	134.6	18.03
Molar Density	(kgmole/m3)	4.686	3.456	5.466	53.60
Mass Density	(kg/m3)	118.3	77.53	735.5	966.1
Act. Volume Flow	(barrel/day)	1.263e+004	1.196e+004	384.5	294.4
Mass Enthalpy	(kJ/kg)	-5881	-4020	-2181	-1.563e+004
Mass Entropy	(kJ/kg-C)	5.467	6.991	2.213	3.733

* Specified by user.

Material Stream: 8 (continued)

Fluid Package: Basis-1
Property Package: Peng-Robinson

PROPERTIES

	Overall	Vapour Phase	Liquid Phase	Aqueous Phase
Heat Capacity (kJ/kgmole-C)	72.28	58.45	299.5	78.26
Mass Heat Capacity (kJ/kg-C)	2.864	2.605	2.226	4.342
LHV Molar Basis (Std) (Btu/SCF)	---	---	---	5.066e-003
LHV Mass Basis (Std) (kJ/kg)	---	---	---	0.2481
Phase Fraction [Vol. Basis]	0.7922	0.7922	0.1171	9.072e-002
Phase Fraction [Mass Basis]	0.6204	0.6204	0.1892	0.1904
Partial Pressure of CO2 (psig)	27.11	---	---	---
Cost Based on Flow (Cost/s)	0.0000	0.0000	0.0000	0.0000
Act. Gas Flow (ACT_m3/h)	79.20	79.20	---	---
Avg. Liq. Density (kgmole/m3)	18.84	16.60	5.712	55.35
Specific Heat (kJ/kgmole-C)	72.28	58.45	299.5	78.26
Std. Gas Flow (STD_m3/h)	9272	6472	329.1	2471
Std. Ideal Liq. Mass Density (kg/m3)	475.5	372.4	768.6	997.8
Act. Liq. Flow (barrel/day)	678.9	---	384.5	294.4
Z Factor	---	0.8471	0.5356	5.462e-002
Watson K	15.58	16.94	11.89	8.528
User Property	---	---	---	---
Partial Pressure of H2S (psig)	-14.69	---	---	---
Cp/(Cp - R)	1.130	1.166	1.029	1.119
Cp/Cv	1.226	1.466	1.221	1.166
Heat of Vap. (kJ/kgmole)	6.371e+004	---	---	---
Kinematic Viscosity (cSt)	---	0.2009	0.9893	0.3534
Liq. Mass Density (Std. Cond) (kg/m3)	5.058	0.9530	799.9	1015
Liq. Vol. Flow (Std. Cond) (barrel/day)	2.954e+005	9.727e+005	353.5	280.2
Liquid Fraction	0.3020	0.0000	1.000	1.000
Molar Volume (m3/kgmole)	0.2134	0.2893	0.1830	1.866e-002
Mass Heat of Vap. (kJ/kg)	2524	---	---	---
Phase Fraction [Molar Basis]	0.6980	0.6980	0.0355	0.2665
Surface Tension (dyne/cm)	---	---	11.99	61.90
Thermal Conductivity (W/m-K)	---	4.461e-002	9.061e-002	0.6712
Viscosity (cP)	---	1.558e-002	0.7276	0.3414
Cv (Semi-Ideal) (kJ/kgmole-C)	63.97	50.13	291.2	69.95
Mass Cv (Semi-Ideal) (kJ/kg-C)	2.535	2.235	2.164	3.880
Cv (kJ/kgmole-C)	58.95	39.87	245.2	67.10
Mass Cv (kJ/kg-C)	2.336	1.777	1.823	3.722
Cv (Ent. Method) (kJ/kgmole-C)	---	---	261.1	65.09
Mass Cv (Ent. Method) (kJ/kg-C)	---	---	1.941	3.611
Cp/Cv (Ent. Method)	---	---	1.147	1.202
Reid VP at 37.8 C (psig)	3319	---	151.6	---
True VP at 37.8 C (psig)	6318	3580	974.7	---
Liq. Vol. Flow - Sum(Std. Cond) (barrel/day)	9.733e+005	9.727e+005	353.5	280.2
HHV Molar Basis (Std) (Btu/SCF)	---	---	---	46.45
HHV Mass Basis (Std) (kJ/kg)	---	---	---	2274
CO2 Loading	---	---	---	---
CO2 App ML Con (kgmole/m3)	---	---	9.805e-002	2.244e-002
CO2 App WT Con (kgmol/kg)	---	---	1.333e-004	2.323e-005
Phase Fraction [Act. Vol. Basis]	0.9463	0.9463	3.043e-002	2.330e-002
Mass Exergy (kJ/kg)	306.7	---	---	---
Viscosity Index	---	---	---	---
Ideal Gas Cp/Cv	1.197	1.215	1.035	1.324
Ideal Gas Cp (kJ/kgmole-C)	50.47	46.91	244.7	33.95
Mass Ideal Gas Cp (kJ/kg-C)	2.000	2.091	1.818	1.884
Bubble Point Pressure (psig)	6579	---	---	---

* Specified by user.

Material Stream: 8 (continued)

Fluid Package: Basis-1
Property Package: Peng-Robinson

COMPOSITION

Overall Phase

Vapour Fraction 0.6980

COMPONENTS	MOLAR FLOW (kgmole/h)	MOLE FRACTION	MASS FLOW (tonne/d)	MASS FRACTION	LIQUID VOLUME FLOW (m3/h)	LIQUID VOLUME FRACTION
Methane	207.0440	0.5280	79.7181	0.3356	11.0944	0.5330
Ethane	28.8006	0.0734	20.7848	0.0875	2.4348	0.1170
Propane	15.2677	0.0389	16.1583	0.0680	1.3288	0.0638
i-Butane	2.0287	0.0052	2.8300	0.0119	0.2098	0.0101
n-Butane	3.9513	0.0101	5.5120	0.0232	0.3938	0.0189
i-Pentane	0.8495	0.0022	1.4710	0.0062	0.0983	0.0047
n-Pentane	0.9602	0.0024	1.6627	0.0070	0.1100	0.0053
n-Hexane	1.4698	0.0037	3.0399	0.0128	0.1911	0.0092
Nitrogen	5.5989	0.0143	3.7642	0.0158	0.1945	0.0093
CO2	9.4151	0.0240	9.9445	0.0419	0.5020	0.0241
H2S	0.0006	0.0000	0.0005	0.0000	0.0000	0.0000
H2O	106.6990	0.2721	46.1326	0.1942	1.9261	0.0925
NBP[1]95*	0.2883	0.0007	0.4699	0.0020	0.0288	0.0014
NBP[1]121*	0.3381	0.0009	0.5912	0.0025	0.0358	0.0017
NBP[1]147*	0.4314	0.0011	0.8304	0.0035	0.0494	0.0024
NBP[1]171*	0.8224	0.0021	1.7306	0.0073	0.1013	0.0049
NBP[1]195*	1.0758	0.0027	2.4160	0.0102	0.1398	0.0067
NBP[1]222*	0.8003	0.0020	1.9331	0.0081	0.1105	0.0053
NBP[1]248*	0.6657	0.0017	1.7287	0.0073	0.0976	0.0047
NBP[1]273*	0.5358	0.0014	1.4881	0.0063	0.0831	0.0040
NBP[1]299*	0.4185	0.0011	1.2393	0.0052	0.0684	0.0033
NBP[1]325*	0.3029	0.0008	0.9528	0.0040	0.0521	0.0025
NBP[1]351*	0.2456	0.0006	0.8214	0.0035	0.0445	0.0021
NBP[1]377*	0.2247	0.0006	0.8014	0.0034	0.0429	0.0021
NBP[1]402*	0.2061	0.0005	0.7838	0.0033	0.0416	0.0020
NBP[1]428*	0.1961	0.0005	0.7956	0.0033	0.0418	0.0020
NBP[1]454*	0.1956	0.0005	0.8480	0.0036	0.0441	0.0021
NBP[1]480*	0.1982	0.0005	0.9182	0.0039	0.0473	0.0023
NBP[1]505*	0.1920	0.0005	0.9484	0.0040	0.0484	0.0023
NBP[1]531*	0.1852	0.0005	0.9740	0.0041	0.0492	0.0024
NBP[1]557*	0.1784	0.0005	0.9978	0.0042	0.0500	0.0024
NBP[1]582*	0.1706	0.0004	1.0132	0.0043	0.0503	0.0024
NBP[1]608*	0.1643	0.0004	1.0351	0.0044	0.0510	0.0025
NBP[1]634*	0.1611	0.0004	1.0753	0.0045	0.0526	0.0025
NBP[1]659*	0.1586	0.0004	1.1194	0.0047	0.0543	0.0026
NBP[1]685*	0.1641	0.0004	1.2227	0.0051	0.0588	0.0028
NBP[1]711*	0.1715	0.0004	1.3445	0.0057	0.0642	0.0031
NBP[1]736*	0.1697	0.0004	1.3915	0.0059	0.0659	0.0032
NBP[1]762*	0.1653	0.0004	1.4214	0.0060	0.0669	0.0032
NBP[1]788*	0.1585	0.0004	1.4424	0.0061	0.0674	0.0032
NBP[1]825*	0.2655	0.0007	2.5963	0.0109	0.1201	0.0058
NBP[1]873*	0.1830	0.0005	1.9404	0.0082	0.0887	0.0043
NBP[1]926*	0.1437	0.0004	1.6472	0.0069	0.0744	0.0036
NBP[1]978*	0.1474	0.0004	1.8524	0.0078	0.0825	0.0040
NBP[1]1021*	0.0728	0.0002	0.9655	0.0041	0.0426	0.0020
NBP[1]1075*	0.0449	0.0001	0.6310	0.0027	0.0276	0.0013
NBP[1]1123*	0.0417	0.0001	0.6267	0.0026	0.0271	0.0013
NBP[1]1173*	0.0300	0.0001	0.4772	0.0020	0.0205	0.0010
NBP[1]1250*	0.0393	0.0001	0.6767	0.0028	0.0287	0.0014
NBP[1]1339*	0.0364	0.0001	0.6999	0.0029	0.0291	0.0014
NBP[1]1432*	0.0257	0.0001	0.5397	0.0023	0.0221	0.0011
NBP[1]1528*	0.0180	0.0000	0.4082	0.0017	0.0165	0.0008
NBP[1]1637*	0.0127	0.0000	0.3047	0.0013	0.0122	0.0006
NBP[1]1732*	0.0101	0.0000	0.2565	0.0011	0.0101	0.0005

* Specified by user.

Material Stream: 8 (continued)

Fluid Package: Basis-1
Property Package: Peng-Robinson

COMPOSITION

Overall Phase (continued)

Vapour Fraction 0.6980

COMPONENTS	MOLAR FLOW (kgmole/h)	MOLE FRACTION	MASS FLOW (tonne/d)	MASS FRACTION	LIQUID VOLUME FLOW (m3/h)	LIQUID VOLUME FRACTION
NBP[1]1819*	0.0097	0.0000	0.2590	0.0011	0.0101	0.0005
NBP[1]1913*	0.0112	0.0000	0.3148	0.0013	0.0121	0.0006
Total	392.1623	1.0000	237.5489	1.0000	20.8162	1.0000

Vapour Phase

Phase Fraction 0.6980

COMPONENTS	MOLAR FLOW (kgmole/h)	MOLE FRACTION	MASS FLOW (tonne/d)	MASS FRACTION	LIQUID VOLUME FLOW (m3/h)	LIQUID VOLUME FRACTION
Methane	204.0643	0.7455	78.5708	0.5331	10.9347	0.6631
Ethane	27.8087	0.1016	20.0689	0.1362	2.3510	0.1426
Propane	14.2699	0.0521	15.1023	0.1025	1.2419	0.0753
i-Butane	1.8187	0.0066	2.5371	0.0172	0.1881	0.0114
n-Butane	3.4717	0.0127	4.8429	0.0329	0.3460	0.0210
i-Pentane	0.6915	0.0025	1.1974	0.0081	0.0800	0.0049
n-Pentane	0.7596	0.0028	1.3153	0.0089	0.0870	0.0053
n-Hexane	0.9814	0.0036	2.0298	0.0138	0.1276	0.0077
Nitrogen	5.5515	0.0203	3.7324	0.0253	0.1929	0.0117
CO2	9.1216	0.0333	9.6345	0.0654	0.4864	0.0295
H2S	0.0005	0.0000	0.0004	0.0000	0.0000	0.0000
H2O	2.1568	0.0079	0.9325	0.0063	0.0389	0.0024
NBP[1]95*	0.2274	0.0008	0.3707	0.0025	0.0227	0.0014
NBP[1]121*	0.2514	0.0009	0.4396	0.0030	0.0266	0.0016
NBP[1]147*	0.2972	0.0011	0.5720	0.0039	0.0340	0.0021
NBP[1]171*	0.5178	0.0019	1.0895	0.0074	0.0638	0.0039
NBP[1]195*	0.6075	0.0022	1.3644	0.0093	0.0789	0.0048
NBP[1]222*	0.3868	0.0014	0.9342	0.0063	0.0534	0.0032
NBP[1]248*	0.2693	0.0010	0.6995	0.0047	0.0395	0.0024
NBP[1]273*	0.1763	0.0006	0.4895	0.0033	0.0273	0.0017
NBP[1]299*	0.1085	0.0004	0.3214	0.0022	0.0177	0.0011
NBP[1]325*	0.0595	0.0002	0.1873	0.0013	0.0102	0.0006
NBP[1]351*	0.0355	0.0001	0.1186	0.0008	0.0064	0.0004
NBP[1]377*	0.0229	0.0001	0.0818	0.0006	0.0044	0.0003
NBP[1]402*	0.0146	0.0001	0.0556	0.0004	0.0029	0.0002
NBP[1]428*	0.0094	0.0000	0.0380	0.0003	0.0020	0.0001
NBP[1]454*	0.0062	0.0000	0.0268	0.0002	0.0014	0.0001
NBP[1]480*	0.0041	0.0000	0.0188	0.0001	0.0010	0.0001
NBP[1]505*	0.0025	0.0000	0.0123	0.0001	0.0006	0.0000
NBP[1]531*	0.0015	0.0000	0.0079	0.0001	0.0004	0.0000
NBP[1]557*	0.0009	0.0000	0.0049	0.0000	0.0002	0.0000
NBP[1]582*	0.0005	0.0000	0.0030	0.0000	0.0001	0.0000
NBP[1]608*	0.0003	0.0000	0.0018	0.0000	0.0001	0.0000
NBP[1]634*	0.0002	0.0000	0.0011	0.0000	0.0001	0.0000
NBP[1]659*	0.0001	0.0000	0.0006	0.0000	0.0000	0.0000
NBP[1]685*	0.0001	0.0000	0.0004	0.0000	0.0000	0.0000
NBP[1]711*	0.0000	0.0000	0.0002	0.0000	0.0000	0.0000
NBP[1]736*	0.0000	0.0000	0.0001	0.0000	0.0000	0.0000
NBP[1]762*	0.0000	0.0000	0.0001	0.0000	0.0000	0.0000
NBP[1]788*	0.0000	0.0000	0.0000	0.0000	0.0000	0.0000
NBP[1]825*	0.0000	0.0000	0.0000	0.0000	0.0000	0.0000
NBP[1]873*	0.0000	0.0000	0.0000	0.0000	0.0000	0.0000
NBP[1]926*	0.0000	0.0000	0.0000	0.0000	0.0000	0.0000
NBP[1]978*	0.0000	0.0000	0.0000	0.0000	0.0000	0.0000
NBP[1]1021*	0.0000	0.0000	0.0000	0.0000	0.0000	0.0000
NBP[1]1075*	0.0000	0.0000	0.0000	0.0000	0.0000	0.0000
NBP[1]1123*	0.0000	0.0000	0.0000	0.0000	0.0000	0.0000

* Specified by user.

Material Stream: 8 (continued)

Fluid Package: Basis-1
Property Package: Peng-Robinson

COMPOSITION

Vapour Phase (continued)

Phase Fraction 0.6980

COMPONENTS	MOLAR FLOW (kgmole/h)	MOLE FRACTION	MASS FLOW (tonne/d)	MASS FRACTION	LIQUID VOLUME FLOW (m3/h)	LIQUID VOLUME FRACTION
NBP[1]1173*	0.0000	0.0000	0.0000	0.0000	0.0000	0.0000
NBP[1]1250*	0.0000	0.0000	0.0000	0.0000	0.0000	0.0000
NBP[1]1339*	0.0000	0.0000	0.0000	0.0000	0.0000	0.0000
NBP[1]1432*	0.0000	0.0000	0.0000	0.0000	0.0000	0.0000
NBP[1]1528*	0.0000	0.0000	0.0000	0.0000	0.0000	0.0000
NBP[1]1637*	0.0000	0.0000	0.0000	0.0000	0.0000	0.0000
NBP[1]1732*	0.0000	0.0000	0.0001	0.0000	0.0000	0.0000
NBP[1]1819*	0.0096	0.0000	0.2547	0.0017	0.0099	0.0006
NBP[1]1913*	0.0112	0.0000	0.3148	0.0021	0.0121	0.0007
Total	273.7173	1.0000	147.3739	1.0000	16.4906	1.0000

Liquid Phase

Phase Fraction 3.550e-002

COMPONENTS	MOLAR FLOW (kgmole/h)	MOLE FRACTION	MASS FLOW (tonne/d)	MASS FRACTION	LIQUID VOLUME FLOW (m3/h)	LIQUID VOLUME FRACTION
Methane	2.9791	0.2140	1.1470	0.0255	0.1596	0.0655
Ethane	0.9919	0.0713	0.7158	0.0159	0.0839	0.0344
Propane	0.9978	0.0717	1.0560	0.0235	0.0868	0.0356
i-Butane	0.2099	0.0151	0.2929	0.0065	0.0217	0.0089
n-Butane	0.4796	0.0345	0.6690	0.0149	0.0478	0.0196
i-Pentane	0.1580	0.0114	0.2736	0.0061	0.0183	0.0075
n-Pentane	0.2007	0.0144	0.3475	0.0077	0.0230	0.0094
n-Hexane	0.4884	0.0351	1.0102	0.0225	0.0635	0.0261
Nitrogen	0.0458	0.0033	0.0308	0.0007	0.0016	0.0007
CO2	0.2497	0.0179	0.2638	0.0059	0.0133	0.0055
H2S	0.0000	0.0000	0.0000	0.0000	0.0000	0.0000
H2O	0.0639	0.0046	0.0276	0.0006	0.0012	0.0005
NBP[1]95*	0.0609	0.0044	0.0992	0.0022	0.0061	0.0025
NBP[1]121*	0.0867	0.0062	0.1515	0.0034	0.0092	0.0038
NBP[1]147*	0.1343	0.0096	0.2585	0.0057	0.0154	0.0063
NBP[1]171*	0.3047	0.0219	0.6411	0.0143	0.0375	0.0154
NBP[1]195*	0.4683	0.0336	1.0516	0.0234	0.0608	0.0250
NBP[1]222*	0.4136	0.0297	0.9989	0.0222	0.0571	0.0234
NBP[1]248*	0.3963	0.0285	1.0293	0.0229	0.0581	0.0238
NBP[1]273*	0.3596	0.0258	0.9986	0.0222	0.0557	0.0229
NBP[1]299*	0.3100	0.0223	0.9179	0.0204	0.0507	0.0208
NBP[1]325*	0.2433	0.0175	0.7655	0.0170	0.0419	0.0172
NBP[1]351*	0.2102	0.0151	0.7028	0.0156	0.0380	0.0156
NBP[1]377*	0.2018	0.0145	0.7196	0.0160	0.0386	0.0158
NBP[1]402*	0.1915	0.0138	0.7283	0.0162	0.0386	0.0159
NBP[1]428*	0.1867	0.0134	0.7575	0.0169	0.0398	0.0163
NBP[1]454*	0.1894	0.0136	0.8212	0.0183	0.0427	0.0175
NBP[1]480*	0.1941	0.0139	0.8994	0.0200	0.0463	0.0190
NBP[1]505*	0.1895	0.0136	0.9360	0.0208	0.0477	0.0196
NBP[1]531*	0.1837	0.0132	0.9661	0.0215	0.0488	0.0200
NBP[1]557*	0.1775	0.0128	0.9929	0.0221	0.0498	0.0204
NBP[1]582*	0.1701	0.0122	1.0102	0.0225	0.0502	0.0206
NBP[1]608*	0.1640	0.0118	1.0333	0.0230	0.0509	0.0209
NBP[1]634*	0.1609	0.0116	1.0742	0.0239	0.0525	0.0215
NBP[1]659*	0.1585	0.0114	1.1188	0.0249	0.0542	0.0223
NBP[1]685*	0.1641	0.0118	1.2224	0.0272	0.0588	0.0241
NBP[1]711*	0.1715	0.0123	1.3442	0.0299	0.0642	0.0263
NBP[1]736*	0.1697	0.0122	1.3914	0.0310	0.0659	0.0270
NBP[1]762*	0.1653	0.0119	1.4214	0.0316	0.0669	0.0274
NBP[1]788*	0.1585	0.0114	1.4423	0.0321	0.0674	0.0276

* Specified by user.

Material Stream: 8 (continued)

Fluid Package: Basis-1
Property Package: Peng-Robinson

COMPOSITION

Liquid Phase (continued)

Phase Fraction 3.550e-002

COMPONENTS	MOLAR FLOW (kgmole/h)	MOLE FRACTION	MASS FLOW (tonne/d)	MASS FRACTION	LIQUID VOLUME FLOW (m3/h)	LIQUID VOLUME FRACTION
NBP[1]825*	0.2655	0.0191	2.5963	0.0578	0.1201	0.0493
NBP[1]873*	0.1830	0.0131	1.9404	0.0432	0.0887	0.0364
NBP[1]926*	0.1437	0.0103	1.6472	0.0366	0.0744	0.0305
NBP[1]978*	0.1474	0.0106	1.8524	0.0412	0.0825	0.0338
NBP[1]1021*	0.0728	0.0052	0.9655	0.0215	0.0426	0.0175
NBP[1]1075*	0.0449	0.0032	0.6310	0.0140	0.0276	0.0113
NBP[1]1123*	0.0417	0.0030	0.6267	0.0139	0.0271	0.0111
NBP[1]1173*	0.0300	0.0022	0.4772	0.0106	0.0205	0.0084
NBP[1]1250*	0.0393	0.0028	0.6767	0.0151	0.0287	0.0118
NBP[1]1339*	0.0364	0.0026	0.6999	0.0156	0.0291	0.0120
NBP[1]1432*	0.0257	0.0018	0.5397	0.0120	0.0221	0.0091
NBP[1]1528*	0.0180	0.0013	0.4082	0.0091	0.0165	0.0068
NBP[1]1637*	0.0127	0.0009	0.3047	0.0068	0.0122	0.0050
NBP[1]1732*	0.0101	0.0007	0.2564	0.0057	0.0101	0.0042
NBP[1]1819*	0.0002	0.0000	0.0043	0.0001	0.0002	0.0001
NBP[1]1913*	0.0000	0.0000	0.0000	0.0000	0.0000	0.0000
Total	13.9208	1.0000	44.9550	1.0000	2.4371	1.0000

Aqueous Phase

Phase Fraction 0.2665

COMPONENTS	MOLAR FLOW (kgmole/h)	MOLE FRACTION	MASS FLOW (tonne/d)	MASS FRACTION	LIQUID VOLUME FLOW (m3/h)	LIQUID VOLUME FRACTION
Methane	0.0006	0.0000	0.0002	0.0000	0.0000	0.0000
Ethane	0.0000	0.0000	0.0000	0.0000	0.0000	0.0000
Propane	0.0000	0.0000	0.0000	0.0000	0.0000	0.0000
i-Butane	0.0000	0.0000	0.0000	0.0000	0.0000	0.0000
n-Butane	0.0000	0.0000	0.0000	0.0000	0.0000	0.0000
i-Pentane	0.0000	0.0000	0.0000	0.0000	0.0000	0.0000
n-Pentane	0.0000	0.0000	0.0000	0.0000	0.0000	0.0000
n-Hexane	0.0000	0.0000	0.0000	0.0000	0.0000	0.0000
Nitrogen	0.0015	0.0000	0.0010	0.0000	0.0001	0.0000
CO2	0.0438	0.0004	0.0462	0.0010	0.0023	0.0012
H2S	0.0000	0.0000	0.0000	0.0000	0.0000	0.0000
H2O	104.4783	0.9996	45.1725	0.9990	1.8860	0.9987
NBP[1]95*	0.0000	0.0000	0.0000	0.0000	0.0000	0.0000
NBP[1]121*	0.0000	0.0000	0.0000	0.0000	0.0000	0.0000
NBP[1]147*	0.0000	0.0000	0.0000	0.0000	0.0000	0.0000
NBP[1]171*	0.0000	0.0000	0.0000	0.0000	0.0000	0.0000
NBP[1]195*	0.0000	0.0000	0.0000	0.0000	0.0000	0.0000
NBP[1]222*	0.0000	0.0000	0.0000	0.0000	0.0000	0.0000
NBP[1]248*	0.0000	0.0000	0.0000	0.0000	0.0000	0.0000
NBP[1]273*	0.0000	0.0000	0.0000	0.0000	0.0000	0.0000
NBP[1]299*	0.0000	0.0000	0.0000	0.0000	0.0000	0.0000
NBP[1]325*	0.0000	0.0000	0.0000	0.0000	0.0000	0.0000
NBP[1]351*	0.0000	0.0000	0.0000	0.0000	0.0000	0.0000
NBP[1]377*	0.0000	0.0000	0.0000	0.0000	0.0000	0.0000
NBP[1]402*	0.0000	0.0000	0.0000	0.0000	0.0000	0.0000
NBP[1]428*	0.0000	0.0000	0.0000	0.0000	0.0000	0.0000
NBP[1]454*	0.0000	0.0000	0.0000	0.0000	0.0000	0.0000
NBP[1]480*	0.0000	0.0000	0.0000	0.0000	0.0000	0.0000
NBP[1]505*	0.0000	0.0000	0.0000	0.0000	0.0000	0.0000
NBP[1]531*	0.0000	0.0000	0.0000	0.0000	0.0000	0.0000
NBP[1]557*	0.0000	0.0000	0.0000	0.0000	0.0000	0.0000
NBP[1]582*	0.0000	0.0000	0.0000	0.0000	0.0000	0.0000
NBP[1]608*	0.0000	0.0000	0.0000	0.0000	0.0000	0.0000

* Specified by user.

Material Stream: 8 (continued)

Fluid Package: Basis-1
Property Package: Peng-Robinson

COMPOSITION

Aqueous Phase (continued)

Phase Fraction 0.2665

COMPONENTS	MOLAR FLOW (kgmole/h)	MOLE FRACTION	MASS FLOW (tonne/d)	MASS FRACTION	LIQUID VOLUME FLOW (m3/h)	LIQUID VOLUME FRACTION
NBP[1]634*	0.0000	0.0000	0.0000	0.0000	0.0000	0.0000
NBP[1]659*	0.0000	0.0000	0.0000	0.0000	0.0000	0.0000
NBP[1]685*	0.0000	0.0000	0.0000	0.0000	0.0000	0.0000
NBP[1]711*	0.0000	0.0000	0.0000	0.0000	0.0000	0.0000
NBP[1]736*	0.0000	0.0000	0.0000	0.0000	0.0000	0.0000
NBP[1]762*	0.0000	0.0000	0.0000	0.0000	0.0000	0.0000
NBP[1]788*	0.0000	0.0000	0.0000	0.0000	0.0000	0.0000
NBP[1]825*	0.0000	0.0000	0.0000	0.0000	0.0000	0.0000
NBP[1]873*	0.0000	0.0000	0.0000	0.0000	0.0000	0.0000
NBP[1]926*	0.0000	0.0000	0.0000	0.0000	0.0000	0.0000
NBP[1]978*	0.0000	0.0000	0.0000	0.0000	0.0000	0.0000
NBP[1]1021*	0.0000	0.0000	0.0000	0.0000	0.0000	0.0000
NBP[1]1075*	0.0000	0.0000	0.0000	0.0000	0.0000	0.0000
NBP[1]1123*	0.0000	0.0000	0.0000	0.0000	0.0000	0.0000
NBP[1]1173*	0.0000	0.0000	0.0000	0.0000	0.0000	0.0000
NBP[1]1250*	0.0000	0.0000	0.0000	0.0000	0.0000	0.0000
NBP[1]1339*	0.0000	0.0000	0.0000	0.0000	0.0000	0.0000
NBP[1]1432*	0.0000	0.0000	0.0000	0.0000	0.0000	0.0000
NBP[1]1528*	0.0000	0.0000	0.0000	0.0000	0.0000	0.0000
NBP[1]1637*	0.0000	0.0000	0.0000	0.0000	0.0000	0.0000
NBP[1]1732*	0.0000	0.0000	0.0000	0.0000	0.0000	0.0000
NBP[1]1819*	0.0000	0.0000	0.0000	0.0000	0.0000	0.0000
NBP[1]1913*	0.0000	0.0000	0.0000	0.0000	0.0000	0.0000
Total	104.5241	1.0000	45.2199	1.0000	1.8884	1.0000

Material Stream: 9

Fluid Package: Basis-1
Property Package: Peng-Robinson

CONDITIONS

		Overall	Vapour Phase	Liquid Phase	Aqueous Phase
Vapour / Phase Fraction		0.0000	0.0000	1.0000	0.0000
Temperature:	(F)	179.9	179.9	179.9	179.9
Pressure:	(psig)	1235	1235	1235	1235
Molar Flow	(MMSCFD)	0.2793	0.0000	0.2793	0.0000
Mass Flow	(tonne/d)	44.97	0.0000	44.97	0.0000
Std Ideal Liq Vol Flow	(barrel/day)	367.9	0.0000	367.9	0.0000
Molar Enthalpy	(kJ/kgmole)	-2.936e+005	-9.019e+004	-2.936e+005	-2.817e+005
Molar Entropy	(kJ/kgmole-C)	297.9	156.9	297.9	67.27
Heat Flow	(MMBtu/hr)	-3.872	0.0000	-3.872	0.0000
Liq Vol Flow @Std Cond	(barrel/day)	353.5 *	0.0000	353.5	0.0000

PROPERTIES

		Overall	Vapour Phase	Liquid Phase	Aqueous Phase
Molecular Weight		134.7	22.43	134.7	18.03
Molar Density	(kgmole/m3)	5.463	3.442	5.463	53.60
Mass Density	(kg/m3)	735.6	77.20	735.6	966.2
Act. Volume Flow	(barrel/day)	384.5	0.0000	384.5	0.0000
Mass Enthalpy	(kJ/kg)	-2181	-4020	-2181	-1.563e+004
Mass Entropy	(kJ/kg-C)	2.212	6.994	2.212	3.732
Heat Capacity	(kJ/kgmole-C)	299.7	58.39	299.7	78.26
Mass Heat Capacity	(kJ/kg-C)	2.226	2.603	2.226	4.342
LHV Molar Basis (Std)	(Btu/SCF)	---	---	---	5.036e-003
LHV Mass Basis (Std)	(kJ/kg)	---	---	---	0.2466
Phase Fraction [Vol. Basis]		---	---	1.000	---

* Specified by user.

Material Stream: 9 (continued)

Fluid Package: Basis-1
Property Package: Peng-Robinson

PROPERTIES

	Overall	Vapour Phase	Liquid Phase	Aqueous Phase
Phase Fraction [Mass Basis]	0.0000	0.0000	1.000	0.0000
Partial Pressure of CO2 (psig)	-14.70	---	---	---
Cost Based on Flow (Cost/s)	0.0000	0.0000	0.0000	0.0000
Act. Gas Flow (ACT_m3/h)	---	---	---	---
Avg. Liq. Density (kgmole/m3)	5.708	16.60	5.708	55.35
Specific Heat (kJ/kgmole-C)	299.7	58.39	299.7	78.26
Std. Gas Flow (STD_m3/h)	329.0	0.0000	329.0	0.0000
Std. Ideal Liq. Mass Density (kg/m3)	768.7	372.3	768.7	997.8
Act. Liq. Flow (barrel/day)	384.5	---	384.5	0.0000
Z Factor	---	0.8474	0.5339	5.441e-002
Watson K	11.89	16.94	11.89	8.528
User Property	---	---	---	---
Partial Pressure of H2S (psig)	-14.70	---	---	---
Cp/(Cp - R)	1.029	1.166	1.029	1.119
Cp/Cv	1.221	1.465	1.221	1.166
Heat of Vap. (kJ/kgmole)	1.811e+005	---	---	---
Kinematic Viscosity (cSt)	0.9907	0.2016	0.9907	0.3537
Liq. Mass Density (Std. Cond) (kg/m3)	800.0	0.9529	800.0	1015
Liq. Vol. Flow (Std. Cond) (barrel/day)	353.5	0.0000	353.5	0.0000
Liquid Fraction	1.000	0.0000	1.000	1.000
Molar Volume (m3/kgmole)	0.1831	0.2906	0.1831	1.866e-002
Mass Heat of Vap. (kJ/kg)	1344	---	---	---
Phase Fraction [Molar Basis]	0.0000	0.0000	1.0000	0.0000
Surface Tension (dyne/cm)	12.00	---	12.00	61.91
Thermal Conductivity (W/m-K)	9.065e-002	4.456e-002	9.065e-002	0.6712
Viscosity (cP)	0.7288	1.556e-002	0.7288	0.3417
Cv (Semi-Ideal) (kJ/kgmole-C)	291.4	50.08	291.4	69.95
Mass Cv (Semi-Ideal) (kJ/kg-C)	2.164	2.232	2.164	3.880
Cv (kJ/kgmole-C)	245.4	39.85	245.4	67.10
Mass Cv (kJ/kg-C)	1.823	1.777	1.823	3.722
Cv (Ent. Method) (kJ/kgmole-C)	259.5	---	259.5	64.64
Mass Cv (Ent. Method) (kJ/kg-C)	1.927	---	1.927	3.586
Cp/Cv (Ent. Method)	1.155	---	1.155	1.211
Reid VP at 37.8 C (psig)	151.1	---	151.1	---
True VP at 37.8 C (psig)	970.9	---	970.9	---
Liq. Vol. Flow - Sum(Std. Cond) (barrel/day)	353.5	0.0000	353.5	0.0000
HHV Molar Basis (Std) (Btu/SCF)	---	---	---	46.45
HHV Mass Basis (Std) (kJ/kg)	---	---	---	2274
CO2 Loading	---	---	---	---
CO2 App ML Con (kgmole/m3)	9.777e-002	---	9.777e-002	---
CO2 App WT Con (kgmol/kg)	1.329e-004	---	1.329e-004	---
Phase Fraction [Act. Vol. Basis]	0.0000	0.0000	1.000	0.0000
Mass Exergy (kJ/kg)	45.64	---	---	---
Viscosity Index	3.121	---	---	---
Ideal Gas Cp/Cv	1.035	1.215	1.035	1.324
Ideal Gas Cp (kJ/kgmole-C)	244.8	46.90	244.8	33.95
Mass Ideal Gas Cp (kJ/kg-C)	1.818	2.091	1.818	1.884
Bubble Point Pressure (psig)	1235	---	---	---

COMPOSITION

Overall Phase

Vapour Fraction 0.0000

COMPONENTS	MOLAR FLOW (kgmole/h)	MOLE FRACTION	MASS FLOW (tonne/d)	MASS FRACTION	LIQUID VOLUME FLOW (m3/h)	LIQUID VOLUME FRACTION
Methane	2.9680	0.2133	1.1428	0.0254	0.1590	0.0653
Ethane	0.9898	0.0711	0.7143	0.0159	0.0837	0.0343
Propane	0.9969	0.0717	1.0551	0.0235	0.0868	0.0356

Licensed to: PETROCHEMICAL ENGINEERIN
* Specified by user.

Material Stream: 9 (continued)

Fluid Package: Basis-1
Property Package: Peng-Robinson

COMPOSITION

Overall Phase (continued)

Vapour Fraction 0.0000

COMPONENTS	MOLAR FLOW (kgmole/h)	MOLE FRACTION	MASS FLOW (tonne/d)	MASS FRACTION	LIQUID VOLUME FLOW (m3/h)	LIQUID VOLUME FRACTION
i-Butane	0.2099	0.0151	0.2929	0.0065	0.0217	0.0089
n-Butane	0.4797	0.0345	0.6692	0.0149	0.0478	0.0196
i-Pentane	0.1582	0.0114	0.2739	0.0061	0.0183	0.0075
n-Pentane	0.2009	0.0144	0.3479	0.0077	0.0230	0.0094
n-Hexane	0.4893	0.0352	1.0120	0.0225	0.0636	0.0261
Nitrogen	0.0456	0.0033	0.0307	0.0007	0.0016	0.0007
CO2	0.2490	0.0179	0.2630	0.0058	0.0133	0.0054
H2S	0.0000	0.0000	0.0000	0.0000	0.0000	0.0000
H2O	0.0638	0.0046	0.0276	0.0006	0.0012	0.0005
NBP[1]95*	0.0609	0.0044	0.0994	0.0022	0.0061	0.0025
NBP[1]121*	0.0868	0.0062	0.1518	0.0034	0.0092	0.0038
NBP[1]147*	0.1345	0.0097	0.2589	0.0058	0.0154	0.0063
NBP[1]171*	0.3052	0.0219	0.6423	0.0143	0.0376	0.0154
NBP[1]195*	0.4692	0.0337	1.0536	0.0234	0.0610	0.0250
NBP[1]222*	0.4143	0.0298	1.0008	0.0223	0.0572	0.0235
NBP[1]248*	0.3971	0.0285	1.0312	0.0229	0.0582	0.0239
NBP[1]273*	0.3602	0.0259	1.0003	0.0222	0.0558	0.0229
NBP[1]299*	0.3105	0.0223	0.9193	0.0204	0.0508	0.0208
NBP[1]325*	0.2436	0.0175	0.7664	0.0170	0.0419	0.0172
NBP[1]351*	0.2104	0.0151	0.7035	0.0156	0.0381	0.0156
NBP[1]377*	0.2019	0.0145	0.7201	0.0160	0.0386	0.0158
NBP[1]402*	0.1916	0.0138	0.7287	0.0162	0.0387	0.0159
NBP[1]428*	0.1868	0.0134	0.7579	0.0169	0.0398	0.0163
NBP[1]454*	0.1895	0.0136	0.8215	0.0183	0.0427	0.0175
NBP[1]480*	0.1942	0.0140	0.8996	0.0200	0.0463	0.0190
NBP[1]505*	0.1895	0.0136	0.9362	0.0208	0.0478	0.0196
NBP[1]531*	0.1837	0.0132	0.9662	0.0215	0.0488	0.0200
NBP[1]557*	0.1775	0.0128	0.9930	0.0221	0.0498	0.0204
NBP[1]582*	0.1701	0.0122	1.0102	0.0225	0.0502	0.0206
NBP[1]608*	0.1640	0.0118	1.0333	0.0230	0.0509	0.0209
NBP[1]634*	0.1609	0.0116	1.0743	0.0239	0.0525	0.0215
NBP[1]659*	0.1585	0.0114	1.1188	0.0249	0.0542	0.0223
NBP[1]685*	0.1641	0.0118	1.2224	0.0272	0.0588	0.0241
NBP[1]711*	0.1715	0.0123	1.3442	0.0299	0.0642	0.0263
NBP[1]736*	0.1697	0.0122	1.3914	0.0309	0.0659	0.0270
NBP[1]762*	0.1653	0.0119	1.4214	0.0316	0.0669	0.0274
NBP[1]788*	0.1585	0.0114	1.4423	0.0321	0.0674	0.0276
NBP[1]825*	0.2655	0.0191	2.5963	0.0577	0.1201	0.0493
NBP[1]873*	0.1830	0.0132	1.9404	0.0432	0.0887	0.0364
NBP[1]926*	0.1437	0.0103	1.6472	0.0366	0.0744	0.0305
NBP[1]978*	0.1474	0.0106	1.8524	0.0412	0.0825	0.0338
NBP[1]1021*	0.0728	0.0052	0.9655	0.0215	0.0426	0.0175
NBP[1]1075*	0.0449	0.0032	0.6310	0.0140	0.0276	0.0113
NBP[1]1123*	0.0417	0.0030	0.6267	0.0139	0.0271	0.0111
NBP[1]1173*	0.0300	0.0022	0.4772	0.0106	0.0205	0.0084
NBP[1]1250*	0.0393	0.0028	0.6767	0.0150	0.0287	0.0118
NBP[1]1339*	0.0364	0.0026	0.6999	0.0156	0.0291	0.0120
NBP[1]1432*	0.0257	0.0018	0.5397	0.0120	0.0221	0.0091
NBP[1]1528*	0.0180	0.0013	0.4082	0.0091	0.0165	0.0068
NBP[1]1637*	0.0127	0.0009	0.3047	0.0068	0.0122	0.0050
NBP[1]1732*	0.0101	0.0007	0.2564	0.0057	0.0101	0.0042
NBP[1]1819*	0.0002	0.0000	0.0045	0.0001	0.0002	0.0001
NBP[1]1913*	0.0000	0.0000	0.0000	0.0000	0.0000	0.0000
Total	13.9126	1.0000	44.9650	1.0000	2.4372	1.0000

* Specified by user.

Material Stream: 9 (continued)

Fluid Package: Basis-1
Property Package: Peng-Robinson

COMPOSITION

Vapour Phase

Phase Fraction 0.0000

COMPONENTS	MOLAR FLOW (kgmole/h)	MOLE FRACTION	MASS FLOW (tonne/d)	MASS FRACTION	LIQUID VOLUME FLOW (m3/h)	LIQUID VOLUME FRACTION
Methane	0.0000	0.7455	0.0000	0.5332	0.0000	0.6631
Ethane	0.0000	0.1016	0.0000	0.1362	0.0000	0.1426
Propane	0.0000	0.0521	0.0000	0.1025	0.0000	0.0753
i-Butane	0.0000	0.0066	0.0000	0.0172	0.0000	0.0114
n-Butane	0.0000	0.0127	0.0000	0.0329	0.0000	0.0210
i-Pentane	0.0000	0.0025	0.0000	0.0081	0.0000	0.0049
n-Pentane	0.0000	0.0028	0.0000	0.0089	0.0000	0.0053
n-Hexane	0.0000	0.0036	0.0000	0.0138	0.0000	0.0077
Nitrogen	0.0000	0.0203	0.0000	0.0253	0.0000	0.0117
CO2	0.0000	0.0333	0.0000	0.0654	0.0000	0.0295
H2S	0.0000	0.0000	0.0000	0.0000	0.0000	0.0000
H2O	0.0000	0.0079	0.0000	0.0063	0.0000	0.0024
NBP[1]95*	0.0000	0.0008	0.0000	0.0025	0.0000	0.0014
NBP[1]121*	0.0000	0.0009	0.0000	0.0030	0.0000	0.0016
NBP[1]147*	0.0000	0.0011	0.0000	0.0039	0.0000	0.0021
NBP[1]171*	0.0000	0.0019	0.0000	0.0074	0.0000	0.0039
NBP[1]195*	0.0000	0.0022	0.0000	0.0092	0.0000	0.0048
NBP[1]222*	0.0000	0.0014	0.0000	0.0063	0.0000	0.0032
NBP[1]248*	0.0000	0.0010	0.0000	0.0047	0.0000	0.0024
NBP[1]273*	0.0000	0.0006	0.0000	0.0033	0.0000	0.0017
NBP[1]299*	0.0000	0.0004	0.0000	0.0022	0.0000	0.0011
NBP[1]325*	0.0000	0.0002	0.0000	0.0013	0.0000	0.0006
NBP[1]351*	0.0000	0.0001	0.0000	0.0008	0.0000	0.0004
NBP[1]377*	0.0000	0.0001	0.0000	0.0006	0.0000	0.0003
NBP[1]402*	0.0000	0.0001	0.0000	0.0004	0.0000	0.0002
NBP[1]428*	0.0000	0.0000	0.0000	0.0003	0.0000	0.0001
NBP[1]454*	0.0000	0.0000	0.0000	0.0002	0.0000	0.0001
NBP[1]480*	0.0000	0.0000	0.0000	0.0001	0.0000	0.0001
NBP[1]505*	0.0000	0.0000	0.0000	0.0001	0.0000	0.0000
NBP[1]531*	0.0000	0.0000	0.0000	0.0001	0.0000	0.0000
NBP[1]557*	0.0000	0.0000	0.0000	0.0000	0.0000	0.0000
NBP[1]582*	0.0000	0.0000	0.0000	0.0000	0.0000	0.0000
NBP[1]608*	0.0000	0.0000	0.0000	0.0000	0.0000	0.0000
NBP[1]634*	0.0000	0.0000	0.0000	0.0000	0.0000	0.0000
NBP[1]659*	0.0000	0.0000	0.0000	0.0000	0.0000	0.0000
NBP[1]685*	0.0000	0.0000	0.0000	0.0000	0.0000	0.0000
NBP[1]711*	0.0000	0.0000	0.0000	0.0000	0.0000	0.0000
NBP[1]736*	0.0000	0.0000	0.0000	0.0000	0.0000	0.0000
NBP[1]762*	0.0000	0.0000	0.0000	0.0000	0.0000	0.0000
NBP[1]788*	0.0000	0.0000	0.0000	0.0000	0.0000	0.0000
NBP[1]825*	0.0000	0.0000	0.0000	0.0000	0.0000	0.0000
NBP[1]873*	0.0000	0.0000	0.0000	0.0000	0.0000	0.0000
NBP[1]926*	0.0000	0.0000	0.0000	0.0000	0.0000	0.0000
NBP[1]978*	0.0000	0.0000	0.0000	0.0000	0.0000	0.0000
NBP[1]1021*	0.0000	0.0000	0.0000	0.0000	0.0000	0.0000
NBP[1]1075*	0.0000	0.0000	0.0000	0.0000	0.0000	0.0000
NBP[1]1123*	0.0000	0.0000	0.0000	0.0000	0.0000	0.0000
NBP[1]1173*	0.0000	0.0000	0.0000	0.0000	0.0000	0.0000
NBP[1]1250*	0.0000	0.0000	0.0000	0.0000	0.0000	0.0000
NBP[1]1339*	0.0000	0.0000	0.0000	0.0000	0.0000	0.0000
NBP[1]1432*	0.0000	0.0000	0.0000	0.0000	0.0000	0.0000
NBP[1]1528*	0.0000	0.0000	0.0000	0.0000	0.0000	0.0000
NBP[1]1637*	0.0000	0.0000	0.0000	0.0000	0.0000	0.0000
NBP[1]1732*	0.0000	0.0000	0.0000	0.0000	0.0000	0.0000

* Specified by user.

Material Stream: 9 (continued)

Fluid Package: Basis-1
Property Package: Peng-Robinson

COMPOSITION

Vapour Phase (continued)

Phase Fraction 0.0000

COMPONENTS	MOLAR FLOW (kgmole/h)	MOLE FRACTION	MASS FLOW (tonne/d)	MASS FRACTION	LIQUID VOLUME FLOW (m3/h)	LIQUID VOLUME FRACTION
NBP[1]1819*	0.0000	0.0000	0.0000	0.0017	0.0000	0.0006
NBP[1]1913*	0.0000	0.0000	0.0000	0.0021	0.0000	0.0007
Total	0.0000	1.0000	0.0000	1.0000	0.0000	1.0000

Liquid Phase

Phase Fraction 1.000

COMPONENTS	MOLAR FLOW (kgmole/h)	MOLE FRACTION	MASS FLOW (tonne/d)	MASS FRACTION	LIQUID VOLUME FLOW (m3/h)	LIQUID VOLUME FRACTION
Methane	2.9680	0.2133	1.1428	0.0254	0.1590	0.0653
Ethane	0.9898	0.0711	0.7143	0.0159	0.0837	0.0343
Propane	0.9969	0.0717	1.0551	0.0235	0.0868	0.0356
i-Butane	0.2099	0.0151	0.2929	0.0065	0.0217	0.0089
n-Butane	0.4797	0.0345	0.6692	0.0149	0.0478	0.0196
i-Pentane	0.1582	0.0114	0.2739	0.0061	0.0183	0.0075
n-Pentane	0.2009	0.0144	0.3479	0.0077	0.0230	0.0094
n-Hexane	0.4893	0.0352	1.0120	0.0225	0.0636	0.0261
Nitrogen	0.0456	0.0033	0.0307	0.0007	0.0016	0.0007
CO2	0.2490	0.0179	0.2630	0.0058	0.0133	0.0054
H2S	0.0000	0.0000	0.0000	0.0000	0.0000	0.0000
H2O	0.0638	0.0046	0.0276	0.0006	0.0012	0.0005
NBP[1]95*	0.0609	0.0044	0.0994	0.0022	0.0061	0.0025
NBP[1]121*	0.0868	0.0062	0.1518	0.0034	0.0092	0.0038
NBP[1]147*	0.1345	0.0097	0.2589	0.0058	0.0154	0.0063
NBP[1]171*	0.3052	0.0219	0.6423	0.0143	0.0376	0.0154
NBP[1]195*	0.4692	0.0337	1.0536	0.0234	0.0610	0.0250
NBP[1]222*	0.4143	0.0298	1.0008	0.0223	0.0572	0.0235
NBP[1]248*	0.3971	0.0285	1.0312	0.0229	0.0582	0.0239
NBP[1]273*	0.3602	0.0259	1.0003	0.0222	0.0558	0.0229
NBP[1]299*	0.3105	0.0223	0.9193	0.0204	0.0508	0.0208
NBP[1]325*	0.2436	0.0175	0.7664	0.0170	0.0419	0.0172
NBP[1]351*	0.2104	0.0151	0.7035	0.0156	0.0381	0.0156
NBP[1]377*	0.2019	0.0145	0.7201	0.0160	0.0386	0.0158
NBP[1]402*	0.1916	0.0138	0.7287	0.0162	0.0387	0.0159
NBP[1]428*	0.1868	0.0134	0.7579	0.0169	0.0398	0.0163
NBP[1]454*	0.1895	0.0136	0.8215	0.0183	0.0427	0.0175
NBP[1]480*	0.1942	0.0140	0.8996	0.0200	0.0463	0.0190
NBP[1]505*	0.1895	0.0136	0.9362	0.0208	0.0478	0.0196
NBP[1]531*	0.1837	0.0132	0.9662	0.0215	0.0488	0.0200
NBP[1]557*	0.1775	0.0128	0.9930	0.0221	0.0498	0.0204
NBP[1]582*	0.1701	0.0122	1.0102	0.0225	0.0502	0.0206
NBP[1]608*	0.1640	0.0118	1.0333	0.0230	0.0509	0.0209
NBP[1]634*	0.1609	0.0116	1.0743	0.0239	0.0525	0.0215
NBP[1]659*	0.1585	0.0114	1.1188	0.0249	0.0542	0.0223
NBP[1]685*	0.1641	0.0118	1.2224	0.0272	0.0588	0.0241
NBP[1]711*	0.1715	0.0123	1.3442	0.0299	0.0642	0.0263
NBP[1]736*	0.1697	0.0122	1.3914	0.0309	0.0659	0.0270
NBP[1]762*	0.1653	0.0119	1.4214	0.0316	0.0669	0.0274
NBP[1]788*	0.1585	0.0114	1.4423	0.0321	0.0674	0.0276
NBP[1]825*	0.2655	0.0191	2.5963	0.0577	0.1201	0.0493
NBP[1]873*	0.1830	0.0132	1.9404	0.0432	0.0887	0.0364
NBP[1]926*	0.1437	0.0103	1.6472	0.0366	0.0744	0.0305
NBP[1]978*	0.1474	0.0106	1.8524	0.0412	0.0825	0.0338
NBP[1]1021*	0.0728	0.0052	0.9655	0.0215	0.0426	0.0175
NBP[1]1075*	0.0449	0.0032	0.6310	0.0140	0.0276	0.0113
NBP[1]1123*	0.0417	0.0030	0.6267	0.0139	0.0271	0.0111

* Specified by user.

Material Stream: 9 (continued)

Fluid Package: Basis-1
Property Package: Peng-Robinson

COMPOSITION

Liquid Phase (continued)

Phase Fraction 1.000

COMPONENTS	MOLAR FLOW (kgmole/h)	MOLE FRACTION	MASS FLOW (tonne/d)	MASS FRACTION	LIQUID VOLUME FLOW (m3/h)	LIQUID VOLUME FRACTION
NBP[1]1173*	0.0300	0.0022	0.4772	0.0106	0.0205	0.0084
NBP[1]1250*	0.0393	0.0028	0.6767	0.0150	0.0287	0.0118
NBP[1]1339*	0.0364	0.0026	0.6999	0.0156	0.0291	0.0120
NBP[1]1432*	0.0257	0.0018	0.5397	0.0120	0.0221	0.0091
NBP[1]1528*	0.0180	0.0013	0.4082	0.0091	0.0165	0.0068
NBP[1]1637*	0.0127	0.0009	0.3047	0.0068	0.0122	0.0050
NBP[1]1732*	0.0101	0.0007	0.2564	0.0057	0.0101	0.0042
NBP[1]1819*	0.0002	0.0000	0.0045	0.0001	0.0002	0.0001
NBP[1]1913*	0.0000	0.0000	0.0000	0.0000	0.0000	0.0000
Total	13.9126	1.0000	44.9650	1.0000	2.4372	1.0000

Aqueous Phase

Phase Fraction 0.0000

COMPONENTS	MOLAR FLOW (kgmole/h)	MOLE FRACTION	MASS FLOW (tonne/d)	MASS FRACTION	LIQUID VOLUME FLOW (m3/h)	LIQUID VOLUME FRACTION
Methane	0.0000	0.0000	0.0000	0.0000	0.0000	0.0000
Ethane	0.0000	0.0000	0.0000	0.0000	0.0000	0.0000
Propane	0.0000	0.0000	0.0000	0.0000	0.0000	0.0000
i-Butane	0.0000	0.0000	0.0000	0.0000	0.0000	0.0000
n-Butane	0.0000	0.0000	0.0000	0.0000	0.0000	0.0000
i-Pentane	0.0000	0.0000	0.0000	0.0000	0.0000	0.0000
n-Pentane	0.0000	0.0000	0.0000	0.0000	0.0000	0.0000
n-Hexane	0.0000	0.0000	0.0000	0.0000	0.0000	0.0000
Nitrogen	0.0000	0.0000	0.0000	0.0000	0.0000	0.0000
CO2	0.0000	0.0004	0.0000	0.0010	0.0000	0.0012
H2S	0.0000	0.0000	0.0000	0.0000	0.0000	0.0000
H2O	0.0000	0.9996	0.0000	0.9990	0.0000	0.9987
NBP[1]95*	0.0000	0.0000	0.0000	0.0000	0.0000	0.0000
NBP[1]121*	0.0000	0.0000	0.0000	0.0000	0.0000	0.0000
NBP[1]147*	0.0000	0.0000	0.0000	0.0000	0.0000	0.0000
NBP[1]171*	0.0000	0.0000	0.0000	0.0000	0.0000	0.0000
NBP[1]195*	0.0000	0.0000	0.0000	0.0000	0.0000	0.0000
NBP[1]222*	0.0000	0.0000	0.0000	0.0000	0.0000	0.0000
NBP[1]248*	0.0000	0.0000	0.0000	0.0000	0.0000	0.0000
NBP[1]273*	0.0000	0.0000	0.0000	0.0000	0.0000	0.0000
NBP[1]299*	0.0000	0.0000	0.0000	0.0000	0.0000	0.0000
NBP[1]325*	0.0000	0.0000	0.0000	0.0000	0.0000	0.0000
NBP[1]351*	0.0000	0.0000	0.0000	0.0000	0.0000	0.0000
NBP[1]377*	0.0000	0.0000	0.0000	0.0000	0.0000	0.0000
NBP[1]402*	0.0000	0.0000	0.0000	0.0000	0.0000	0.0000
NBP[1]428*	0.0000	0.0000	0.0000	0.0000	0.0000	0.0000
NBP[1]454*	0.0000	0.0000	0.0000	0.0000	0.0000	0.0000
NBP[1]480*	0.0000	0.0000	0.0000	0.0000	0.0000	0.0000
NBP[1]505*	0.0000	0.0000	0.0000	0.0000	0.0000	0.0000
NBP[1]531*	0.0000	0.0000	0.0000	0.0000	0.0000	0.0000
NBP[1]557*	0.0000	0.0000	0.0000	0.0000	0.0000	0.0000
NBP[1]582*	0.0000	0.0000	0.0000	0.0000	0.0000	0.0000
NBP[1]608*	0.0000	0.0000	0.0000	0.0000	0.0000	0.0000
NBP[1]634*	0.0000	0.0000	0.0000	0.0000	0.0000	0.0000
NBP[1]659*	0.0000	0.0000	0.0000	0.0000	0.0000	0.0000
NBP[1]685*	0.0000	0.0000	0.0000	0.0000	0.0000	0.0000
NBP[1]711*	0.0000	0.0000	0.0000	0.0000	0.0000	0.0000
NBP[1]736*	0.0000	0.0000	0.0000	0.0000	0.0000	0.0000
NBP[1]762*	0.0000	0.0000	0.0000	0.0000	0.0000	0.0000
NBP[1]788*	0.0000	0.0000	0.0000	0.0000	0.0000	0.0000

* Specified by user.

Material Stream: 9 (continued)

Fluid Package: Basis-1
Property Package: Peng-Robinson

COMPOSITION

Aqueous Phase (continued)

Phase Fraction 0.0000

COMPONENTS	MOLAR FLOW (kgmole/h)	MOLE FRACTION	MASS FLOW (tonne/d)	MASS FRACTION	LIQUID VOLUME FLOW (m3/h)	LIQUID VOLUME FRACTION
NBP[1]825*	0.0000	0.0000	0.0000	0.0000	0.0000	0.0000
NBP[1]873*	0.0000	0.0000	0.0000	0.0000	0.0000	0.0000
NBP[1]926*	0.0000	0.0000	0.0000	0.0000	0.0000	0.0000
NBP[1]978*	0.0000	0.0000	0.0000	0.0000	0.0000	0.0000
NBP[1]1021*	0.0000	0.0000	0.0000	0.0000	0.0000	0.0000
NBP[1]1075*	0.0000	0.0000	0.0000	0.0000	0.0000	0.0000
NBP[1]1123*	0.0000	0.0000	0.0000	0.0000	0.0000	0.0000
NBP[1]1173*	0.0000	0.0000	0.0000	0.0000	0.0000	0.0000
NBP[1]1250*	0.0000	0.0000	0.0000	0.0000	0.0000	0.0000
NBP[1]1339*	0.0000	0.0000	0.0000	0.0000	0.0000	0.0000
NBP[1]1432*	0.0000	0.0000	0.0000	0.0000	0.0000	0.0000
NBP[1]1528*	0.0000	0.0000	0.0000	0.0000	0.0000	0.0000
NBP[1]1637*	0.0000	0.0000	0.0000	0.0000	0.0000	0.0000
NBP[1]1732*	0.0000	0.0000	0.0000	0.0000	0.0000	0.0000
NBP[1]1819*	0.0000	0.0000	0.0000	0.0000	0.0000	0.0000
NBP[1]1913*	0.0000	0.0000	0.0000	0.0000	0.0000	0.0000
Total	0.0000	1.0000	0.0000	1.0000	0.0000	1.0000

Material Stream: 10

Fluid Package: Basis-1
Property Package: Peng-Robinson

CONDITIONS

		Overall	Vapour Phase	Liquid Phase	Liquid Phase
Vapour / Phase Fraction		0.4687	0.4687	0.0094	0.5219
Temperature:	(F)	162.5	162.5	162.5	162.5
Pressure:	(psig)	20.00 *	20.00	20.00	20.00
Molar Flow	(MMSCFD)	0.2793	0.1309	2.634e-003	0.1458
Mass Flow	(tonne/d)	44.97	5.562	2.235	37.17
Std Ideal Liq Vol Flow	(barrel/day)	367.9	74.16	13.98	279.8
Molar Enthalpy	(kJ/kgmole)	-2.936e+005	-1.062e+005	-1.455e+006	-4.410e+005
Molar Entropy	(kJ/kgmole-C)	311.8	191.5	1700	394.8
Heat Flow	(MMBtu/hr)	-3.872	-0.6561	-0.1810	-3.035
Liq Vol Flow @Std Cond	(barrel/day)	353.5 *	86.98	14.20	279.2

PROPERTIES

		Overall	Vapour Phase	Liquid Phase	Liquid Phase
Molecular Weight		134.7	35.54	709.9	213.3
Molar Density	(kgmole/m3)	0.1757	8.454e-002	1.345	3.723
Mass Density	(kg/m3)	23.66	3.005	954.5	794.1
Act. Volume Flow	(barrel/day)	1.195e+004	1.164e+004	14.73	294.4
Mass Enthalpy	(kJ/kg)	-2181	-2987	-2050	-2068
Mass Entropy	(kJ/kg-C)	2.315	5.387	2.395	1.851
Heat Capacity	(kJ/kgmole-C)	282.5	68.92	1463	453.0
Mass Heat Capacity	(kJ/kg-C)	2.098	1.939	2.061	2.124
LHV Molar Basis (Std)	(Btu/SCF)	---	---	---	---
LHV Mass Basis (Std)	(kJ/kg)	---	---	---	---
Phase Fraction [Vol. Basis]		0.2016	0.2016	3.800e-002	0.7604
Phase Fraction [Mass Basis]		0.1237	0.1237	4.970e-002	0.8266
Partial Pressure of CO2	(psig)	-13.40	---	---	---
Cost Based on Flow	(Cost/s)	0.0000	0.0000	0.0000	0.0000
Act. Gas Flow	(ACT_m3/h)	77.13	77.13	---	---
Avg. Liq. Density	(kgmole/m3)	5.708	13.27	1.416	3.918
Specific Heat	(kJ/kgmole-C)	282.5	68.92	1463	453.0
Std. Gas Flow	(STD_m3/h)	329.0	154.2	3.102	171.7

* Specified by user.

Material Stream: 10 (continued)

Fluid Package: Basis-1
Property Package: Peng-Robinson

PROPERTIES

	Overall	Vapour Phase	Liquid Phase	Liquid Phase
Std. Ideal Liq. Mass Density (kg/m3)	768.7	471.8	1005	835.6
Act. Liq. Flow (barrel/day)	309.1	---	14.73	294.4
Z Factor	---	0.9846	6.190e-002	2.236e-002
Watson K	11.89	14.89	11.95	11.85
User Property	---	---	---	---
Partial Pressure of H2S (psig)	-14.70	---	---	---
Cp/(Cp - R)	1.030	1.137	1.006	1.019
Cp/Cv	1.015	1.147	1.185	1.019
Heat of Vap. (kJ/kgmole)	2.920e+005	---	---	---
Kinematic Viscosity (cSt)	---	3.879	358.1	1.885
Liq. Mass Density (Std. Cond) (kg/m3)	800.0	402.2	990.1	837.5
Liq. Vol. Flow (Std. Cond) (barrel/day)	353.5	86.98	14.20	279.2
Liquid Fraction	0.5313	0.0000	1.000	1.000
Molar Volume (m3/kgmole)	5.691	11.83	0.7437	0.2686
Mass Heat of Vap. (kJ/kg)	2169	---	---	---
Phase Fraction [Molar Basis]	0.4687	0.4687	0.0094	0.5219
Surface Tension (dyne/cm)	---	---	24.12	20.89
Thermal Conductivity (W/m-K)	---	2.859e-002	0.1313	0.1112
Viscosity (cP)	---	1.166e-002	341.8	1.497
Cv (Semi-Ideal) (kJ/kgmole-C)	274.2	60.60	1455	---
Mass Cv (Semi-Ideal) (kJ/kg-C)	2.036	1.705	2.050	---
Cv (kJ/kgmole-C)	278.3	60.07	1235	---
Mass Cv (kJ/kg-C)	2.067	1.690	1.739	---
Cv (Ent. Method) (kJ/kgmole-C)	---	---	1336	---
Mass Cv (Ent. Method) (kJ/kg-C)	---	---	1.881	---
Cp/Cv (Ent. Method)	---	---	1.096	---
Reid VP at 37.8 C (psig)	151.1	854.6	-10.47	-7.757
True VP at 37.8 C (psig)	970.9	1708	11.02	9.173
Liq. Vol. Flow - Sum(Std. Cond) (barrel/day)	101.2	86.98	14.20	0.0000
HHV Molar Basis (Std) (Btu/SCF)	---	---	---	---
HHV Mass Basis (Std) (kJ/kg)	---	---	---	---
CO2 Loading	---	---	---	---
CO2 App ML Con (kgmole/m3)	---	---	1.359e-003	2.952e-003
CO2 App WT Con (kgmol/kg)	---	---	1.424e-006	3.718e-006
Phase Fraction [Act. Vol. Basis]	0.9741	0.9741	1.232e-003	2.463e-002
Mass Exergy (kJ/kg)	14.74	---	---	---
Viscosity Index	23.76	---	---	---
Ideal Gas Cp/Cv	1.036	1.139	1.007	1.023
Ideal Gas Cp (kJ/kgmole-C)	239.1	68.31	1249	374.3
Mass Ideal Gas Cp (kJ/kg-C)	1.776	1.922	1.759	1.755
Bubble Point Pressure (psig)	1180	---	---	---

COMPOSITION

Overall Phase

Vapour Fraction 0.4687

COMPONENTS	MOLAR FLOW (kgmole/h)	MOLE FRACTION	MASS FLOW (tonne/d)	MASS FRACTION	LIQUID VOLUME FLOW (m3/h)	LIQUID VOLUME FRACTION
Methane	2.9680	0.2133	1.1428	0.0254	0.1590	0.0653
Ethane	0.9898	0.0711	0.7143	0.0159	0.0837	0.0343
Propane	0.9969	0.0717	1.0551	0.0235	0.0868	0.0356
i-Butane	0.2099	0.0151	0.2929	0.0065	0.0217	0.0089
n-Butane	0.4797	0.0345	0.6692	0.0149	0.0478	0.0196
i-Pentane	0.1582	0.0114	0.2739	0.0061	0.0183	0.0075
n-Pentane	0.2009	0.0144	0.3479	0.0077	0.0230	0.0094
n-Hexane	0.4893	0.0352	1.0120	0.0225	0.0636	0.0261
Nitrogen	0.0456	0.0033	0.0307	0.0007	0.0016	0.0007
CO2	0.2490	0.0179	0.2630	0.0058	0.0133	0.0054

* Specified by user.

Material Stream: 10 (continued)

Fluid Package: Basis-1
Property Package: Peng-Robinson

COMPOSITION

Overall Phase (continued)

Vapour Fraction 0.4687

COMPONENTS	MOLAR FLOW (kgmole/h)	MOLE FRACTION	MASS FLOW (tonne/d)	MASS FRACTION	LIQUID VOLUME FLOW (m3/h)	LIQUID VOLUME FRACTION
H2S	0.0000	0.0000	0.0000	0.0000	0.0000	0.0000
H2O	0.0638	0.0046	0.0276	0.0006	0.0012	0.0005
NBP[1]95*	0.0609	0.0044	0.0994	0.0022	0.0061	0.0025
NBP[1]121*	0.0868	0.0062	0.1518	0.0034	0.0092	0.0038
NBP[1]147*	0.1345	0.0097	0.2589	0.0058	0.0154	0.0063
NBP[1]171*	0.3052	0.0219	0.6423	0.0143	0.0376	0.0154
NBP[1]195*	0.4692	0.0337	1.0536	0.0234	0.0610	0.0250
NBP[1]222*	0.4143	0.0298	1.0008	0.0223	0.0572	0.0235
NBP[1]248*	0.3971	0.0285	1.0312	0.0229	0.0582	0.0239
NBP[1]273*	0.3602	0.0259	1.0003	0.0222	0.0558	0.0229
NBP[1]299*	0.3105	0.0223	0.9193	0.0204	0.0508	0.0208
NBP[1]325*	0.2436	0.0175	0.7664	0.0170	0.0419	0.0172
NBP[1]351*	0.2104	0.0151	0.7035	0.0156	0.0381	0.0156
NBP[1]377*	0.2019	0.0145	0.7201	0.0160	0.0386	0.0158
NBP[1]402*	0.1916	0.0138	0.7287	0.0162	0.0387	0.0159
NBP[1]428*	0.1868	0.0134	0.7579	0.0169	0.0398	0.0163
NBP[1]454*	0.1895	0.0136	0.8215	0.0183	0.0427	0.0175
NBP[1]480*	0.1942	0.0140	0.8996	0.0200	0.0463	0.0190
NBP[1]505*	0.1895	0.0136	0.9362	0.0208	0.0478	0.0196
NBP[1]531*	0.1837	0.0132	0.9662	0.0215	0.0488	0.0200
NBP[1]557*	0.1775	0.0128	0.9930	0.0221	0.0498	0.0204
NBP[1]582*	0.1701	0.0122	1.0102	0.0225	0.0502	0.0206
NBP[1]608*	0.1640	0.0118	1.0333	0.0230	0.0509	0.0209
NBP[1]634*	0.1609	0.0116	1.0743	0.0239	0.0525	0.0215
NBP[1]659*	0.1585	0.0114	1.1188	0.0249	0.0542	0.0223
NBP[1]685*	0.1641	0.0118	1.2224	0.0272	0.0588	0.0241
NBP[1]711*	0.1715	0.0123	1.3442	0.0299	0.0642	0.0263
NBP[1]736*	0.1697	0.0122	1.3914	0.0309	0.0659	0.0270
NBP[1]762*	0.1653	0.0119	1.4214	0.0316	0.0669	0.0274
NBP[1]788*	0.1585	0.0114	1.4423	0.0321	0.0674	0.0276
NBP[1]825*	0.2655	0.0191	2.5963	0.0577	0.1201	0.0493
NBP[1]873*	0.1830	0.0132	1.9404	0.0432	0.0887	0.0364
NBP[1]926*	0.1437	0.0103	1.6472	0.0366	0.0744	0.0305
NBP[1]978*	0.1474	0.0106	1.8524	0.0412	0.0825	0.0338
NBP[1]1021*	0.0728	0.0052	0.9655	0.0215	0.0426	0.0175
NBP[1]1075*	0.0449	0.0032	0.6310	0.0140	0.0276	0.0113
NBP[1]1123*	0.0417	0.0030	0.6267	0.0139	0.0271	0.0111
NBP[1]1173*	0.0300	0.0022	0.4772	0.0106	0.0205	0.0084
NBP[1]1250*	0.0393	0.0028	0.6767	0.0150	0.0287	0.0118
NBP[1]1339*	0.0364	0.0026	0.6999	0.0156	0.0291	0.0120
NBP[1]1432*	0.0257	0.0018	0.5397	0.0120	0.0221	0.0091
NBP[1]1528*	0.0180	0.0013	0.4082	0.0091	0.0165	0.0068
NBP[1]1637*	0.0127	0.0009	0.3047	0.0068	0.0122	0.0050
NBP[1]1732*	0.0101	0.0007	0.2564	0.0057	0.0101	0.0042
NBP[1]1819*	0.0002	0.0000	0.0045	0.0001	0.0002	0.0001
NBP[1]1913*	0.0000	0.0000	0.0000	0.0000	0.0000	0.0000
Total	13.9126	1.0000	44.9650	1.0000	2.4372	1.0000

Vapour Phase

Phase Fraction 0.4687

COMPONENTS	MOLAR FLOW (kgmole/h)	MOLE FRACTION	MASS FLOW (tonne/d)	MASS FRACTION	LIQUID VOLUME FLOW (m3/h)	LIQUID VOLUME FRACTION
Methane	2.9377	0.4505	1.1311	0.2033	0.1574	0.3204
Ethane	0.9534	0.1462	0.6880	0.1237	0.0806	0.1641
Propane	0.9027	0.1384	0.9554	0.1718	0.0786	0.1599

* Specified by user.

Material Stream: 10 (continued)

Fluid Package: Basis-1
Property Package: Peng-Robinson

COMPOSITION

Vapour Phase (continued)

Phase Fraction 0.4687

COMPONENTS	MOLAR FLOW (kgmole/h)	MOLE FRACTION	MASS FLOW (tonne/d)	MASS FRACTION	LIQUID VOLUME FLOW (m3/h)	LIQUID VOLUME FRACTION
i-Butane	0.1716	0.0263	0.2394	0.0430	0.0178	0.0361
n-Butane	0.3726	0.0571	0.5198	0.0935	0.0371	0.0756
i-Pentane	0.0978	0.0150	0.1693	0.0304	0.0113	0.0230
n-Pentane	0.1141	0.0175	0.1976	0.0355	0.0131	0.0266
n-Hexane	0.1648	0.0253	0.3408	0.0613	0.0214	0.0436
Nitrogen	0.0454	0.0070	0.0305	0.0055	0.0016	0.0032
CO2	0.2431	0.0373	0.2568	0.0462	0.0130	0.0264
H2S	0.0000	0.0000	0.0000	0.0000	0.0000	0.0000
H2O	0.0622	0.0095	0.0269	0.0048	0.0011	0.0023
NBP[1]95*	0.0347	0.0053	0.0565	0.0102	0.0035	0.0071
NBP[1]121*	0.0412	0.0063	0.0721	0.0130	0.0044	0.0089
NBP[1]147*	0.0507	0.0078	0.0976	0.0175	0.0058	0.0118
NBP[1]171*	0.0886	0.0136	0.1864	0.0335	0.0109	0.0222
NBP[1]195*	0.1007	0.0154	0.2260	0.0406	0.0131	0.0266
NBP[1]222*	0.0592	0.0091	0.1429	0.0257	0.0082	0.0166
NBP[1]248*	0.0371	0.0057	0.0962	0.0173	0.0054	0.0111
NBP[1]273*	0.0213	0.0033	0.0592	0.0106	0.0033	0.0067
NBP[1]299*	0.0113	0.0017	0.0335	0.0060	0.0018	0.0038
NBP[1]325*	0.0052	0.0008	0.0165	0.0030	0.0009	0.0018
NBP[1]351*	0.0026	0.0004	0.0087	0.0016	0.0005	0.0010
NBP[1]377*	0.0014	0.0002	0.0049	0.0009	0.0003	0.0005
NBP[1]402*	0.0007	0.0001	0.0027	0.0005	0.0001	0.0003
NBP[1]428*	0.0004	0.0001	0.0015	0.0003	0.0001	0.0002
NBP[1]454*	0.0002	0.0000	0.0009	0.0002	0.0000	0.0001
NBP[1]480*	0.0001	0.0000	0.0005	0.0001	0.0000	0.0000
NBP[1]505*	0.0001	0.0000	0.0002	0.0000	0.0000	0.0000
NBP[1]531*	0.0000	0.0000	0.0001	0.0000	0.0000	0.0000
NBP[1]557*	0.0000	0.0000	0.0001	0.0000	0.0000	0.0000
NBP[1]582*	0.0000	0.0000	0.0000	0.0000	0.0000	0.0000
NBP[1]608*	0.0000	0.0000	0.0000	0.0000	0.0000	0.0000
NBP[1]634*	0.0000	0.0000	0.0000	0.0000	0.0000	0.0000
NBP[1]659*	0.0000	0.0000	0.0000	0.0000	0.0000	0.0000
NBP[1]685*	0.0000	0.0000	0.0000	0.0000	0.0000	0.0000
NBP[1]711*	0.0000	0.0000	0.0000	0.0000	0.0000	0.0000
NBP[1]736*	0.0000	0.0000	0.0000	0.0000	0.0000	0.0000
NBP[1]762*	0.0000	0.0000	0.0000	0.0000	0.0000	0.0000
NBP[1]788*	0.0000	0.0000	0.0000	0.0000	0.0000	0.0000
NBP[1]825*	0.0000	0.0000	0.0000	0.0000	0.0000	0.0000
NBP[1]873*	0.0000	0.0000	0.0000	0.0000	0.0000	0.0000
NBP[1]926*	0.0000	0.0000	0.0000	0.0000	0.0000	0.0000
NBP[1]978*	0.0000	0.0000	0.0000	0.0000	0.0000	0.0000
NBP[1]1021*	0.0000	0.0000	0.0000	0.0000	0.0000	0.0000
NBP[1]1075*	0.0000	0.0000	0.0000	0.0000	0.0000	0.0000
NBP[1]1123*	0.0000	0.0000	0.0000	0.0000	0.0000	0.0000
NBP[1]1173*	0.0000	0.0000	0.0000	0.0000	0.0000	0.0000
NBP[1]1250*	0.0000	0.0000	0.0000	0.0000	0.0000	0.0000
NBP[1]1339*	0.0000	0.0000	0.0000	0.0000	0.0000	0.0000
NBP[1]1432*	0.0000	0.0000	0.0000	0.0000	0.0000	0.0000
NBP[1]1528*	0.0000	0.0000	0.0000	0.0000	0.0000	0.0000
NBP[1]1637*	0.0000	0.0000	0.0000	0.0000	0.0000	0.0000
NBP[1]1732*	0.0000	0.0000	0.0000	0.0000	0.0000	0.0000
NBP[1]1819*	0.0000	0.0000	0.0000	0.0000	0.0000	0.0000
NBP[1]1913*	0.0000	0.0000	0.0000	0.0000	0.0000	0.0000
Total	6.5208	1.0000	5.5623	1.0000	0.4913	1.0000

* Specified by user.

Material Stream: 10 (continued)

Fluid Package: Basis-1
Property Package: Peng-Robinson

COMPOSITION

Liquid Phase

Phase Fraction 9.429e-003

COMPONENTS	MOLAR FLOW (kgmole/h)	MOLE FRACTION	MASS FLOW (tonne/d)	MASS FRACTION	LIQUID VOLUME FLOW (m3/h)	LIQUID VOLUME FRACTION
Methane	0.0007	0.0053	0.0003	0.0001	0.0000	0.0004
Ethane	0.0006	0.0044	0.0004	0.0002	0.0000	0.0005
Propane	0.0012	0.0091	0.0013	0.0006	0.0001	0.0011
i-Butane	0.0004	0.0033	0.0006	0.0003	0.0000	0.0005
n-Butane	0.0011	0.0084	0.0015	0.0007	0.0001	0.0012
i-Pentane	0.0006	0.0042	0.0010	0.0004	0.0001	0.0007
n-Pentane	0.0008	0.0057	0.0013	0.0006	0.0001	0.0009
n-Hexane	0.0024	0.0184	0.0050	0.0022	0.0003	0.0034
Nitrogen	0.0000	0.0001	0.0000	0.0000	0.0000	0.0000
CO2	0.0001	0.0010	0.0001	0.0001	0.0000	0.0001
H2S	0.0000	0.0000	0.0000	0.0000	0.0000	0.0000
H2O	0.0000	0.0003	0.0000	0.0000	0.0000	0.0000
NBP[1]95*	0.0002	0.0017	0.0004	0.0002	0.0000	0.0002
NBP[1]121*	0.0004	0.0027	0.0006	0.0003	0.0000	0.0004
NBP[1]147*	0.0006	0.0046	0.0012	0.0005	0.0001	0.0007
NBP[1]171*	0.0015	0.0111	0.0031	0.0014	0.0002	0.0019
NBP[1]195*	0.0023	0.0176	0.0052	0.0023	0.0003	0.0032
NBP[1]222*	0.0021	0.0158	0.0050	0.0022	0.0003	0.0031
NBP[1]248*	0.0020	0.0150	0.0051	0.0023	0.0003	0.0031
NBP[1]273*	0.0017	0.0132	0.0048	0.0022	0.0003	0.0029
NBP[1]299*	0.0014	0.0109	0.0043	0.0019	0.0002	0.0025
NBP[1]325*	0.0011	0.0082	0.0034	0.0015	0.0002	0.0020
NBP[1]351*	0.0009	0.0067	0.0029	0.0013	0.0002	0.0017
NBP[1]377*	0.0008	0.0060	0.0028	0.0013	0.0002	0.0016
NBP[1]402*	0.0007	0.0054	0.0027	0.0012	0.0001	0.0015
NBP[1]428*	0.0006	0.0049	0.0026	0.0012	0.0001	0.0015
NBP[1]454*	0.0006	0.0047	0.0027	0.0012	0.0001	0.0015
NBP[1]480*	0.0006	0.0045	0.0027	0.0012	0.0001	0.0015
NBP[1]505*	0.0005	0.0042	0.0027	0.0012	0.0001	0.0015
NBP[1]531*	0.0005	0.0038	0.0026	0.0012	0.0001	0.0014
NBP[1]557*	0.0005	0.0035	0.0025	0.0011	0.0001	0.0014
NBP[1]582*	0.0004	0.0031	0.0024	0.0011	0.0001	0.0013
NBP[1]608*	0.0004	0.0029	0.0024	0.0011	0.0001	0.0013
NBP[1]634*	0.0004	0.0027	0.0024	0.0011	0.0001	0.0012
NBP[1]659*	0.0003	0.0025	0.0023	0.0011	0.0001	0.0012
NBP[1]685*	0.0003	0.0025	0.0025	0.0011	0.0001	0.0013
NBP[1]711*	0.0003	0.0025	0.0026	0.0012	0.0001	0.0013
NBP[1]736*	0.0003	0.0025	0.0026	0.0012	0.0001	0.0014
NBP[1]762*	0.0003	0.0024	0.0027	0.0012	0.0001	0.0014
NBP[1]788*	0.0003	0.0023	0.0027	0.0012	0.0001	0.0014
NBP[1]825*	0.0005	0.0039	0.0050	0.0022	0.0002	0.0025
NBP[1]873*	0.0004	0.0030	0.0041	0.0019	0.0002	0.0020
NBP[1]926*	0.0004	0.0028	0.0042	0.0019	0.0002	0.0021
NBP[1]978*	0.0005	0.0035	0.0058	0.0026	0.0003	0.0028
NBP[1]1021*	0.0003	0.0024	0.0042	0.0019	0.0002	0.0020
NBP[1]1075*	0.0003	0.0026	0.0048	0.0021	0.0002	0.0023
NBP[1]1123*	0.0006	0.0042	0.0083	0.0037	0.0004	0.0039
NBP[1]1173*	0.0009	0.0069	0.0145	0.0065	0.0006	0.0067
NBP[1]1250*	0.0060	0.0461	0.1041	0.0466	0.0044	0.0476
NBP[1]1339*	0.0249	0.1901	0.4796	0.2146	0.0200	0.2156
NBP[1]1432*	0.0254	0.1940	0.5350	0.2394	0.0219	0.2368
NBP[1]1528*	0.0180	0.1374	0.4082	0.1827	0.0165	0.1783
NBP[1]1637*	0.0127	0.0965	0.3047	0.1363	0.0122	0.1315
NBP[1]1732*	0.0101	0.0771	0.2564	0.1147	0.0101	0.1094

* Specified by user.

Material Stream: 10 (continued)

Fluid Package: Basis-1
Property Package: Peng-Robinson

COMPOSITION

Liquid Phase (continued)

Phase Fraction 9.429e-003

COMPONENTS	MOLAR FLOW (kgmole/h)	MOLE FRACTION	MASS FLOW (tonne/d)	MASS FRACTION	LIQUID VOLUME FLOW (m3/h)	LIQUID VOLUME FRACTION
NBP[1]1819*	0.0002	0.0013	0.0045	0.0020	0.0002	0.0019
NBP[1]1913*	0.0000	0.0000	0.0000	0.0000	0.0000	0.0000
Total	0.1312	1.0000	2.2349	1.0000	0.0926	1.0000

Liquid Phase

Phase Fraction 0.5219

COMPONENTS	MOLAR FLOW (kgmole/h)	MOLE FRACTION	MASS FLOW (tonne/d)	MASS FRACTION	LIQUID VOLUME FLOW (m3/h)	LIQUID VOLUME FRACTION
Methane	0.0297	0.0041	0.0114	0.0003	0.0016	0.0009
Ethane	0.0359	0.0049	0.0259	0.0007	0.0030	0.0016
Propane	0.0930	0.0128	0.0984	0.0026	0.0081	0.0044
i-Butane	0.0379	0.0052	0.0528	0.0014	0.0039	0.0021
n-Butane	0.1060	0.0146	0.1478	0.0040	0.0106	0.0057
i-Pentane	0.0599	0.0082	0.1037	0.0028	0.0069	0.0037
n-Pentane	0.0860	0.0118	0.1489	0.0040	0.0099	0.0053
n-Hexane	0.3221	0.0444	0.6662	0.0179	0.0419	0.0226
Nitrogen	0.0002	0.0000	0.0001	0.0000	0.0000	0.0000
CO2	0.0058	0.0008	0.0061	0.0002	0.0003	0.0002
H2S	0.0000	0.0000	0.0000	0.0000	0.0000	0.0000
H2O	0.0016	0.0002	0.0007	0.0000	0.0000	0.0000
NBP[1]95*	0.0260	0.0036	0.0425	0.0011	0.0026	0.0014
NBP[1]121*	0.0452	0.0062	0.0791	0.0021	0.0048	0.0026
NBP[1]147*	0.0832	0.0115	0.1601	0.0043	0.0095	0.0051
NBP[1]171*	0.2152	0.0296	0.4528	0.0122	0.0265	0.0143
NBP[1]195*	0.3662	0.0504	0.8224	0.0221	0.0476	0.0257
NBP[1]222*	0.3531	0.0486	0.8528	0.0229	0.0487	0.0263
NBP[1]248*	0.3580	0.0493	0.9298	0.0250	0.0525	0.0283
NBP[1]273*	0.3371	0.0464	0.9363	0.0252	0.0523	0.0282
NBP[1]299*	0.2977	0.0410	0.8816	0.0237	0.0487	0.0263
NBP[1]325*	0.2373	0.0327	0.7466	0.0201	0.0408	0.0220
NBP[1]351*	0.2069	0.0285	0.6919	0.0186	0.0375	0.0202
NBP[1]377*	0.1998	0.0275	0.7124	0.0192	0.0382	0.0206
NBP[1]402*	0.1902	0.0262	0.7233	0.0195	0.0384	0.0207
NBP[1]428*	0.1858	0.0256	0.7537	0.0203	0.0396	0.0214
NBP[1]454*	0.1886	0.0260	0.8179	0.0220	0.0425	0.0229
NBP[1]480*	0.1935	0.0266	0.8964	0.0241	0.0461	0.0249
NBP[1]505*	0.1889	0.0260	0.9332	0.0251	0.0476	0.0257
NBP[1]531*	0.1832	0.0252	0.9635	0.0259	0.0487	0.0263
NBP[1]557*	0.1771	0.0244	0.9904	0.0266	0.0496	0.0268
NBP[1]582*	0.1697	0.0234	1.0078	0.0271	0.0501	0.0270
NBP[1]608*	0.1636	0.0225	1.0309	0.0277	0.0508	0.0274
NBP[1]634*	0.1606	0.0221	1.0719	0.0288	0.0524	0.0283
NBP[1]659*	0.1582	0.0218	1.1165	0.0300	0.0541	0.0292
NBP[1]685*	0.1637	0.0226	1.2199	0.0328	0.0587	0.0317
NBP[1]711*	0.1712	0.0236	1.3416	0.0361	0.0640	0.0346
NBP[1]736*	0.1694	0.0233	1.3888	0.0374	0.0658	0.0355
NBP[1]762*	0.1650	0.0227	1.4187	0.0382	0.0667	0.0360
NBP[1]788*	0.1582	0.0218	1.4396	0.0387	0.0672	0.0363
NBP[1]825*	0.2649	0.0365	2.5912	0.0697	0.1199	0.0647
NBP[1]873*	0.1826	0.0251	1.9363	0.0521	0.0886	0.0478
NBP[1]926*	0.1434	0.0197	1.6429	0.0442	0.0743	0.0401
NBP[1]978*	0.1469	0.0202	1.8467	0.0497	0.0822	0.0444
NBP[1]1021*	0.0725	0.0100	0.9613	0.0259	0.0425	0.0229
NBP[1]1075*	0.0446	0.0061	0.6262	0.0168	0.0274	0.0148
NBP[1]1123*	0.0412	0.0057	0.6184	0.0166	0.0268	0.0144

* Specified by user.

Material Stream: 10 (continued)

Fluid Package: Basis-1
Property Package: Peng-Robinson

COMPOSITION

Liquid Phase (continued)

Phase Fraction 0.5219

COMPONENTS	MOLAR FLOW (kgmole/h)	MOLE FRACTION	MASS FLOW (tonne/d)	MASS FRACTION	LIQUID VOLUME FLOW (m3/h)	LIQUID VOLUME FRACTION
NBP[1]1173*	0.0291	0.0040	0.4627	0.0124	0.0199	0.0107
NBP[1]1250*	0.0333	0.0046	0.5726	0.0154	0.0243	0.0131
NBP[1]1339*	0.0115	0.0016	0.2203	0.0059	0.0092	0.0049
NBP[1]1432*	0.0002	0.0000	0.0048	0.0001	0.0002	0.0001
NBP[1]1528*	0.0000	0.0000	0.0000	0.0000	0.0000	0.0000
NBP[1]1637*	0.0000	0.0000	0.0000	0.0000	0.0000	0.0000
NBP[1]1732*	0.0000	0.0000	0.0000	0.0000	0.0000	0.0000
NBP[1]1819*	0.0000	0.0000	0.0000	0.0000	0.0000	0.0000
NBP[1]1913*	0.0000	0.0000	0.0000	0.0000	0.0000	0.0000
Total	7.2606	1.0000	37.1678	1.0000	1.8533	1.0000

Material Stream: 11

Fluid Package: Basis-1
Property Package: Peng-Robinson

CONDITIONS

		Overall	Vapour Phase	Liquid Phase	Liquid Phase
Vapour / Phase Fraction		1.0000	1.0000	0.0000	0.0000
Temperature:	(F)	162.5	162.5	162.5	162.5
Pressure:	(psig)	20.00	20.00	20.00	20.00
Molar Flow	(MMSCFD)	0.1309	0.1309	0.0000	0.0000
Mass Flow	(tonne/d)	5.562	5.562	0.0000	0.0000
Std Ideal Liq Vol Flow	(barrel/day)	74.16	74.16	0.0000	0.0000
Molar Enthalpy	(kJ/kgmole)	-1.062e+005	-1.062e+005	-1.455e+006	-4.410e+005
Molar Entropy	(kJ/kgmole-C)	191.5	191.5	1700	394.8
Heat Flow	(MMBtu/hr)	-0.6561	-0.6561	0.0000	0.0000
Liq Vol Flow @Std Cond	(barrel/day)	86.98 *	86.98	0.0000	0.0000

PROPERTIES

		Overall	Vapour Phase	Liquid Phase	Liquid Phase
Molecular Weight		35.54	35.54	709.9	213.3
Molar Density	(kgmole/m3)	8.454e-002	8.454e-002	1.345	3.723
Mass Density	(kg/m3)	3.005	3.005	954.5	794.1
Act. Volume Flow	(barrel/day)	1.164e+004	1.164e+004	0.0000	0.0000
Mass Enthalpy	(kJ/kg)	-2987	-2987	-2050	-2068
Mass Entropy	(kJ/kg-C)	5.387	5.387	2.395	1.851
Heat Capacity	(kJ/kgmole-C)	68.92	68.92	1463	453.0
Mass Heat Capacity	(kJ/kg-C)	1.939	1.939	2.061	2.124
LHV Molar Basis (Std)	(Btu/SCF)	---	---	---	---
LHV Mass Basis (Std)	(kJ/kg)	---	---	---	---
Phase Fraction [Vol. Basis]		1.000	1.000	---	---
Phase Fraction [Mass Basis]		1.000	1.000	0.0000	0.0000
Partial Pressure of CO2	(psig)	-13.40	---	---	---
Cost Based on Flow	(Cost/s)	0.0000	0.0000	0.0000	0.0000
Act. Gas Flow	(ACT_m3/h)	77.13	77.13	---	---
Avg. Liq. Density	(kgmole/m3)	13.27	13.27	1.416	3.918
Specific Heat	(kJ/kgmole-C)	68.92	68.92	1463	453.0
Std. Gas Flow	(STD_m3/h)	154.2	154.2	0.0000	0.0000
Std. Ideal Liq. Mass Density	(kg/m3)	471.8	471.8	1005	835.6
Act. Liq. Flow	(barrel/day)	0.0000	---	---	0.0000
Z Factor		---	0.9846	6.190e-002	2.236e-002
Watson K		14.89	14.89	11.95	11.85
User Property		---	---	---	---
Partial Pressure of H2S	(psig)	-14.70	---	---	---
Cp/(Cp - R)		1.137	1.137	1.006	1.019

* Specified by user.

Material Stream: 11 (continued)

Fluid Package: Basis-1
Property Package: Peng-Robinson

PROPERTIES

	Overall	Vapour Phase	Liquid Phase	Liquid Phase
Cp/Cv	1.147	1.147	1.185	1.019
Heat of Vap. (kJ/kgmole)	2.895e+004	---	---	---
Kinematic Viscosity (cSt)	3.879	3.879	358.1	1.885
Liq. Mass Density (Std. Cond) (kg/m3)	402.2	402.2	990.1	837.5
Liq. Vol. Flow (Std. Cond) (barrel/day)	86.98	86.98	0.0000	0.0000
Liquid Fraction	0.0000	0.0000	1.000	1.000
Molar Volume (m3/kgmole)	11.83	11.83	0.7437	0.2686
Mass Heat of Vap. (kJ/kg)	814.5	---	---	---
Phase Fraction [Molar Basis]	1.0000	1.0000	0.0000	0.0000
Surface Tension (dyne/cm)	---	---	24.12	20.89
Thermal Conductivity (W/m-K)	2.859e-002	2.859e-002	0.1313	0.1112
Viscosity (cP)	1.166e-002	1.166e-002	341.8	1.497
Cv (Semi-Ideal) (kJ/kgmole-C)	60.60	60.60	1455	---
Mass Cv (Semi-Ideal) (kJ/kg-C)	1.705	1.705	2.050	---
Cv (kJ/kgmole-C)	60.07	60.07	1235	---
Mass Cv (kJ/kg-C)	1.690	1.690	1.739	---
Cv (Ent. Method) (kJ/kgmole-C)	---	---	1336	---
Mass Cv (Ent. Method) (kJ/kg-C)	---	---	1.882	---
Cp/Cv (Ent. Method)	---	---	1.095	---
Reid VP at 37.8 C (psig)	854.6	854.6	-10.47	-7.757
True VP at 37.8 C (psig)	1708	1708	11.02	9.173
Liq. Vol. Flow - Sum(Std. Cond) (barrel/day)	86.98	86.98	0.0000	0.0000
HHV Molar Basis (Std) (Btu/SCF)	---	---	---	---
HHV Mass Basis (Std) (kJ/kg)	---	---	---	---
CO2 Loading	---	---	---	---
CO2 App ML Con (kgmole/m3)	---	---	---	---
CO2 App WT Con (kgmol/kg)	---	---	---	---
Phase Fraction [Act. Vol. Basis]	1.000	1.000	0.0000	0.0000
Mass Exergy (kJ/kg)	65.78	---	---	---
Viscosity Index	-0.6538	---	---	---
Ideal Gas Cp/Cv	1.139	1.139	1.007	1.023
Ideal Gas Cp (kJ/kgmole-C)	68.31	68.31	1249	374.3
Mass Ideal Gas Cp (kJ/kg-C)	1.922	1.922	1.759	1.755
Bubble Point Pressure (psig)	1878	---	---	---

COMPOSITION

Overall Phase

Vapour Fraction 1.0000

COMPONENTS	MOLAR FLOW (kgmole/h)	MOLE FRACTION	MASS FLOW (tonne/d)	MASS FRACTION	LIQUID VOLUME FLOW (m3/h)	LIQUID VOLUME FRACTION
Methane	2.9377	0.4505	1.1311	0.2033	0.1574	0.3204
Ethane	0.9534	0.1462	0.6880	0.1237	0.0806	0.1641
Propane	0.9027	0.1384	0.9554	0.1718	0.0786	0.1599
i-Butane	0.1716	0.0263	0.2394	0.0430	0.0178	0.0361
n-Butane	0.3726	0.0571	0.5198	0.0935	0.0371	0.0756
i-Pentane	0.0978	0.0150	0.1693	0.0304	0.0113	0.0230
n-Pentane	0.1141	0.0175	0.1976	0.0355	0.0131	0.0266
n-Hexane	0.1648	0.0253	0.3408	0.0613	0.0214	0.0436
Nitrogen	0.0454	0.0070	0.0305	0.0055	0.0016	0.0032
CO2	0.2431	0.0373	0.2568	0.0462	0.0130	0.0264
H2S	0.0000	0.0000	0.0000	0.0000	0.0000	0.0000
H2O	0.0622	0.0095	0.0269	0.0048	0.0011	0.0023
NBP[1]95*	0.0347	0.0053	0.0565	0.0102	0.0035	0.0071
NBP[1]121*	0.0412	0.0063	0.0721	0.0130	0.0044	0.0089
NBP[1]147*	0.0507	0.0078	0.0976	0.0175	0.0058	0.0118
NBP[1]171*	0.0886	0.0136	0.1864	0.0335	0.0109	0.0222
NBP[1]195*	0.1007	0.0154	0.2260	0.0406	0.0131	0.0266

* Specified by user.

Material Stream: 11 (continued)

Fluid Package: Basis-1
Property Package: Peng-Robinson

COMPOSITION

Overall Phase (continued)

Vapour Fraction 1.0000

COMPONENTS	MOLAR FLOW (kgmole/h)	MOLE FRACTION	MASS FLOW (tonne/d)	MASS FRACTION	LIQUID VOLUME FLOW (m3/h)	LIQUID VOLUME FRACTION
NBP[1]222*	0.0592	0.0091	0.1429	0.0257	0.0082	0.0166
NBP[1]248*	0.0371	0.0057	0.0962	0.0173	0.0054	0.0111
NBP[1]273*	0.0213	0.0033	0.0592	0.0106	0.0033	0.0067
NBP[1]299*	0.0113	0.0017	0.0335	0.0060	0.0018	0.0038
NBP[1]325*	0.0052	0.0008	0.0165	0.0030	0.0009	0.0018
NBP[1]351*	0.0026	0.0004	0.0087	0.0016	0.0005	0.0010
NBP[1]377*	0.0014	0.0002	0.0049	0.0009	0.0003	0.0005
NBP[1]402*	0.0007	0.0001	0.0027	0.0005	0.0001	0.0003
NBP[1]428*	0.0004	0.0001	0.0015	0.0003	0.0001	0.0002
NBP[1]454*	0.0002	0.0000	0.0009	0.0002	0.0000	0.0001
NBP[1]480*	0.0001	0.0000	0.0005	0.0001	0.0000	0.0000
NBP[1]505*	0.0001	0.0000	0.0002	0.0000	0.0000	0.0000
NBP[1]531*	0.0000	0.0000	0.0001	0.0000	0.0000	0.0000
NBP[1]557*	0.0000	0.0000	0.0001	0.0000	0.0000	0.0000
NBP[1]582*	0.0000	0.0000	0.0000	0.0000	0.0000	0.0000
NBP[1]608*	0.0000	0.0000	0.0000	0.0000	0.0000	0.0000
NBP[1]634*	0.0000	0.0000	0.0000	0.0000	0.0000	0.0000
NBP[1]659*	0.0000	0.0000	0.0000	0.0000	0.0000	0.0000
NBP[1]685*	0.0000	0.0000	0.0000	0.0000	0.0000	0.0000
NBP[1]711*	0.0000	0.0000	0.0000	0.0000	0.0000	0.0000
NBP[1]736*	0.0000	0.0000	0.0000	0.0000	0.0000	0.0000
NBP[1]762*	0.0000	0.0000	0.0000	0.0000	0.0000	0.0000
NBP[1]788*	0.0000	0.0000	0.0000	0.0000	0.0000	0.0000
NBP[1]825*	0.0000	0.0000	0.0000	0.0000	0.0000	0.0000
NBP[1]873*	0.0000	0.0000	0.0000	0.0000	0.0000	0.0000
NBP[1]926*	0.0000	0.0000	0.0000	0.0000	0.0000	0.0000
NBP[1]978*	0.0000	0.0000	0.0000	0.0000	0.0000	0.0000
NBP[1]1021*	0.0000	0.0000	0.0000	0.0000	0.0000	0.0000
NBP[1]1075*	0.0000	0.0000	0.0000	0.0000	0.0000	0.0000
NBP[1]1123*	0.0000	0.0000	0.0000	0.0000	0.0000	0.0000
NBP[1]1173*	0.0000	0.0000	0.0000	0.0000	0.0000	0.0000
NBP[1]1250*	0.0000	0.0000	0.0000	0.0000	0.0000	0.0000
NBP[1]1339*	0.0000	0.0000	0.0000	0.0000	0.0000	0.0000
NBP[1]1432*	0.0000	0.0000	0.0000	0.0000	0.0000	0.0000
NBP[1]1528*	0.0000	0.0000	0.0000	0.0000	0.0000	0.0000
NBP[1]1637*	0.0000	0.0000	0.0000	0.0000	0.0000	0.0000
NBP[1]1732*	0.0000	0.0000	0.0000	0.0000	0.0000	0.0000
NBP[1]1819*	0.0000	0.0000	0.0000	0.0000	0.0000	0.0000
NBP[1]1913*	0.0000	0.0000	0.0000	0.0000	0.0000	0.0000
Total	6.5208	1.0000	5.5623	1.0000	0.4913	1.0000

Vapour Phase

Phase Fraction 1.000

COMPONENTS	MOLAR FLOW (kgmole/h)	MOLE FRACTION	MASS FLOW (tonne/d)	MASS FRACTION	LIQUID VOLUME FLOW (m3/h)	LIQUID VOLUME FRACTION
Methane	2.9377	0.4505	1.1311	0.2033	0.1574	0.3204
Ethane	0.9534	0.1462	0.6880	0.1237	0.0806	0.1641
Propane	0.9027	0.1384	0.9554	0.1718	0.0786	0.1599
i-Butane	0.1716	0.0263	0.2394	0.0430	0.0178	0.0361
n-Butane	0.3726	0.0571	0.5198	0.0935	0.0371	0.0756
i-Pentane	0.0978	0.0150	0.1693	0.0304	0.0113	0.0230
n-Pentane	0.1141	0.0175	0.1976	0.0355	0.0131	0.0266
n-Hexane	0.1648	0.0253	0.3408	0.0613	0.0214	0.0436
Nitrogen	0.0454	0.0070	0.0305	0.0055	0.0016	0.0032
CO2	0.2431	0.0373	0.2568	0.0462	0.0130	0.0264

* Specified by user.

Material Stream: 11 (continued)

Fluid Package: Basis-1
Property Package: Peng-Robinson

COMPOSITION

Vapour Phase (continued)

Phase Fraction 1.000

COMPONENTS	MOLAR FLOW (kgmole/h)	MOLE FRACTION	MASS FLOW (tonne/d)	MASS FRACTION	LIQUID VOLUME FLOW (m3/h)	LIQUID VOLUME FRACTION
H2S	0.0000	0.0000	0.0000	0.0000	0.0000	0.0000
H2O	0.0622	0.0095	0.0269	0.0048	0.0011	0.0023
NBP[1]95*	0.0347	0.0053	0.0565	0.0102	0.0035	0.0071
NBP[1]121*	0.0412	0.0063	0.0721	0.0130	0.0044	0.0089
NBP[1]147*	0.0507	0.0078	0.0976	0.0175	0.0058	0.0118
NBP[1]171*	0.0886	0.0136	0.1864	0.0335	0.0109	0.0222
NBP[1]195*	0.1007	0.0154	0.2260	0.0406	0.0131	0.0266
NBP[1]222*	0.0592	0.0091	0.1429	0.0257	0.0082	0.0166
NBP[1]248*	0.0371	0.0057	0.0962	0.0173	0.0054	0.0111
NBP[1]273*	0.0213	0.0033	0.0592	0.0106	0.0033	0.0067
NBP[1]299*	0.0113	0.0017	0.0335	0.0060	0.0018	0.0038
NBP[1]325*	0.0052	0.0008	0.0165	0.0030	0.0009	0.0018
NBP[1]351*	0.0026	0.0004	0.0087	0.0016	0.0005	0.0010
NBP[1]377*	0.0014	0.0002	0.0049	0.0009	0.0003	0.0005
NBP[1]402*	0.0007	0.0001	0.0027	0.0005	0.0001	0.0003
NBP[1]428*	0.0004	0.0001	0.0015	0.0003	0.0001	0.0002
NBP[1]454*	0.0002	0.0000	0.0009	0.0002	0.0000	0.0001
NBP[1]480*	0.0001	0.0000	0.0005	0.0001	0.0000	0.0000
NBP[1]505*	0.0001	0.0000	0.0002	0.0000	0.0000	0.0000
NBP[1]531*	0.0000	0.0000	0.0001	0.0000	0.0000	0.0000
NBP[1]557*	0.0000	0.0000	0.0001	0.0000	0.0000	0.0000
NBP[1]582*	0.0000	0.0000	0.0000	0.0000	0.0000	0.0000
NBP[1]608*	0.0000	0.0000	0.0000	0.0000	0.0000	0.0000
NBP[1]634*	0.0000	0.0000	0.0000	0.0000	0.0000	0.0000
NBP[1]659*	0.0000	0.0000	0.0000	0.0000	0.0000	0.0000
NBP[1]685*	0.0000	0.0000	0.0000	0.0000	0.0000	0.0000
NBP[1]711*	0.0000	0.0000	0.0000	0.0000	0.0000	0.0000
NBP[1]736*	0.0000	0.0000	0.0000	0.0000	0.0000	0.0000
NBP[1]762*	0.0000	0.0000	0.0000	0.0000	0.0000	0.0000
NBP[1]788*	0.0000	0.0000	0.0000	0.0000	0.0000	0.0000
NBP[1]825*	0.0000	0.0000	0.0000	0.0000	0.0000	0.0000
NBP[1]873*	0.0000	0.0000	0.0000	0.0000	0.0000	0.0000
NBP[1]926*	0.0000	0.0000	0.0000	0.0000	0.0000	0.0000
NBP[1]978*	0.0000	0.0000	0.0000	0.0000	0.0000	0.0000
NBP[1]1021*	0.0000	0.0000	0.0000	0.0000	0.0000	0.0000
NBP[1]1075*	0.0000	0.0000	0.0000	0.0000	0.0000	0.0000
NBP[1]1123*	0.0000	0.0000	0.0000	0.0000	0.0000	0.0000
NBP[1]1173*	0.0000	0.0000	0.0000	0.0000	0.0000	0.0000
NBP[1]1250*	0.0000	0.0000	0.0000	0.0000	0.0000	0.0000
NBP[1]1339*	0.0000	0.0000	0.0000	0.0000	0.0000	0.0000
NBP[1]1432*	0.0000	0.0000	0.0000	0.0000	0.0000	0.0000
NBP[1]1528*	0.0000	0.0000	0.0000	0.0000	0.0000	0.0000
NBP[1]1637*	0.0000	0.0000	0.0000	0.0000	0.0000	0.0000
NBP[1]1732*	0.0000	0.0000	0.0000	0.0000	0.0000	0.0000
NBP[1]1819*	0.0000	0.0000	0.0000	0.0000	0.0000	0.0000
NBP[1]1913*	0.0000	0.0000	0.0000	0.0000	0.0000	0.0000
Total	6.5208	1.0000	5.5623	1.0000	0.4913	1.0000

Liquid Phase

Phase Fraction 0.0000

COMPONENTS	MOLAR FLOW (kgmole/h)	MOLE FRACTION	MASS FLOW (tonne/d)	MASS FRACTION	LIQUID VOLUME FLOW (m3/h)	LIQUID VOLUME FRACTION
Methane	0.0000	0.0053	0.0000	0.0001	0.0000	0.0004
Ethane	0.0000	0.0044	0.0000	0.0002	0.0000	0.0005
Propane	0.0000	0.0091	0.0000	0.0006	0.0000	0.0011

* Specified by user.

Material Stream: 11 (continued)

Fluid Package: Basis-1
Property Package: Peng-Robinson

COMPOSITION

Liquid Phase (continued)

Phase Fraction 0.0000

COMPONENTS	MOLAR FLOW (kgmole/h)	MOLE FRACTION	MASS FLOW (tonne/d)	MASS FRACTION	LIQUID VOLUME FLOW (m3/h)	LIQUID VOLUME FRACTION
i-Butane	0.0000	0.0033	0.0000	0.0003	0.0000	0.0005
n-Butane	0.0000	0.0084	0.0000	0.0007	0.0000	0.0012
i-Pentane	0.0000	0.0042	0.0000	0.0004	0.0000	0.0007
n-Pentane	0.0000	0.0057	0.0000	0.0006	0.0000	0.0009
n-Hexane	0.0000	0.0184	0.0000	0.0022	0.0000	0.0034
Nitrogen	0.0000	0.0001	0.0000	0.0000	0.0000	0.0000
CO2	0.0000	0.0010	0.0000	0.0001	0.0000	0.0001
H2S	0.0000	0.0000	0.0000	0.0000	0.0000	0.0000
H2O	0.0000	0.0003	0.0000	0.0000	0.0000	0.0000
NBP[1]95*	0.0000	0.0017	0.0000	0.0002	0.0000	0.0002
NBP[1]121*	0.0000	0.0027	0.0000	0.0003	0.0000	0.0004
NBP[1]147*	0.0000	0.0046	0.0000	0.0005	0.0000	0.0007
NBP[1]171*	0.0000	0.0111	0.0000	0.0014	0.0000	0.0019
NBP[1]195*	0.0000	0.0176	0.0000	0.0023	0.0000	0.0032
NBP[1]222*	0.0000	0.0158	0.0000	0.0022	0.0000	0.0031
NBP[1]248*	0.0000	0.0150	0.0000	0.0023	0.0000	0.0031
NBP[1]273*	0.0000	0.0132	0.0000	0.0022	0.0000	0.0029
NBP[1]299*	0.0000	0.0109	0.0000	0.0019	0.0000	0.0025
NBP[1]325*	0.0000	0.0082	0.0000	0.0015	0.0000	0.0020
NBP[1]351*	0.0000	0.0067	0.0000	0.0013	0.0000	0.0017
NBP[1]377*	0.0000	0.0060	0.0000	0.0013	0.0000	0.0016
NBP[1]402*	0.0000	0.0054	0.0000	0.0012	0.0000	0.0015
NBP[1]428*	0.0000	0.0049	0.0000	0.0012	0.0000	0.0015
NBP[1]454*	0.0000	0.0047	0.0000	0.0012	0.0000	0.0015
NBP[1]480*	0.0000	0.0045	0.0000	0.0012	0.0000	0.0015
NBP[1]505*	0.0000	0.0042	0.0000	0.0012	0.0000	0.0015
NBP[1]531*	0.0000	0.0038	0.0000	0.0012	0.0000	0.0014
NBP[1]557*	0.0000	0.0035	0.0000	0.0011	0.0000	0.0014
NBP[1]582*	0.0000	0.0031	0.0000	0.0011	0.0000	0.0013
NBP[1]608*	0.0000	0.0029	0.0000	0.0011	0.0000	0.0013
NBP[1]634*	0.0000	0.0027	0.0000	0.0011	0.0000	0.0012
NBP[1]659*	0.0000	0.0025	0.0000	0.0011	0.0000	0.0012
NBP[1]685*	0.0000	0.0025	0.0000	0.0011	0.0000	0.0013
NBP[1]711*	0.0000	0.0025	0.0000	0.0012	0.0000	0.0013
NBP[1]736*	0.0000	0.0025	0.0000	0.0012	0.0000	0.0014
NBP[1]762*	0.0000	0.0024	0.0000	0.0012	0.0000	0.0014
NBP[1]788*	0.0000	0.0023	0.0000	0.0012	0.0000	0.0014
NBP[1]825*	0.0000	0.0039	0.0000	0.0022	0.0000	0.0025
NBP[1]873*	0.0000	0.0030	0.0000	0.0019	0.0000	0.0020
NBP[1]926*	0.0000	0.0028	0.0000	0.0019	0.0000	0.0021
NBP[1]978*	0.0000	0.0035	0.0000	0.0026	0.0000	0.0028
NBP[1]1021*	0.0000	0.0024	0.0000	0.0019	0.0000	0.0020
NBP[1]1075*	0.0000	0.0026	0.0000	0.0021	0.0000	0.0023
NBP[1]1123*	0.0000	0.0042	0.0000	0.0037	0.0000	0.0039
NBP[1]1173*	0.0000	0.0069	0.0000	0.0065	0.0000	0.0067
NBP[1]1250*	0.0000	0.0461	0.0000	0.0466	0.0000	0.0476
NBP[1]1339*	0.0000	0.1901	0.0000	0.2146	0.0000	0.2156
NBP[1]1432*	0.0000	0.1940	0.0000	0.2394	0.0000	0.2368
NBP[1]1528*	0.0000	0.1374	0.0000	0.1827	0.0000	0.1783
NBP[1]1637*	0.0000	0.0965	0.0000	0.1363	0.0000	0.1315
NBP[1]1732*	0.0000	0.0771	0.0000	0.1147	0.0000	0.1094
NBP[1]1819*	0.0000	0.0013	0.0000	0.0020	0.0000	0.0019
NBP[1]1913*	0.0000	0.0000	0.0000	0.0000	0.0000	0.0000
Total	0.0000	1.0000	0.0000	1.0000	0.0000	1.0000

Licensed to: PETROCHEMICAL ENGINEERIN
* Specified by user.

Material Stream: 11 (continued)

Fluid Package: Basis-1
Property Package: Peng-Robinson

COMPOSITION

Liquid Phase

Phase Fraction 0.0000

COMPONENTS	MOLAR FLOW (kgmole/h)	MOLE FRACTION	MASS FLOW (tonne/d)	MASS FRACTION	LIQUID VOLUME FLOW (m3/h)	LIQUID VOLUME FRACTION
Methane	0.0000	0.0041	0.0000	0.0003	0.0000	0.0009
Ethane	0.0000	0.0049	0.0000	0.0007	0.0000	0.0016
Propane	0.0000	0.0128	0.0000	0.0026	0.0000	0.0044
i-Butane	0.0000	0.0052	0.0000	0.0014	0.0000	0.0021
n-Butane	0.0000	0.0146	0.0000	0.0040	0.0000	0.0057
i-Pentane	0.0000	0.0082	0.0000	0.0028	0.0000	0.0037
n-Pentane	0.0000	0.0118	0.0000	0.0040	0.0000	0.0053
n-Hexane	0.0000	0.0444	0.0000	0.0179	0.0000	0.0226
Nitrogen	0.0000	0.0000	0.0000	0.0000	0.0000	0.0000
CO2	0.0000	0.0008	0.0000	0.0002	0.0000	0.0002
H2S	0.0000	0.0000	0.0000	0.0000	0.0000	0.0000
H2O	0.0000	0.0002	0.0000	0.0000	0.0000	0.0000
NBP[1]95*	0.0000	0.0036	0.0000	0.0011	0.0000	0.0014
NBP[1]121*	0.0000	0.0062	0.0000	0.0021	0.0000	0.0026
NBP[1]147*	0.0000	0.0115	0.0000	0.0043	0.0000	0.0051
NBP[1]171*	0.0000	0.0296	0.0000	0.0122	0.0000	0.0143
NBP[1]195*	0.0000	0.0504	0.0000	0.0221	0.0000	0.0257
NBP[1]222*	0.0000	0.0486	0.0000	0.0229	0.0000	0.0263
NBP[1]248*	0.0000	0.0493	0.0000	0.0250	0.0000	0.0283
NBP[1]273*	0.0000	0.0464	0.0000	0.0252	0.0000	0.0282
NBP[1]299*	0.0000	0.0410	0.0000	0.0237	0.0000	0.0263
NBP[1]325*	0.0000	0.0327	0.0000	0.0201	0.0000	0.0220
NBP[1]351*	0.0000	0.0285	0.0000	0.0186	0.0000	0.0202
NBP[1]377*	0.0000	0.0275	0.0000	0.0192	0.0000	0.0206
NBP[1]402*	0.0000	0.0262	0.0000	0.0195	0.0000	0.0207
NBP[1]428*	0.0000	0.0256	0.0000	0.0203	0.0000	0.0214
NBP[1]454*	0.0000	0.0260	0.0000	0.0220	0.0000	0.0229
NBP[1]480*	0.0000	0.0266	0.0000	0.0241	0.0000	0.0249
NBP[1]505*	0.0000	0.0260	0.0000	0.0251	0.0000	0.0257
NBP[1]531*	0.0000	0.0252	0.0000	0.0259	0.0000	0.0263
NBP[1]557*	0.0000	0.0244	0.0000	0.0266	0.0000	0.0268
NBP[1]582*	0.0000	0.0234	0.0000	0.0271	0.0000	0.0270
NBP[1]608*	0.0000	0.0225	0.0000	0.0277	0.0000	0.0274
NBP[1]634*	0.0000	0.0221	0.0000	0.0288	0.0000	0.0283
NBP[1]659*	0.0000	0.0218	0.0000	0.0300	0.0000	0.0292
NBP[1]685*	0.0000	0.0226	0.0000	0.0328	0.0000	0.0317
NBP[1]711*	0.0000	0.0236	0.0000	0.0361	0.0000	0.0346
NBP[1]736*	0.0000	0.0233	0.0000	0.0374	0.0000	0.0355
NBP[1]762*	0.0000	0.0227	0.0000	0.0382	0.0000	0.0360
NBP[1]788*	0.0000	0.0218	0.0000	0.0387	0.0000	0.0363
NBP[1]825*	0.0000	0.0365	0.0000	0.0697	0.0000	0.0647
NBP[1]873*	0.0000	0.0251	0.0000	0.0521	0.0000	0.0478
NBP[1]926*	0.0000	0.0197	0.0000	0.0442	0.0000	0.0401
NBP[1]978*	0.0000	0.0202	0.0000	0.0497	0.0000	0.0444
NBP[1]1021*	0.0000	0.0100	0.0000	0.0259	0.0000	0.0229
NBP[1]1075*	0.0000	0.0061	0.0000	0.0168	0.0000	0.0148
NBP[1]1123*	0.0000	0.0057	0.0000	0.0166	0.0000	0.0144
NBP[1]1173*	0.0000	0.0040	0.0000	0.0124	0.0000	0.0107
NBP[1]1250*	0.0000	0.0046	0.0000	0.0154	0.0000	0.0131
NBP[1]1339*	0.0000	0.0016	0.0000	0.0059	0.0000	0.0049
NBP[1]1432*	0.0000	0.0000	0.0000	0.0001	0.0000	0.0001
NBP[1]1528*	0.0000	0.0000	0.0000	0.0000	0.0000	0.0000
NBP[1]1637*	0.0000	0.0000	0.0000	0.0000	0.0000	0.0000
NBP[1]1732*	0.0000	0.0000	0.0000	0.0000	0.0000	0.0000

* Specified by user.

Material Stream: 11 (continued)

Fluid Package: Basis-1
Property Package: Peng-Robinson

COMPOSITION

Liquid Phase (continued)

Phase Fraction 0.0000

COMPONENTS	MOLAR FLOW (kgmole/h)	MOLE FRACTION	MASS FLOW (tonne/d)	MASS FRACTION	LIQUID VOLUME FLOW (m3/h)	LIQUID VOLUME FRACTION
NBP[1]1819*	0.0000	0.0000	0.0000	0.0000	0.0000	0.0000
NBP[1]1913*	0.0000	0.0000	0.0000	0.0000	0.0000	0.0000
Total	0.0000	1.0000	0.0000	1.0000	0.0000	1.0000

Material Stream: 12

Fluid Package: Basis-1
Property Package: Peng-Robinson

CONDITIONS

		Overall	Vapour Phase	Liquid Phase	Liquid Phase
Vapour / Phase Fraction		0.0000	0.0000	0.0177	0.9823
Temperature:	(F)	162.5	162.5	162.5	162.5
Pressure:	(psig)	20.00	20.00	20.00	20.00
Molar Flow	(MMSCFD)	0.1484	0.0000	2.634e-003	0.1458
Mass Flow	(tonne/d)	39.40	0.0000	2.235	37.17
Std Ideal Liq Vol Flow	(barrel/day)	293.8	0.0000	13.98	279.8
Molar Enthalpy	(kJ/kgmole)	-4.590e+005	-1.062e+005	-1.455e+006	-4.410e+005
Molar Entropy	(kJ/kgmole-C)	418.0	191.5	1700	394.8
Heat Flow	(MMBtu/hr)	-3.216	0.0000	-0.1810	-3.035
Liq Vol Flow @Std Cond	(barrel/day)	293.6 *	0.0000	14.20	279.2

PROPERTIES

		Overall	Vapour Phase	Liquid Phase	Liquid Phase
Molecular Weight		222.1	35.54	709.9	213.3
Molar Density	(kgmole/m3)	3.610	8.454e-002	1.345	3.723
Mass Density	(kg/m3)	801.8	3.005	954.5	794.1
Act. Volume Flow	(barrel/day)	309.1	0.0000	14.73	294.4
Mass Enthalpy	(kJ/kg)	-2067	-2987	-2050	-2068
Mass Entropy	(kJ/kg-C)	1.882	5.387	2.395	1.851
Heat Capacity	(kJ/kgmole-C)	470.9	68.92	1463	453.0
Mass Heat Capacity	(kJ/kg-C)	2.120	1.939	2.061	2.124
LHV Molar Basis (Std)	(Btu/SCF)	---	---	---	---
LHV Mass Basis (Std)	(kJ/kg)	---	---	---	---
Phase Fraction [Vol. Basis]		---	---	4.760e-002	0.9524
Phase Fraction [Mass Basis]		0.0000	0.0000	5.672e-002	0.9433
Partial Pressure of CO2	(psig)	-14.70	---	---	---
Cost Based on Flow	(Cost/s)	0.0000	0.0000	0.0000	0.0000
Act. Gas Flow	(ACT_m3/h)	---	---	---	---
Avg. Liq. Density	(kgmole/m3)	3.799	13.27	1.416	3.918
Specific Heat	(kJ/kgmole-C)	470.9	68.92	1463	453.0
Std. Gas Flow	(STD_m3/h)	174.8	0.0000	3.102	171.7
Std. Ideal Liq. Mass Density	(kg/m3)	843.7	471.8	1005	835.6
Act. Liq. Flow	(barrel/day)	309.1	---	14.73	294.4
Z Factor		---	0.9846	6.190e-002	2.236e-002
Watson K		11.83	14.89	11.95	11.85
User Property		---	---	---	---
Partial Pressure of H2S	(psig)	-14.70	---	---	---
Cp/(Cp - R)		1.018	1.137	1.006	1.019
Cp/Cv		1.018	1.147	1.185	1.019
Heat of Vap.	(kJ/kgmole)	4.141e+005	---	---	---
Kinematic Viscosity	(cSt)	2.037	3.879	358.1	1.885
Liq. Mass Density (Std. Cond)	(kg/m3)	844.1	402.2	990.1	837.5
Liq. Vol. Flow (Std. Cond)	(barrel/day)	293.6	0.0000	14.20	279.2
Liquid Fraction		1.000	0.0000	1.000	1.000
Molar Volume	(m3/kgmole)	0.2770	11.83	0.7437	0.2686

* Specified by user.

Material Stream: 12 (continued)

Fluid Package: Basis-1
Property Package: Peng-Robinson

PROPERTIES

	Overall	Vapour Phase	Liquid Phase	Liquid Phase
Mass Heat of Vap. (kJ/kg)	1865	---	---	---
Phase Fraction [Molar Basis]	0.0000	0.0000	0.0177	0.9823
Surface Tension (dyne/cm)	---	---	24.12	20.89
Thermal Conductivity (W/m-K)	0.1121	2.859e-002	0.1313	0.1112
Viscosity (cP)	2.037	1.166e-002	341.8	1.497
Cv (Semi-Ideal) (kJ/kgmole-C)	462.6	60.60	1455	---
Mass Cv (Semi-Ideal) (kJ/kg-C)	2.083	1.705	2.050	---
Cv (kJ/kgmole-C)	462.6	60.07	1235	---
Mass Cv (kJ/kg-C)	2.083	1.690	1.739	---
Cv (Ent. Method) (kJ/kgmole-C)	---	---	1336	---
Mass Cv (Ent. Method) (kJ/kg-C)	---	---	1.882	---
Cp/Cv (Ent. Method)	---	---	1.095	---
Reid VP at 37.8 C (psig)	-7.851	854.6	-10.47	-7.757
True VP at 37.8 C (psig)	8.745	1708	11.02	9.173
Liq. Vol. Flow - Sum(Std. Ctl) (barrel/day)	14.20	0.0000	14.20	0.0000
HHV Molar Basis (Std) (Btu/SCF)	---	---	---	---
HHV Mass Basis (Std) (kJ/kg)	---	---	---	---
CO2 Loading	---	---	---	---
CO2 App ML Con (kgmole/m3)	2.876e-003	---	1.359e-003	2.952e-003
CO2 App WT Con (kgmol/kg)	3.588e-006	---	1.424e-006	3.718e-006
Phase Fraction [Act. Vol. Basis]	0.0000	0.0000	4.764e-002	0.9524
Mass Exergy (kJ/kg)	7.263	---	---	---
Viscosity Index	12.25	---	---	---
Ideal Gas Cp/Cv	1.022	1.139	1.007	1.023
Ideal Gas Cp (kJ/kgmole-C)	389.8	68.31	1249	374.3
Mass Ideal Gas Cp (kJ/kg-C)	1.755	1.922	1.759	1.755
Bubble Point Pressure (psig)	19.44	---	---	---

COMPOSITION

Overall Phase

Vapour Fraction 0.0000

COMPONENTS	MOLAR FLOW (kgmole/h)	MOLE FRACTION	MASS FLOW (tonne/d)	MASS FRACTION	LIQUID VOLUME FLOW (m3/h)	LIQUID VOLUME FRACTION
Methane	0.0304	0.0041	0.0117	0.0003	0.0016	0.0008
Ethane	0.0364	0.0049	0.0263	0.0007	0.0031	0.0016
Propane	0.0942	0.0127	0.0997	0.0025	0.0082	0.0042
i-Butane	0.0383	0.0052	0.0535	0.0014	0.0040	0.0020
n-Butane	0.1071	0.0145	0.1494	0.0038	0.0107	0.0055
i-Pentane	0.0604	0.0082	0.1046	0.0027	0.0070	0.0036
n-Pentane	0.0868	0.0117	0.1502	0.0038	0.0099	0.0051
n-Hexane	0.3245	0.0439	0.6712	0.0170	0.0422	0.0217
Nitrogen	0.0002	0.0000	0.0001	0.0000	0.0000	0.0000
CO2	0.0059	0.0008	0.0062	0.0002	0.0003	0.0002
H2S	0.0000	0.0000	0.0000	0.0000	0.0000	0.0000
H2O	0.0016	0.0002	0.0007	0.0000	0.0000	0.0000
NBP[1]95*	0.0263	0.0036	0.0428	0.0011	0.0026	0.0013
NBP[1]121*	0.0456	0.0062	0.0797	0.0020	0.0048	0.0025
NBP[1]147*	0.0838	0.0113	0.1613	0.0041	0.0096	0.0049
NBP[1]171*	0.2166	0.0293	0.4558	0.0116	0.0267	0.0137
NBP[1]195*	0.3685	0.0499	0.8276	0.0210	0.0479	0.0246
NBP[1]222*	0.3552	0.0480	0.8578	0.0218	0.0490	0.0252
NBP[1]248*	0.3600	0.0487	0.9349	0.0237	0.0528	0.0271
NBP[1]273*	0.3389	0.0458	0.9411	0.0239	0.0525	0.0270
NBP[1]299*	0.2992	0.0405	0.8858	0.0225	0.0489	0.0251
NBP[1]325*	0.2384	0.0323	0.7500	0.0190	0.0410	0.0211
NBP[1]351*	0.2078	0.0281	0.6948	0.0176	0.0376	0.0193
NBP[1]377*	0.2006	0.0271	0.7152	0.0182	0.0383	0.0197

* Specified by user.

Material Stream: 12 (continued)

Fluid Package: Basis-1
Property Package: Peng-Robinson

COMPOSITION

Overall Phase (continued)

Vapour Fraction 0.0000

COMPONENTS	MOLAR FLOW (kgmole/h)	MOLE FRACTION	MASS FLOW (tonne/d)	MASS FRACTION	LIQUID VOLUME FLOW (m3/h)	LIQUID VOLUME FRACTION
NBP[1]402*	0.1909	0.0258	0.7260	0.0184	0.0385	0.0198
NBP[1]428*	0.1864	0.0252	0.7563	0.0192	0.0397	0.0204
NBP[1]454*	0.1893	0.0256	0.8206	0.0208	0.0427	0.0219
NBP[1]480*	0.1941	0.0263	0.8991	0.0228	0.0463	0.0238
NBP[1]505*	0.1895	0.0256	0.9359	0.0238	0.0477	0.0245
NBP[1]531*	0.1837	0.0249	0.9661	0.0245	0.0488	0.0251
NBP[1]557*	0.1775	0.0240	0.9929	0.0252	0.0498	0.0256
NBP[1]582*	0.1701	0.0230	1.0102	0.0256	0.0502	0.0258
NBP[1]608*	0.1640	0.0222	1.0333	0.0262	0.0509	0.0262
NBP[1]634*	0.1609	0.0218	1.0743	0.0273	0.0525	0.0270
NBP[1]659*	0.1585	0.0214	1.1188	0.0284	0.0542	0.0279
NBP[1]685*	0.1641	0.0222	1.2224	0.0310	0.0588	0.0302
NBP[1]711*	0.1715	0.0232	1.3442	0.0341	0.0642	0.0330
NBP[1]736*	0.1697	0.0230	1.3914	0.0353	0.0659	0.0339
NBP[1]762*	0.1653	0.0224	1.4214	0.0361	0.0669	0.0344
NBP[1]788*	0.1585	0.0214	1.4423	0.0366	0.0674	0.0346
NBP[1]825*	0.2655	0.0359	2.5963	0.0659	0.1201	0.0617
NBP[1]873*	0.1830	0.0248	1.9404	0.0492	0.0887	0.0456
NBP[1]926*	0.1437	0.0194	1.6472	0.0418	0.0744	0.0383
NBP[1]978*	0.1474	0.0199	1.8524	0.0470	0.0825	0.0424
NBP[1]1021*	0.0728	0.0099	0.9655	0.0245	0.0426	0.0219
NBP[1]1075*	0.0449	0.0061	0.6310	0.0160	0.0276	0.0142
NBP[1]1123*	0.0417	0.0056	0.6267	0.0159	0.0271	0.0139
NBP[1]1173*	0.0300	0.0041	0.4772	0.0121	0.0205	0.0105
NBP[1]1250*	0.0393	0.0053	0.6767	0.0172	0.0287	0.0147
NBP[1]1339*	0.0364	0.0049	0.6999	0.0178	0.0291	0.0150
NBP[1]1432*	0.0257	0.0035	0.5397	0.0137	0.0221	0.0114
NBP[1]1528*	0.0180	0.0024	0.4082	0.0104	0.0165	0.0085
NBP[1]1637*	0.0127	0.0017	0.3047	0.0077	0.0122	0.0063
NBP[1]1732*	0.0101	0.0014	0.2564	0.0065	0.0101	0.0052
NBP[1]1819*	0.0002	0.0000	0.0045	0.0001	0.0002	0.0001
NBP[1]1913*	0.0000	0.0000	0.0000	0.0000	0.0000	0.0000
Total	7.3918	1.0000	39.4027	1.0000	1.9460	1.0000

Vapour Phase

Phase Fraction 0.0000

COMPONENTS	MOLAR FLOW (kgmole/h)	MOLE FRACTION	MASS FLOW (tonne/d)	MASS FRACTION	LIQUID VOLUME FLOW (m3/h)	LIQUID VOLUME FRACTION
Methane	0.0000	0.4505	0.0000	0.2033	0.0000	0.3204
Ethane	0.0000	0.1462	0.0000	0.1237	0.0000	0.1641
Propane	0.0000	0.1384	0.0000	0.1718	0.0000	0.1599
i-Butane	0.0000	0.0263	0.0000	0.0430	0.0000	0.0361
n-Butane	0.0000	0.0571	0.0000	0.0935	0.0000	0.0756
i-Pentane	0.0000	0.0150	0.0000	0.0304	0.0000	0.0230
n-Pentane	0.0000	0.0175	0.0000	0.0355	0.0000	0.0266
n-Hexane	0.0000	0.0253	0.0000	0.0613	0.0000	0.0436
Nitrogen	0.0000	0.0070	0.0000	0.0055	0.0000	0.0032
CO2	0.0000	0.0373	0.0000	0.0462	0.0000	0.0264
H2S	0.0000	0.0000	0.0000	0.0000	0.0000	0.0000
H2O	0.0000	0.0095	0.0000	0.0048	0.0000	0.0023
NBP[1]95*	0.0000	0.0053	0.0000	0.0102	0.0000	0.0071
NBP[1]121*	0.0000	0.0063	0.0000	0.0130	0.0000	0.0089
NBP[1]147*	0.0000	0.0078	0.0000	0.0175	0.0000	0.0118
NBP[1]171*	0.0000	0.0136	0.0000	0.0335	0.0000	0.0222
NBP[1]195*	0.0000	0.0154	0.0000	0.0406	0.0000	0.0266

* Specified by user.

Material Stream: 12 (continued)

Fluid Package: Basis-1
Property Package: Peng-Robinson

COMPOSITION

Vapour Phase (continued)

Phase Fraction 0.0000

COMPONENTS	MOLAR FLOW (kgmole/h)	MOLE FRACTION	MASS FLOW (tonne/d)	MASS FRACTION	LIQUID VOLUME FLOW (m3/h)	LIQUID VOLUME FRACTION
NBP[1]222*	0.0000	0.0091	0.0000	0.0257	0.0000	0.0166
NBP[1]248*	0.0000	0.0057	0.0000	0.0173	0.0000	0.0111
NBP[1]273*	0.0000	0.0033	0.0000	0.0106	0.0000	0.0067
NBP[1]299*	0.0000	0.0017	0.0000	0.0060	0.0000	0.0038
NBP[1]325*	0.0000	0.0008	0.0000	0.0030	0.0000	0.0018
NBP[1]351*	0.0000	0.0004	0.0000	0.0016	0.0000	0.0010
NBP[1]377*	0.0000	0.0002	0.0000	0.0009	0.0000	0.0005
NBP[1]402*	0.0000	0.0001	0.0000	0.0005	0.0000	0.0003
NBP[1]428*	0.0000	0.0001	0.0000	0.0003	0.0000	0.0002
NBP[1]454*	0.0000	0.0000	0.0000	0.0002	0.0000	0.0001
NBP[1]480*	0.0000	0.0000	0.0000	0.0001	0.0000	0.0000
NBP[1]505*	0.0000	0.0000	0.0000	0.0000	0.0000	0.0000
NBP[1]531*	0.0000	0.0000	0.0000	0.0000	0.0000	0.0000
NBP[1]557*	0.0000	0.0000	0.0000	0.0000	0.0000	0.0000
NBP[1]582*	0.0000	0.0000	0.0000	0.0000	0.0000	0.0000
NBP[1]608*	0.0000	0.0000	0.0000	0.0000	0.0000	0.0000
NBP[1]634*	0.0000	0.0000	0.0000	0.0000	0.0000	0.0000
NBP[1]659*	0.0000	0.0000	0.0000	0.0000	0.0000	0.0000
NBP[1]685*	0.0000	0.0000	0.0000	0.0000	0.0000	0.0000
NBP[1]711*	0.0000	0.0000	0.0000	0.0000	0.0000	0.0000
NBP[1]736*	0.0000	0.0000	0.0000	0.0000	0.0000	0.0000
NBP[1]762*	0.0000	0.0000	0.0000	0.0000	0.0000	0.0000
NBP[1]788*	0.0000	0.0000	0.0000	0.0000	0.0000	0.0000
NBP[1]825*	0.0000	0.0000	0.0000	0.0000	0.0000	0.0000
NBP[1]873*	0.0000	0.0000	0.0000	0.0000	0.0000	0.0000
NBP[1]926*	0.0000	0.0000	0.0000	0.0000	0.0000	0.0000
NBP[1]978*	0.0000	0.0000	0.0000	0.0000	0.0000	0.0000
NBP[1]1021*	0.0000	0.0000	0.0000	0.0000	0.0000	0.0000
NBP[1]1075*	0.0000	0.0000	0.0000	0.0000	0.0000	0.0000
NBP[1]1123*	0.0000	0.0000	0.0000	0.0000	0.0000	0.0000
NBP[1]1173*	0.0000	0.0000	0.0000	0.0000	0.0000	0.0000
NBP[1]1250*	0.0000	0.0000	0.0000	0.0000	0.0000	0.0000
NBP[1]1339*	0.0000	0.0000	0.0000	0.0000	0.0000	0.0000
NBP[1]1432*	0.0000	0.0000	0.0000	0.0000	0.0000	0.0000
NBP[1]1528*	0.0000	0.0000	0.0000	0.0000	0.0000	0.0000
NBP[1]1637*	0.0000	0.0000	0.0000	0.0000	0.0000	0.0000
NBP[1]1732*	0.0000	0.0000	0.0000	0.0000	0.0000	0.0000
NBP[1]1819*	0.0000	0.0000	0.0000	0.0000	0.0000	0.0000
NBP[1]1913*	0.0000	0.0000	0.0000	0.0000	0.0000	0.0000
Total	0.0000	1.0000	0.0000	1.0000	0.0000	1.0000

Liquid Phase

Phase Fraction 1.775e-002

COMPONENTS	MOLAR FLOW (kgmole/h)	MOLE FRACTION	MASS FLOW (tonne/d)	MASS FRACTION	LIQUID VOLUME FLOW (m3/h)	LIQUID VOLUME FRACTION
Methane	0.0007	0.0053	0.0003	0.0001	0.0000	0.0004
Ethane	0.0006	0.0044	0.0004	0.0002	0.0000	0.0005
Propane	0.0012	0.0091	0.0013	0.0006	0.0001	0.0011
i-Butane	0.0004	0.0033	0.0006	0.0003	0.0000	0.0005
n-Butane	0.0011	0.0084	0.0015	0.0007	0.0001	0.0012
i-Pentane	0.0006	0.0042	0.0010	0.0004	0.0001	0.0007
n-Pentane	0.0008	0.0057	0.0013	0.0006	0.0001	0.0009
n-Hexane	0.0024	0.0184	0.0050	0.0022	0.0003	0.0034
Nitrogen	0.0000	0.0001	0.0000	0.0000	0.0000	0.0000
CO2	0.0001	0.0010	0.0001	0.0001	0.0000	0.0001

* Specified by user.

Material Stream: 12 (continued)

Fluid Package: Basis-1
Property Package: Peng-Robinson

COMPOSITION

Liquid Phase (continued)

Phase Fraction 1.775e-002

COMPONENTS	MOLAR FLOW (kgmole/h)	MOLE FRACTION	MASS FLOW (tonne/d)	MASS FRACTION	LIQUID VOLUME FLOW (m3/h)	LIQUID VOLUME FRACTION
H2S	0.0000	0.0000	0.0000	0.0000	0.0000	0.0000
H2O	0.0000	0.0003	0.0000	0.0000	0.0000	0.0000
NBP[1]95*	0.0002	0.0017	0.0004	0.0002	0.0000	0.0002
NBP[1]121*	0.0004	0.0027	0.0006	0.0003	0.0000	0.0004
NBP[1]147*	0.0006	0.0046	0.0012	0.0005	0.0001	0.0007
NBP[1]171*	0.0015	0.0111	0.0031	0.0014	0.0002	0.0019
NBP[1]195*	0.0023	0.0176	0.0052	0.0023	0.0003	0.0032
NBP[1]222*	0.0021	0.0158	0.0050	0.0022	0.0003	0.0031
NBP[1]248*	0.0020	0.0150	0.0051	0.0023	0.0003	0.0031
NBP[1]273*	0.0017	0.0132	0.0048	0.0022	0.0003	0.0029
NBP[1]299*	0.0014	0.0109	0.0043	0.0019	0.0002	0.0025
NBP[1]325*	0.0011	0.0082	0.0034	0.0015	0.0002	0.0020
NBP[1]351*	0.0009	0.0067	0.0029	0.0013	0.0002	0.0017
NBP[1]377*	0.0008	0.0060	0.0028	0.0013	0.0002	0.0016
NBP[1]402*	0.0007	0.0054	0.0027	0.0012	0.0001	0.0015
NBP[1]428*	0.0006	0.0049	0.0026	0.0012	0.0001	0.0015
NBP[1]454*	0.0006	0.0047	0.0027	0.0012	0.0001	0.0015
NBP[1]480*	0.0006	0.0045	0.0027	0.0012	0.0001	0.0015
NBP[1]505*	0.0005	0.0042	0.0027	0.0012	0.0001	0.0015
NBP[1]531*	0.0005	0.0038	0.0026	0.0012	0.0001	0.0014
NBP[1]557*	0.0005	0.0035	0.0025	0.0011	0.0001	0.0014
NBP[1]582*	0.0004	0.0031	0.0024	0.0011	0.0001	0.0013
NBP[1]608*	0.0004	0.0029	0.0024	0.0011	0.0001	0.0013
NBP[1]634*	0.0004	0.0027	0.0024	0.0011	0.0001	0.0012
NBP[1]659*	0.0003	0.0025	0.0023	0.0011	0.0001	0.0012
NBP[1]685*	0.0003	0.0025	0.0025	0.0011	0.0001	0.0013
NBP[1]711*	0.0003	0.0025	0.0026	0.0012	0.0001	0.0013
NBP[1]736*	0.0003	0.0025	0.0026	0.0012	0.0001	0.0014
NBP[1]762*	0.0003	0.0024	0.0027	0.0012	0.0001	0.0014
NBP[1]788*	0.0003	0.0023	0.0027	0.0012	0.0001	0.0014
NBP[1]825*	0.0005	0.0039	0.0050	0.0022	0.0002	0.0025
NBP[1]873*	0.0004	0.0030	0.0041	0.0019	0.0002	0.0020
NBP[1]926*	0.0004	0.0028	0.0042	0.0019	0.0002	0.0021
NBP[1]978*	0.0005	0.0035	0.0058	0.0026	0.0003	0.0028
NBP[1]1021*	0.0003	0.0024	0.0042	0.0019	0.0002	0.0020
NBP[1]1075*	0.0003	0.0026	0.0048	0.0021	0.0002	0.0023
NBP[1]1123*	0.0006	0.0042	0.0083	0.0037	0.0004	0.0039
NBP[1]1173*	0.0009	0.0069	0.0145	0.0065	0.0006	0.0067
NBP[1]1250*	0.0060	0.0461	0.1041	0.0466	0.0044	0.0476
NBP[1]1339*	0.0249	0.1901	0.4796	0.2146	0.0200	0.2156
NBP[1]1432*	0.0254	0.1940	0.5350	0.2394	0.0219	0.2368
NBP[1]1528*	0.0180	0.1374	0.4082	0.1827	0.0165	0.1783
NBP[1]1637*	0.0127	0.0965	0.3047	0.1363	0.0122	0.1315
NBP[1]1732*	0.0101	0.0771	0.2564	0.1147	0.0101	0.1094
NBP[1]1819*	0.0002	0.0013	0.0045	0.0020	0.0002	0.0019
NBP[1]1913*	0.0000	0.0000	0.0000	0.0000	0.0000	0.0000
Total	0.1312	1.0000	2.2349	1.0000	0.0926	1.0000

Liquid Phase

Phase Fraction 0.9823

COMPONENTS	MOLAR FLOW (kgmole/h)	MOLE FRACTION	MASS FLOW (tonne/d)	MASS FRACTION	LIQUID VOLUME FLOW (m3/h)	LIQUID VOLUME FRACTION
Methane	0.0297	0.0041	0.0114	0.0003	0.0016	0.0009
Ethane	0.0359	0.0049	0.0259	0.0007	0.0030	0.0016
Propane	0.0930	0.0128	0.0984	0.0026	0.0081	0.0044

* Specified by user.

Material Stream: 12 (continued)

Fluid Package: Basis-1
Property Package: Peng-Robinson

COMPOSITION

Liquid Phase (continued)

Phase Fraction 0.9823

COMPONENTS	MOLAR FLOW (kgmole/h)	MOLE FRACTION	MASS FLOW (tonne/d)	MASS FRACTION	LIQUID VOLUME FLOW (m3/h)	LIQUID VOLUME FRACTION
i-Butane	0.0379	0.0052	0.0528	0.0014	0.0039	0.0021
n-Butane	0.1060	0.0146	0.1478	0.0040	0.0106	0.0057
i-Pentane	0.0599	0.0082	0.1037	0.0028	0.0069	0.0037
n-Pentane	0.0860	0.0118	0.1489	0.0040	0.0099	0.0053
n-Hexane	0.3221	0.0444	0.6662	0.0179	0.0419	0.0226
Nitrogen	0.0002	0.0000	0.0001	0.0000	0.0000	0.0000
CO2	0.0058	0.0008	0.0061	0.0002	0.0003	0.0002
H2S	0.0000	0.0000	0.0000	0.0000	0.0000	0.0000
H2O	0.0016	0.0002	0.0007	0.0000	0.0000	0.0000
NBP[1]95*	0.0260	0.0036	0.0425	0.0011	0.0026	0.0014
NBP[1]121*	0.0452	0.0062	0.0791	0.0021	0.0048	0.0026
NBP[1]147*	0.0832	0.0115	0.1601	0.0043	0.0095	0.0051
NBP[1]171*	0.2152	0.0296	0.4528	0.0122	0.0265	0.0143
NBP[1]195*	0.3662	0.0504	0.8224	0.0221	0.0476	0.0257
NBP[1]222*	0.3531	0.0486	0.8528	0.0229	0.0487	0.0263
NBP[1]248*	0.3580	0.0493	0.9298	0.0250	0.0525	0.0283
NBP[1]273*	0.3371	0.0464	0.9363	0.0252	0.0523	0.0282
NBP[1]299*	0.2977	0.0410	0.8816	0.0237	0.0487	0.0263
NBP[1]325*	0.2373	0.0327	0.7466	0.0201	0.0408	0.0220
NBP[1]351*	0.2069	0.0285	0.6919	0.0186	0.0375	0.0202
NBP[1]377*	0.1998	0.0275	0.7124	0.0192	0.0382	0.0206
NBP[1]402*	0.1902	0.0262	0.7233	0.0195	0.0384	0.0207
NBP[1]428*	0.1858	0.0256	0.7537	0.0203	0.0396	0.0214
NBP[1]454*	0.1886	0.0260	0.8179	0.0220	0.0425	0.0229
NBP[1]480*	0.1935	0.0266	0.8964	0.0241	0.0461	0.0249
NBP[1]505*	0.1889	0.0260	0.9332	0.0251	0.0476	0.0257
NBP[1]531*	0.1832	0.0252	0.9635	0.0259	0.0487	0.0263
NBP[1]557*	0.1771	0.0244	0.9904	0.0266	0.0496	0.0268
NBP[1]582*	0.1697	0.0234	1.0078	0.0271	0.0501	0.0270
NBP[1]608*	0.1636	0.0225	1.0309	0.0277	0.0508	0.0274
NBP[1]634*	0.1606	0.0221	1.0719	0.0288	0.0524	0.0283
NBP[1]659*	0.1582	0.0218	1.1165	0.0300	0.0541	0.0292
NBP[1]685*	0.1637	0.0226	1.2199	0.0328	0.0587	0.0317
NBP[1]711*	0.1712	0.0236	1.3416	0.0361	0.0640	0.0346
NBP[1]736*	0.1694	0.0233	1.3888	0.0374	0.0658	0.0355
NBP[1]762*	0.1650	0.0227	1.4187	0.0382	0.0667	0.0360
NBP[1]788*	0.1582	0.0218	1.4396	0.0387	0.0672	0.0363
NBP[1]825*	0.2649	0.0365	2.5912	0.0697	0.1199	0.0647
NBP[1]873*	0.1826	0.0251	1.9363	0.0521	0.0886	0.0478
NBP[1]926*	0.1434	0.0197	1.6429	0.0442	0.0743	0.0401
NBP[1]978*	0.1469	0.0202	1.8467	0.0497	0.0822	0.0444
NBP[1]1021*	0.0725	0.0100	0.9613	0.0259	0.0425	0.0229
NBP[1]1075*	0.0446	0.0061	0.6262	0.0168	0.0274	0.0148
NBP[1]1123*	0.0412	0.0057	0.6184	0.0166	0.0268	0.0144
NBP[1]1173*	0.0291	0.0040	0.4627	0.0124	0.0199	0.0107
NBP[1]1250*	0.0333	0.0046	0.5726	0.0154	0.0243	0.0131
NBP[1]1339*	0.0115	0.0016	0.2203	0.0059	0.0092	0.0049
NBP[1]1432*	0.0002	0.0000	0.0048	0.0001	0.0002	0.0001
NBP[1]1528*	0.0000	0.0000	0.0000	0.0000	0.0000	0.0000
NBP[1]1637*	0.0000	0.0000	0.0000	0.0000	0.0000	0.0000
NBP[1]1732*	0.0000	0.0000	0.0000	0.0000	0.0000	0.0000
NBP[1]1819*	0.0000	0.0000	0.0000	0.0000	0.0000	0.0000
NBP[1]1913*	0.0000	0.0000	0.0000	0.0000	0.0000	0.0000
Total	7.2606	1.0000	37.1678	1.0000	1.8533	1.0000

* Specified by user.

Material Stream: 13

Fluid Package: Basis-1
Property Package: Peng-Robinson

CONDITIONS

	Overall	Vapour Phase	Liquid Phase		
Vapour / Phase Fraction	1.0000	1.0000	0.0000		
Temperature: (F)	104.7	104.7	104.7		
Pressure: (psig)	20.00	20.00	20.00		
Molar Flow (MMSCFD)	2.941	2.941	6.947e-013		
Mass Flow (tonne/d)	81.75	81.75	2.980e-010		
Std Ideal Liq Vol Flow (barrel/day)	1214	1214	2.103e-009		
Molar Enthalpy (kJ/kgmole)	-1.308e+005	-1.308e+005	-7.604e+005		
Molar Entropy (kJ/kgmole-C)	182.3	182.3	646.1		
Heat Flow (MMBtu/hr)	-18.16	-18.16	-2.494e-011		
Liq Vol Flow @Std Cond (barrel/day)	5.211e+005 *	5.211e+005	2.097e-009		

PROPERTIES

	Overall	Vapour Phase	Liquid Phase		
Molecular Weight	23.25	23.25	358.9		
Molar Density (kgmole/m3)	9.231e-002	9.231e-002	2.442		
Mass Density (kg/m3)	2.147	2.147	876.3		
Act. Volume Flow (barrel/day)	2.395e+005	2.395e+005	2.139e-009		
Mass Enthalpy (kJ/kg)	-5624	-5624	-2119		
Mass Entropy (kJ/kg-C)	7.840	7.840	1.800		
Heat Capacity (kJ/kgmole-C)	39.03	39.03	698.6		
Mass Heat Capacity (kJ/kg-C)	1.678	1.678	1.947		
LHV Molar Basis (Std) (Btu/SCF)	---	---	---		
LHV Mass Basis (Std) (kJ/kg)	---	---	---		
Phase Fraction [Vol. Basis]	1.000	1.000	1.732e-012		
Phase Fraction [Mass Basis]	1.000	1.000	3.645e-012		
Partial Pressure of CO2 (psig)	-8.336	---	---		
Cost Based on Flow (Cost/s)	0.0000	0.0000	0.0000		
Act. Gas Flow (ACT_m3/h)	1587	1587	---		
Avg. Liq. Density (kgmole/m3)	18.21	18.21	2.483		
Specific Heat (kJ/kgmole-C)	39.03	39.03	698.6		
Std. Gas Flow (STD_m3/h)	3463	3463	8.181e-010		
Std. Ideal Liq. Mass Density (kg/m3)	423.4	423.4	891.2		
Act. Liq. Flow (barrel/day)	---	---	---		
Z Factor	---	0.9941	3.758e-002		
Watson K	14.60	14.60	11.97		
User Property	---	---	---		
Partial Pressure of H2S (psig)	-14.70	---	---		
Cp/(Cp - R)	1.271	1.271	1.012		
Cp/Cv	1.280	1.280	1.161		
Heat of Vap. (kJ/kgmole)	1.717e+004	---	---		
Kinematic Viscosity (cSt)	5.916	5.916	15.04		
Liq. Mass Density (Std. Cond) (kg/m3)	0.9867	0.9867	893.7		
Liq. Vol. Flow (Std. Cond) (barrel/day)	5.211e+005	5.211e+005	2.097e-009		
Liquid Fraction	0.0000	0.0000	1.000		
Molar Volume (m3/kgmole)	10.83	10.83	0.4095		
Mass Heat of Vap. (kJ/kg)	738.2	---	---		
Phase Fraction [Molar Basis]	1.0000	1.0000	0.0000		
Surface Tension (dyne/cm)	---	---	28.14		
Thermal Conductivity (W/m-K)	3.035e-002	3.035e-002	0.1259		
Viscosity (cP)	1.270e-002	1.270e-002	13.18		
Cv (Semi-Ideal) (kJ/kgmole-C)	30.71	30.71	690.3		
Mass Cv (Semi-Ideal) (kJ/kg-C)	1.321	1.321	1.924		
Cv (kJ/kgmole-C)	30.48	30.48	602.0		
Mass Cv (kJ/kg-C)	1.311	1.311	1.677		
Cv (Ent. Method) (kJ/kgmole-C)	---	---	578.9		
Mass Cv (Ent. Method) (kJ/kg-C)	---	---	1.613		
Cp/Cv (Ent. Method)	---	---	1.207		

* Specified by user.

Material Stream: 13 (continued)

Fluid Package: Basis-1
Property Package: Peng-Robinson

PROPERTIES

	Overall	Vapour Phase	Liquid Phase		
Reid VP at 37.8 C (psig)	---	---	-11.40		
True VP at 37.8 C (psig)	---	---	19.40		
Liq. Vol. Flow - Sum(Std. Cond) (barrel/day)	5.211e+005	5.211e+005	0.0000		
HHV Molar Basis (Std) (Btu/SCF)	---	---	---		
HHV Mass Basis (Std) (kJ/kg)	---	---	---		
CO2 Loading	---	---	---		
CO2 App ML Con (kgmole/m3)	---	---	1.291e-002		
CO2 App WT Con (kgmol/kg)	---	---	1.473e-005		
Phase Fraction [Act. Vol. Basis]	1.000	1.000	8.930e-015		
Mass Exergy (kJ/kg)	91.79	---	---		
Viscosity Index	-8.856	---	---		
Ideal Gas Cp/Cv	1.273	1.273	1.015		
Ideal Gas Cp (kJ/kgmole-C)	38.76	38.76	574.0		
Mass Ideal Gas Cp (kJ/kg-C)	1.667	1.667	1.599		
Bubble Point Pressure (psig)	232.3	---	---		

COMPOSITION

Overall Phase

Vapour Fraction 1.0000

COMPONENTS	MOLAR FLOW (kgmole/h)	MOLE FRACTION	MASS FLOW (tonne/d)	MASS FRACTION	LIQUID VOLUME FLOW (m3/h)	LIQUID VOLUME FRACTION
Methane	103.3857	0.7058	39.8065	0.4869	5.5399	0.6887
Ethane	6.1869	0.0422	4.4649	0.0546	0.5230	0.0650
Propane	1.2691	0.0087	1.3431	0.0164	0.1105	0.0137
i-Butane	0.1926	0.0013	0.2686	0.0033	0.0199	0.0025
n-Butane	0.3936	0.0027	0.5490	0.0067	0.0392	0.0049
i-Pentane	0.1082	0.0007	0.1874	0.0023	0.0125	0.0016
n-Pentane	0.1141	0.0008	0.1976	0.0024	0.0131	0.0016
n-Hexane	0.3741	0.0026	0.7738	0.0095	0.0487	0.0060
Nitrogen	7.0866	0.0484	4.7644	0.0583	0.2462	0.0306
CO2	26.8503	0.1833	28.3602	0.3469	1.4318	0.1780
H2S	0.0000	0.0000	0.0000	0.0000	0.0000	0.0000
H2O	0.0622	0.0004	0.0269	0.0003	0.0011	0.0001
NBP[1]95*	0.0347	0.0002	0.0565	0.0007	0.0035	0.0004
NBP[1]121*	0.0412	0.0003	0.0721	0.0009	0.0044	0.0005
NBP[1]147*	0.0507	0.0003	0.0976	0.0012	0.0058	0.0007
NBP[1]171*	0.0886	0.0006	0.1864	0.0023	0.0109	0.0014
NBP[1]195*	0.1007	0.0007	0.2260	0.0028	0.0131	0.0016
NBP[1]222*	0.0592	0.0004	0.1429	0.0017	0.0082	0.0010
NBP[1]248*	0.0371	0.0003	0.0962	0.0012	0.0054	0.0007
NBP[1]273*	0.0213	0.0001	0.0592	0.0007	0.0033	0.0004
NBP[1]299*	0.0113	0.0001	0.0335	0.0004	0.0018	0.0002
NBP[1]325*	0.0052	0.0000	0.0165	0.0002	0.0009	0.0001
NBP[1]351*	0.0026	0.0000	0.0087	0.0001	0.0005	0.0001
NBP[1]377*	0.0014	0.0000	0.0049	0.0001	0.0003	0.0000
NBP[1]402*	0.0007	0.0000	0.0027	0.0000	0.0001	0.0000
NBP[1]428*	0.0004	0.0000	0.0015	0.0000	0.0001	0.0000
NBP[1]454*	0.0002	0.0000	0.0009	0.0000	0.0000	0.0000
NBP[1]480*	0.0001	0.0000	0.0005	0.0000	0.0000	0.0000
NBP[1]505*	0.0001	0.0000	0.0002	0.0000	0.0000	0.0000
NBP[1]531*	0.0000	0.0000	0.0001	0.0000	0.0000	0.0000
NBP[1]557*	0.0000	0.0000	0.0001	0.0000	0.0000	0.0000
NBP[1]582*	0.0000	0.0000	0.0000	0.0000	0.0000	0.0000
NBP[1]608*	0.0000	0.0000	0.0000	0.0000	0.0000	0.0000
NBP[1]634*	0.0000	0.0000	0.0000	0.0000	0.0000	0.0000
NBP[1]659*	0.0000	0.0000	0.0000	0.0000	0.0000	0.0000
NBP[1]685*	0.0000	0.0000	0.0000	0.0000	0.0000	0.0000

* Specified by user.

Material Stream: 13 (continued)

Fluid Package: Basis-1
Property Package: Peng-Robinson

COMPOSITION

Overall Phase (continued)

Vapour Fraction 1.0000

COMPONENTS	MOLAR FLOW (kgmole/h)	MOLE FRACTION	MASS FLOW (tonne/d)	MASS FRACTION	LIQUID VOLUME FLOW (m3/h)	LIQUID VOLUME FRACTION
NBP[1]711*	0.0000	0.0000	0.0000	0.0000	0.0000	0.0000
NBP[1]736*	0.0000	0.0000	0.0000	0.0000	0.0000	0.0000
NBP[1]762*	0.0000	0.0000	0.0000	0.0000	0.0000	0.0000
NBP[1]788*	0.0000	0.0000	0.0000	0.0000	0.0000	0.0000
NBP[1]825*	0.0000	0.0000	0.0000	0.0000	0.0000	0.0000
NBP[1]873*	0.0000	0.0000	0.0000	0.0000	0.0000	0.0000
NBP[1]926*	0.0000	0.0000	0.0000	0.0000	0.0000	0.0000
NBP[1]978*	0.0000	0.0000	0.0000	0.0000	0.0000	0.0000
NBP[1]1021*	0.0000	0.0000	0.0000	0.0000	0.0000	0.0000
NBP[1]1075*	0.0000	0.0000	0.0000	0.0000	0.0000	0.0000
NBP[1]1123*	0.0000	0.0000	0.0000	0.0000	0.0000	0.0000
NBP[1]1173*	0.0000	0.0000	0.0000	0.0000	0.0000	0.0000
NBP[1]1250*	0.0000	0.0000	0.0000	0.0000	0.0000	0.0000
NBP[1]1339*	0.0000	0.0000	0.0000	0.0000	0.0000	0.0000
NBP[1]1432*	0.0000	0.0000	0.0000	0.0000	0.0000	0.0000
NBP[1]1528*	0.0000	0.0000	0.0000	0.0000	0.0000	0.0000
NBP[1]1637*	0.0000	0.0000	0.0000	0.0000	0.0000	0.0000
NBP[1]1732*	0.0000	0.0000	0.0000	0.0000	0.0000	0.0000
NBP[1]1819*	0.0000	0.0000	0.0000	0.0000	0.0000	0.0000
NBP[1]1913*	0.0000	0.0000	0.0000	0.0000	0.0000	0.0000
Total	146.4787	1.0000	81.7491	1.0000	8.0442	1.0000

Vapour Phase

Phase Fraction 1.000

COMPONENTS	MOLAR FLOW (kgmole/h)	MOLE FRACTION	MASS FLOW (tonne/d)	MASS FRACTION	LIQUID VOLUME FLOW (m3/h)	LIQUID VOLUME FRACTION
Methane	103.3857	0.7058	39.8065	0.4869	5.5399	0.6887
Ethane	6.1869	0.0422	4.4649	0.0546	0.5230	0.0650
Propane	1.2691	0.0087	1.3431	0.0164	0.1105	0.0137
i-Butane	0.1926	0.0013	0.2686	0.0033	0.0199	0.0025
n-Butane	0.3936	0.0027	0.5490	0.0067	0.0392	0.0049
i-Pentane	0.1082	0.0007	0.1874	0.0023	0.0125	0.0016
n-Pentane	0.1141	0.0008	0.1976	0.0024	0.0131	0.0016
n-Hexane	0.3741	0.0026	0.7738	0.0095	0.0487	0.0060
Nitrogen	7.0866	0.0484	4.7644	0.0583	0.2462	0.0306
CO2	26.8503	0.1833	28.3602	0.3469	1.4318	0.1780
H2S	0.0000	0.0000	0.0000	0.0000	0.0000	0.0000
H2O	0.0622	0.0004	0.0269	0.0003	0.0011	0.0001
NBP[1]95*	0.0347	0.0002	0.0565	0.0007	0.0035	0.0004
NBP[1]121*	0.0412	0.0003	0.0721	0.0009	0.0044	0.0005
NBP[1]147*	0.0507	0.0003	0.0976	0.0012	0.0058	0.0007
NBP[1]171*	0.0886	0.0006	0.1864	0.0023	0.0109	0.0014
NBP[1]195*	0.1007	0.0007	0.2260	0.0028	0.0131	0.0016
NBP[1]222*	0.0592	0.0004	0.1429	0.0017	0.0082	0.0010
NBP[1]248*	0.0371	0.0003	0.0962	0.0012	0.0054	0.0007
NBP[1]273*	0.0213	0.0001	0.0592	0.0007	0.0033	0.0004
NBP[1]299*	0.0113	0.0001	0.0335	0.0004	0.0018	0.0002
NBP[1]325*	0.0052	0.0000	0.0165	0.0002	0.0009	0.0001
NBP[1]351*	0.0026	0.0000	0.0087	0.0001	0.0005	0.0001
NBP[1]377*	0.0014	0.0000	0.0049	0.0001	0.0003	0.0000
NBP[1]402*	0.0007	0.0000	0.0027	0.0000	0.0001	0.0000
NBP[1]428*	0.0004	0.0000	0.0015	0.0000	0.0001	0.0000
NBP[1]454*	0.0002	0.0000	0.0009	0.0000	0.0000	0.0000
NBP[1]480*	0.0001	0.0000	0.0005	0.0000	0.0000	0.0000
NBP[1]505*	0.0001	0.0000	0.0002	0.0000	0.0000	0.0000

* Specified by user.

Material Stream: 13 (continued)

Fluid Package: Basis-1
Property Package: Peng-Robinson

COMPOSITION

Vapour Phase (continued)

Phase Fraction 1.000

COMPONENTS	MOLAR FLOW (kgmole/h)	MOLE FRACTION	MASS FLOW (tonne/d)	MASS FRACTION	LIQUID VOLUME FLOW (m3/h)	LIQUID VOLUME FRACTION
NBP[1]531*	0.0000	0.0000	0.0001	0.0000	0.0000	0.0000
NBP[1]557*	0.0000	0.0000	0.0001	0.0000	0.0000	0.0000
NBP[1]582*	0.0000	0.0000	0.0000	0.0000	0.0000	0.0000
NBP[1]608*	0.0000	0.0000	0.0000	0.0000	0.0000	0.0000
NBP[1]634*	0.0000	0.0000	0.0000	0.0000	0.0000	0.0000
NBP[1]659*	0.0000	0.0000	0.0000	0.0000	0.0000	0.0000
NBP[1]685*	0.0000	0.0000	0.0000	0.0000	0.0000	0.0000
NBP[1]711*	0.0000	0.0000	0.0000	0.0000	0.0000	0.0000
NBP[1]736*	0.0000	0.0000	0.0000	0.0000	0.0000	0.0000
NBP[1]762*	0.0000	0.0000	0.0000	0.0000	0.0000	0.0000
NBP[1]788*	0.0000	0.0000	0.0000	0.0000	0.0000	0.0000
NBP[1]825*	0.0000	0.0000	0.0000	0.0000	0.0000	0.0000
NBP[1]873*	0.0000	0.0000	0.0000	0.0000	0.0000	0.0000
NBP[1]926*	0.0000	0.0000	0.0000	0.0000	0.0000	0.0000
NBP[1]978*	0.0000	0.0000	0.0000	0.0000	0.0000	0.0000
NBP[1]1021*	0.0000	0.0000	0.0000	0.0000	0.0000	0.0000
NBP[1]1075*	0.0000	0.0000	0.0000	0.0000	0.0000	0.0000
NBP[1]1123*	0.0000	0.0000	0.0000	0.0000	0.0000	0.0000
NBP[1]1173*	0.0000	0.0000	0.0000	0.0000	0.0000	0.0000
NBP[1]1250*	0.0000	0.0000	0.0000	0.0000	0.0000	0.0000
NBP[1]1339*	0.0000	0.0000	0.0000	0.0000	0.0000	0.0000
NBP[1]1432*	0.0000	0.0000	0.0000	0.0000	0.0000	0.0000
NBP[1]1528*	0.0000	0.0000	0.0000	0.0000	0.0000	0.0000
NBP[1]1637*	0.0000	0.0000	0.0000	0.0000	0.0000	0.0000
NBP[1]1732*	0.0000	0.0000	0.0000	0.0000	0.0000	0.0000
NBP[1]1819*	0.0000	0.0000	0.0000	0.0000	0.0000	0.0000
NBP[1]1913*	0.0000	0.0000	0.0000	0.0000	0.0000	0.0000
Total	146.4787	1.0000	81.7491	1.0000	8.0442	1.0000

Liquid Phase

Phase Fraction 2.362e-013

COMPONENTS	MOLAR FLOW (kgmole/h)	MOLE FRACTION	MASS FLOW (tonne/d)	MASS FRACTION	LIQUID VOLUME FLOW (m3/h)	LIQUID VOLUME FRACTION
Methane	0.0000	0.0068	0.0000	0.0003	0.0000	0.0009
Ethane	0.0000	0.0018	0.0000	0.0002	0.0000	0.0004
Propane	0.0000	0.0012	0.0000	0.0001	0.0000	0.0003
i-Butane	0.0000	0.0004	0.0000	0.0001	0.0000	0.0001
n-Butane	0.0000	0.0012	0.0000	0.0002	0.0000	0.0003
i-Pentane	0.0000	0.0008	0.0000	0.0002	0.0000	0.0002
n-Pentane	0.0000	0.0011	0.0000	0.0002	0.0000	0.0003
n-Hexane	0.0000	0.0110	0.0000	0.0026	0.0000	0.0036
Nitrogen	0.0000	0.0002	0.0000	0.0000	0.0000	0.0000
CO2	0.0000	0.0053	0.0000	0.0006	0.0000	0.0007
H2S	0.0000	0.0000	0.0000	0.0000	0.0000	0.0000
H2O	0.0000	0.0000	0.0000	0.0000	0.0000	0.0000
NBP[1]95*	0.0000	0.0003	0.0000	0.0001	0.0000	0.0001
NBP[1]121*	0.0000	0.0006	0.0000	0.0001	0.0000	0.0002
NBP[1]147*	0.0000	0.0012	0.0000	0.0003	0.0000	0.0003
NBP[1]171*	0.0000	0.0033	0.0000	0.0008	0.0000	0.0010
NBP[1]195*	0.0000	0.0060	0.0000	0.0016	0.0000	0.0019
NBP[1]222*	0.0000	0.0064	0.0000	0.0018	0.0000	0.0022
NBP[1]248*	0.0000	0.0070	0.0000	0.0021	0.0000	0.0026
NBP[1]273*	0.0000	0.0073	0.0000	0.0023	0.0000	0.0028
NBP[1]299*	0.0000	0.0070	0.0000	0.0024	0.0000	0.0029
NBP[1]325*	0.0000	0.0062	0.0000	0.0023	0.0000	0.0027

* Specified by user.

Material Stream: 13 (continued)

Fluid Package: Basis-1
Property Package: Peng-Robinson

COMPOSITION

Liquid Phase (continued)

Phase Fraction 2.362e-013

COMPONENTS	MOLAR FLOW (kgmole/h)	MOLE FRACTION	MASS FLOW (tonne/d)	MASS FRACTION	LIQUID VOLUME FLOW (m3/h)	LIQUID VOLUME FRACTION
NBP[1]351*	0.0000	0.0060	0.0000	0.0023	0.0000	0.0027
NBP[1]377*	0.0000	0.0066	0.0000	0.0027	0.0000	0.0031
NBP[1]402*	0.0000	0.0070	0.0000	0.0031	0.0000	0.0035
NBP[1]428*	0.0000	0.0078	0.0000	0.0037	0.0000	0.0041
NBP[1]454*	0.0000	0.0090	0.0000	0.0045	0.0000	0.0050
NBP[1]480*	0.0000	0.0105	0.0000	0.0057	0.0000	0.0062
NBP[1]505*	0.0000	0.0118	0.0000	0.0068	0.0000	0.0074
NBP[1]531*	0.0000	0.0133	0.0000	0.0081	0.0000	0.0088
NBP[1]557*	0.0000	0.0149	0.0000	0.0097	0.0000	0.0104
NBP[1]582*	0.0000	0.0168	0.0000	0.0116	0.0000	0.0123
NBP[1]608*	0.0000	0.0191	0.0000	0.0140	0.0000	0.0148
NBP[1]634*	0.0000	0.0223	0.0000	0.0173	0.0000	0.0181
NBP[1]659*	0.0000	0.0263	0.0000	0.0216	0.0000	0.0224
NBP[1]685*	0.0000	0.0329	0.0000	0.0284	0.0000	0.0293
NBP[1]711*	0.0000	0.0417	0.0000	0.0379	0.0000	0.0387
NBP[1]736*	0.0000	0.0500	0.0000	0.0476	0.0000	0.0482
NBP[1]762*	0.0000	0.0595	0.0000	0.0594	0.0000	0.0598
NBP[1]788*	0.0000	0.0701	0.0000	0.0740	0.0000	0.0740
NBP[1]825*	0.0000	0.1588	0.0000	0.1804	0.0000	0.1785
NBP[1]873*	0.0000	0.1606	0.0000	0.1977	0.0000	0.1934
NBP[1]926*	0.0000	0.1358	0.0000	0.1806	0.0000	0.1746
NBP[1]978*	0.0000	0.0399	0.0000	0.0582	0.0000	0.0555
NBP[1]1021*	0.0000	0.0037	0.0000	0.0058	0.0000	0.0054
NBP[1]1075*	0.0000	0.0003	0.0000	0.0004	0.0000	0.0004
NBP[1]1123*	0.0000	0.0000	0.0000	0.0001	0.0000	0.0001
NBP[1]1173*	0.0000	0.0000	0.0000	0.0000	0.0000	0.0000
NBP[1]1250*	0.0000	0.0000	0.0000	0.0000	0.0000	0.0000
NBP[1]1339*	0.0000	0.0000	0.0000	0.0000	0.0000	0.0000
NBP[1]1432*	0.0000	0.0000	0.0000	0.0000	0.0000	0.0000
NBP[1]1528*	0.0000	0.0000	0.0000	0.0000	0.0000	0.0000
NBP[1]1637*	0.0000	0.0000	0.0000	0.0000	0.0000	0.0000
NBP[1]1732*	0.0000	0.0000	0.0000	0.0000	0.0000	0.0000
NBP[1]1819*	0.0000	0.0000	0.0000	0.0000	0.0000	0.0000
NBP[1]1913*	0.0000	0.0000	0.0000	0.0000	0.0000	0.0000
Total	0.0000	1.0000	0.0000	1.0000	0.0000	1.0000

Material Stream: FLASH-G-

Fluid Package: Basis-1
Property Package: Peng-Robinson

CONDITIONS

		Overall				
Vapour / Phase Fraction		---				
Temperature:	(F)	---				
Pressure:	(psig)	450.0				
Molar Flow	(MMSCFD)	0.1359				
Mass Flow	(tonne/d)	6.156 *				
Std Ideal Liq Vol Flow	(barrel/day)	80.89				
Molar Enthalpy	(kJ/kgmole)	---				
Molar Entropy	(kJ/kgmole-C)	---				
Heat Flow	(MMBtu/hr)	---				
Liq Vol Flow @Std Cond	(barrel/day)	87.30 *				

* Specified by user.

Material Stream: FLASH-G- (continued)

Fluid Package: Basis-1
Property Package: Peng-Robinson

PROPERTIES

		Overall				
Molecular Weight		37.88				
Molar Density	(kgmole/m3)	---				
Mass Density	(kg/m3)	---				
Act. Volume Flow	(barrel/day)	---				
Mass Enthalpy	(kJ/kg)	---				
Mass Entropy	(kJ/kg-C)	---				
Heat Capacity	(kJ/kgmole-C)	---				
Mass Heat Capacity	(kJ/kg-C)	---				
LHV Molar Basis (Std)	(Btu/SCF)	---				
LHV Mass Basis (Std)	(kJ/kg)	---				
Phase Fraction [Vol. Basis]		0.0000				
Phase Fraction [Mass Basis]		0.0000				
Partial Pressure of CO2	(psig)	-14.70				
Cost Based on Flow	(Cost/s)	0.0000				
Act. Gas Flow	(ACT_m3/h)	---				
Avg. Liq. Density	(kgmole/m3)	12.64				
Specific Heat	(kJ/kgmole-C)	---				
Std. Gas Flow	(STD_m3/h)	160.1				
Std. Ideal Liq. Mass Density	(kg/m3)	478.7				
Act. Liq. Flow	(barrel/day)	---				
Z Factor		---				
Watson K		14.89				
User Property		---				
Partial Pressure of H2S	(psig)	-14.70				
Cp/(Cp - R)		---				
Cp/Cv		---				
Heat of Vap.	(kJ/kgmole)	---				
Kinematic Viscosity	(cSt)	---				
Liq. Mass Density (Std. Cond)	(kg/m3)	443.5				
Liq. Vol. Flow (Std. Cond)	(barrel/day)	87.30				
Liquid Fraction		---				
Molar Volume	(m3/kgmole)	---				
Mass Heat of Vap.	(kJ/kg)	---				
Phase Fraction [Molar Basis]		---				
Surface Tension	(dyne/cm)	---				
Thermal Conductivity	(W/m-K)	---				
Viscosity	(cP)	---				
Cv (Semi-Ideal)	(kJ/kgmole-C)	---				
Mass Cv (Semi-Ideal)	(kJ/kg-C)	---				
Cv	(kJ/kgmole-C)	---				
Mass Cv	(kJ/kg-C)	---				
Cv (Ent. Method)	(kJ/kgmole-C)	---				
Mass Cv (Ent. Method)	(kJ/kg-C)	---				
Cp/Cv (Ent. Method)		---				
Reid VP at 37.8 C	(psig)	---				
True VP at 37.8 C	(psig)	---				
Liq. Vol. Flow - Sum(Std. Cond)	(barrel/day)	0.0000				
HHV Molar Basis (Std)	(Btu/SCF)	---				
HHV Mass Basis (Std)	(kJ/kg)	---				
CO2 Loading		---				
CO2 App ML Con	(kgmole/m3)	---				
CO2 App WT Con	(kgmol/kg)	1.012e-003				
Phase Fraction [Act. Vol. Basis]		0.0000				
Mass Exergy	(kJ/kg)	9.741e+006				
Viscosity Index		---				
Ideal Gas Cp/Cv		1.000				
Ideal Gas Cp	(kJ/kgmole-C)	6.915e+007				

* Specified by user.

Material Stream: FLASH-G- (continued)

Fluid Package: Basis-1
Property Package: Peng-Robinson

PROPERTIES

	Overall
Mass Ideal Gas Cp (kJ/kg-C)	1.825e+006
Bubble Point Pressure (psig)	---

COMPOSITION

Overall Phase

Vapour Fraction ---

COMPONENTS	MOLAR FLOW (kgmole/h)	MOLE FRACTION	MASS FLOW (tonne/d)	MASS FRACTION	LIQUID VOLUME FLOW (m3/h)	LIQUID VOLUME FRACTION
Methane	2.2576 *	0.3334 *	0.8692 *	0.1412 *	0.1210 *	0.2258 *
Ethane	1.1838 *	0.1748 *	0.8543 *	0.1388 *	0.1001 *	0.1868 *
Propane	1.4351 *	0.2120 *	1.5188 *	0.2467 *	0.1249 *	0.2331 *
i-Butane	0.2831 *	0.0418 *	0.3950 *	0.0642 *	0.0293 *	0.0547 *
n-Butane	0.5947 *	0.0878 *	0.8295 *	0.1348 *	0.0593 *	0.1106 *
i-Pentane	0.1287 *	0.0190 *	0.2228 *	0.0362 *	0.0149 *	0.0278 *
n-Pentane	0.1372 *	0.0203 *	0.2376 *	0.0386 *	0.0157 *	0.0293 *
n-Hexane	0.1223 *	0.0181 *	0.2530 *	0.0411 *	0.0159 *	0.0297 *
Nitrogen	0.0260 *	0.0038 *	0.0175 *	0.0028 *	0.0009 *	0.0017 *
CO2	0.2597 *	0.0384 *	0.2743 *	0.0446 *	0.0138 *	0.0258 *
H2S	0.0000 *	0.0000 *	0.0000 *	0.0000 *	0.0000 *	0.0000 *
H2O	0.0116 *	0.0017 *	0.0050 *	0.0008 *	0.0002 *	0.0004 *
NBP[1]95*	0.0492 *	0.0073 *	0.0802 *	0.0130 *	0.0049 *	0.0092 *
NBP[1]121*	0.0494 *	0.0073 *	0.0863 *	0.0140 *	0.0052 *	0.0097 *
NBP[1]147*	0.0493 *	0.0073 *	0.0948 *	0.0154 *	0.0056 *	0.0105 *
NBP[1]171*	0.0691 *	0.0102 *	0.1455 *	0.0236 *	0.0085 *	0.0159 *
NBP[1]195*	0.0624 *	0.0092 *	0.1401 *	0.0228 *	0.0081 *	0.0151 *
NBP[1]222*	0.0278 *	0.0041 *	0.0672 *	0.0109 *	0.0038 *	0.0072 *
NBP[1]248*	0.0135 *	0.0020 *	0.0350 *	0.0057 *	0.0020 *	0.0037 *
NBP[1]273*	0.0061 *	0.0009 *	0.0169 *	0.0027 *	0.0009 *	0.0018 *
NBP[1]299*	0.0026 *	0.0004 *	0.0076 *	0.0012 *	0.0004 *	0.0008 *
NBP[1]325*	0.0010 *	0.0001 *	0.0030 *	0.0005 *	0.0002 *	0.0003 *
NBP[1]351*	0.0004 *	0.0001 *	0.0013 *	0.0002 *	0.0001 *	0.0001 *
NBP[1]377*	0.0002 *	0.0000 *	0.0006 *	0.0001 *	0.0000 *	0.0001 *
NBP[1]402*	0.0001 *	0.0000 *	0.0003 *	0.0000 *	0.0000 *	0.0000 *
NBP[1]428*	0.0000 *	0.0000 *	0.0001 *	0.0000 *	0.0000 *	0.0000 *
NBP[1]454*	0.0000 *	0.0000 *	0.0001 *	0.0000 *	0.0000 *	0.0000 *
NBP[1]480*	0.0000 *	0.0000 *	0.0000 *	0.0000 *	0.0000 *	0.0000 *
NBP[1]505*	0.0000 *	0.0000 *	0.0000 *	0.0000 *	0.0000 *	0.0000 *
NBP[1]531*	0.0000 *	0.0000 *	0.0000 *	0.0000 *	0.0000 *	0.0000 *
NBP[1]557*	0.0000 *	0.0000 *	0.0000 *	0.0000 *	0.0000 *	0.0000 *
NBP[1]582*	0.0000 *	0.0000 *	0.0000 *	0.0000 *	0.0000 *	0.0000 *
NBP[1]608*	0.0000 *	0.0000 *	0.0000 *	0.0000 *	0.0000 *	0.0000 *
NBP[1]634*	0.0000 *	0.0000 *	0.0000 *	0.0000 *	0.0000 *	0.0000 *
NBP[1]659*	0.0000 *	0.0000 *	0.0000 *	0.0000 *	0.0000 *	0.0000 *
NBP[1]685*	0.0000 *	0.0000 *	0.0000 *	0.0000 *	0.0000 *	0.0000 *
NBP[1]711*	0.0000 *	0.0000 *	0.0000 *	0.0000 *	0.0000 *	0.0000 *
NBP[1]736*	0.0000 *	0.0000 *	0.0000 *	0.0000 *	0.0000 *	0.0000 *
NBP[1]762*	0.0000 *	0.0000 *	0.0000 *	0.0000 *	0.0000 *	0.0000 *
NBP[1]788*	0.0000 *	0.0000 *	0.0000 *	0.0000 *	0.0000 *	0.0000 *
NBP[1]825*	0.0000 *	0.0000 *	0.0000 *	0.0000 *	0.0000 *	0.0000 *
NBP[1]873*	0.0000 *	0.0000 *	0.0000 *	0.0000 *	0.0000 *	0.0000 *
NBP[1]926*	0.0000 *	0.0000 *	0.0000 *	0.0000 *	0.0000 *	0.0000 *
NBP[1]978*	0.0000 *	0.0000 *	0.0000 *	0.0000 *	0.0000 *	0.0000 *
NBP[1]1021*	0.0000 *	0.0000 *	0.0000 *	0.0000 *	0.0000 *	0.0000 *
NBP[1]1075*	0.0000 *	0.0000 *	0.0000 *	0.0000 *	0.0000 *	0.0000 *
NBP[1]1123*	0.0000 *	0.0000 *	0.0000 *	0.0000 *	0.0000 *	0.0000 *
NBP[1]1173*	0.0000 *	0.0000 *	0.0000 *	0.0000 *	0.0000 *	0.0000 *
NBP[1]1250*	0.0000 *	0.0000 *	0.0000 *	0.0000 *	0.0000 *	0.0000 *

* Specified by user.

Material Stream: FLASH-G- (continued)

Fluid Package: Basis-1
Property Package: Peng-Robinson

COMPOSITION

Overall Phase (continued)

Vapour Fraction ---

COMPONENTS	MOLAR FLOW (kgmole/h)	MOLE FRACTION	MASS FLOW (tonne/d)	MASS FRACTION	LIQUID VOLUME FLOW (m3/h)	LIQUID VOLUME FRACTION
NBP[1]1339*	0.0000 *	0.0000 *	0.0000 *	0.0000 *	0.0000 *	0.0000 *
NBP[1]1432*	0.0000 *	0.0000 *	0.0000 *	0.0000 *	0.0000 *	0.0000 *
NBP[1]1528*	0.0000 *	0.0000 *	0.0000 *	0.0000 *	0.0000 *	0.0000 *
NBP[1]1637*	0.0000 *	0.0000 *	0.0000 *	0.0000 *	0.0000 *	0.0000 *
NBP[1]1732*	0.0000 *	0.0000 *	0.0000 *	0.0000 *	0.0000 *	0.0000 *
NBP[1]1819*	0.0000 *	0.0000 *	0.0000 *	0.0000 *	0.0000 *	0.0000 *
NBP[1]1913*	0.0000 *	0.0000 *	0.0000 *	0.0000 *	0.0000 *	0.0000 *
Total	6.7707	1.0000	6.1561	1.0000	0.5358	1.0000

Material Stream: Gas-PRD

Fluid Package: Basis-1
Property Package: Peng-Robinson

CONDITIONS

		Overall
Vapour / Phase Fraction		---
Temperature:	(F)	---
Pressure:	(psig)	450.0 *
Molar Flow	(MMSCFD)	5.400 *
Mass Flow	(tonne/d)	139.4
Std Ideal Liq Vol Flow	(barrel/day)	2425
Molar Enthalpy	(kJ/kgmole)	---
Molar Entropy	(kJ/kgmole-C)	---
Heat Flow	(MMBtu/hr)	---
Liq Vol Flow @Std Cond	(barrel/day)	9.561e+005 *

PROPERTIES

		Overall
Molecular Weight		21.60
Molar Density	(kgmole/m3)	---
Mass Density	(kg/m3)	---
Act. Volume Flow	(barrel/day)	---
Mass Enthalpy	(kJ/kg)	---
Mass Entropy	(kJ/kg-C)	---
Heat Capacity	(kJ/kgmole-C)	---
Mass Heat Capacity	(kJ/kg-C)	---
LHV Molar Basis (Std)	(Btu/SCF)	1078
LHV Mass Basis (Std)	(kJ/kg)	4.406e+004
Phase Fraction [Vol. Basis]		0.0000
Phase Fraction [Mass Basis]		0.0000
Partial Pressure of CO2	(psig)	-14.70
Cost Based on Flow	(Cost/s)	0.0000
Act. Gas Flow	(ACT_m3/h)	---
Avg. Liq. Density	(kgmole/m3)	16.75
Specific Heat	(kJ/kgmole-C)	---
Std. Gas Flow	(STD_m3/h)	6359
Std. Ideal Liq. Mass Density	(kg/m3)	361.7
Act. Liq. Flow	(barrel/day)	---
Z Factor		---
Watson K		17.22
User Property		---
Partial Pressure of H2S	(psig)	-14.70
Cp/(Cp - R)		---
Cp/Cv		---
Heat of Vap.	(kJ/kgmole)	---

* Specified by user.

Material Stream: Gas-PRD (continued)

Fluid Package: Basis-1
Property Package: Peng-Robinson

PROPERTIES

		Overall				
Kinematic Viscosity	(cSt)	---				
Liq. Mass Density (Std. Cond)	(kg/m3)	0.9172				
Liq. Vol. Flow (Std. Cond)	(barrel/day)	9.561e+005				
Liquid Fraction		---				
Molar Volume	(m3/kgmole)	---				
Mass Heat of Vap.	(kJ/kg)	---				
Phase Fraction [Molar Basis]		---				
Surface Tension	(dyne/cm)	---				
Thermal Conductivity	(W/m-K)	---				
Viscosity	(cP)	---				
Cv (Semi-Ideal)	(kJ/kgmole-C)	---				
Mass Cv (Semi-Ideal)	(kJ/kg-C)	---				
Cv	(kJ/kgmole-C)	---				
Mass Cv	(kJ/kg-C)	---				
Cv (Ent. Method)	(kJ/kgmole-C)	---				
Mass Cv (Ent. Method)	(kJ/kg-C)	---				
Cp/Cv (Ent. Method)		---				
Reid VP at 37.8 C	(psig)	---				
True VP at 37.8 C	(psig)	---				
Liq. Vol. Flow - Sum(Std. Cond)	(barrel/day)	0.0000				
HHV Molar Basis (Std)	(Btu/SCF)	1181				
HHV Mass Basis (Std)	(kJ/kg)	4.824e+004				
CO2 Loading		---				
CO2 App ML Con	(kgmole/m3)	---				
CO2 App WT Con	(kgmol/kg)	1.576e-003				
Phase Fraction [Act. Vol. Basis]		0.0000				
Mass Exergy	(kJ/kg)	9.743e+006				
Viscosity Index		---				
Ideal Gas Cp/Cv		1.000				
Ideal Gas Cp	(kJ/kgmole-C)	8.446e+007				
Mass Ideal Gas Cp	(kJ/kg-C)	3.911e+006				
Bubble Point Pressure	(psig)	---				

COMPOSITION

Overall Phase

Vapour Fraction ---

COMPONENTS	MOLAR FLOW (kgmole/h)	MOLE FRACTION	MASS FLOW (tonne/d)	MASS FRACTION	LIQUID VOLUME FLOW (m3/h)	LIQUID VOLUME FRACTION
Methane	204.7864 *	0.7614 *	78.8488 *	0.5656 *	10.9734 *	0.6832 *
Ethane	27.6169 *	0.1027 *	19.9305 *	0.1430 *	2.3348 *	0.1454 *
Propane	13.8326 *	0.0514 *	14.6395 *	0.1050 *	1.2039 *	0.0750 *
i-Butane	1.7456 *	0.0065 *	2.4350 *	0.0175 *	0.1805 *	0.0112 *
n-Butane	3.3566 *	0.0125 *	4.6824 *	0.0336 *	0.3345 *	0.0208 *
i-Pentane	0.7208 *	0.0027 *	1.2482 *	0.0090 *	0.0834 *	0.0052 *
n-Pentane	0.8230 *	0.0031 *	1.4252 *	0.0102 *	0.0943 *	0.0059 *
n-Hexane	1.3475 *	0.0050 *	2.7870 *	0.0200 *	0.1752 *	0.0109 *
Nitrogen	5.5729 *	0.0207 *	3.7467 *	0.0269 *	0.1936 *	0.0121 *
CO2	9.1554 *	0.0340 *	9.6702 *	0.0694 *	0.4882 *	0.0304 *
H2S	0.0005 *	0.0000 *	0.0004 *	0.0000 *	0.0000 *	0.0000 *
H2O	0.0000 *	0.0000 *	0.0000 *	0.0000 *	0.0000 *	0.0000 *
NBP[1]95*	0.0000 *	0.0000 *	0.0000 *	0.0000 *	0.0000 *	0.0000 *
NBP[1]121*	0.0000 *	0.0000 *	0.0000 *	0.0000 *	0.0000 *	0.0000 *
NBP[1]147*	0.0000 *	0.0000 *	0.0000 *	0.0000 *	0.0000 *	0.0000 *
NBP[1]171*	0.0000 *	0.0000 *	0.0000 *	0.0000 *	0.0000 *	0.0000 *
NBP[1]195*	0.0000 *	0.0000 *	0.0000 *	0.0000 *	0.0000 *	0.0000 *
NBP[1]222*	0.0000 *	0.0000 *	0.0000 *	0.0000 *	0.0000 *	0.0000 *
NBP[1]248*	0.0000 *	0.0000 *	0.0000 *	0.0000 *	0.0000 *	0.0000 *

Licensed to: PETROCHEMICAL ENGINEERIN
* Specified by user.

Material Stream: Gas-PRD (continued)

Fluid Package: Basis-1
Property Package: Peng-Robinson

COMPOSITION

Overall Phase (continued)

Vapour Fraction ---

COMPONENTS	MOLAR FLOW (kgmole/h)	MOLE FRACTION	MASS FLOW (tonne/d)	MASS FRACTION	LIQUID VOLUME FLOW (m3/h)	LIQUID VOLUME FRACTION
NBP[1]273*	0.0000 *	0.0000 *	0.0000 *	0.0000 *	0.0000 *	0.0000 *
NBP[1]299*	0.0000 *	0.0000 *	0.0000 *	0.0000 *	0.0000 *	0.0000 *
NBP[1]325*	0.0000 *	0.0000 *	0.0000 *	0.0000 *	0.0000 *	0.0000 *
NBP[1]351*	0.0000 *	0.0000 *	0.0000 *	0.0000 *	0.0000 *	0.0000 *
NBP[1]377*	0.0000 *	0.0000 *	0.0000 *	0.0000 *	0.0000 *	0.0000 *
NBP[1]402*	0.0000 *	0.0000 *	0.0000 *	0.0000 *	0.0000 *	0.0000 *
NBP[1]428*	0.0000 *	0.0000 *	0.0000 *	0.0000 *	0.0000 *	0.0000 *
NBP[1]454*	0.0000 *	0.0000 *	0.0000 *	0.0000 *	0.0000 *	0.0000 *
NBP[1]480*	0.0000 *	0.0000 *	0.0000 *	0.0000 *	0.0000 *	0.0000 *
NBP[1]505*	0.0000 *	0.0000 *	0.0000 *	0.0000 *	0.0000 *	0.0000 *
NBP[1]531*	0.0000 *	0.0000 *	0.0000 *	0.0000 *	0.0000 *	0.0000 *
NBP[1]557*	0.0000 *	0.0000 *	0.0000 *	0.0000 *	0.0000 *	0.0000 *
NBP[1]582*	0.0000 *	0.0000 *	0.0000 *	0.0000 *	0.0000 *	0.0000 *
NBP[1]608*	0.0000 *	0.0000 *	0.0000 *	0.0000 *	0.0000 *	0.0000 *
NBP[1]634*	0.0000 *	0.0000 *	0.0000 *	0.0000 *	0.0000 *	0.0000 *
NBP[1]659*	0.0000 *	0.0000 *	0.0000 *	0.0000 *	0.0000 *	0.0000 *
NBP[1]685*	0.0000 *	0.0000 *	0.0000 *	0.0000 *	0.0000 *	0.0000 *
NBP[1]711*	0.0000 *	0.0000 *	0.0000 *	0.0000 *	0.0000 *	0.0000 *
NBP[1]736*	0.0000 *	0.0000 *	0.0000 *	0.0000 *	0.0000 *	0.0000 *
NBP[1]762*	0.0000 *	0.0000 *	0.0000 *	0.0000 *	0.0000 *	0.0000 *
NBP[1]788*	0.0000 *	0.0000 *	0.0000 *	0.0000 *	0.0000 *	0.0000 *
NBP[1]825*	0.0000 *	0.0000 *	0.0000 *	0.0000 *	0.0000 *	0.0000 *
NBP[1]873*	0.0000 *	0.0000 *	0.0000 *	0.0000 *	0.0000 *	0.0000 *
NBP[1]926*	0.0000 *	0.0000 *	0.0000 *	0.0000 *	0.0000 *	0.0000 *
NBP[1]978*	0.0000 *	0.0000 *	0.0000 *	0.0000 *	0.0000 *	0.0000 *
NBP[1]1021*	0.0000 *	0.0000 *	0.0000 *	0.0000 *	0.0000 *	0.0000 *
NBP[1]1075*	0.0000 *	0.0000 *	0.0000 *	0.0000 *	0.0000 *	0.0000 *
NBP[1]1123*	0.0000 *	0.0000 *	0.0000 *	0.0000 *	0.0000 *	0.0000 *
NBP[1]1173*	0.0000 *	0.0000 *	0.0000 *	0.0000 *	0.0000 *	0.0000 *
NBP[1]1250*	0.0000 *	0.0000 *	0.0000 *	0.0000 *	0.0000 *	0.0000 *
NBP[1]1339*	0.0000 *	0.0000 *	0.0000 *	0.0000 *	0.0000 *	0.0000 *
NBP[1]1432*	0.0000 *	0.0000 *	0.0000 *	0.0000 *	0.0000 *	0.0000 *
NBP[1]1528*	0.0000 *	0.0000 *	0.0000 *	0.0000 *	0.0000 *	0.0000 *
NBP[1]1637*	0.0000 *	0.0000 *	0.0000 *	0.0000 *	0.0000 *	0.0000 *
NBP[1]1732*	0.0000 *	0.0000 *	0.0000 *	0.0000 *	0.0000 *	0.0000 *
NBP[1]1819*	0.0000 *	0.0000 *	0.0000 *	0.0000 *	0.0000 *	0.0000 *
NBP[1]1913*	0.0000 *	0.0000 *	0.0000 *	0.0000 *	0.0000 *	0.0000 *
Total	268.9582	1.0000	139.4139	1.0000	16.0619	1.0000

Material Stream: Pandhi-

Fluid Package: Basis-1
Property Package: Peng-Robinson

CONDITIONS

		Overall	Vapour Phase	Liquid Phase	Aqueous Phase
Vapour / Phase Fraction		0.6833	0.6833	0.0455	0.2712
Temperature:	(F)	85.00 *	85.00	85.00	85.00
Pressure:	(psig)	450.0 *	450.0	450.0	450.0
Molar Flow	(MMSCFD)	7.874	5.380	0.3586	2.135
Mass Flow	(tonne/d)	237.5	137.5	54.03	46.00
Std Ideal Liq Vol Flow	(barrel/day)	3142	2402	450.0	290.0
Molar Enthalpy	(kJ/kgmole)	-1.516e+005	-8.928e+004	-2.868e+005	-2.859e+005
Molar Entropy	(kJ/kgmole-C)	133.6	159.2	218.5	54.86
Heat Flow	(MMBtu/hr)	-56.34	-22.68	-4.856	-28.81
Liq Vol Flow @Std Cond	(barrel/day)	2.954e+005 *	9.526e+005	434.8	285.1

* Specified by user.

Material Stream: Pandhi- (continued)

Fluid Package: Basis-1
Property Package: Peng-Robinson

PROPERTIES

	Overall	Vapour Phase	Liquid Phase	Aqueous Phase
Molecular Weight	25.24	21.38	126.0	18.03
Molar Density (kgmole/m3)	2.032	1.424	6.091	55.76
Mass Density (kg/m3)	51.28	30.45	767.6	1005
Act. Volume Flow (barrel/day)	2.914e+004	2.841e+004	442.7	287.9
Mass Enthalpy (kJ/kg)	-6006	-4175	-2276	-1.586e+004
Mass Entropy (kJ/kg-C)	5.293	7.444	1.734	3.043
Heat Capacity (kJ/kgmole-C)	64.84	47.20	253.3	77.64
Mass Heat Capacity (kJ/kg-C)	2.569	2.207	2.010	4.307
LHV Molar Basis (Std) (Btu/SCF)	---	---	---	1.835e-004
LHV Mass Basis (Std) (kJ/kg)	---	---	---	8.987e-003
Phase Fraction [Vol. Basis]	0.7645	0.7645	0.1432	9.229e-002
Phase Fraction [Mass Basis]	0.5789	0.5789	0.2274	0.1937
Partial Pressure of CO2 (psig)	1.138	---	---	---
Cost Based on Flow (Cost/s)	0.0000	0.0000	0.0000	0.0000
Act. Gas Flow (ACT_m3/h)	188.2	188.2	---	---
Avg. Liq. Density (kgmole/m3)	18.84	16.84	5.992	55.35
Specific Heat (kJ/kgmole-C)	64.84	47.20	253.3	77.64
Std. Gas Flow (STD_m3/h)	9272	6336	422.3	2514
Std. Ideal Liq. Mass Density (kg/m3)	475.5	360.1	755.2	997.8
Act. Liq. Flow (barrel/day)	730.6	---	442.7	287.9
Z Factor	---	0.8944	0.2091	2.284e-002
Watson K	15.58	17.28	11.99	8.497
User Property	---	---	---	---
Partial Pressure of H2S (psig)	-14.70	---	---	---
Cp/(Cp - R)	1.147	1.214	1.034	1.120
Cp/Cv	1.164	1.389	1.034	1.149
Heat of Vap. (kJ/kgmole)	6.864e+004	---	---	---
Kinematic Viscosity (cSt)	---	0.3953	11.77	0.8027
Liq. Mass Density (Std. Cond) (kg/m3)	5.058	0.9080	781.4	1015
Liq. Vol. Flow (Std. Cond) (barrel/day)	2.954e+005	9.526e+005	434.8	285.1
Liquid Fraction	0.3167	0.0000	1.000	1.000
Molar Volume (m3/kgmole)	0.4922	0.7023	0.1642	1.793e-002
Mass Heat of Vap. (kJ/kg)	2720	---	---	---
Phase Fraction [Molar Basis]	0.6833	0.6833	0.0455	0.2712
Surface Tension (dyne/cm)	---	---	15.90	71.30
Thermal Conductivity (W/m-K)	---	3.307e-002	0.1005	0.6175
Viscosity (cP)	---	1.204e-002	9.037	0.8068
Cv (Semi-Ideal) (kJ/kgmole-C)	56.53	38.88	245.0	69.33
Mass Cv (Semi-Ideal) (kJ/kg-C)	2.240	1.818	1.944	3.846
Cv (kJ/kgmole-C)	55.70	33.97	245.0	67.55
Mass Cv (kJ/kg-C)	2.207	1.589	1.944	3.748
Cv (Ent. Method) (kJ/kgmole-C)	---	-3703	---	67.05
Mass Cv (Ent. Method) (kJ/kg-C)	---	-173.2	---	3.720
Cp/Cv (Ent. Method)	---	-1.275e-002	---	1.158
Reid VP at 37.8 C (psig)	3319	---	98.95	---
True VP at 37.8 C (psig)	6318	4184	480.8	17.45
Liq. Vol. Flow - Sum(Std. Cond) (barrel/day)	9.533e+005	9.526e+005	434.8	285.1
HHV Molar Basis (Std) (Btu/SCF)	---	---	---	46.45
HHV Mass Basis (Std) (kJ/kg)	---	---	---	2274
CO2 Loading	---	---	---	---
CO2 App ML Con (kgmole/m3)	---	---	8.249e-002	2.230e-002
CO2 App WT Con (kgmol/kg)	---	---	1.075e-004	2.219e-005
Phase Fraction [Act. Vol. Basis]	0.9749	0.9749	1.519e-002	9.880e-003
Mass Exergy (kJ/kg)	234.0	---	---	---
Viscosity Index	-12.15	---	---	---
Ideal Gas Cp/Cv	1.217	1.249	1.043	1.329
Ideal Gas Cp (kJ/kgmole-C)	46.72	41.73	199.6	33.60

* Specified by user.

Material Stream: Pandhi- (continued)

Fluid Package: Basis-1
Property Package: Peng-Robinson

PROPERTIES

	Overall	Vapour Phase	Liquid Phase	Aqueous Phase
Mass Ideal Gas Cp (kJ/kg-C)	1.851	1.951	1.584	1.864
Bubble Point Pressure (psig)	6241	---	---	---

COMPOSITION

Overall Phase

Vapour Fraction 0.6833

COMPONENTS	MOLAR FLOW (kgmole/h)	MOLE FRACTION	MASS FLOW (tonne/d)	MASS FRACTION	LIQUID VOLUME FLOW (m3/h)	LIQUID VOLUME FRACTION
Methane	207.0440	0.5280	79.7181	0.3356	11.0944	0.5330
Ethane	28.8006	0.0734	20.7848	0.0875	2.4348	0.1170
Propane	15.2677	0.0389	16.1583	0.0680	1.3288	0.0638
i-Butane	2.0287	0.0052	2.8300	0.0119	0.2098	0.0101
n-Butane	3.9513	0.0101	5.5120	0.0232	0.3938	0.0189
i-Pentane	0.8495	0.0022	1.4710	0.0062	0.0983	0.0047
n-Pentane	0.9602	0.0024	1.6627	0.0070	0.1100	0.0053
n-Hexane	1.4698	0.0037	3.0399	0.0128	0.1911	0.0092
Nitrogen	5.5989	0.0143	3.7642	0.0158	0.1945	0.0093
CO2	9.4151	0.0240	9.9445	0.0419	0.5020	0.0241
H2S	0.0006	0.0000	0.0005	0.0000	0.0000	0.0000
H2O	106.6990	0.2721	46.1326	0.1942	1.9261	0.0925
NBP[1]95*	0.2883	0.0007	0.4699	0.0020	0.0288	0.0014
NBP[1]121*	0.3381	0.0009	0.5912	0.0025	0.0358	0.0017
NBP[1]147*	0.4314	0.0011	0.8304	0.0035	0.0494	0.0024
NBP[1]171*	0.8224	0.0021	1.7306	0.0073	0.1013	0.0049
NBP[1]195*	1.0758	0.0027	2.4160	0.0102	0.1398	0.0067
NBP[1]222*	0.8003	0.0020	1.9331	0.0081	0.1105	0.0053
NBP[1]248*	0.6657	0.0017	1.7287	0.0073	0.0976	0.0047
NBP[1]273*	0.5358	0.0014	1.4881	0.0063	0.0831	0.0040
NBP[1]299*	0.4185	0.0011	1.2393	0.0052	0.0684	0.0033
NBP[1]325*	0.3029	0.0008	0.9528	0.0040	0.0521	0.0025
NBP[1]351*	0.2456	0.0006	0.8214	0.0035	0.0445	0.0021
NBP[1]377*	0.2247	0.0006	0.8014	0.0034	0.0429	0.0021
NBP[1]402*	0.2061	0.0005	0.7838	0.0033	0.0416	0.0020
NBP[1]428*	0.1961	0.0005	0.7956	0.0033	0.0418	0.0020
NBP[1]454*	0.1956	0.0005	0.8480	0.0036	0.0441	0.0021
NBP[1]480*	0.1982	0.0005	0.9182	0.0039	0.0473	0.0023
NBP[1]505*	0.1920	0.0005	0.9484	0.0040	0.0484	0.0023
NBP[1]531*	0.1852	0.0005	0.9740	0.0041	0.0492	0.0024
NBP[1]557*	0.1784	0.0005	0.9978	0.0042	0.0500	0.0024
NBP[1]582*	0.1706	0.0004	1.0132	0.0043	0.0503	0.0024
NBP[1]608*	0.1643	0.0004	1.0351	0.0044	0.0510	0.0025
NBP[1]634*	0.1611	0.0004	1.0753	0.0045	0.0526	0.0025
NBP[1]659*	0.1586	0.0004	1.1194	0.0047	0.0543	0.0026
NBP[1]685*	0.1641	0.0004	1.2227	0.0051	0.0588	0.0028
NBP[1]711*	0.1715	0.0004	1.3445	0.0057	0.0642	0.0031
NBP[1]736*	0.1697	0.0004	1.3915	0.0059	0.0659	0.0032
NBP[1]762*	0.1653	0.0004	1.4214	0.0060	0.0669	0.0032
NBP[1]788*	0.1585	0.0004	1.4424	0.0061	0.0674	0.0032
NBP[1]825*	0.2655	0.0007	2.5963	0.0109	0.1201	0.0058
NBP[1]873*	0.1830	0.0005	1.9404	0.0082	0.0887	0.0043
NBP[1]926*	0.1437	0.0004	1.6472	0.0069	0.0744	0.0036
NBP[1]978*	0.1474	0.0004	1.8524	0.0078	0.0825	0.0040
NBP[1]1021*	0.0728	0.0002	0.9655	0.0041	0.0426	0.0020
NBP[1]1075*	0.0449	0.0001	0.6310	0.0027	0.0276	0.0013
NBP[1]1123*	0.0417	0.0001	0.6267	0.0026	0.0271	0.0013
NBP[1]1173*	0.0300	0.0001	0.4772	0.0020	0.0205	0.0010
NBP[1]1250*	0.0393	0.0001	0.6767	0.0028	0.0287	0.0014

* Specified by user.

Material Stream: Pandhi- (continued)

Fluid Package: Basis-1
Property Package: Peng-Robinson

COMPOSITION

Overall Phase (continued)

Vapour Fraction 0.6833

COMPONENTS	MOLAR FLOW (kgmole/h)	MOLE FRACTION	MASS FLOW (tonne/d)	MASS FRACTION	LIQUID VOLUME FLOW (m3/h)	LIQUID VOLUME FRACTION
NBP[1]1339*	0.0364	0.0001	0.6999	0.0029	0.0291	0.0014
NBP[1]1432*	0.0257	0.0001	0.5397	0.0023	0.0221	0.0011
NBP[1]1528*	0.0180	0.0000	0.4082	0.0017	0.0165	0.0008
NBP[1]1637*	0.0127	0.0000	0.3047	0.0013	0.0122	0.0006
NBP[1]1732*	0.0101	0.0000	0.2565	0.0011	0.0101	0.0005
NBP[1]1819*	0.0097	0.0000	0.2590	0.0011	0.0101	0.0005
NBP[1]1913*	0.0112	0.0000	0.3148	0.0013	0.0121	0.0006
Total	392.1623	1.0000	237.5489	1.0000	20.8162	1.0000

Vapour Phase

Phase Fraction 0.6833

COMPONENTS	MOLAR FLOW (kgmole/h)	MOLE FRACTION	MASS FLOW (tonne/d)	MASS FRACTION	LIQUID VOLUME FLOW (m3/h)	LIQUID VOLUME FRACTION
Methane	204.9954	0.7650	78.9293	0.5739	10.9846	0.6902
Ethane	27.6428	0.1032	19.9492	0.1451	2.3370	0.1468
Propane	13.5786	0.0507	14.3706	0.1045	1.1818	0.0743
i-Butane	1.5846	0.0059	2.2105	0.0161	0.1639	0.0103
n-Butane	2.8799	0.0107	4.0174	0.0292	0.2870	0.0180
i-Pentane	0.4627	0.0017	0.8013	0.0058	0.0536	0.0034
n-Pentane	0.4645	0.0017	0.8044	0.0058	0.0532	0.0033
n-Hexane	0.3692	0.0014	0.7636	0.0056	0.0480	0.0030
Nitrogen	5.5749	0.0208	3.7480	0.0273	0.1937	0.0122
CO2	9.1306	0.0341	9.6441	0.0701	0.4869	0.0306
H2S	0.0005	0.0000	0.0004	0.0000	0.0000	0.0000
H2O	0.3934	0.0015	0.1701	0.0012	0.0071	0.0004
NBP[1]95*	0.1423	0.0005	0.2320	0.0017	0.0142	0.0009
NBP[1]121*	0.1317	0.0005	0.2302	0.0017	0.0139	0.0009
NBP[1]147*	0.1253	0.0005	0.2411	0.0018	0.0143	0.0009
NBP[1]171*	0.1732	0.0006	0.3645	0.0027	0.0213	0.0013
NBP[1]195*	0.1580	0.0006	0.3548	0.0026	0.0205	0.0013
NBP[1]222*	0.0733	0.0003	0.1771	0.0013	0.0101	0.0006
NBP[1]248*	0.0376	0.0001	0.0977	0.0007	0.0055	0.0003
NBP[1]273*	0.0182	0.0001	0.0505	0.0004	0.0028	0.0002
NBP[1]299*	0.0083	0.0000	0.0246	0.0002	0.0014	0.0001
NBP[1]325*	0.0034	0.0000	0.0106	0.0001	0.0006	0.0000
NBP[1]351*	0.0015	0.0000	0.0050	0.0000	0.0003	0.0000
NBP[1]377*	0.0007	0.0000	0.0026	0.0000	0.0001	0.0000
NBP[1]402*	0.0003	0.0000	0.0013	0.0000	0.0001	0.0000
NBP[1]428*	0.0002	0.0000	0.0007	0.0000	0.0000	0.0000
NBP[1]454*	0.0001	0.0000	0.0004	0.0000	0.0000	0.0000
NBP[1]480*	0.0000	0.0000	0.0002	0.0000	0.0000	0.0000
NBP[1]505*	0.0000	0.0000	0.0001	0.0000	0.0000	0.0000
NBP[1]531*	0.0000	0.0000	0.0000	0.0000	0.0000	0.0000
NBP[1]557*	0.0000	0.0000	0.0000	0.0000	0.0000	0.0000
NBP[1]582*	0.0000	0.0000	0.0000	0.0000	0.0000	0.0000
NBP[1]608*	0.0000	0.0000	0.0000	0.0000	0.0000	0.0000
NBP[1]634*	0.0000	0.0000	0.0000	0.0000	0.0000	0.0000
NBP[1]659*	0.0000	0.0000	0.0000	0.0000	0.0000	0.0000
NBP[1]685*	0.0000	0.0000	0.0000	0.0000	0.0000	0.0000
NBP[1]711*	0.0000	0.0000	0.0000	0.0000	0.0000	0.0000
NBP[1]736*	0.0000	0.0000	0.0000	0.0000	0.0000	0.0000
NBP[1]762*	0.0000	0.0000	0.0000	0.0000	0.0000	0.0000
NBP[1]788*	0.0000	0.0000	0.0000	0.0000	0.0000	0.0000
NBP[1]825*	0.0000	0.0000	0.0000	0.0000	0.0000	0.0000
NBP[1]873*	0.0000	0.0000	0.0000	0.0000	0.0000	0.0000

* Specified by user.

Material Stream: Pandhi- (continued)

Fluid Package: Basis-1
Property Package: Peng-Robinson

COMPOSITION

Vapour Phase (continued)

Phase Fraction 0.6833

COMPONENTS	MOLAR FLOW (kgmole/h)	MOLE FRACTION	MASS FLOW (tonne/d)	MASS FRACTION	LIQUID VOLUME FLOW (m3/h)	LIQUID VOLUME FRACTION
NBP[1]926*	0.0000	0.0000	0.0000	0.0000	0.0000	0.0000
NBP[1]978*	0.0000	0.0000	0.0000	0.0000	0.0000	0.0000
NBP[1]1021*	0.0000	0.0000	0.0000	0.0000	0.0000	0.0000
NBP[1]1075*	0.0000	0.0000	0.0000	0.0000	0.0000	0.0000
NBP[1]1123*	0.0000	0.0000	0.0000	0.0000	0.0000	0.0000
NBP[1]1173*	0.0000	0.0000	0.0000	0.0000	0.0000	0.0000
NBP[1]1250*	0.0000	0.0000	0.0000	0.0000	0.0000	0.0000
NBP[1]1339*	0.0000	0.0000	0.0000	0.0000	0.0000	0.0000
NBP[1]1432*	0.0000	0.0000	0.0000	0.0000	0.0000	0.0000
NBP[1]1528*	0.0000	0.0000	0.0000	0.0000	0.0000	0.0000
NBP[1]1637*	0.0000	0.0000	0.0000	0.0000	0.0000	0.0000
NBP[1]1732*	0.0000	0.0000	0.0000	0.0000	0.0000	0.0000
NBP[1]1819*	0.0001	0.0000	0.0033	0.0000	0.0001	0.0000
NBP[1]1913*	0.0112	0.0000	0.3148	0.0023	0.0121	0.0008
Total	267.9625	1.0000	137.5201	1.0000	15.9142	1.0000

Liquid Phase

Phase Fraction 4.555e-002

COMPONENTS	MOLAR FLOW (kgmole/h)	MOLE FRACTION	MASS FLOW (tonne/d)	MASS FRACTION	LIQUID VOLUME FLOW (m3/h)	LIQUID VOLUME FRACTION
Methane	2.0486	0.1147	0.7888	0.0146	0.1098	0.0368
Ethane	1.1578	0.0648	0.8356	0.0155	0.0979	0.0328
Propane	1.6892	0.0946	1.7877	0.0331	0.1470	0.0493
i-Butane	0.4441	0.0249	0.6195	0.0115	0.0459	0.0154
n-Butane	1.0714	0.0600	1.4946	0.0277	0.1068	0.0358
i-Pentane	0.3868	0.0217	0.6697	0.0124	0.0448	0.0150
n-Pentane	0.4957	0.0278	0.8584	0.0159	0.0568	0.0191
n-Hexane	1.1006	0.0616	2.2764	0.0421	0.1431	0.0480
Nitrogen	0.0232	0.0013	0.0156	0.0003	0.0008	0.0003
CO2	0.2419	0.0135	0.2555	0.0047	0.0129	0.0043
H2S	0.0000	0.0000	0.0000	0.0000	0.0000	0.0000
H2O	0.0108	0.0006	0.0047	0.0001	0.0002	0.0001
NBP[1]95*	0.1460	0.0082	0.2380	0.0044	0.0146	0.0049
NBP[1]121*	0.2065	0.0116	0.3610	0.0067	0.0218	0.0073
NBP[1]147*	0.3062	0.0171	0.5893	0.0109	0.0350	0.0118
NBP[1]171*	0.6492	0.0363	1.3661	0.0253	0.0800	0.0268
NBP[1]195*	0.9178	0.0514	2.0612	0.0382	0.1193	0.0400
NBP[1]222*	0.7270	0.0407	1.7560	0.0325	0.1004	0.0337
NBP[1]248*	0.6280	0.0352	1.6311	0.0302	0.0921	0.0309
NBP[1]273*	0.5176	0.0290	1.4376	0.0266	0.0803	0.0269
NBP[1]299*	0.4102	0.0230	1.2147	0.0225	0.0671	0.0225
NBP[1]325*	0.2995	0.0168	0.9422	0.0174	0.0515	0.0173
NBP[1]351*	0.2441	0.0137	0.8164	0.0151	0.0442	0.0148
NBP[1]377*	0.2240	0.0125	0.7988	0.0148	0.0428	0.0144
NBP[1]402*	0.2058	0.0115	0.7825	0.0145	0.0415	0.0139
NBP[1]428*	0.1959	0.0110	0.7949	0.0147	0.0417	0.0140
NBP[1]454*	0.1955	0.0109	0.8477	0.0157	0.0441	0.0148
NBP[1]480*	0.1981	0.0111	0.9180	0.0170	0.0473	0.0159
NBP[1]505*	0.1920	0.0107	0.9483	0.0176	0.0484	0.0162
NBP[1]531*	0.1852	0.0104	0.9740	0.0180	0.0492	0.0165
NBP[1]557*	0.1784	0.0100	0.9978	0.0185	0.0500	0.0168
NBP[1]582*	0.1706	0.0095	1.0132	0.0188	0.0503	0.0169
NBP[1]608*	0.1643	0.0092	1.0351	0.0192	0.0510	0.0171
NBP[1]634*	0.1611	0.0090	1.0753	0.0199	0.0526	0.0176
NBP[1]659*	0.1586	0.0089	1.1194	0.0207	0.0543	0.0182

* Specified by user.

Material Stream: Pandhi- (continued)

Fluid Package: Basis-1
Property Package: Peng-Robinson

COMPOSITION

Liquid Phase (continued)

Phase Fraction 4.555e-002

COMPONENTS	MOLAR FLOW (kgmole/h)	MOLE FRACTION	MASS FLOW (tonne/d)	MASS FRACTION	LIQUID VOLUME FLOW (m3/h)	LIQUID VOLUME FRACTION
NBP[1]685*	0.1641	0.0092	1.2227	0.0226	0.0588	0.0197
NBP[1]711*	0.1715	0.0096	1.3445	0.0249	0.0642	0.0215
NBP[1]736*	0.1697	0.0095	1.3915	0.0258	0.0659	0.0221
NBP[1]762*	0.1653	0.0093	1.4214	0.0263	0.0669	0.0224
NBP[1]788*	0.1585	0.0089	1.4424	0.0267	0.0674	0.0226
NBP[1]825*	0.2655	0.0149	2.5963	0.0481	0.1201	0.0403
NBP[1]873*	0.1830	0.0102	1.9404	0.0359	0.0887	0.0298
NBP[1]926*	0.1437	0.0080	1.6472	0.0305	0.0744	0.0250
NBP[1]978*	0.1474	0.0082	1.8524	0.0343	0.0825	0.0277
NBP[1]1021*	0.0728	0.0041	0.9655	0.0179	0.0426	0.0143
NBP[1]1075*	0.0449	0.0025	0.6310	0.0117	0.0276	0.0093
NBP[1]1123*	0.0417	0.0023	0.6267	0.0116	0.0271	0.0091
NBP[1]1173*	0.0300	0.0017	0.4772	0.0088	0.0205	0.0069
NBP[1]1250*	0.0393	0.0022	0.6767	0.0125	0.0287	0.0096
NBP[1]1339*	0.0364	0.0020	0.6999	0.0130	0.0291	0.0098
NBP[1]1432*	0.0257	0.0014	0.5397	0.0100	0.0221	0.0074
NBP[1]1528*	0.0180	0.0010	0.4082	0.0076	0.0165	0.0055
NBP[1]1637*	0.0127	0.0007	0.3047	0.0056	0.0122	0.0041
NBP[1]1732*	0.0101	0.0006	0.2565	0.0047	0.0101	0.0034
NBP[1]1819*	0.0096	0.0005	0.2557	0.0047	0.0100	0.0033
NBP[1]1913*	0.0000	0.0000	0.0000	0.0000	0.0000	0.0000
Total	17.8617	1.0000	54.0255	1.0000	2.9809	1.0000

Aqueous Phase

Phase Fraction 0.2712

COMPONENTS	MOLAR FLOW (kgmole/h)	MOLE FRACTION	MASS FLOW (tonne/d)	MASS FRACTION	LIQUID VOLUME FLOW (m3/h)	LIQUID VOLUME FRACTION
Methane	0.0000	0.0000	0.0000	0.0000	0.0000	0.0000
Ethane	0.0000	0.0000	0.0000	0.0000	0.0000	0.0000
Propane	0.0000	0.0000	0.0000	0.0000	0.0000	0.0000
i-Butane	0.0000	0.0000	0.0000	0.0000	0.0000	0.0000
n-Butane	0.0000	0.0000	0.0000	0.0000	0.0000	0.0000
i-Pentane	0.0000	0.0000	0.0000	0.0000	0.0000	0.0000
n-Pentane	0.0000	0.0000	0.0000	0.0000	0.0000	0.0000
n-Hexane	0.0000	0.0000	0.0000	0.0000	0.0000	0.0000
Nitrogen	0.0008	0.0000	0.0006	0.0000	0.0000	0.0000
CO2	0.0425	0.0004	0.0449	0.0010	0.0023	0.0012
H2S	0.0000	0.0000	0.0000	0.0000	0.0000	0.0000
H2O	106.2948	0.9996	45.9579	0.9990	1.9188	0.9988
NBP[1]95*	0.0000	0.0000	0.0000	0.0000	0.0000	0.0000
NBP[1]121*	0.0000	0.0000	0.0000	0.0000	0.0000	0.0000
NBP[1]147*	0.0000	0.0000	0.0000	0.0000	0.0000	0.0000
NBP[1]171*	0.0000	0.0000	0.0000	0.0000	0.0000	0.0000
NBP[1]195*	0.0000	0.0000	0.0000	0.0000	0.0000	0.0000
NBP[1]222*	0.0000	0.0000	0.0000	0.0000	0.0000	0.0000
NBP[1]248*	0.0000	0.0000	0.0000	0.0000	0.0000	0.0000
NBP[1]273*	0.0000	0.0000	0.0000	0.0000	0.0000	0.0000
NBP[1]299*	0.0000	0.0000	0.0000	0.0000	0.0000	0.0000
NBP[1]325*	0.0000	0.0000	0.0000	0.0000	0.0000	0.0000
NBP[1]351*	0.0000	0.0000	0.0000	0.0000	0.0000	0.0000
NBP[1]377*	0.0000	0.0000	0.0000	0.0000	0.0000	0.0000
NBP[1]402*	0.0000	0.0000	0.0000	0.0000	0.0000	0.0000
NBP[1]428*	0.0000	0.0000	0.0000	0.0000	0.0000	0.0000
NBP[1]454*	0.0000	0.0000	0.0000	0.0000	0.0000	0.0000
NBP[1]480*	0.0000	0.0000	0.0000	0.0000	0.0000	0.0000

* Specified by user.

Material Stream: Pandhi- (continued)

Fluid Package: Basis-1
Property Package: Peng-Robinson

COMPOSITION

Aqueous Phase (continued)

Phase Fraction 0.2712

COMPONENTS	MOLAR FLOW (kgmole/h)	MOLE FRACTION	MASS FLOW (tonne/d)	MASS FRACTION	LIQUID VOLUME FLOW (m3/h)	LIQUID VOLUME FRACTION
NBP[1]505*	0.0000	0.0000	0.0000	0.0000	0.0000	0.0000
NBP[1]531*	0.0000	0.0000	0.0000	0.0000	0.0000	0.0000
NBP[1]557*	0.0000	0.0000	0.0000	0.0000	0.0000	0.0000
NBP[1]582*	0.0000	0.0000	0.0000	0.0000	0.0000	0.0000
NBP[1]608*	0.0000	0.0000	0.0000	0.0000	0.0000	0.0000
NBP[1]634*	0.0000	0.0000	0.0000	0.0000	0.0000	0.0000
NBP[1]659*	0.0000	0.0000	0.0000	0.0000	0.0000	0.0000
NBP[1]685*	0.0000	0.0000	0.0000	0.0000	0.0000	0.0000
NBP[1]711*	0.0000	0.0000	0.0000	0.0000	0.0000	0.0000
NBP[1]736*	0.0000	0.0000	0.0000	0.0000	0.0000	0.0000
NBP[1]762*	0.0000	0.0000	0.0000	0.0000	0.0000	0.0000
NBP[1]788*	0.0000	0.0000	0.0000	0.0000	0.0000	0.0000
NBP[1]825*	0.0000	0.0000	0.0000	0.0000	0.0000	0.0000
NBP[1]873*	0.0000	0.0000	0.0000	0.0000	0.0000	0.0000
NBP[1]926*	0.0000	0.0000	0.0000	0.0000	0.0000	0.0000
NBP[1]978*	0.0000	0.0000	0.0000	0.0000	0.0000	0.0000
NBP[1]1021*	0.0000	0.0000	0.0000	0.0000	0.0000	0.0000
NBP[1]1075*	0.0000	0.0000	0.0000	0.0000	0.0000	0.0000
NBP[1]1123*	0.0000	0.0000	0.0000	0.0000	0.0000	0.0000
NBP[1]1173*	0.0000	0.0000	0.0000	0.0000	0.0000	0.0000
NBP[1]1250*	0.0000	0.0000	0.0000	0.0000	0.0000	0.0000
NBP[1]1339*	0.0000	0.0000	0.0000	0.0000	0.0000	0.0000
NBP[1]1432*	0.0000	0.0000	0.0000	0.0000	0.0000	0.0000
NBP[1]1528*	0.0000	0.0000	0.0000	0.0000	0.0000	0.0000
NBP[1]1637*	0.0000	0.0000	0.0000	0.0000	0.0000	0.0000
NBP[1]1732*	0.0000	0.0000	0.0000	0.0000	0.0000	0.0000
NBP[1]1819*	0.0000	0.0000	0.0000	0.0000	0.0000	0.0000
NBP[1]1913*	0.0000	0.0000	0.0000	0.0000	0.0000	0.0000
Total	106.3381	1.0000	46.0033	1.0000	1.9211	1.0000

Material Stream: PANDHI oil

Fluid Package: Basis-1
Property Package: Peng-Robinson

CONDITIONS

		Overall
Vapour / Phase Fraction		---
Temperature:	(F)	---
Pressure:	(psig)	450.0 *
Molar Flow	(MMSCFD)	0.1957
Mass Flow	(tonne/d)	45.85
Std Ideal Liq Vol Flow	(barrel/day)	346.1
Molar Enthalpy	(kJ/kgmole)	---
Molar Entropy	(kJ/kgmole-C)	---
Heat Flow	(MMBtu/hr)	---
Liq Vol Flow @Std Cond	(barrel/day)	346.1 *

PROPERTIES

		Overall
Molecular Weight		196.0
Molar Density	(kgmole/m3)	---
Mass Density	(kg/m3)	---
Act. Volume Flow	(barrel/day)	---
Mass Enthalpy	(kJ/kg)	---
Mass Entropy	(kJ/kg-C)	---

* Specified by user.

Material Stream: PANDHI oil (continued)

Fluid Package: Basis-1
Property Package: Peng-Robinson

PROPERTIES

	Overall
Heat Capacity (kJ/kgmole-C)	---
Mass Heat Capacity (kJ/kg-C)	---
LHV Molar Basis (Std) (Btu/SCF)	---
LHV Mass Basis (Std) (kJ/kg)	---
Phase Fraction [Vol. Basis]	0.0000
Phase Fraction [Mass Basis]	0.0000
Partial Pressure of CO2 (psig)	-14.70
Cost Based on Flow (Cost/s)	0.0000
Act. Gas Flow (ACT_m3/h)	---
Avg. Liq. Density (kgmole/m3)	4.251
Specific Heat (kJ/kgmole-C)	---
Std. Gas Flow (STD_m3/h)	230.4
Std. Ideal Liq. Mass Density (kg/m3)	833.3
Act. Liq. Flow (barrel/day)	---
Z Factor	---
Watson K	11.77
User Property	---
Partial Pressure of H2S (psig)	-14.70
Cp/(Cp - R)	---
Cp/Cv	---
Heat of Vap. (kJ/kgmole)	---
Kinematic Viscosity (cSt)	---
Liq. Mass Density (Std. Cond) (kg/m3)	833.3
Liq. Vol. Flow (Std. Cond) (barrel/day)	346.1
Liquid Fraction	---
Molar Volume (m3/kgmole)	---
Mass Heat of Vap. (kJ/kg)	---
Phase Fraction [Molar Basis]	---
Surface Tension (dyne/cm)	---
Thermal Conductivity (W/m-K)	---
Viscosity (cP)	---
Cv (Semi-Ideal) (kJ/kgmole-C)	---
Mass Cv (Semi-Ideal) (kJ/kg-C)	---
Cv (kJ/kgmole-C)	---
Mass Cv (kJ/kg-C)	---
Cv (Ent. Method) (kJ/kgmole-C)	---
Mass Cv (Ent. Method) (kJ/kg-C)	---
Cp/Cv (Ent. Method)	---
Reid VP at 37.8 C (psig)	---
True VP at 37.8 C (psig)	---
Liq. Vol. Flow - Sum(Std. Cond) (barrel/day)	0.0000
HHV Molar Basis (Std) (Btu/SCF)	---
HHV Mass Basis (Std) (kJ/kg)	---
CO2 Loading	---
CO2 App ML Con (kgmole/m3)	---
CO2 App WT Con (kgmol/kg)	0.0000
Phase Fraction [Act. Vol. Basis]	0.0000
Mass Exergy (kJ/kg)	9.739e+006
Viscosity Index	---
Ideal Gas Cp/Cv	1.000
Ideal Gas Cp (kJ/kgmole-C)	-5.304e+005
Mass Ideal Gas Cp (kJ/kg-C)	-2706
Bubble Point Pressure (psig)	---

Licensed to: PETROCHEMICAL ENGINEERIN
* Specified by user.

Material Stream: PANDHI oil (continued)

Fluid Package: Basis-1
Property Package: Peng-Robinson

COMPOSITION

Overall Phase

Vapour Fraction ---

COMPONENTS	MOLAR FLOW (kgmole/h)	MOLE FRACTION	MASS FLOW (tonne/d)	MASS FRACTION	LIQUID VOLUME FLOW (m3/h)	LIQUID VOLUME FRACTION
Methane	0.0000 *	0.0000 *	0.0000 *	0.0000 *	0.0000 *	0.0000 *
Ethane	0.0000 *	0.0000 *	0.0000 *	0.0000 *	0.0000 *	0.0000 *
Propane	0.0000 *	0.0000 *	0.0000 *	0.0000 *	0.0000 *	0.0000 *
i-Butane	0.0000 *	0.0000 *	0.0000 *	0.0000 *	0.0000 *	0.0000 *
n-Butane	0.0000 *	0.0000 *	0.0000 *	0.0000 *	0.0000 *	0.0000 *
i-Pentane	0.0000 *	0.0000 *	0.0000 *	0.0000 *	0.0000 *	0.0000 *
n-Pentane	0.0000 *	0.0000 *	0.0000 *	0.0000 *	0.0000 *	0.0000 *
n-Hexane	0.0000 *	0.0000 *	0.0000 *	0.0000 *	0.0000 *	0.0000 *
Nitrogen	0.0000 *	0.0000 *	0.0000 *	0.0000 *	0.0000 *	0.0000 *
CO2	0.0000 *	0.0000 *	0.0000 *	0.0000 *	0.0000 *	0.0000 *
H2S	0.0000 *	0.0000 *	0.0000 *	0.0000 *	0.0000 *	0.0000 *
H2O	0.0000 *	0.0000 *	0.0000 *	0.0000 *	0.0000 *	0.0000 *
NBP[1]95*	0.2390 *	0.0245 *	0.3897 *	0.0085 *	0.0239 *	0.0104 *
NBP[1]121*	0.2888 *	0.0296 *	0.5049 *	0.0110 *	0.0305 *	0.0133 *
NBP[1]147*	0.3822 *	0.0392 *	0.7356 *	0.0160 *	0.0437 *	0.0191 *
NBP[1]171*	0.7533 *	0.0773 *	1.5851 *	0.0346 *	0.0928 *	0.0405 *
NBP[1]195*	1.0134 *	0.1040 *	2.2759 *	0.0496 *	0.1317 *	0.0574 *
NBP[1]222*	0.7725 *	0.0793 *	1.8658 *	0.0407 *	0.1066 *	0.0465 *
NBP[1]248*	0.6522 *	0.0669 *	1.6937 *	0.0369 *	0.0956 *	0.0417 *
NBP[1]273*	0.5297 *	0.0544 *	1.4712 *	0.0321 *	0.0821 *	0.0358 *
NBP[1]299*	0.4159 *	0.0427 *	1.2317 *	0.0269 *	0.0680 *	0.0297 *
NBP[1]325*	0.3019 *	0.0310 *	0.9498 *	0.0207 *	0.0519 *	0.0227 *
NBP[1]351*	0.2452 *	0.0252 *	0.8201 *	0.0179 *	0.0444 *	0.0194 *
NBP[1]377*	0.2246 *	0.0230 *	0.8008 *	0.0175 *	0.0429 *	0.0187 *
NBP[1]402*	0.2060 *	0.0211 *	0.7836 *	0.0171 *	0.0416 *	0.0181 *
NBP[1]428*	0.1960 *	0.0201 *	0.7954 *	0.0173 *	0.0418 *	0.0182 *
NBP[1]454*	0.1956 *	0.0201 *	0.8479 *	0.0185 *	0.0441 *	0.0192 *
NBP[1]480*	0.1982 *	0.0203 *	0.9181 *	0.0200 *	0.0473 *	0.0206 *
NBP[1]505*	0.1920 *	0.0197 *	0.9484 *	0.0207 *	0.0484 *	0.0211 *
NBP[1]531*	0.1852 *	0.0190 *	0.9740 *	0.0212 *	0.0492 *	0.0215 *
NBP[1]557*	0.1784 *	0.0183 *	0.9978 *	0.0218 *	0.0500 *	0.0218 *
NBP[1]582*	0.1706 *	0.0175 *	1.0132 *	0.0221 *	0.0503 *	0.0220 *
NBP[1]608*	0.1643 *	0.0169 *	1.0351 *	0.0226 *	0.0510 *	0.0222 *
NBP[1]634*	0.1611 *	0.0165 *	1.0753 *	0.0235 *	0.0526 *	0.0229 *
NBP[1]659*	0.1586 *	0.0163 *	1.1194 *	0.0244 *	0.0543 *	0.0237 *
NBP[1]685*	0.1641 *	0.0168 *	1.2227 *	0.0267 *	0.0588 *	0.0257 *
NBP[1]711*	0.1715 *	0.0176 *	1.3445 *	0.0293 *	0.0642 *	0.0280 *
NBP[1]736*	0.1697 *	0.0174 *	1.3915 *	0.0303 *	0.0659 *	0.0288 *
NBP[1]762*	0.1653 *	0.0170 *	1.4214 *	0.0310 *	0.0669 *	0.0292 *
NBP[1]788*	0.1585 *	0.0163 *	1.4424 *	0.0315 *	0.0674 *	0.0294 *
NBP[1]825*	0.2655 *	0.0272 *	2.5963 *	0.0566 *	0.1201 *	0.0524 *
NBP[1]873*	0.1830 *	0.0188 *	1.9404 *	0.0423 *	0.0887 *	0.0387 *
NBP[1]926*	0.1437 *	0.0147 *	1.6472 *	0.0359 *	0.0744 *	0.0325 *
NBP[1]978*	0.1474 *	0.0151 *	1.8524 *	0.0404 *	0.0825 *	0.0360 *
NBP[1]1021*	0.0728 *	0.0075 *	0.9655 *	0.0211 *	0.0426 *	0.0186 *
NBP[1]1075*	0.0449 *	0.0046 *	0.6310 *	0.0138 *	0.0276 *	0.0120 *
NBP[1]1123*	0.0417 *	0.0043 *	0.6267 *	0.0137 *	0.0271 *	0.0118 *
NBP[1]1173*	0.0300 *	0.0031 *	0.4772 *	0.0104 *	0.0205 *	0.0089 *
NBP[1]1250*	0.0393 *	0.0040 *	0.6767 *	0.0148 *	0.0287 *	0.0125 *
NBP[1]1339*	0.0364 *	0.0037 *	0.6999 *	0.0153 *	0.0291 *	0.0127 *
NBP[1]1432*	0.0257 *	0.0026 *	0.5397 *	0.0118 *	0.0221 *	0.0097 *
NBP[1]1528*	0.0180 *	0.0018 *	0.4082 *	0.0089 *	0.0165 *	0.0072 *
NBP[1]1637*	0.0127 *	0.0013 *	0.3047 *	0.0066 *	0.0122 *	0.0053 *
NBP[1]1732*	0.0101 *	0.0010 *	0.2565 *	0.0056 *	0.0101 *	0.0044 *

* Specified by user.

Material Stream: PANDHI oil (continued)

Fluid Package: Basis-1
Property Package: Peng-Robinson

COMPOSITION

Overall Phase (continued)

Vapour Fraction ---

COMPONENTS	MOLAR FLOW (kgmole/h)	MOLE FRACTION	MASS FLOW (tonne/d)	MASS FRACTION	LIQUID VOLUME FLOW (m3/h)	LIQUID VOLUME FRACTION
NBP[1]1819*	0.0097 *	0.0010 *	0.2590 *	0.0056 *	0.0101 *	0.0044 *
NBP[1]1913*	0.0112 *	0.0011 *	0.3148 *	0.0069 *	0.0121 *	0.0053 *
Total	9.7460	1.0000	45.8513	1.0000	2.2926	1.0000

Material Stream: Pandhi-C

Fluid Package: Basis-1
Property Package: Peng-Robinson

CONDITIONS

	Overall	Vapour Phase	Liquid Phase	Aqueous Phase
Vapour / Phase Fraction	0.0000	0.0000	1.0000	0.0000
Temperature: (F)	84.79	84.79	84.79	84.79
Pressure: (psig)	445.0	445.0	445.0	445.0
Molar Flow (MMSCFD)	0.3574	0.0000	0.3574	0.0000
Mass Flow (tonne/d)	53.98	0.0000	53.98	0.0000
Std Ideal Liq Vol Flow (barrel/day)	449.3	0.0000	449.3	0.0000
Molar Enthalpy (kJ/kgmole)	-2.875e+005	-8.928e+004	-2.875e+005	-2.859e+005
Molar Entropy (kJ/kgmole-C)	218.7	159.3	218.7	54.83
Heat Flow (MMBtu/hr)	-4.850	0.0000	-4.850	0.0000
Liq Vol Flow @Std Cond (barrel/day)	434.3 *	0.0000	434.3	0.0000

PROPERTIES

	Overall	Vapour Phase	Liquid Phase	Aqueous Phase
Molecular Weight	126.4	21.39	126.4	18.03
Molar Density (kgmole/m3)	6.079	1.408	6.079	55.76
Mass Density (kg/m3)	768.1	30.10	768.1	1005
Act. Volume Flow (barrel/day)	442.0	0.0000	442.0	0.0000
Mass Enthalpy (kJ/kg)	-2275	-4175	-2275	-1.586e+004
Mass Entropy (kJ/kg-C)	1.731	7.448	1.731	3.042
Heat Capacity (kJ/kgmole-C)	253.8	47.13	253.8	77.64
Mass Heat Capacity (kJ/kg-C)	2.009	2.204	2.009	4.307
LHV Molar Basis (Std) (Btu/SCF)	---	---	---	1.809e-004
LHV Mass Basis (Std) (kJ/kg)	---	---	---	8.858e-003
Phase Fraction [Vol. Basis]	---	---	1.000	---
Phase Fraction [Mass Basis]	0.0000	0.0000	1.000	0.0000
Partial Pressure of CO2 (psig)	-14.70	---	---	---
Cost Based on Flow (Cost/s)	0.0000	0.0000	0.0000	0.0000
Act. Gas Flow (ACT_m3/h)	---	---	---	---
Avg. Liq. Density (kgmole/m3)	5.980	16.84	5.980	55.35
Specific Heat (kJ/kgmole-C)	253.8	47.13	253.8	77.64
Std. Gas Flow (STD_m3/h)	420.9	0.0000	420.9	0.0000
Std. Ideal Liq. Mass Density (kg/m3)	755.6	360.1	755.6	997.8
Act. Liq. Flow (barrel/day)	442.0	---	442.0	0.0000
Z Factor	---	0.8953	0.2073	2.260e-002
Watson K	11.99	17.28	11.99	8.497
User Property	---	---	---	---
Partial Pressure of H2S (psig)	-14.70	---	---	---
Cp/(Cp - R)	1.034	1.214	1.034	1.120
Cp/Cv	1.034	1.388	1.034	1.149
Heat of Vap. (kJ/kgmole)	2.556e+005	---	---	---
Kinematic Viscosity (cSt)	12.25	0.3993	12.25	0.8047
Liq. Mass Density (Std. Cond) (kg/m3)	781.8	0.9081	781.8	1015
Liq. Vol. Flow (Std. Cond) (barrel/day)	434.3	0.0000	434.3	0.0000
Liquid Fraction	1.000	0.0000	1.000	1.000
Molar Volume (m3/kgmole)	0.1645	0.7104	0.1645	1.793e-002

* Specified by user.

Material Stream: Pandhi-C (continued)

Fluid Package: Basis-1
Property Package: Peng-Robinson

PROPERTIES

	Overall	Vapour Phase	Liquid Phase	Aqueous Phase
Mass Heat of Vap. (kJ/kg)	2023	---	---	---
Phase Fraction [Molar Basis]	0.0000	0.0000	1.0000	0.0000
Surface Tension (dyne/cm)	15.96	---	15.96	71.32
Thermal Conductivity (W/m-K)	0.1006	3.302e-002	0.1006	0.6173
Viscosity (cP)	9.409	1.202e-002	9.409	0.8089
Cv (Semi-Ideal) (kJ/kgmole-C)	245.5	38.81	245.5	69.33
Mass Cv (Semi-Ideal) (kJ/kg-C)	1.943	1.815	1.943	3.846
Cv (kJ/kgmole-C)	245.5	33.96	245.5	67.56
Mass Cv (kJ/kg-C)	1.943	1.588	1.943	3.748
Cv (Ent. Method) (kJ/kgmole-C)	---	-3697	---	66.88
Mass Cv (Ent. Method) (kJ/kg-C)	---	-172.9	---	3.711
Cp/Cv (Ent. Method)	---	-1.275e-002	---	1.161
Reid VP at 37.8 C (psig)	97.87	---	97.87	---
True VP at 37.8 C (psig)	475.9	3607	475.9	17.11
Liq. Vol. Flow - Sum(Std. Cond) (barrel/day)	434.3	0.0000	434.3	0.0000
HHV Molar Basis (Std) (Btu/SCF)	---	---	---	46.45
HHV Mass Basis (Std) (kJ/kg)	---	---	---	2274
CO2 Loading	---	---	---	---
CO2 App ML Con (kgmole/m3)	8.172e-002	---	8.172e-002	---
CO2 App WT Con (kgmol/kg)	1.064e-004	---	1.064e-004	---
Phase Fraction [Act. Vol. Basis]	0.0000	0.0000	1.000	0.0000
Mass Exergy (kJ/kg)	19.83	---	---	---
Viscosity Index	24.69	---	---	---
Ideal Gas Cp/Cv	1.043	1.249	1.043	1.329
Ideal Gas Cp (kJ/kgmole-C)	200.0	41.72	200.0	33.60
Mass Ideal Gas Cp (kJ/kg-C)	1.583	1.951	1.583	1.864
Bubble Point Pressure (psig)	445.0	---	---	---

COMPOSITION

Overall Phase

Vapour Fraction 0.0000

COMPONENTS	MOLAR FLOW (kgmole/h)	MOLE FRACTION	MASS FLOW (tonne/d)	MASS FRACTION	LIQUID VOLUME FLOW (m3/h)	LIQUID VOLUME FRACTION
Methane	2.0221	0.1136	0.7786	0.0144	0.1084	0.0364
Ethane	1.1465	0.0644	0.8274	0.0153	0.0969	0.0326
Propane	1.6775	0.0942	1.7753	0.0329	0.1460	0.0490
i-Butane	0.4420	0.0248	0.6166	0.0114	0.0457	0.0154
n-Butane	1.0672	0.0600	1.4887	0.0276	0.1064	0.0357
i-Pentane	0.3860	0.0217	0.6684	0.0124	0.0447	0.0150
n-Pentane	0.4950	0.0278	0.8571	0.0159	0.0567	0.0191
n-Hexane	1.1004	0.0618	2.2760	0.0422	0.1431	0.0481
Nitrogen	0.0228	0.0013	0.0153	0.0003	0.0008	0.0003
CO2	0.2393	0.0134	0.2527	0.0047	0.0128	0.0043
H2S	0.0000	0.0000	0.0000	0.0000	0.0000	0.0000
H2O	0.0107	0.0006	0.0046	0.0001	0.0002	0.0001
NBP[1]95*	0.1457	0.0082	0.2376	0.0044	0.0146	0.0049
NBP[1]121*	0.2063	0.0116	0.3606	0.0067	0.0218	0.0073
NBP[1]147*	0.3061	0.0172	0.5891	0.0109	0.0350	0.0118
NBP[1]171*	0.6492	0.0365	1.3660	0.0253	0.0800	0.0269
NBP[1]195*	0.9179	0.0516	2.0614	0.0382	0.1193	0.0401
NBP[1]222*	0.7271	0.0408	1.7563	0.0325	0.1004	0.0337
NBP[1]248*	0.6282	0.0353	1.6313	0.0302	0.0921	0.0309
NBP[1]273*	0.5177	0.0291	1.4378	0.0266	0.0803	0.0270
NBP[1]299*	0.4103	0.0230	1.2148	0.0225	0.0671	0.0225
NBP[1]325*	0.2995	0.0168	0.9422	0.0175	0.0515	0.0173
NBP[1]351*	0.2442	0.0137	0.8165	0.0151	0.0442	0.0148
NBP[1]377*	0.2240	0.0126	0.7989	0.0148	0.0428	0.0144

* Specified by user.

Material Stream: Pandhi-C (continued)

Fluid Package: Basis-1
Property Package: Peng-Robinson

COMPOSITION

Overall Phase (continued)

Vapour Fraction 0.0000

COMPONENTS	MOLAR FLOW (kgmole/h)	MOLE FRACTION	MASS FLOW (tonne/d)	MASS FRACTION	LIQUID VOLUME FLOW (m3/h)	LIQUID VOLUME FRACTION
NBP[1]402*	0.2058	0.0116	0.7826	0.0145	0.0415	0.0139
NBP[1]428*	0.1959	0.0110	0.7949	0.0147	0.0417	0.0140
NBP[1]454*	0.1955	0.0110	0.8477	0.0157	0.0441	0.0148
NBP[1]480*	0.1981	0.0111	0.9180	0.0170	0.0473	0.0159
NBP[1]505*	0.1920	0.0108	0.9483	0.0176	0.0484	0.0162
NBP[1]531*	0.1852	0.0104	0.9740	0.0180	0.0492	0.0165
NBP[1]557*	0.1784	0.0100	0.9978	0.0185	0.0500	0.0168
NBP[1]582*	0.1706	0.0096	1.0132	0.0188	0.0503	0.0169
NBP[1]608*	0.1643	0.0092	1.0351	0.0192	0.0510	0.0171
NBP[1]634*	0.1611	0.0090	1.0753	0.0199	0.0526	0.0177
NBP[1]659*	0.1586	0.0089	1.1194	0.0207	0.0543	0.0182
NBP[1]685*	0.1641	0.0092	1.2227	0.0227	0.0588	0.0198
NBP[1]711*	0.1715	0.0096	1.3445	0.0249	0.0642	0.0216
NBP[1]736*	0.1697	0.0095	1.3915	0.0258	0.0659	0.0221
NBP[1]762*	0.1653	0.0093	1.4214	0.0263	0.0669	0.0225
NBP[1]788*	0.1585	0.0089	1.4424	0.0267	0.0674	0.0226
NBP[1]825*	0.2655	0.0149	2.5963	0.0481	0.1201	0.0404
NBP[1]873*	0.1830	0.0103	1.9404	0.0359	0.0887	0.0298
NBP[1]926*	0.1437	0.0081	1.6472	0.0305	0.0744	0.0250
NBP[1]978*	0.1474	0.0083	1.8524	0.0343	0.0825	0.0277
NBP[1]1021*	0.0728	0.0041	0.9655	0.0179	0.0426	0.0143
NBP[1]1075*	0.0449	0.0025	0.6310	0.0117	0.0276	0.0093
NBP[1]1123*	0.0417	0.0023	0.6267	0.0116	0.0271	0.0091
NBP[1]1173*	0.0300	0.0017	0.4772	0.0088	0.0205	0.0069
NBP[1]1250*	0.0393	0.0022	0.6767	0.0125	0.0287	0.0096
NBP[1]1339*	0.0364	0.0020	0.6999	0.0130	0.0291	0.0098
NBP[1]1432*	0.0257	0.0014	0.5397	0.0100	0.0221	0.0074
NBP[1]1528*	0.0180	0.0010	0.4082	0.0076	0.0165	0.0055
NBP[1]1637*	0.0127	0.0007	0.3047	0.0056	0.0122	0.0041
NBP[1]1732*	0.0101	0.0006	0.2565	0.0048	0.0101	0.0034
NBP[1]1819*	0.0096	0.0005	0.2561	0.0047	0.0100	0.0034
NBP[1]1913*	0.0000	0.0000	0.0000	0.0000	0.0000	0.0000
Total	17.8012	1.0000	53.9808	1.0000	2.9766	1.0000

Vapour Phase

Phase Fraction 0.0000

COMPONENTS	MOLAR FLOW (kgmole/h)	MOLE FRACTION	MASS FLOW (tonne/d)	MASS FRACTION	LIQUID VOLUME FLOW (m3/h)	LIQUID VOLUME FRACTION
Methane	0.0000	0.7649	0.0000	0.5738	0.0000	0.6901
Ethane	0.0000	0.1032	0.0000	0.1451	0.0000	0.1469
Propane	0.0000	0.0507	0.0000	0.1046	0.0000	0.0743
i-Butane	0.0000	0.0059	0.0000	0.0161	0.0000	0.0103
n-Butane	0.0000	0.0108	0.0000	0.0292	0.0000	0.0181
i-Pentane	0.0000	0.0017	0.0000	0.0058	0.0000	0.0034
n-Pentane	0.0000	0.0017	0.0000	0.0059	0.0000	0.0033
n-Hexane	0.0000	0.0014	0.0000	0.0056	0.0000	0.0030
Nitrogen	0.0000	0.0208	0.0000	0.0272	0.0000	0.0122
CO2	0.0000	0.0341	0.0000	0.0701	0.0000	0.0306
H2S	0.0000	0.0000	0.0000	0.0000	0.0000	0.0000
H2O	0.0000	0.0015	0.0000	0.0012	0.0000	0.0004
NBP[1]95*	0.0000	0.0005	0.0000	0.0017	0.0000	0.0009
NBP[1]121*	0.0000	0.0005	0.0000	0.0017	0.0000	0.0009
NBP[1]147*	0.0000	0.0005	0.0000	0.0018	0.0000	0.0009
NBP[1]171*	0.0000	0.0006	0.0000	0.0027	0.0000	0.0013
NBP[1]195*	0.0000	0.0006	0.0000	0.0026	0.0000	0.0013

* Specified by user.

Material Stream: Pandhi-C (continued)

Fluid Package: Basis-1
Property Package: Peng-Robinson

COMPOSITION

Vapour Phase (continued)

Phase Fraction 0.0000

COMPONENTS	MOLAR FLOW (kgmole/h)	MOLE FRACTION	MASS FLOW (tonne/d)	MASS FRACTION	LIQUID VOLUME FLOW (m3/h)	LIQUID VOLUME FRACTION
NBP[1]222*	0.0000	0.0003	0.0000	0.0013	0.0000	0.0006
NBP[1]248*	0.0000	0.0001	0.0000	0.0007	0.0000	0.0003
NBP[1]273*	0.0000	0.0001	0.0000	0.0004	0.0000	0.0002
NBP[1]299*	0.0000	0.0000	0.0000	0.0002	0.0000	0.0001
NBP[1]325*	0.0000	0.0000	0.0000	0.0001	0.0000	0.0000
NBP[1]351*	0.0000	0.0000	0.0000	0.0000	0.0000	0.0000
NBP[1]377*	0.0000	0.0000	0.0000	0.0000	0.0000	0.0000
NBP[1]402*	0.0000	0.0000	0.0000	0.0000	0.0000	0.0000
NBP[1]428*	0.0000	0.0000	0.0000	0.0000	0.0000	0.0000
NBP[1]454*	0.0000	0.0000	0.0000	0.0000	0.0000	0.0000
NBP[1]480*	0.0000	0.0000	0.0000	0.0000	0.0000	0.0000
NBP[1]505*	0.0000	0.0000	0.0000	0.0000	0.0000	0.0000
NBP[1]531*	0.0000	0.0000	0.0000	0.0000	0.0000	0.0000
NBP[1]557*	0.0000	0.0000	0.0000	0.0000	0.0000	0.0000
NBP[1]582*	0.0000	0.0000	0.0000	0.0000	0.0000	0.0000
NBP[1]608*	0.0000	0.0000	0.0000	0.0000	0.0000	0.0000
NBP[1]634*	0.0000	0.0000	0.0000	0.0000	0.0000	0.0000
NBP[1]659*	0.0000	0.0000	0.0000	0.0000	0.0000	0.0000
NBP[1]685*	0.0000	0.0000	0.0000	0.0000	0.0000	0.0000
NBP[1]711*	0.0000	0.0000	0.0000	0.0000	0.0000	0.0000
NBP[1]736*	0.0000	0.0000	0.0000	0.0000	0.0000	0.0000
NBP[1]762*	0.0000	0.0000	0.0000	0.0000	0.0000	0.0000
NBP[1]788*	0.0000	0.0000	0.0000	0.0000	0.0000	0.0000
NBP[1]825*	0.0000	0.0000	0.0000	0.0000	0.0000	0.0000
NBP[1]873*	0.0000	0.0000	0.0000	0.0000	0.0000	0.0000
NBP[1]926*	0.0000	0.0000	0.0000	0.0000	0.0000	0.0000
NBP[1]978*	0.0000	0.0000	0.0000	0.0000	0.0000	0.0000
NBP[1]1021*	0.0000	0.0000	0.0000	0.0000	0.0000	0.0000
NBP[1]1075*	0.0000	0.0000	0.0000	0.0000	0.0000	0.0000
NBP[1]1123*	0.0000	0.0000	0.0000	0.0000	0.0000	0.0000
NBP[1]1173*	0.0000	0.0000	0.0000	0.0000	0.0000	0.0000
NBP[1]1250*	0.0000	0.0000	0.0000	0.0000	0.0000	0.0000
NBP[1]1339*	0.0000	0.0000	0.0000	0.0000	0.0000	0.0000
NBP[1]1432*	0.0000	0.0000	0.0000	0.0000	0.0000	0.0000
NBP[1]1528*	0.0000	0.0000	0.0000	0.0000	0.0000	0.0000
NBP[1]1637*	0.0000	0.0000	0.0000	0.0000	0.0000	0.0000
NBP[1]1732*	0.0000	0.0000	0.0000	0.0000	0.0000	0.0000
NBP[1]1819*	0.0000	0.0000	0.0000	0.0000	0.0000	0.0000
NBP[1]1913*	0.0000	0.0000	0.0000	0.0023	0.0000	0.0008
Total	0.0000	1.0000	0.0000	1.0000	0.0000	1.0000

Liquid Phase

Phase Fraction 1.000

COMPONENTS	MOLAR FLOW (kgmole/h)	MOLE FRACTION	MASS FLOW (tonne/d)	MASS FRACTION	LIQUID VOLUME FLOW (m3/h)	LIQUID VOLUME FRACTION
Methane	2.0221	0.1136	0.7786	0.0144	0.1084	0.0364
Ethane	1.1465	0.0644	0.8274	0.0153	0.0969	0.0326
Propane	1.6775	0.0942	1.7753	0.0329	0.1460	0.0490
i-Butane	0.4420	0.0248	0.6166	0.0114	0.0457	0.0154
n-Butane	1.0672	0.0600	1.4887	0.0276	0.1064	0.0357
i-Pentane	0.3860	0.0217	0.6684	0.0124	0.0447	0.0150
n-Pentane	0.4950	0.0278	0.8571	0.0159	0.0567	0.0191
n-Hexane	1.1004	0.0618	2.2760	0.0422	0.1431	0.0481
Nitrogen	0.0228	0.0013	0.0153	0.0003	0.0008	0.0003
CO2	0.2393	0.0134	0.2527	0.0047	0.0128	0.0043

* Specified by user.

Material Stream: Pandhi-C (continued)

Fluid Package: Basis-1
Property Package: Peng-Robinson

COMPOSITION

Liquid Phase (continued)

Phase Fraction 1.000

COMPONENTS	MOLAR FLOW (kgmole/h)	MOLE FRACTION	MASS FLOW (tonne/d)	MASS FRACTION	LIQUID VOLUME FLOW (m3/h)	LIQUID VOLUME FRACTION
H2S	0.0000	0.0000	0.0000	0.0000	0.0000	0.0000
H2O	0.0107	0.0006	0.0046	0.0001	0.0002	0.0001
NBP[1]95*	0.1457	0.0082	0.2376	0.0044	0.0146	0.0049
NBP[1]121*	0.2063	0.0116	0.3606	0.0067	0.0218	0.0073
NBP[1]147*	0.3061	0.0172	0.5891	0.0109	0.0350	0.0118
NBP[1]171*	0.6492	0.0365	1.3660	0.0253	0.0800	0.0269
NBP[1]195*	0.9179	0.0516	2.0614	0.0382	0.1193	0.0401
NBP[1]222*	0.7271	0.0408	1.7563	0.0325	0.1004	0.0337
NBP[1]248*	0.6282	0.0353	1.6313	0.0302	0.0921	0.0309
NBP[1]273*	0.5177	0.0291	1.4378	0.0266	0.0803	0.0270
NBP[1]299*	0.4103	0.0230	1.2148	0.0225	0.0671	0.0225
NBP[1]325*	0.2995	0.0168	0.9422	0.0175	0.0515	0.0173
NBP[1]351*	0.2442	0.0137	0.8165	0.0151	0.0442	0.0148
NBP[1]377*	0.2240	0.0126	0.7989	0.0148	0.0428	0.0144
NBP[1]402*	0.2058	0.0116	0.7826	0.0145	0.0415	0.0139
NBP[1]428*	0.1959	0.0110	0.7949	0.0147	0.0417	0.0140
NBP[1]454*	0.1955	0.0110	0.8477	0.0157	0.0441	0.0148
NBP[1]480*	0.1981	0.0111	0.9180	0.0170	0.0473	0.0159
NBP[1]505*	0.1920	0.0108	0.9483	0.0176	0.0484	0.0162
NBP[1]531*	0.1852	0.0104	0.9740	0.0180	0.0492	0.0165
NBP[1]557*	0.1784	0.0100	0.9978	0.0185	0.0500	0.0168
NBP[1]582*	0.1706	0.0096	1.0132	0.0188	0.0503	0.0169
NBP[1]608*	0.1643	0.0092	1.0351	0.0192	0.0510	0.0171
NBP[1]634*	0.1611	0.0090	1.0753	0.0199	0.0526	0.0177
NBP[1]659*	0.1586	0.0089	1.1194	0.0207	0.0543	0.0182
NBP[1]685*	0.1641	0.0092	1.2227	0.0227	0.0588	0.0198
NBP[1]711*	0.1715	0.0096	1.3445	0.0249	0.0642	0.0216
NBP[1]736*	0.1697	0.0095	1.3915	0.0258	0.0659	0.0221
NBP[1]762*	0.1653	0.0093	1.4214	0.0263	0.0669	0.0225
NBP[1]788*	0.1585	0.0089	1.4424	0.0267	0.0674	0.0226
NBP[1]825*	0.2655	0.0149	2.5963	0.0481	0.1201	0.0404
NBP[1]873*	0.1830	0.0103	1.9404	0.0359	0.0887	0.0298
NBP[1]926*	0.1437	0.0081	1.6472	0.0305	0.0744	0.0250
NBP[1]978*	0.1474	0.0083	1.8524	0.0343	0.0825	0.0277
NBP[1]1021*	0.0728	0.0041	0.9655	0.0179	0.0426	0.0143
NBP[1]1075*	0.0449	0.0025	0.6310	0.0117	0.0276	0.0093
NBP[1]1123*	0.0417	0.0023	0.6267	0.0116	0.0271	0.0091
NBP[1]1173*	0.0300	0.0017	0.4772	0.0088	0.0205	0.0069
NBP[1]1250*	0.0393	0.0022	0.6767	0.0125	0.0287	0.0096
NBP[1]1339*	0.0364	0.0020	0.6999	0.0130	0.0291	0.0098
NBP[1]1432*	0.0257	0.0014	0.5397	0.0100	0.0221	0.0074
NBP[1]1528*	0.0180	0.0010	0.4082	0.0076	0.0165	0.0055
NBP[1]1637*	0.0127	0.0007	0.3047	0.0056	0.0122	0.0041
NBP[1]1732*	0.0101	0.0006	0.2565	0.0048	0.0101	0.0034
NBP[1]1819*	0.0096	0.0005	0.2561	0.0047	0.0100	0.0034
NBP[1]1913*	0.0000	0.0000	0.0000	0.0000	0.0000	0.0000
Total	17.8012	1.0000	53.9808	1.0000	2.9766	1.0000

Aqueous Phase

Phase Fraction 0.0000

COMPONENTS	MOLAR FLOW (kgmole/h)	MOLE FRACTION	MASS FLOW (tonne/d)	MASS FRACTION	LIQUID VOLUME FLOW (m3/h)	LIQUID VOLUME FRACTION
Methane	0.0000	0.0000	0.0000	0.0000	0.0000	0.0000
Ethane	0.0000	0.0000	0.0000	0.0000	0.0000	0.0000
Propane	0.0000	0.0000	0.0000	0.0000	0.0000	0.0000

* Specified by user.

Material Stream: Pandhi-C (continued)

Fluid Package: Basis-1
Property Package: Peng-Robinson

COMPOSITION

Aqueous Phase (continued)

Phase Fraction 0.0000

COMPONENTS	MOLAR FLOW (kgmole/h)	MOLE FRACTION	MASS FLOW (tonne/d)	MASS FRACTION	LIQUID VOLUME FLOW (m3/h)	LIQUID VOLUME FRACTION
i-Butane	0.0000	0.0000	0.0000	0.0000	0.0000	0.0000
n-Butane	0.0000	0.0000	0.0000	0.0000	0.0000	0.0000
i-Pentane	0.0000	0.0000	0.0000	0.0000	0.0000	0.0000
n-Pentane	0.0000	0.0000	0.0000	0.0000	0.0000	0.0000
n-Hexane	0.0000	0.0000	0.0000	0.0000	0.0000	0.0000
Nitrogen	0.0000	0.0000	0.0000	0.0000	0.0000	0.0000
CO2	0.0000	0.0004	0.0000	0.0010	0.0000	0.0012
H2S	0.0000	0.0000	0.0000	0.0000	0.0000	0.0000
H2O	0.0000	0.9996	0.0000	0.9990	0.0000	0.9988
NBP[1]95*	0.0000	0.0000	0.0000	0.0000	0.0000	0.0000
NBP[1]121*	0.0000	0.0000	0.0000	0.0000	0.0000	0.0000
NBP[1]147*	0.0000	0.0000	0.0000	0.0000	0.0000	0.0000
NBP[1]171*	0.0000	0.0000	0.0000	0.0000	0.0000	0.0000
NBP[1]195*	0.0000	0.0000	0.0000	0.0000	0.0000	0.0000
NBP[1]222*	0.0000	0.0000	0.0000	0.0000	0.0000	0.0000
NBP[1]248*	0.0000	0.0000	0.0000	0.0000	0.0000	0.0000
NBP[1]273*	0.0000	0.0000	0.0000	0.0000	0.0000	0.0000
NBP[1]299*	0.0000	0.0000	0.0000	0.0000	0.0000	0.0000
NBP[1]325*	0.0000	0.0000	0.0000	0.0000	0.0000	0.0000
NBP[1]351*	0.0000	0.0000	0.0000	0.0000	0.0000	0.0000
NBP[1]377*	0.0000	0.0000	0.0000	0.0000	0.0000	0.0000
NBP[1]402*	0.0000	0.0000	0.0000	0.0000	0.0000	0.0000
NBP[1]428*	0.0000	0.0000	0.0000	0.0000	0.0000	0.0000
NBP[1]454*	0.0000	0.0000	0.0000	0.0000	0.0000	0.0000
NBP[1]480*	0.0000	0.0000	0.0000	0.0000	0.0000	0.0000
NBP[1]505*	0.0000	0.0000	0.0000	0.0000	0.0000	0.0000
NBP[1]531*	0.0000	0.0000	0.0000	0.0000	0.0000	0.0000
NBP[1]557*	0.0000	0.0000	0.0000	0.0000	0.0000	0.0000
NBP[1]582*	0.0000	0.0000	0.0000	0.0000	0.0000	0.0000
NBP[1]608*	0.0000	0.0000	0.0000	0.0000	0.0000	0.0000
NBP[1]634*	0.0000	0.0000	0.0000	0.0000	0.0000	0.0000
NBP[1]659*	0.0000	0.0000	0.0000	0.0000	0.0000	0.0000
NBP[1]685*	0.0000	0.0000	0.0000	0.0000	0.0000	0.0000
NBP[1]711*	0.0000	0.0000	0.0000	0.0000	0.0000	0.0000
NBP[1]736*	0.0000	0.0000	0.0000	0.0000	0.0000	0.0000
NBP[1]762*	0.0000	0.0000	0.0000	0.0000	0.0000	0.0000
NBP[1]788*	0.0000	0.0000	0.0000	0.0000	0.0000	0.0000
NBP[1]825*	0.0000	0.0000	0.0000	0.0000	0.0000	0.0000
NBP[1]873*	0.0000	0.0000	0.0000	0.0000	0.0000	0.0000
NBP[1]926*	0.0000	0.0000	0.0000	0.0000	0.0000	0.0000
NBP[1]978*	0.0000	0.0000	0.0000	0.0000	0.0000	0.0000
NBP[1]1021*	0.0000	0.0000	0.0000	0.0000	0.0000	0.0000
NBP[1]1075*	0.0000	0.0000	0.0000	0.0000	0.0000	0.0000
NBP[1]1123*	0.0000	0.0000	0.0000	0.0000	0.0000	0.0000
NBP[1]1173*	0.0000	0.0000	0.0000	0.0000	0.0000	0.0000
NBP[1]1250*	0.0000	0.0000	0.0000	0.0000	0.0000	0.0000
NBP[1]1339*	0.0000	0.0000	0.0000	0.0000	0.0000	0.0000
NBP[1]1432*	0.0000	0.0000	0.0000	0.0000	0.0000	0.0000
NBP[1]1528*	0.0000	0.0000	0.0000	0.0000	0.0000	0.0000
NBP[1]1637*	0.0000	0.0000	0.0000	0.0000	0.0000	0.0000
NBP[1]1732*	0.0000	0.0000	0.0000	0.0000	0.0000	0.0000
NBP[1]1819*	0.0000	0.0000	0.0000	0.0000	0.0000	0.0000
NBP[1]1913*	0.0000	0.0000	0.0000	0.0000	0.0000	0.0000
Total	0.0000	1.0000	0.0000	1.0000	0.0000	1.0000

* Specified by user.

Material Stream: Pandhi-Cond.

Fluid Package: Basis-1
Property Package: Peng-Robinson

CONDITIONS

	Overall	Vapour Phase	Liquid Phase	Aqueous Phase
Vapour / Phase Fraction	0.0000	0.0000	1.0000	0.0000
Temperature: (F)	179.9	179.9	179.9	179.9
Pressure: (psig)	1235	1235	1235	1235
Molar Flow (MMSCFD)	0.2793	0.0000	0.2793	0.0000
Mass Flow (tonne/d)	44.97	0.0000	44.97	0.0000
Std Ideal Liq Vol Flow (barrel/day)	367.9	0.0000	367.9	0.0000
Molar Enthalpy (kJ/kgmole)	-2.936e+005	-9.019e+004	-2.936e+005	-2.817e+005
Molar Entropy (kJ/kgmole-C)	297.9	156.9	297.9	67.27
Heat Flow (MMBtu/hr)	-3.872	0.0000	-3.872	0.0000
Liq Vol Flow @Std Cond (barrel/day)	353.5 *	0.0000	353.5	0.0000

PROPERTIES

	Overall	Vapour Phase	Liquid Phase	Aqueous Phase
Molecular Weight	134.7	22.43	134.7	18.03
Molar Density (kgmole/m3)	5.463	3.442	5.463	53.60
Mass Density (kg/m3)	735.6	77.20	735.6	966.2
Act. Volume Flow (barrel/day)	384.5	0.0000	384.5	0.0000
Mass Enthalpy (kJ/kg)	-2181	-4020	-2181	-1.563e+004
Mass Entropy (kJ/kg-C)	2.212	6.994	2.212	3.732
Heat Capacity (kJ/kgmole-C)	299.7	58.39	299.7	78.26
Mass Heat Capacity (kJ/kg-C)	2.226	2.603	2.226	4.342
LHV Molar Basis (Std) (Btu/SCF)	---	---	---	5.036e-003
LHV Mass Basis (Std) (kJ/kg)	---	---	---	0.2466
Phase Fraction [Vol. Basis]	---	---	1.000	---
Phase Fraction [Mass Basis]	0.0000	0.0000	1.000	0.0000
Partial Pressure of CO2 (psig)	-14.70	---	---	---
Cost Based on Flow (Cost/s)	0.0000	0.0000	0.0000	0.0000
Act. Gas Flow (ACT_m3/h)	---	---	---	---
Avg. Liq. Density (kgmole/m3)	5.708	16.60	5.708	55.35
Specific Heat (kJ/kgmole-C)	299.7	58.39	299.7	78.26
Std. Gas Flow (STD_m3/h)	329.0	0.0000	329.0	0.0000
Std. Ideal Liq. Mass Density (kg/m3)	768.7	372.3	768.7	997.8
Act. Liq. Flow (barrel/day)	384.5	---	384.5	0.0000
Z Factor	---	0.8474	0.5339	5.441e-002
Watson K	11.89	16.94	11.89	8.528
User Property	---	---	---	---
Partial Pressure of H2S (psig)	-14.70	---	---	---
Cp/(Cp - R)	1.029	1.166	1.029	1.119
Cp/Cv	1.221	1.465	1.221	1.166
Heat of Vap. (kJ/kgmole)	1.811e+005	---	---	---
Kinematic Viscosity (cSt)	0.9907	0.2016	0.9907	0.3537
Liq. Mass Density (Std. Cond) (kg/m3)	800.0	0.9529	800.0	1015
Liq. Vol. Flow (Std. Cond) (barrel/day)	353.5	0.0000	353.5	0.0000
Liquid Fraction	1.000	0.0000	1.000	1.000
Molar Volume (m3/kgmole)	0.1831	0.2906	0.1831	1.866e-002
Mass Heat of Vap. (kJ/kg)	1344	---	---	---
Phase Fraction [Molar Basis]	0.0000	0.0000	1.0000	0.0000
Surface Tension (dyne/cm)	12.00	---	12.00	61.91
Thermal Conductivity (W/m-K)	9.065e-002	4.456e-002	9.065e-002	0.6712
Viscosity (cP)	0.7288	1.556e-002	0.7288	0.3417
Cv (Semi-Ideal) (kJ/kgmole-C)	291.4	50.08	291.4	69.95
Mass Cv (Semi-Ideal) (kJ/kg-C)	2.164	2.232	2.164	3.880
Cv (kJ/kgmole-C)	245.4	39.85	245.4	67.10
Mass Cv (kJ/kg-C)	1.823	1.777	1.823	3.722
Cv (Ent. Method) (kJ/kgmole-C)	259.5	---	259.5	64.64
Mass Cv (Ent. Method) (kJ/kg-C)	1.927	---	1.927	3.586
Cp/Cv (Ent. Method)	1.155	---	1.155	1.211

* Specified by user.

Material Stream: Pandhi-Cond. (continued)

Fluid Package: Basis-1
Property Package: Peng-Robinson

PROPERTIES

	Overall	Vapour Phase	Liquid Phase	Aqueous Phase
Reid VP at 37.8 C (psig)	151.1	---	151.1	---
True VP at 37.8 C (psig)	970.9	---	970.9	---
Liq. Vol. Flow - Sum(Std. Cond) (barrel/day)	353.5	0.0000	353.5	0.0000
HHV Molar Basis (Std) (Btu/SCF)	---	---	---	46.45
HHV Mass Basis (Std) (kJ/kg)	---	---	---	2274
CO2 Loading	---	---	---	---
CO2 App ML Con (kgmole/m3)	9.777e-002	---	9.777e-002	---
CO2 App WT Con (kgmol/kg)	1.329e-004	---	1.329e-004	---
Phase Fraction [Act. Vol. Basis]	0.0000	0.0000	1.000	0.0000
Mass Exergy (kJ/kg)	45.64	---	---	---
Viscosity Index	3.121	---	---	---
Ideal Gas Cp/Cv	1.035	1.215	1.035	1.324
Ideal Gas Cp (kJ/kgmole-C)	244.8	46.90	244.8	33.95
Mass Ideal Gas Cp (kJ/kg-C)	1.818	2.091	1.818	1.884
Bubble Point Pressure (psig)	1235	---	---	---

COMPOSITION

Overall Phase

Vapour Fraction 0.0000

COMPONENTS	MOLAR FLOW (kgmole/h)	MOLE FRACTION	MASS FLOW (tonne/d)	MASS FRACTION	LIQUID VOLUME FLOW (m3/h)	LIQUID VOLUME FRACTION
Methane	2.9680	0.2133	1.1428	0.0254	0.1590	0.0653
Ethane	0.9898	0.0711	0.7143	0.0159	0.0837	0.0343
Propane	0.9969	0.0717	1.0551	0.0235	0.0868	0.0356
i-Butane	0.2099	0.0151	0.2929	0.0065	0.0217	0.0089
n-Butane	0.4797	0.0345	0.6692	0.0149	0.0478	0.0196
i-Pentane	0.1582	0.0114	0.2739	0.0061	0.0183	0.0075
n-Pentane	0.2009	0.0144	0.3479	0.0077	0.0230	0.0094
n-Hexane	0.4893	0.0352	1.0120	0.0225	0.0636	0.0261
Nitrogen	0.0456	0.0033	0.0307	0.0007	0.0016	0.0007
CO2	0.2490	0.0179	0.2630	0.0058	0.0133	0.0054
H2S	0.0000	0.0000	0.0000	0.0000	0.0000	0.0000
H2O	0.0638	0.0046	0.0276	0.0006	0.0012	0.0005
NBP[1]95*	0.0609	0.0044	0.0994	0.0022	0.0061	0.0025
NBP[1]121*	0.0868	0.0062	0.1518	0.0034	0.0092	0.0038
NBP[1]147*	0.1345	0.0097	0.2589	0.0058	0.0154	0.0063
NBP[1]171*	0.3052	0.0219	0.6423	0.0143	0.0376	0.0154
NBP[1]195*	0.4692	0.0337	1.0536	0.0234	0.0610	0.0250
NBP[1]222*	0.4143	0.0298	1.0008	0.0223	0.0572	0.0235
NBP[1]248*	0.3971	0.0285	1.0312	0.0229	0.0582	0.0239
NBP[1]273*	0.3602	0.0259	1.0003	0.0222	0.0558	0.0229
NBP[1]299*	0.3105	0.0223	0.9193	0.0204	0.0508	0.0208
NBP[1]325*	0.2436	0.0175	0.7664	0.0170	0.0419	0.0172
NBP[1]351*	0.2104	0.0151	0.7035	0.0156	0.0381	0.0156
NBP[1]377*	0.2019	0.0145	0.7201	0.0160	0.0386	0.0158
NBP[1]402*	0.1916	0.0138	0.7287	0.0162	0.0387	0.0159
NBP[1]428*	0.1868	0.0134	0.7579	0.0169	0.0398	0.0163
NBP[1]454*	0.1895	0.0136	0.8215	0.0183	0.0427	0.0175
NBP[1]480*	0.1942	0.0140	0.8996	0.0200	0.0463	0.0190
NBP[1]505*	0.1895	0.0136	0.9362	0.0208	0.0478	0.0196
NBP[1]531*	0.1837	0.0132	0.9662	0.0215	0.0488	0.0200
NBP[1]557*	0.1775	0.0128	0.9930	0.0221	0.0498	0.0204
NBP[1]582*	0.1701	0.0122	1.0102	0.0225	0.0502	0.0206
NBP[1]608*	0.1640	0.0118	1.0333	0.0230	0.0509	0.0209
NBP[1]634*	0.1609	0.0116	1.0743	0.0239	0.0525	0.0215
NBP[1]659*	0.1585	0.0114	1.1188	0.0249	0.0542	0.0223
NBP[1]685*	0.1641	0.0118	1.2224	0.0272	0.0588	0.0241

* Specified by user.

Material Stream: Pandhi-Cond. (continued)

Fluid Package: Basis-1
Property Package: Peng-Robinson

COMPOSITION

Overall Phase (continued)

Vapour Fraction 0.0000

COMPONENTS	MOLAR FLOW (kgmole/h)	MOLE FRACTION	MASS FLOW (tonne/d)	MASS FRACTION	LIQUID VOLUME FLOW (m3/h)	LIQUID VOLUME FRACTION
NBP[1]711*	0.1715	0.0123	1.3442	0.0299	0.0642	0.0263
NBP[1]736*	0.1697	0.0122	1.3914	0.0309	0.0659	0.0270
NBP[1]762*	0.1653	0.0119	1.4214	0.0316	0.0669	0.0274
NBP[1]788*	0.1585	0.0114	1.4423	0.0321	0.0674	0.0276
NBP[1]825*	0.2655	0.0191	2.5963	0.0577	0.1201	0.0493
NBP[1]873*	0.1830	0.0132	1.9404	0.0432	0.0887	0.0364
NBP[1]926*	0.1437	0.0103	1.6472	0.0366	0.0744	0.0305
NBP[1]978*	0.1474	0.0106	1.8524	0.0412	0.0825	0.0338
NBP[1]1021*	0.0728	0.0052	0.9655	0.0215	0.0426	0.0175
NBP[1]1075*	0.0449	0.0032	0.6310	0.0140	0.0276	0.0113
NBP[1]1123*	0.0417	0.0030	0.6267	0.0139	0.0271	0.0111
NBP[1]1173*	0.0300	0.0022	0.4772	0.0106	0.0205	0.0084
NBP[1]1250*	0.0393	0.0028	0.6767	0.0150	0.0287	0.0118
NBP[1]1339*	0.0364	0.0026	0.6999	0.0156	0.0291	0.0120
NBP[1]1432*	0.0257	0.0018	0.5397	0.0120	0.0221	0.0091
NBP[1]1528*	0.0180	0.0013	0.4082	0.0091	0.0165	0.0068
NBP[1]1637*	0.0127	0.0009	0.3047	0.0068	0.0122	0.0050
NBP[1]1732*	0.0101	0.0007	0.2564	0.0057	0.0101	0.0042
NBP[1]1819*	0.0002	0.0000	0.0045	0.0001	0.0002	0.0001
NBP[1]1913*	0.0000	0.0000	0.0000	0.0000	0.0000	0.0000
Total	13.9126	1.0000	44.9650	1.0000	2.4372	1.0000

Vapour Phase

Phase Fraction 0.0000

COMPONENTS	MOLAR FLOW (kgmole/h)	MOLE FRACTION	MASS FLOW (tonne/d)	MASS FRACTION	LIQUID VOLUME FLOW (m3/h)	LIQUID VOLUME FRACTION
Methane	0.0000	0.7455	0.0000	0.5332	0.0000	0.6631
Ethane	0.0000	0.1016	0.0000	0.1362	0.0000	0.1426
Propane	0.0000	0.0521	0.0000	0.1025	0.0000	0.0753
i-Butane	0.0000	0.0066	0.0000	0.0172	0.0000	0.0114
n-Butane	0.0000	0.0127	0.0000	0.0329	0.0000	0.0210
i-Pentane	0.0000	0.0025	0.0000	0.0081	0.0000	0.0049
n-Pentane	0.0000	0.0028	0.0000	0.0089	0.0000	0.0053
n-Hexane	0.0000	0.0036	0.0000	0.0138	0.0000	0.0077
Nitrogen	0.0000	0.0203	0.0000	0.0253	0.0000	0.0117
CO2	0.0000	0.0333	0.0000	0.0654	0.0000	0.0295
H2S	0.0000	0.0000	0.0000	0.0000	0.0000	0.0000
H2O	0.0000	0.0079	0.0000	0.0063	0.0000	0.0024
NBP[1]95*	0.0000	0.0008	0.0000	0.0025	0.0000	0.0014
NBP[1]121*	0.0000	0.0009	0.0000	0.0030	0.0000	0.0016
NBP[1]147*	0.0000	0.0011	0.0000	0.0039	0.0000	0.0021
NBP[1]171*	0.0000	0.0019	0.0000	0.0074	0.0000	0.0039
NBP[1]195*	0.0000	0.0022	0.0000	0.0092	0.0000	0.0048
NBP[1]222*	0.0000	0.0014	0.0000	0.0063	0.0000	0.0032
NBP[1]248*	0.0000	0.0010	0.0000	0.0047	0.0000	0.0024
NBP[1]273*	0.0000	0.0006	0.0000	0.0033	0.0000	0.0017
NBP[1]299*	0.0000	0.0004	0.0000	0.0022	0.0000	0.0011
NBP[1]325*	0.0000	0.0002	0.0000	0.0013	0.0000	0.0006
NBP[1]351*	0.0000	0.0001	0.0000	0.0008	0.0000	0.0004
NBP[1]377*	0.0000	0.0001	0.0000	0.0006	0.0000	0.0003
NBP[1]402*	0.0000	0.0001	0.0000	0.0004	0.0000	0.0002
NBP[1]428*	0.0000	0.0000	0.0000	0.0003	0.0000	0.0001
NBP[1]454*	0.0000	0.0000	0.0000	0.0002	0.0000	0.0001
NBP[1]480*	0.0000	0.0000	0.0000	0.0001	0.0000	0.0001
NBP[1]505*	0.0000	0.0000	0.0000	0.0001	0.0000	0.0000

* Specified by user.

Material Stream: Pandhi-Cond. (continued)

Fluid Package: Basis-1
Property Package: Peng-Robinson

COMPOSITION

Vapour Phase (continued)

Phase Fraction 0.0000

COMPONENTS	MOLAR FLOW (kgmole/h)	MOLE FRACTION	MASS FLOW (tonne/d)	MASS FRACTION	LIQUID VOLUME FLOW (m3/h)	LIQUID VOLUME FRACTION
NBP[1]531*	0.0000	0.0000	0.0000	0.0001	0.0000	0.0000
NBP[1]557*	0.0000	0.0000	0.0000	0.0000	0.0000	0.0000
NBP[1]582*	0.0000	0.0000	0.0000	0.0000	0.0000	0.0000
NBP[1]608*	0.0000	0.0000	0.0000	0.0000	0.0000	0.0000
NBP[1]634*	0.0000	0.0000	0.0000	0.0000	0.0000	0.0000
NBP[1]659*	0.0000	0.0000	0.0000	0.0000	0.0000	0.0000
NBP[1]685*	0.0000	0.0000	0.0000	0.0000	0.0000	0.0000
NBP[1]711*	0.0000	0.0000	0.0000	0.0000	0.0000	0.0000
NBP[1]736*	0.0000	0.0000	0.0000	0.0000	0.0000	0.0000
NBP[1]762*	0.0000	0.0000	0.0000	0.0000	0.0000	0.0000
NBP[1]788*	0.0000	0.0000	0.0000	0.0000	0.0000	0.0000
NBP[1]825*	0.0000	0.0000	0.0000	0.0000	0.0000	0.0000
NBP[1]873*	0.0000	0.0000	0.0000	0.0000	0.0000	0.0000
NBP[1]926*	0.0000	0.0000	0.0000	0.0000	0.0000	0.0000
NBP[1]978*	0.0000	0.0000	0.0000	0.0000	0.0000	0.0000
NBP[1]1021*	0.0000	0.0000	0.0000	0.0000	0.0000	0.0000
NBP[1]1075*	0.0000	0.0000	0.0000	0.0000	0.0000	0.0000
NBP[1]1123*	0.0000	0.0000	0.0000	0.0000	0.0000	0.0000
NBP[1]1173*	0.0000	0.0000	0.0000	0.0000	0.0000	0.0000
NBP[1]1250*	0.0000	0.0000	0.0000	0.0000	0.0000	0.0000
NBP[1]1339*	0.0000	0.0000	0.0000	0.0000	0.0000	0.0000
NBP[1]1432*	0.0000	0.0000	0.0000	0.0000	0.0000	0.0000
NBP[1]1528*	0.0000	0.0000	0.0000	0.0000	0.0000	0.0000
NBP[1]1637*	0.0000	0.0000	0.0000	0.0000	0.0000	0.0000
NBP[1]1732*	0.0000	0.0000	0.0000	0.0000	0.0000	0.0000
NBP[1]1819*	0.0000	0.0000	0.0000	0.0017	0.0000	0.0006
NBP[1]1913*	0.0000	0.0000	0.0000	0.0021	0.0000	0.0007
Total	0.0000	1.0000	0.0000	1.0000	0.0000	1.0000

Liquid Phase

Phase Fraction 1.000

COMPONENTS	MOLAR FLOW (kgmole/h)	MOLE FRACTION	MASS FLOW (tonne/d)	MASS FRACTION	LIQUID VOLUME FLOW (m3/h)	LIQUID VOLUME FRACTION
Methane	2.9680	0.2133	1.1428	0.0254	0.1590	0.0653
Ethane	0.9898	0.0711	0.7143	0.0159	0.0837	0.0343
Propane	0.9969	0.0717	1.0551	0.0235	0.0868	0.0356
i-Butane	0.2099	0.0151	0.2929	0.0065	0.0217	0.0089
n-Butane	0.4797	0.0345	0.6692	0.0149	0.0478	0.0196
i-Pentane	0.1582	0.0114	0.2739	0.0061	0.0183	0.0075
n-Pentane	0.2009	0.0144	0.3479	0.0077	0.0230	0.0094
n-Hexane	0.4893	0.0352	1.0120	0.0225	0.0636	0.0261
Nitrogen	0.0456	0.0033	0.0307	0.0007	0.0016	0.0007
CO2	0.2490	0.0179	0.2630	0.0058	0.0133	0.0054
H2S	0.0000	0.0000	0.0000	0.0000	0.0000	0.0000
H2O	0.0638	0.0046	0.0276	0.0006	0.0012	0.0005
NBP[1]95*	0.0609	0.0044	0.0994	0.0022	0.0061	0.0025
NBP[1]121*	0.0868	0.0062	0.1518	0.0034	0.0092	0.0038
NBP[1]147*	0.1345	0.0097	0.2589	0.0058	0.0154	0.0063
NBP[1]171*	0.3052	0.0219	0.6423	0.0143	0.0376	0.0154
NBP[1]195*	0.4692	0.0337	1.0536	0.0234	0.0610	0.0250
NBP[1]222*	0.4143	0.0298	1.0008	0.0223	0.0572	0.0235
NBP[1]248*	0.3971	0.0285	1.0312	0.0229	0.0582	0.0239
NBP[1]273*	0.3602	0.0259	1.0003	0.0222	0.0558	0.0229
NBP[1]299*	0.3105	0.0223	0.9193	0.0204	0.0508	0.0208
NBP[1]325*	0.2436	0.0175	0.7664	0.0170	0.0419	0.0172

* Specified by user.

Material Stream: Pandhi-Cond. (continued)

Fluid Package: Basis-1
Property Package: Peng-Robinson

COMPOSITION

Liquid Phase (continued)

Phase Fraction 1.000

COMPONENTS	MOLAR FLOW (kgmole/h)	MOLE FRACTION	MASS FLOW (tonne/d)	MASS FRACTION	LIQUID VOLUME FLOW (m3/h)	LIQUID VOLUME FRACTION
NBP[1]351*	0.2104	0.0151	0.7035	0.0156	0.0381	0.0156
NBP[1]377*	0.2019	0.0145	0.7201	0.0160	0.0386	0.0158
NBP[1]402*	0.1916	0.0138	0.7287	0.0162	0.0387	0.0159
NBP[1]428*	0.1868	0.0134	0.7579	0.0169	0.0398	0.0163
NBP[1]454*	0.1895	0.0136	0.8215	0.0183	0.0427	0.0175
NBP[1]480*	0.1942	0.0140	0.8996	0.0200	0.0463	0.0190
NBP[1]505*	0.1895	0.0136	0.9362	0.0208	0.0478	0.0196
NBP[1]531*	0.1837	0.0132	0.9662	0.0215	0.0488	0.0200
NBP[1]557*	0.1775	0.0128	0.9930	0.0221	0.0498	0.0204
NBP[1]582*	0.1701	0.0122	1.0102	0.0225	0.0502	0.0206
NBP[1]608*	0.1640	0.0118	1.0333	0.0230	0.0509	0.0209
NBP[1]634*	0.1609	0.0116	1.0743	0.0239	0.0525	0.0215
NBP[1]659*	0.1585	0.0114	1.1188	0.0249	0.0542	0.0223
NBP[1]685*	0.1641	0.0118	1.2224	0.0272	0.0588	0.0241
NBP[1]711*	0.1715	0.0123	1.3442	0.0299	0.0642	0.0263
NBP[1]736*	0.1697	0.0122	1.3914	0.0309	0.0659	0.0270
NBP[1]762*	0.1653	0.0119	1.4214	0.0316	0.0669	0.0274
NBP[1]788*	0.1585	0.0114	1.4423	0.0321	0.0674	0.0276
NBP[1]825*	0.2655	0.0191	2.5963	0.0577	0.1201	0.0493
NBP[1]873*	0.1830	0.0132	1.9404	0.0432	0.0887	0.0364
NBP[1]926*	0.1437	0.0103	1.6472	0.0366	0.0744	0.0305
NBP[1]978*	0.1474	0.0106	1.8524	0.0412	0.0825	0.0338
NBP[1]1021*	0.0728	0.0052	0.9655	0.0215	0.0426	0.0175
NBP[1]1075*	0.0449	0.0032	0.6310	0.0140	0.0276	0.0113
NBP[1]1123*	0.0417	0.0030	0.6267	0.0139	0.0271	0.0111
NBP[1]1173*	0.0300	0.0022	0.4772	0.0106	0.0205	0.0084
NBP[1]1250*	0.0393	0.0028	0.6767	0.0150	0.0287	0.0118
NBP[1]1339*	0.0364	0.0026	0.6999	0.0156	0.0291	0.0120
NBP[1]1432*	0.0257	0.0018	0.5397	0.0120	0.0221	0.0091
NBP[1]1528*	0.0180	0.0013	0.4082	0.0091	0.0165	0.0068
NBP[1]1637*	0.0127	0.0009	0.3047	0.0068	0.0122	0.0050
NBP[1]1732*	0.0101	0.0007	0.2564	0.0057	0.0101	0.0042
NBP[1]1819*	0.0002	0.0000	0.0045	0.0001	0.0002	0.0001
NBP[1]1913*	0.0000	0.0000	0.0000	0.0000	0.0000	0.0000
Total	13.9126	1.0000	44.9650	1.0000	2.4372	1.0000

Aqueous Phase

Phase Fraction 0.0000

COMPONENTS	MOLAR FLOW (kgmole/h)	MOLE FRACTION	MASS FLOW (tonne/d)	MASS FRACTION	LIQUID VOLUME FLOW (m3/h)	LIQUID VOLUME FRACTION
Methane	0.0000	0.0000	0.0000	0.0000	0.0000	0.0000
Ethane	0.0000	0.0000	0.0000	0.0000	0.0000	0.0000
Propane	0.0000	0.0000	0.0000	0.0000	0.0000	0.0000
i-Butane	0.0000	0.0000	0.0000	0.0000	0.0000	0.0000
n-Butane	0.0000	0.0000	0.0000	0.0000	0.0000	0.0000
i-Pentane	0.0000	0.0000	0.0000	0.0000	0.0000	0.0000
n-Pentane	0.0000	0.0000	0.0000	0.0000	0.0000	0.0000
n-Hexane	0.0000	0.0000	0.0000	0.0000	0.0000	0.0000
Nitrogen	0.0000	0.0000	0.0000	0.0000	0.0000	0.0000
CO2	0.0000	0.0004	0.0000	0.0010	0.0000	0.0012
H2S	0.0000	0.0000	0.0000	0.0000	0.0000	0.0000
H2O	0.0000	0.9996	0.0000	0.9990	0.0000	0.9987
NBP[1]95*	0.0000	0.0000	0.0000	0.0000	0.0000	0.0000
NBP[1]121*	0.0000	0.0000	0.0000	0.0000	0.0000	0.0000
NBP[1]147*	0.0000	0.0000	0.0000	0.0000	0.0000	0.0000

* Specified by user.

Material Stream: Pandhi-Cond. (continued)

Fluid Package: Basis-1
Property Package: Peng-Robinson

COMPOSITION

Aqueous Phase (continued)

Phase Fraction 0.0000

COMPONENTS	MOLAR FLOW (kgmole/h)	MOLE FRACTION	MASS FLOW (tonne/d)	MASS FRACTION	LIQUID VOLUME FLOW (m3/h)	LIQUID VOLUME FRACTION
NBP[1]171*	0.0000	0.0000	0.0000	0.0000	0.0000	0.0000
NBP[1]195*	0.0000	0.0000	0.0000	0.0000	0.0000	0.0000
NBP[1]222*	0.0000	0.0000	0.0000	0.0000	0.0000	0.0000
NBP[1]248*	0.0000	0.0000	0.0000	0.0000	0.0000	0.0000
NBP[1]273*	0.0000	0.0000	0.0000	0.0000	0.0000	0.0000
NBP[1]299*	0.0000	0.0000	0.0000	0.0000	0.0000	0.0000
NBP[1]325*	0.0000	0.0000	0.0000	0.0000	0.0000	0.0000
NBP[1]351*	0.0000	0.0000	0.0000	0.0000	0.0000	0.0000
NBP[1]377*	0.0000	0.0000	0.0000	0.0000	0.0000	0.0000
NBP[1]402*	0.0000	0.0000	0.0000	0.0000	0.0000	0.0000
NBP[1]428*	0.0000	0.0000	0.0000	0.0000	0.0000	0.0000
NBP[1]454*	0.0000	0.0000	0.0000	0.0000	0.0000	0.0000
NBP[1]480*	0.0000	0.0000	0.0000	0.0000	0.0000	0.0000
NBP[1]505*	0.0000	0.0000	0.0000	0.0000	0.0000	0.0000
NBP[1]531*	0.0000	0.0000	0.0000	0.0000	0.0000	0.0000
NBP[1]557*	0.0000	0.0000	0.0000	0.0000	0.0000	0.0000
NBP[1]582*	0.0000	0.0000	0.0000	0.0000	0.0000	0.0000
NBP[1]608*	0.0000	0.0000	0.0000	0.0000	0.0000	0.0000
NBP[1]634*	0.0000	0.0000	0.0000	0.0000	0.0000	0.0000
NBP[1]659*	0.0000	0.0000	0.0000	0.0000	0.0000	0.0000
NBP[1]685*	0.0000	0.0000	0.0000	0.0000	0.0000	0.0000
NBP[1]711*	0.0000	0.0000	0.0000	0.0000	0.0000	0.0000
NBP[1]736*	0.0000	0.0000	0.0000	0.0000	0.0000	0.0000
NBP[1]762*	0.0000	0.0000	0.0000	0.0000	0.0000	0.0000
NBP[1]788*	0.0000	0.0000	0.0000	0.0000	0.0000	0.0000
NBP[1]825*	0.0000	0.0000	0.0000	0.0000	0.0000	0.0000
NBP[1]873*	0.0000	0.0000	0.0000	0.0000	0.0000	0.0000
NBP[1]926*	0.0000	0.0000	0.0000	0.0000	0.0000	0.0000
NBP[1]978*	0.0000	0.0000	0.0000	0.0000	0.0000	0.0000
NBP[1]1021*	0.0000	0.0000	0.0000	0.0000	0.0000	0.0000
NBP[1]1075*	0.0000	0.0000	0.0000	0.0000	0.0000	0.0000
NBP[1]1123*	0.0000	0.0000	0.0000	0.0000	0.0000	0.0000
NBP[1]1173*	0.0000	0.0000	0.0000	0.0000	0.0000	0.0000
NBP[1]1250*	0.0000	0.0000	0.0000	0.0000	0.0000	0.0000
NBP[1]1339*	0.0000	0.0000	0.0000	0.0000	0.0000	0.0000
NBP[1]1432*	0.0000	0.0000	0.0000	0.0000	0.0000	0.0000
NBP[1]1528*	0.0000	0.0000	0.0000	0.0000	0.0000	0.0000
NBP[1]1637*	0.0000	0.0000	0.0000	0.0000	0.0000	0.0000
NBP[1]1732*	0.0000	0.0000	0.0000	0.0000	0.0000	0.0000
NBP[1]1819*	0.0000	0.0000	0.0000	0.0000	0.0000	0.0000
NBP[1]1913*	0.0000	0.0000	0.0000	0.0000	0.0000	0.0000
Total	0.0000	1.0000	0.0000	1.0000	0.0000	1.0000

Material Stream: Pandhi-Gas

Fluid Package: Basis-1
Property Package: Peng-Robinson

CONDITIONS

		Overall	Vapour Phase	Liquid Phase	Aqueous Phase
Vapour / Phase Fraction		1.0000	1.0000	0.0000	0.0000
Temperature:	(F)	84.79	84.79	84.79	84.79
Pressure:	(psig)	445.0	445.0	445.0	445.0
Molar Flow	(MMSCFD)	5.381	5.381	0.0000	0.0000
Mass Flow	(tonne/d)	137.6	137.6	0.0000	0.0000
Std Ideal Liq Vol Flow	(barrel/day)	2403	2403	0.0000	0.0000

* Specified by user.

Material Stream: Pandhi-Gas (continued)

Fluid Package: Basis-1
Property Package: Peng-Robinson

CONDITIONS

	Overall	Vapour Phase	Liquid Phase	Aqueous Phase
Molar Enthalpy (kJ/kgmole)	-8.928e+004	-8.928e+004	-2.875e+005	-2.859e+005
Molar Entropy (kJ/kgmole-C)	159.3	159.3	218.7	54.83
Heat Flow (MMBtu/hr)	-22.68	-22.68	0.0000	0.0000
Liq Vol Flow @Std Cond (barrel/day)	9.528e+005 *	9.528e+005	0.0000	0.0000

PROPERTIES

	Overall	Vapour Phase	Liquid Phase	Aqueous Phase
Molecular Weight	21.39	21.39	126.4	18.03
Molar Density (kgmole/m3)	1.408	1.408	6.079	55.76
Mass Density (kg/m3)	30.10	30.10	768.1	1005
Act. Volume Flow (barrel/day)	2.874e+004	2.874e+004	0.0000	0.0000
Mass Enthalpy (kJ/kg)	-4175	-4175	-2275	-1.586e+004
Mass Entropy (kJ/kg-C)	7.448	7.448	1.731	3.042
Heat Capacity (kJ/kgmole-C)	47.13	47.13	253.8	77.64
Mass Heat Capacity (kJ/kg-C)	2.204	2.204	2.009	4.307
LHV Molar Basis (Std) (Btu/SCF)	---	---	---	1.809e-004
LHV Mass Basis (Std) (kJ/kg)	---	---	---	8.858e-003
Phase Fraction [Vol. Basis]	1.000	1.000	---	---
Phase Fraction [Mass Basis]	1.000	1.000	0.0000	0.0000
Partial Pressure of CO2 (psig)	0.9692	---	---	---
Cost Based on Flow (Cost/s)	0.0000	0.0000	0.0000	0.0000
Act. Gas Flow (ACT_m3/h)	190.4	190.4	---	---
Avg. Liq. Density (kgmole/m3)	16.84	16.84	5.980	55.35
Specific Heat (kJ/kgmole-C)	47.13	47.13	253.8	77.64
Std. Gas Flow (STD_m3/h)	6337	6337	0.0000	0.0000
Std. Ideal Liq. Mass Density (kg/m3)	360.1	360.1	755.6	997.8
Act. Liq. Flow (barrel/day)	0.0000	---	---	0.0000
Z Factor	---	0.8953	0.2073	2.260e-002
Watson K	17.28	17.28	11.99	8.497
User Property	---	---	---	---
Partial Pressure of H2S (psig)	-14.70	---	---	---
Cp/(Cp - R)	1.214	1.214	1.034	1.120
Cp/Cv	1.388	1.388	1.034	1.149
Heat of Vap. (kJ/kgmole)	1.879e+004	---	---	---
Kinematic Viscosity (cSt)	0.3993	0.3993	12.25	0.8047
Liq. Mass Density (Std. Cond) (kg/m3)	0.9081	0.9081	781.8	1015
Liq. Vol. Flow (Std. Cond) (barrel/day)	9.528e+005	9.528e+005	0.0000	0.0000
Liquid Fraction	0.0000	0.0000	1.000	1.000
Molar Volume (m3/kgmole)	0.7104	0.7104	0.1645	1.793e-002
Mass Heat of Vap. (kJ/kg)	878.6	---	---	---
Phase Fraction [Molar Basis]	1.0000	1.0000	0.0000	0.0000
Surface Tension (dyne/cm)	---	---	15.96	71.32
Thermal Conductivity (W/m-K)	3.302e-002	3.302e-002	0.1006	0.6173
Viscosity (cP)	1.202e-002	1.202e-002	9.409	0.8089
Cv (Semi-Ideal) (kJ/kgmole-C)	38.81	38.81	245.5	69.33
Mass Cv (Semi-Ideal) (kJ/kg-C)	1.815	1.815	1.943	3.846
Cv (kJ/kgmole-C)	33.96	33.96	245.5	67.56
Mass Cv (kJ/kg-C)	1.588	1.588	1.943	3.748
Cv (Ent. Method) (kJ/kgmole-C)	-508.4	-3697	---	66.88
Mass Cv (Ent. Method) (kJ/kg-C)	-23.77	-172.9	---	3.711
Cp/Cv (Ent. Method)	-9.270e-002	-1.275e-002	---	1.161
Reid VP at 37.8 C (psig)	---	---	97.87	---
True VP at 37.8 C (psig)	3607	3607	475.9	17.11
Liq. Vol. Flow - Sum(Std. Cond) (barrel/day)	9.528e+005	9.528e+005	0.0000	0.0000
HHV Molar Basis (Std) (Btu/SCF)	---	---	---	46.45
HHV Mass Basis (Std) (kJ/kg)	---	---	---	2274
CO2 Loading	---	---	---	---

* Specified by user.

Material Stream: Pandhi-Gas (continued)

Fluid Package: Basis-1
Property Package: Peng-Robinson

PROPERTIES

	Overall	Vapour Phase	Liquid Phase	Aqueous Phase
CO2 App ML Con (kgmole/m3)	---	---	---	---
CO2 App WT Con (kgmol/kg)	---	---	---	---
Phase Fraction [Act. Vol. Basis]	1.000	1.000	0.0000	0.0000
Mass Exergy (kJ/kg)	387.1	---	---	---
Viscosity Index	-58.95	---	---	---
Ideal Gas Cp/Cv	1.249	1.249	1.043	1.329
Ideal Gas Cp (kJ/kgmole-C)	41.72	41.72	200.0	33.60
Mass Ideal Gas Cp (kJ/kg-C)	1.951	1.951	1.583	1.864
Bubble Point Pressure (psig)	4658	---	---	---

COMPOSITION

Overall Phase

Vapour Fraction 1.0000

COMPONENTS	MOLAR FLOW (kgmole/h)	MOLE FRACTION	MASS FLOW (tonne/d)	MASS FRACTION	LIQUID VOLUME FLOW (m3/h)	LIQUID VOLUME FRACTION
Methane	205.0219	0.7649	78.9395	0.5738	10.9860	0.6901
Ethane	27.6541	0.1032	19.9573	0.1451	2.3379	0.1469
Propane	13.5902	0.0507	14.3829	0.1046	1.1828	0.0743
i-Butane	1.5866	0.0059	2.2133	0.0161	0.1641	0.0103
n-Butane	2.8841	0.0108	4.0233	0.0292	0.2874	0.0181
i-Pentane	0.4635	0.0017	0.8025	0.0058	0.0536	0.0034
n-Pentane	0.4652	0.0017	0.8056	0.0059	0.0533	0.0033
n-Hexane	0.3694	0.0014	0.7639	0.0056	0.0480	0.0030
Nitrogen	5.5752	0.0208	3.7483	0.0272	0.1937	0.0122
CO2	9.1335	0.0341	9.6471	0.0701	0.4870	0.0306
H2S	0.0005	0.0000	0.0004	0.0000	0.0000	0.0000
H2O	0.3945	0.0015	0.1706	0.0012	0.0071	0.0004
NBP[1]95*	0.1425	0.0005	0.2323	0.0017	0.0142	0.0009
NBP[1]121*	0.1318	0.0005	0.2305	0.0017	0.0139	0.0009
NBP[1]147*	0.1254	0.0005	0.2414	0.0018	0.0144	0.0009
NBP[1]171*	0.1733	0.0006	0.3646	0.0027	0.0213	0.0013
NBP[1]195*	0.1579	0.0006	0.3546	0.0026	0.0205	0.0013
NBP[1]222*	0.0732	0.0003	0.1768	0.0013	0.0101	0.0006
NBP[1]248*	0.0375	0.0001	0.0974	0.0007	0.0055	0.0003
NBP[1]273*	0.0181	0.0001	0.0503	0.0004	0.0028	0.0002
NBP[1]299*	0.0083	0.0000	0.0245	0.0002	0.0014	0.0001
NBP[1]325*	0.0033	0.0000	0.0105	0.0001	0.0006	0.0000
NBP[1]351*	0.0015	0.0000	0.0050	0.0000	0.0003	0.0000
NBP[1]377*	0.0007	0.0000	0.0025	0.0000	0.0001	0.0000
NBP[1]402*	0.0003	0.0000	0.0013	0.0000	0.0001	0.0000
NBP[1]428*	0.0002	0.0000	0.0007	0.0000	0.0000	0.0000
NBP[1]454*	0.0001	0.0000	0.0003	0.0000	0.0000	0.0000
NBP[1]480*	0.0000	0.0000	0.0002	0.0000	0.0000	0.0000
NBP[1]505*	0.0000	0.0000	0.0001	0.0000	0.0000	0.0000
NBP[1]531*	0.0000	0.0000	0.0000	0.0000	0.0000	0.0000
NBP[1]557*	0.0000	0.0000	0.0000	0.0000	0.0000	0.0000
NBP[1]582*	0.0000	0.0000	0.0000	0.0000	0.0000	0.0000
NBP[1]608*	0.0000	0.0000	0.0000	0.0000	0.0000	0.0000
NBP[1]634*	0.0000	0.0000	0.0000	0.0000	0.0000	0.0000
NBP[1]659*	0.0000	0.0000	0.0000	0.0000	0.0000	0.0000
NBP[1]685*	0.0000	0.0000	0.0000	0.0000	0.0000	0.0000
NBP[1]711*	0.0000	0.0000	0.0000	0.0000	0.0000	0.0000
NBP[1]736*	0.0000	0.0000	0.0000	0.0000	0.0000	0.0000
NBP[1]762*	0.0000	0.0000	0.0000	0.0000	0.0000	0.0000
NBP[1]788*	0.0000	0.0000	0.0000	0.0000	0.0000	0.0000
NBP[1]825*	0.0000	0.0000	0.0000	0.0000	0.0000	0.0000
NBP[1]873*	0.0000	0.0000	0.0000	0.0000	0.0000	0.0000

* Specified by user.

Material Stream: Pandhi-Gas (continued)

Fluid Package: Basis-1
Property Package: Peng-Robinson

COMPOSITION

Overall Phase (continued)

Vapour Fraction 1.0000

COMPONENTS	MOLAR FLOW (kgmole/h)	MOLE FRACTION	MASS FLOW (tonne/d)	MASS FRACTION	LIQUID VOLUME FLOW (m3/h)	LIQUID VOLUME FRACTION
NBP[1]926*	0.0000	0.0000	0.0000	0.0000	0.0000	0.0000
NBP[1]978*	0.0000	0.0000	0.0000	0.0000	0.0000	0.0000
NBP[1]1021*	0.0000	0.0000	0.0000	0.0000	0.0000	0.0000
NBP[1]1075*	0.0000	0.0000	0.0000	0.0000	0.0000	0.0000
NBP[1]1123*	0.0000	0.0000	0.0000	0.0000	0.0000	0.0000
NBP[1]1173*	0.0000	0.0000	0.0000	0.0000	0.0000	0.0000
NBP[1]1250*	0.0000	0.0000	0.0000	0.0000	0.0000	0.0000
NBP[1]1339*	0.0000	0.0000	0.0000	0.0000	0.0000	0.0000
NBP[1]1432*	0.0000	0.0000	0.0000	0.0000	0.0000	0.0000
NBP[1]1528*	0.0000	0.0000	0.0000	0.0000	0.0000	0.0000
NBP[1]1637*	0.0000	0.0000	0.0000	0.0000	0.0000	0.0000
NBP[1]1732*	0.0000	0.0000	0.0000	0.0000	0.0000	0.0000
NBP[1]1819*	0.0001	0.0000	0.0029	0.0000	0.0001	0.0000
NBP[1]1913*	0.0112	0.0000	0.3148	0.0023	0.0121	0.0008
Total	268.0242	1.0000	137.5655	1.0000	15.9186	1.0000

Vapour Phase

Phase Fraction 1.000

COMPONENTS	MOLAR FLOW (kgmole/h)	MOLE FRACTION	MASS FLOW (tonne/d)	MASS FRACTION	LIQUID VOLUME FLOW (m3/h)	LIQUID VOLUME FRACTION
Methane	205.0219	0.7649	78.9395	0.5738	10.9860	0.6901
Ethane	27.6541	0.1032	19.9573	0.1451	2.3379	0.1469
Propane	13.5902	0.0507	14.3829	0.1046	1.1828	0.0743
i-Butane	1.5866	0.0059	2.2133	0.0161	0.1641	0.0103
n-Butane	2.8841	0.0108	4.0233	0.0292	0.2874	0.0181
i-Pentane	0.4635	0.0017	0.8025	0.0058	0.0536	0.0034
n-Pentane	0.4652	0.0017	0.8056	0.0059	0.0533	0.0033
n-Hexane	0.3694	0.0014	0.7639	0.0056	0.0480	0.0030
Nitrogen	5.5752	0.0208	3.7483	0.0272	0.1937	0.0122
CO2	9.1335	0.0341	9.6471	0.0701	0.4870	0.0306
H2S	0.0005	0.0000	0.0004	0.0000	0.0000	0.0000
H2O	0.3945	0.0015	0.1706	0.0012	0.0071	0.0004
NBP[1]95*	0.1425	0.0005	0.2323	0.0017	0.0142	0.0009
NBP[1]121*	0.1318	0.0005	0.2305	0.0017	0.0139	0.0009
NBP[1]147*	0.1254	0.0005	0.2414	0.0018	0.0144	0.0009
NBP[1]171*	0.1733	0.0006	0.3646	0.0027	0.0213	0.0013
NBP[1]195*	0.1579	0.0006	0.3546	0.0026	0.0205	0.0013
NBP[1]222*	0.0732	0.0003	0.1768	0.0013	0.0101	0.0006
NBP[1]248*	0.0375	0.0001	0.0974	0.0007	0.0055	0.0003
NBP[1]273*	0.0181	0.0001	0.0503	0.0004	0.0028	0.0002
NBP[1]299*	0.0083	0.0000	0.0245	0.0002	0.0014	0.0001
NBP[1]325*	0.0033	0.0000	0.0105	0.0001	0.0006	0.0000
NBP[1]351*	0.0015	0.0000	0.0050	0.0000	0.0003	0.0000
NBP[1]377*	0.0007	0.0000	0.0025	0.0000	0.0001	0.0000
NBP[1]402*	0.0003	0.0000	0.0013	0.0000	0.0001	0.0000
NBP[1]428*	0.0002	0.0000	0.0007	0.0000	0.0000	0.0000
NBP[1]454*	0.0001	0.0000	0.0003	0.0000	0.0000	0.0000
NBP[1]480*	0.0000	0.0000	0.0002	0.0000	0.0000	0.0000
NBP[1]505*	0.0000	0.0000	0.0001	0.0000	0.0000	0.0000
NBP[1]531*	0.0000	0.0000	0.0000	0.0000	0.0000	0.0000
NBP[1]557*	0.0000	0.0000	0.0000	0.0000	0.0000	0.0000
NBP[1]582*	0.0000	0.0000	0.0000	0.0000	0.0000	0.0000
NBP[1]608*	0.0000	0.0000	0.0000	0.0000	0.0000	0.0000
NBP[1]634*	0.0000	0.0000	0.0000	0.0000	0.0000	0.0000
NBP[1]659*	0.0000	0.0000	0.0000	0.0000	0.0000	0.0000

* Specified by user.

Material Stream: Pandhi-Gas (continued)

Fluid Package: Basis-1
Property Package: Peng-Robinson

COMPOSITION

Vapour Phase (continued)

Phase Fraction 1.000

COMPONENTS	MOLAR FLOW (kgmole/h)	MOLE FRACTION	MASS FLOW (tonne/d)	MASS FRACTION	LIQUID VOLUME FLOW (m3/h)	LIQUID VOLUME FRACTION
NBP[1]685*	0.0000	0.0000	0.0000	0.0000	0.0000	0.0000
NBP[1]711*	0.0000	0.0000	0.0000	0.0000	0.0000	0.0000
NBP[1]736*	0.0000	0.0000	0.0000	0.0000	0.0000	0.0000
NBP[1]762*	0.0000	0.0000	0.0000	0.0000	0.0000	0.0000
NBP[1]788*	0.0000	0.0000	0.0000	0.0000	0.0000	0.0000
NBP[1]825*	0.0000	0.0000	0.0000	0.0000	0.0000	0.0000
NBP[1]873*	0.0000	0.0000	0.0000	0.0000	0.0000	0.0000
NBP[1]926*	0.0000	0.0000	0.0000	0.0000	0.0000	0.0000
NBP[1]978*	0.0000	0.0000	0.0000	0.0000	0.0000	0.0000
NBP[1]1021*	0.0000	0.0000	0.0000	0.0000	0.0000	0.0000
NBP[1]1075*	0.0000	0.0000	0.0000	0.0000	0.0000	0.0000
NBP[1]1123*	0.0000	0.0000	0.0000	0.0000	0.0000	0.0000
NBP[1]1173*	0.0000	0.0000	0.0000	0.0000	0.0000	0.0000
NBP[1]1250*	0.0000	0.0000	0.0000	0.0000	0.0000	0.0000
NBP[1]1339*	0.0000	0.0000	0.0000	0.0000	0.0000	0.0000
NBP[1]1432*	0.0000	0.0000	0.0000	0.0000	0.0000	0.0000
NBP[1]1528*	0.0000	0.0000	0.0000	0.0000	0.0000	0.0000
NBP[1]1637*	0.0000	0.0000	0.0000	0.0000	0.0000	0.0000
NBP[1]1732*	0.0000	0.0000	0.0000	0.0000	0.0000	0.0000
NBP[1]1819*	0.0001	0.0000	0.0029	0.0000	0.0001	0.0000
NBP[1]1913*	0.0112	0.0000	0.3148	0.0023	0.0121	0.0008
Total	268.0242	1.0000	137.5655	1.0000	15.9186	1.0000

Liquid Phase

Phase Fraction 0.0000

COMPONENTS	MOLAR FLOW (kgmole/h)	MOLE FRACTION	MASS FLOW (tonne/d)	MASS FRACTION	LIQUID VOLUME FLOW (m3/h)	LIQUID VOLUME FRACTION
Methane	0.0000	0.1136	0.0000	0.0144	0.0000	0.0364
Ethane	0.0000	0.0644	0.0000	0.0153	0.0000	0.0326
Propane	0.0000	0.0942	0.0000	0.0329	0.0000	0.0490
i-Butane	0.0000	0.0248	0.0000	0.0114	0.0000	0.0154
n-Butane	0.0000	0.0600	0.0000	0.0276	0.0000	0.0357
i-Pentane	0.0000	0.0217	0.0000	0.0124	0.0000	0.0150
n-Pentane	0.0000	0.0278	0.0000	0.0159	0.0000	0.0191
n-Hexane	0.0000	0.0618	0.0000	0.0422	0.0000	0.0481
Nitrogen	0.0000	0.0013	0.0000	0.0003	0.0000	0.0003
CO2	0.0000	0.0134	0.0000	0.0047	0.0000	0.0043
H2S	0.0000	0.0000	0.0000	0.0000	0.0000	0.0000
H2O	0.0000	0.0006	0.0000	0.0001	0.0000	0.0001
NBP[1]95*	0.0000	0.0082	0.0000	0.0044	0.0000	0.0049
NBP[1]121*	0.0000	0.0116	0.0000	0.0067	0.0000	0.0073
NBP[1]147*	0.0000	0.0172	0.0000	0.0109	0.0000	0.0118
NBP[1]171*	0.0000	0.0365	0.0000	0.0253	0.0000	0.0269
NBP[1]195*	0.0000	0.0516	0.0000	0.0382	0.0000	0.0401
NBP[1]222*	0.0000	0.0408	0.0000	0.0325	0.0000	0.0337
NBP[1]248*	0.0000	0.0353	0.0000	0.0302	0.0000	0.0309
NBP[1]273*	0.0000	0.0291	0.0000	0.0266	0.0000	0.0270
NBP[1]299*	0.0000	0.0230	0.0000	0.0225	0.0000	0.0225
NBP[1]325*	0.0000	0.0168	0.0000	0.0175	0.0000	0.0173
NBP[1]351*	0.0000	0.0137	0.0000	0.0151	0.0000	0.0148
NBP[1]377*	0.0000	0.0126	0.0000	0.0148	0.0000	0.0144
NBP[1]402*	0.0000	0.0116	0.0000	0.0145	0.0000	0.0139
NBP[1]428*	0.0000	0.0110	0.0000	0.0147	0.0000	0.0140
NBP[1]454*	0.0000	0.0110	0.0000	0.0157	0.0000	0.0148
NBP[1]480*	0.0000	0.0111	0.0000	0.0170	0.0000	0.0159

Licensed to: PETROCHEMICAL ENGINEERIN
* Specified by user.

Material Stream: Pandhi-Gas (continued)

Fluid Package: Basis-1
Property Package: Peng-Robinson

COMPOSITION

Liquid Phase (continued)

Phase Fraction 0.0000

COMPONENTS	MOLAR FLOW (kgmole/h)	MOLE FRACTION	MASS FLOW (tonne/d)	MASS FRACTION	LIQUID VOLUME FLOW (m3/h)	LIQUID VOLUME FRACTION
NBP[1]505*	0.0000	0.0108	0.0000	0.0176	0.0000	0.0162
NBP[1]531*	0.0000	0.0104	0.0000	0.0180	0.0000	0.0165
NBP[1]557*	0.0000	0.0100	0.0000	0.0185	0.0000	0.0168
NBP[1]582*	0.0000	0.0096	0.0000	0.0188	0.0000	0.0169
NBP[1]608*	0.0000	0.0092	0.0000	0.0192	0.0000	0.0171
NBP[1]634*	0.0000	0.0090	0.0000	0.0199	0.0000	0.0177
NBP[1]659*	0.0000	0.0089	0.0000	0.0207	0.0000	0.0182
NBP[1]685*	0.0000	0.0092	0.0000	0.0227	0.0000	0.0198
NBP[1]711*	0.0000	0.0096	0.0000	0.0249	0.0000	0.0216
NBP[1]736*	0.0000	0.0095	0.0000	0.0258	0.0000	0.0221
NBP[1]762*	0.0000	0.0093	0.0000	0.0263	0.0000	0.0225
NBP[1]788*	0.0000	0.0089	0.0000	0.0267	0.0000	0.0226
NBP[1]825*	0.0000	0.0149	0.0000	0.0481	0.0000	0.0404
NBP[1]873*	0.0000	0.0103	0.0000	0.0359	0.0000	0.0298
NBP[1]926*	0.0000	0.0081	0.0000	0.0305	0.0000	0.0250
NBP[1]978*	0.0000	0.0083	0.0000	0.0343	0.0000	0.0277
NBP[1]1021*	0.0000	0.0041	0.0000	0.0179	0.0000	0.0143
NBP[1]1075*	0.0000	0.0025	0.0000	0.0117	0.0000	0.0093
NBP[1]1123*	0.0000	0.0023	0.0000	0.0116	0.0000	0.0091
NBP[1]1173*	0.0000	0.0017	0.0000	0.0088	0.0000	0.0069
NBP[1]1250*	0.0000	0.0022	0.0000	0.0125	0.0000	0.0096
NBP[1]1339*	0.0000	0.0020	0.0000	0.0130	0.0000	0.0098
NBP[1]1432*	0.0000	0.0014	0.0000	0.0100	0.0000	0.0074
NBP[1]1528*	0.0000	0.0010	0.0000	0.0076	0.0000	0.0055
NBP[1]1637*	0.0000	0.0007	0.0000	0.0056	0.0000	0.0041
NBP[1]1732*	0.0000	0.0006	0.0000	0.0048	0.0000	0.0034
NBP[1]1819*	0.0000	0.0005	0.0000	0.0047	0.0000	0.0034
NBP[1]1913*	0.0000	0.0000	0.0000	0.0000	0.0000	0.0000
Total	0.0000	1.0000	0.0000	1.0000	0.0000	1.0000

Aqueous Phase

Phase Fraction 0.0000

COMPONENTS	MOLAR FLOW (kgmole/h)	MOLE FRACTION	MASS FLOW (tonne/d)	MASS FRACTION	LIQUID VOLUME FLOW (m3/h)	LIQUID VOLUME FRACTION
Methane	0.0000	0.0000	0.0000	0.0000	0.0000	0.0000
Ethane	0.0000	0.0000	0.0000	0.0000	0.0000	0.0000
Propane	0.0000	0.0000	0.0000	0.0000	0.0000	0.0000
i-Butane	0.0000	0.0000	0.0000	0.0000	0.0000	0.0000
n-Butane	0.0000	0.0000	0.0000	0.0000	0.0000	0.0000
i-Pentane	0.0000	0.0000	0.0000	0.0000	0.0000	0.0000
n-Pentane	0.0000	0.0000	0.0000	0.0000	0.0000	0.0000
n-Hexane	0.0000	0.0000	0.0000	0.0000	0.0000	0.0000
Nitrogen	0.0000	0.0000	0.0000	0.0000	0.0000	0.0000
CO2	0.0000	0.0004	0.0000	0.0010	0.0000	0.0012
H2S	0.0000	0.0000	0.0000	0.0000	0.0000	0.0000
H2O	0.0000	0.9996	0.0000	0.9990	0.0000	0.9988
NBP[1]95*	0.0000	0.0000	0.0000	0.0000	0.0000	0.0000
NBP[1]121*	0.0000	0.0000	0.0000	0.0000	0.0000	0.0000
NBP[1]147*	0.0000	0.0000	0.0000	0.0000	0.0000	0.0000
NBP[1]171*	0.0000	0.0000	0.0000	0.0000	0.0000	0.0000
NBP[1]195*	0.0000	0.0000	0.0000	0.0000	0.0000	0.0000
NBP[1]222*	0.0000	0.0000	0.0000	0.0000	0.0000	0.0000
NBP[1]248*	0.0000	0.0000	0.0000	0.0000	0.0000	0.0000
NBP[1]273*	0.0000	0.0000	0.0000	0.0000	0.0000	0.0000
NBP[1]299*	0.0000	0.0000	0.0000	0.0000	0.0000	0.0000

* Specified by user.

Material Stream: Pandhi-Gas (continued)

Fluid Package: Basis-1
Property Package: Peng-Robinson

COMPOSITION

Aqueous Phase (continued)

Phase Fraction 0.0000

COMPONENTS	MOLAR FLOW (kgmole/h)	MOLE FRACTION	MASS FLOW (tonne/d)	MASS FRACTION	LIQUID VOLUME FLOW (m3/h)	LIQUID VOLUME FRACTION
NBP[1]325*	0.0000	0.0000	0.0000	0.0000	0.0000	0.0000
NBP[1]351*	0.0000	0.0000	0.0000	0.0000	0.0000	0.0000
NBP[1]377*	0.0000	0.0000	0.0000	0.0000	0.0000	0.0000
NBP[1]402*	0.0000	0.0000	0.0000	0.0000	0.0000	0.0000
NBP[1]428*	0.0000	0.0000	0.0000	0.0000	0.0000	0.0000
NBP[1]454*	0.0000	0.0000	0.0000	0.0000	0.0000	0.0000
NBP[1]480*	0.0000	0.0000	0.0000	0.0000	0.0000	0.0000
NBP[1]505*	0.0000	0.0000	0.0000	0.0000	0.0000	0.0000
NBP[1]531*	0.0000	0.0000	0.0000	0.0000	0.0000	0.0000
NBP[1]557*	0.0000	0.0000	0.0000	0.0000	0.0000	0.0000
NBP[1]582*	0.0000	0.0000	0.0000	0.0000	0.0000	0.0000
NBP[1]608*	0.0000	0.0000	0.0000	0.0000	0.0000	0.0000
NBP[1]634*	0.0000	0.0000	0.0000	0.0000	0.0000	0.0000
NBP[1]659*	0.0000	0.0000	0.0000	0.0000	0.0000	0.0000
NBP[1]685*	0.0000	0.0000	0.0000	0.0000	0.0000	0.0000
NBP[1]711*	0.0000	0.0000	0.0000	0.0000	0.0000	0.0000
NBP[1]736*	0.0000	0.0000	0.0000	0.0000	0.0000	0.0000
NBP[1]762*	0.0000	0.0000	0.0000	0.0000	0.0000	0.0000
NBP[1]788*	0.0000	0.0000	0.0000	0.0000	0.0000	0.0000
NBP[1]825*	0.0000	0.0000	0.0000	0.0000	0.0000	0.0000
NBP[1]873*	0.0000	0.0000	0.0000	0.0000	0.0000	0.0000
NBP[1]926*	0.0000	0.0000	0.0000	0.0000	0.0000	0.0000
NBP[1]978*	0.0000	0.0000	0.0000	0.0000	0.0000	0.0000
NBP[1]1021*	0.0000	0.0000	0.0000	0.0000	0.0000	0.0000
NBP[1]1075*	0.0000	0.0000	0.0000	0.0000	0.0000	0.0000
NBP[1]1123*	0.0000	0.0000	0.0000	0.0000	0.0000	0.0000
NBP[1]1173*	0.0000	0.0000	0.0000	0.0000	0.0000	0.0000
NBP[1]1250*	0.0000	0.0000	0.0000	0.0000	0.0000	0.0000
NBP[1]1339*	0.0000	0.0000	0.0000	0.0000	0.0000	0.0000
NBP[1]1432*	0.0000	0.0000	0.0000	0.0000	0.0000	0.0000
NBP[1]1528*	0.0000	0.0000	0.0000	0.0000	0.0000	0.0000
NBP[1]1637*	0.0000	0.0000	0.0000	0.0000	0.0000	0.0000
NBP[1]1732*	0.0000	0.0000	0.0000	0.0000	0.0000	0.0000
NBP[1]1819*	0.0000	0.0000	0.0000	0.0000	0.0000	0.0000
NBP[1]1913*	0.0000	0.0000	0.0000	0.0000	0.0000	0.0000
Total	0.0000	1.0000	0.0000	1.0000	0.0000	1.0000

Material Stream: Pandhi-W

Fluid Package: Basis-1
Property Package: Peng-Robinson

CONDITIONS

		Overall	Vapour Phase	Liquid Phase	Aqueous Phase
Vapour / Phase Fraction		0.0000	0.0000	0.0000	1.0000
Temperature:	(F)	84.79	84.79	84.79	84.79
Pressure:	(psig)	445.0	445.0	445.0	445.0
Molar Flow	(MMSCFD)	2.135	0.0000	0.0000	2.135
Mass Flow	(tonne/d)	46.00	0.0000	0.0000	46.00
Std Ideal Liq Vol Flow	(barrel/day)	290.0	0.0000	0.0000	290.0
Molar Enthalpy	(kJ/kgmole)	-2.859e+005	-8.928e+004	-2.875e+005	-2.859e+005
Molar Entropy	(kJ/kgmole-C)	54.83	159.3	218.7	54.83
Heat Flow	(MMBtu/hr)	-28.81	0.0000	0.0000	-28.81
Liq Vol Flow @Std Cond	(barrel/day)	285.1 *	0.0000	0.0000	285.1

* Specified by user.

Material Stream: Pandhi-W (continued)

Fluid Package: Basis-1
Property Package: Peng-Robinson

PROPERTIES

	Overall	Vapour Phase	Liquid Phase	Aqueous Phase
Molecular Weight	18.03	21.39	126.4	18.03
Molar Density (kgmole/m3)	55.76	1.408	6.079	55.76
Mass Density (kg/m3)	1005	30.10	768.1	1005
Act. Volume Flow (barrel/day)	287.9	0.0000	0.0000	287.9
Mass Enthalpy (kJ/kg)	-1.586e+004	-4175	-2275	-1.586e+004
Mass Entropy (kJ/kg-C)	3.042	7.448	1.731	3.042
Heat Capacity (kJ/kgmole-C)	77.64	47.13	253.8	77.64
Mass Heat Capacity (kJ/kg-C)	4.307	2.204	2.009	4.307
LHV Molar Basis (Std) (Btu/SCF)	1.809e-004	---	---	1.809e-004
LHV Mass Basis (Std) (kJ/kg)	8.858e-003	---	---	8.858e-003
Phase Fraction [Vol. Basis]	---	---	---	1.000
Phase Fraction [Mass Basis]	0.0000	0.0000	0.0000	1.000
Partial Pressure of CO2 (psig)	-14.70	---	---	---
Cost Based on Flow (Cost/s)	0.0000	0.0000	0.0000	0.0000
Act. Gas Flow (ACT_m3/h)	---	---	---	---
Avg. Liq. Density (kgmole/m3)	55.35	16.84	5.980	55.35
Specific Heat (kJ/kgmole-C)	77.64	47.13	253.8	77.64
Std. Gas Flow (STD_m3/h)	2514	0.0000	0.0000	2514
Std. Ideal Liq. Mass Density (kg/m3)	997.8	360.1	755.6	997.8
Act. Liq. Flow (barrel/day)	287.9	---	---	287.9
Z Factor	---	0.8953	0.2073	2.260e-002
Watson K	8.497	17.28	11.99	8.497
User Property	---	---	---	---
Partial Pressure of H2S (psig)	-14.70	---	---	---
Cp/(Cp - R)	1.120	1.214	1.034	1.120
Cp/Cv	1.149	1.388	1.034	1.149
Heat of Vap. (kJ/kgmole)	3.304e+004	---	---	---
Kinematic Viscosity (cSt)	0.8047	0.3993	12.25	0.8047
Liq. Mass Density (Std. Cond) (kg/m3)	1015	0.9081	781.8	1015
Liq. Vol. Flow (Std. Cond) (barrel/day)	285.1	0.0000	0.0000	285.1
Liquid Fraction	1.000	0.0000	1.000	1.000
Molar Volume (m3/kgmole)	1.793e-002	0.7104	0.1645	1.793e-002
Mass Heat of Vap. (kJ/kg)	1833	---	---	---
Phase Fraction [Molar Basis]	0.0000	0.0000	0.0000	1.0000
Surface Tension (dyne/cm)	71.32	---	15.96	71.32
Thermal Conductivity (W/m-K)	0.6173	3.302e-002	0.1006	0.6173
Viscosity (cP)	0.8089	1.202e-002	9.409	0.8089
Cv (Semi-Ideal) (kJ/kgmole-C)	69.33	38.81	245.5	69.33
Mass Cv (Semi-Ideal) (kJ/kg-C)	3.846	1.815	1.943	3.846
Cv (kJ/kgmole-C)	67.56	33.96	245.5	67.56
Mass Cv (kJ/kg-C)	3.748	1.588	1.943	3.748
Cv (Ent. Method) (kJ/kgmole-C)	66.88	-3697	---	66.88
Mass Cv (Ent. Method) (kJ/kg-C)	3.711	-172.9	---	3.711
Cp/Cv (Ent. Method)	1.161	-1.275e-002	---	1.161
Reid VP at 37.8 C (psig)	---	---	97.87	---
True VP at 37.8 C (psig)	17.11	3607	475.9	17.11
Liq. Vol. Flow - Sum(Std. Cond) (barrel/day)	285.1	0.0000	0.0000	285.1
HHV Molar Basis (Std) (Btu/SCF)	46.45	---	---	46.45
HHV Mass Basis (Std) (kJ/kg)	2274	---	---	2274
CO2 Loading	---	---	---	---
CO2 App ML Con (kgmole/m3)	2.216e-002	---	---	2.216e-002
CO2 App WT Con (kgmol/kg)	2.204e-005	---	---	2.204e-005
Phase Fraction [Act. Vol. Basis]	0.0000	0.0000	0.0000	1.000
Mass Exergy (kJ/kg)	3.750	---	---	---
Viscosity Index	9.106e-002	---	---	---
Ideal Gas Cp/Cv	1.329	1.249	1.043	1.329
Ideal Gas Cp (kJ/kgmole-C)	33.60	41.72	200.0	33.60

* Specified by user.

Material Stream: Pandhi-W (continued)

Fluid Package: Basis-1
Property Package: Peng-Robinson

PROPERTIES

	Overall	Vapour Phase	Liquid Phase	Aqueous Phase
Mass Ideal Gas Cp (kJ/kg-C)	1.864	1.951	1.583	1.864
Bubble Point Pressure (psig)	12.46	---	---	---

COMPOSITION

Overall Phase

Vapour Fraction 0.0000

COMPONENTS	MOLAR FLOW (kgmole/h)	MOLE FRACTION	MASS FLOW (tonne/d)	MASS FRACTION	LIQUID VOLUME FLOW (m3/h)	LIQUID VOLUME FRACTION
Methane	0.0000	0.0000	0.0000	0.0000	0.0000	0.0000
Ethane	0.0000	0.0000	0.0000	0.0000	0.0000	0.0000
Propane	0.0000	0.0000	0.0000	0.0000	0.0000	0.0000
i-Butane	0.0000	0.0000	0.0000	0.0000	0.0000	0.0000
n-Butane	0.0000	0.0000	0.0000	0.0000	0.0000	0.0000
i-Pentane	0.0000	0.0000	0.0000	0.0000	0.0000	0.0000
n-Pentane	0.0000	0.0000	0.0000	0.0000	0.0000	0.0000
n-Hexane	0.0000	0.0000	0.0000	0.0000	0.0000	0.0000
Nitrogen	0.0008	0.0000	0.0006	0.0000	0.0000	0.0000
CO2	0.0423	0.0004	0.0446	0.0010	0.0023	0.0012
H2S	0.0000	0.0000	0.0000	0.0000	0.0000	0.0000
H2O	106.2938	0.9996	45.9575	0.9990	1.9188	0.9988
NBP[1]95*	0.0000	0.0000	0.0000	0.0000	0.0000	0.0000
NBP[1]121*	0.0000	0.0000	0.0000	0.0000	0.0000	0.0000
NBP[1]147*	0.0000	0.0000	0.0000	0.0000	0.0000	0.0000
NBP[1]171*	0.0000	0.0000	0.0000	0.0000	0.0000	0.0000
NBP[1]195*	0.0000	0.0000	0.0000	0.0000	0.0000	0.0000
NBP[1]222*	0.0000	0.0000	0.0000	0.0000	0.0000	0.0000
NBP[1]248*	0.0000	0.0000	0.0000	0.0000	0.0000	0.0000
NBP[1]273*	0.0000	0.0000	0.0000	0.0000	0.0000	0.0000
NBP[1]299*	0.0000	0.0000	0.0000	0.0000	0.0000	0.0000
NBP[1]325*	0.0000	0.0000	0.0000	0.0000	0.0000	0.0000
NBP[1]351*	0.0000	0.0000	0.0000	0.0000	0.0000	0.0000
NBP[1]377*	0.0000	0.0000	0.0000	0.0000	0.0000	0.0000
NBP[1]402*	0.0000	0.0000	0.0000	0.0000	0.0000	0.0000
NBP[1]428*	0.0000	0.0000	0.0000	0.0000	0.0000	0.0000
NBP[1]454*	0.0000	0.0000	0.0000	0.0000	0.0000	0.0000
NBP[1]480*	0.0000	0.0000	0.0000	0.0000	0.0000	0.0000
NBP[1]505*	0.0000	0.0000	0.0000	0.0000	0.0000	0.0000
NBP[1]531*	0.0000	0.0000	0.0000	0.0000	0.0000	0.0000
NBP[1]557*	0.0000	0.0000	0.0000	0.0000	0.0000	0.0000
NBP[1]582*	0.0000	0.0000	0.0000	0.0000	0.0000	0.0000
NBP[1]608*	0.0000	0.0000	0.0000	0.0000	0.0000	0.0000
NBP[1]634*	0.0000	0.0000	0.0000	0.0000	0.0000	0.0000
NBP[1]659*	0.0000	0.0000	0.0000	0.0000	0.0000	0.0000
NBP[1]685*	0.0000	0.0000	0.0000	0.0000	0.0000	0.0000
NBP[1]711*	0.0000	0.0000	0.0000	0.0000	0.0000	0.0000
NBP[1]736*	0.0000	0.0000	0.0000	0.0000	0.0000	0.0000
NBP[1]762*	0.0000	0.0000	0.0000	0.0000	0.0000	0.0000
NBP[1]788*	0.0000	0.0000	0.0000	0.0000	0.0000	0.0000
NBP[1]825*	0.0000	0.0000	0.0000	0.0000	0.0000	0.0000
NBP[1]873*	0.0000	0.0000	0.0000	0.0000	0.0000	0.0000
NBP[1]926*	0.0000	0.0000	0.0000	0.0000	0.0000	0.0000
NBP[1]978*	0.0000	0.0000	0.0000	0.0000	0.0000	0.0000
NBP[1]1021*	0.0000	0.0000	0.0000	0.0000	0.0000	0.0000
NBP[1]1075*	0.0000	0.0000	0.0000	0.0000	0.0000	0.0000
NBP[1]1123*	0.0000	0.0000	0.0000	0.0000	0.0000	0.0000
NBP[1]1173*	0.0000	0.0000	0.0000	0.0000	0.0000	0.0000
NBP[1]1250*	0.0000	0.0000	0.0000	0.0000	0.0000	0.0000

* Specified by user.

Material Stream: Pandhi-W (continued)

Fluid Package: Basis-1
Property Package: Peng-Robinson

COMPOSITION

Overall Phase (continued)

Vapour Fraction 0.0000

COMPONENTS	MOLAR FLOW (kgmole/h)	MOLE FRACTION	MASS FLOW (tonne/d)	MASS FRACTION	LIQUID VOLUME FLOW (m3/h)	LIQUID VOLUME FRACTION
NBP[1]1339*	0.0000	0.0000	0.0000	0.0000	0.0000	0.0000
NBP[1]1432*	0.0000	0.0000	0.0000	0.0000	0.0000	0.0000
NBP[1]1528*	0.0000	0.0000	0.0000	0.0000	0.0000	0.0000
NBP[1]1637*	0.0000	0.0000	0.0000	0.0000	0.0000	0.0000
NBP[1]1732*	0.0000	0.0000	0.0000	0.0000	0.0000	0.0000
NBP[1]1819*	0.0000	0.0000	0.0000	0.0000	0.0000	0.0000
NBP[1]1913*	0.0000	0.0000	0.0000	0.0000	0.0000	0.0000
Total	106.3369	1.0000	46.0026	1.0000	1.9210	1.0000

Vapour Phase

Phase Fraction 0.0000

COMPONENTS	MOLAR FLOW (kgmole/h)	MOLE FRACTION	MASS FLOW (tonne/d)	MASS FRACTION	LIQUID VOLUME FLOW (m3/h)	LIQUID VOLUME FRACTION
Methane	0.0000	0.7649	0.0000	0.5738	0.0000	0.6901
Ethane	0.0000	0.1032	0.0000	0.1451	0.0000	0.1469
Propane	0.0000	0.0507	0.0000	0.1046	0.0000	0.0743
i-Butane	0.0000	0.0059	0.0000	0.0161	0.0000	0.0103
n-Butane	0.0000	0.0108	0.0000	0.0292	0.0000	0.0181
i-Pentane	0.0000	0.0017	0.0000	0.0058	0.0000	0.0034
n-Pentane	0.0000	0.0017	0.0000	0.0059	0.0000	0.0033
n-Hexane	0.0000	0.0014	0.0000	0.0056	0.0000	0.0030
Nitrogen	0.0000	0.0208	0.0000	0.0272	0.0000	0.0122
CO2	0.0000	0.0341	0.0000	0.0701	0.0000	0.0306
H2S	0.0000	0.0000	0.0000	0.0000	0.0000	0.0000
H2O	0.0000	0.0015	0.0000	0.0012	0.0000	0.0004
NBP[1]95*	0.0000	0.0005	0.0000	0.0017	0.0000	0.0009
NBP[1]121*	0.0000	0.0005	0.0000	0.0017	0.0000	0.0009
NBP[1]147*	0.0000	0.0005	0.0000	0.0018	0.0000	0.0009
NBP[1]171*	0.0000	0.0006	0.0000	0.0027	0.0000	0.0013
NBP[1]195*	0.0000	0.0006	0.0000	0.0026	0.0000	0.0013
NBP[1]222*	0.0000	0.0003	0.0000	0.0013	0.0000	0.0006
NBP[1]248*	0.0000	0.0001	0.0000	0.0007	0.0000	0.0003
NBP[1]273*	0.0000	0.0001	0.0000	0.0004	0.0000	0.0002
NBP[1]299*	0.0000	0.0000	0.0000	0.0002	0.0000	0.0001
NBP[1]325*	0.0000	0.0000	0.0000	0.0001	0.0000	0.0000
NBP[1]351*	0.0000	0.0000	0.0000	0.0000	0.0000	0.0000
NBP[1]377*	0.0000	0.0000	0.0000	0.0000	0.0000	0.0000
NBP[1]402*	0.0000	0.0000	0.0000	0.0000	0.0000	0.0000
NBP[1]428*	0.0000	0.0000	0.0000	0.0000	0.0000	0.0000
NBP[1]454*	0.0000	0.0000	0.0000	0.0000	0.0000	0.0000
NBP[1]480*	0.0000	0.0000	0.0000	0.0000	0.0000	0.0000
NBP[1]505*	0.0000	0.0000	0.0000	0.0000	0.0000	0.0000
NBP[1]531*	0.0000	0.0000	0.0000	0.0000	0.0000	0.0000
NBP[1]557*	0.0000	0.0000	0.0000	0.0000	0.0000	0.0000
NBP[1]582*	0.0000	0.0000	0.0000	0.0000	0.0000	0.0000
NBP[1]608*	0.0000	0.0000	0.0000	0.0000	0.0000	0.0000
NBP[1]634*	0.0000	0.0000	0.0000	0.0000	0.0000	0.0000
NBP[1]659*	0.0000	0.0000	0.0000	0.0000	0.0000	0.0000
NBP[1]685*	0.0000	0.0000	0.0000	0.0000	0.0000	0.0000
NBP[1]711*	0.0000	0.0000	0.0000	0.0000	0.0000	0.0000
NBP[1]736*	0.0000	0.0000	0.0000	0.0000	0.0000	0.0000
NBP[1]762*	0.0000	0.0000	0.0000	0.0000	0.0000	0.0000
NBP[1]788*	0.0000	0.0000	0.0000	0.0000	0.0000	0.0000
NBP[1]825*	0.0000	0.0000	0.0000	0.0000	0.0000	0.0000
NBP[1]873*	0.0000	0.0000	0.0000	0.0000	0.0000	0.0000

* Specified by user.

Material Stream: Pandhi-W (continued)

Fluid Package: Basis-1
Property Package: Peng-Robinson

COMPOSITION

Vapour Phase (continued)

Phase Fraction 0.0000

COMPONENTS	MOLAR FLOW (kgmole/h)	MOLE FRACTION	MASS FLOW (tonne/d)	MASS FRACTION	LIQUID VOLUME FLOW (m3/h)	LIQUID VOLUME FRACTION
NBP[1]926*	0.0000	0.0000	0.0000	0.0000	0.0000	0.0000
NBP[1]978*	0.0000	0.0000	0.0000	0.0000	0.0000	0.0000
NBP[1]1021*	0.0000	0.0000	0.0000	0.0000	0.0000	0.0000
NBP[1]1075*	0.0000	0.0000	0.0000	0.0000	0.0000	0.0000
NBP[1]1123*	0.0000	0.0000	0.0000	0.0000	0.0000	0.0000
NBP[1]1173*	0.0000	0.0000	0.0000	0.0000	0.0000	0.0000
NBP[1]1250*	0.0000	0.0000	0.0000	0.0000	0.0000	0.0000
NBP[1]1339*	0.0000	0.0000	0.0000	0.0000	0.0000	0.0000
NBP[1]1432*	0.0000	0.0000	0.0000	0.0000	0.0000	0.0000
NBP[1]1528*	0.0000	0.0000	0.0000	0.0000	0.0000	0.0000
NBP[1]1637*	0.0000	0.0000	0.0000	0.0000	0.0000	0.0000
NBP[1]1732*	0.0000	0.0000	0.0000	0.0000	0.0000	0.0000
NBP[1]1819*	0.0000	0.0000	0.0000	0.0000	0.0000	0.0000
NBP[1]1913*	0.0000	0.0000	0.0000	0.0023	0.0000	0.0008
Total	0.0000	1.0000	0.0000	1.0000	0.0000	1.0000

Liquid Phase

Phase Fraction 0.0000

COMPONENTS	MOLAR FLOW (kgmole/h)	MOLE FRACTION	MASS FLOW (tonne/d)	MASS FRACTION	LIQUID VOLUME FLOW (m3/h)	LIQUID VOLUME FRACTION
Methane	0.0000	0.1136	0.0000	0.0144	0.0000	0.0364
Ethane	0.0000	0.0644	0.0000	0.0153	0.0000	0.0326
Propane	0.0000	0.0942	0.0000	0.0329	0.0000	0.0490
i-Butane	0.0000	0.0248	0.0000	0.0114	0.0000	0.0154
n-Butane	0.0000	0.0600	0.0000	0.0276	0.0000	0.0357
i-Pentane	0.0000	0.0217	0.0000	0.0124	0.0000	0.0150
n-Pentane	0.0000	0.0278	0.0000	0.0159	0.0000	0.0191
n-Hexane	0.0000	0.0618	0.0000	0.0422	0.0000	0.0481
Nitrogen	0.0000	0.0013	0.0000	0.0003	0.0000	0.0003
CO2	0.0000	0.0134	0.0000	0.0047	0.0000	0.0043
H2S	0.0000	0.0000	0.0000	0.0000	0.0000	0.0000
H2O	0.0000	0.0006	0.0000	0.0001	0.0000	0.0001
NBP[1]95*	0.0000	0.0082	0.0000	0.0044	0.0000	0.0049
NBP[1]121*	0.0000	0.0116	0.0000	0.0067	0.0000	0.0073
NBP[1]147*	0.0000	0.0172	0.0000	0.0109	0.0000	0.0118
NBP[1]171*	0.0000	0.0365	0.0000	0.0253	0.0000	0.0269
NBP[1]195*	0.0000	0.0516	0.0000	0.0382	0.0000	0.0401
NBP[1]222*	0.0000	0.0408	0.0000	0.0325	0.0000	0.0337
NBP[1]248*	0.0000	0.0353	0.0000	0.0302	0.0000	0.0309
NBP[1]273*	0.0000	0.0291	0.0000	0.0266	0.0000	0.0270
NBP[1]299*	0.0000	0.0230	0.0000	0.0225	0.0000	0.0225
NBP[1]325*	0.0000	0.0168	0.0000	0.0175	0.0000	0.0173
NBP[1]351*	0.0000	0.0137	0.0000	0.0151	0.0000	0.0148
NBP[1]377*	0.0000	0.0126	0.0000	0.0148	0.0000	0.0144
NBP[1]402*	0.0000	0.0116	0.0000	0.0145	0.0000	0.0139
NBP[1]428*	0.0000	0.0110	0.0000	0.0147	0.0000	0.0140
NBP[1]454*	0.0000	0.0110	0.0000	0.0157	0.0000	0.0148
NBP[1]480*	0.0000	0.0111	0.0000	0.0170	0.0000	0.0159
NBP[1]505*	0.0000	0.0108	0.0000	0.0176	0.0000	0.0162
NBP[1]531*	0.0000	0.0104	0.0000	0.0180	0.0000	0.0165
NBP[1]557*	0.0000	0.0100	0.0000	0.0185	0.0000	0.0168
NBP[1]582*	0.0000	0.0096	0.0000	0.0188	0.0000	0.0169
NBP[1]608*	0.0000	0.0092	0.0000	0.0192	0.0000	0.0171
NBP[1]634*	0.0000	0.0090	0.0000	0.0199	0.0000	0.0177
NBP[1]659*	0.0000	0.0089	0.0000	0.0207	0.0000	0.0182

* Specified by user.

Material Stream: Pandhi-W (continued)

Fluid Package: Basis-1
Property Package: Peng-Robinson

COMPOSITION

Liquid Phase (continued)

Phase Fraction 0.0000

COMPONENTS	MOLAR FLOW (kgmole/h)	MOLE FRACTION	MASS FLOW (tonne/d)	MASS FRACTION	LIQUID VOLUME FLOW (m3/h)	LIQUID VOLUME FRACTION
NBP[1]685*	0.0000	0.0092	0.0000	0.0227	0.0000	0.0198
NBP[1]711*	0.0000	0.0096	0.0000	0.0249	0.0000	0.0216
NBP[1]736*	0.0000	0.0095	0.0000	0.0258	0.0000	0.0221
NBP[1]762*	0.0000	0.0093	0.0000	0.0263	0.0000	0.0225
NBP[1]788*	0.0000	0.0089	0.0000	0.0267	0.0000	0.0226
NBP[1]825*	0.0000	0.0149	0.0000	0.0481	0.0000	0.0404
NBP[1]873*	0.0000	0.0103	0.0000	0.0359	0.0000	0.0298
NBP[1]926*	0.0000	0.0081	0.0000	0.0305	0.0000	0.0250
NBP[1]978*	0.0000	0.0083	0.0000	0.0343	0.0000	0.0277
NBP[1]1021*	0.0000	0.0041	0.0000	0.0179	0.0000	0.0143
NBP[1]1075*	0.0000	0.0025	0.0000	0.0117	0.0000	0.0093
NBP[1]1123*	0.0000	0.0023	0.0000	0.0116	0.0000	0.0091
NBP[1]1173*	0.0000	0.0017	0.0000	0.0088	0.0000	0.0069
NBP[1]1250*	0.0000	0.0022	0.0000	0.0125	0.0000	0.0096
NBP[1]1339*	0.0000	0.0020	0.0000	0.0130	0.0000	0.0098
NBP[1]1432*	0.0000	0.0014	0.0000	0.0100	0.0000	0.0074
NBP[1]1528*	0.0000	0.0010	0.0000	0.0076	0.0000	0.0055
NBP[1]1637*	0.0000	0.0007	0.0000	0.0056	0.0000	0.0041
NBP[1]1732*	0.0000	0.0006	0.0000	0.0048	0.0000	0.0034
NBP[1]1819*	0.0000	0.0005	0.0000	0.0047	0.0000	0.0034
NBP[1]1913*	0.0000	0.0000	0.0000	0.0000	0.0000	0.0000
Total	0.0000	1.0000	0.0000	1.0000	0.0000	1.0000

Aqueous Phase

Phase Fraction 1.000

COMPONENTS	MOLAR FLOW (kgmole/h)	MOLE FRACTION	MASS FLOW (tonne/d)	MASS FRACTION	LIQUID VOLUME FLOW (m3/h)	LIQUID VOLUME FRACTION
Methane	0.0000	0.0000	0.0000	0.0000	0.0000	0.0000
Ethane	0.0000	0.0000	0.0000	0.0000	0.0000	0.0000
Propane	0.0000	0.0000	0.0000	0.0000	0.0000	0.0000
i-Butane	0.0000	0.0000	0.0000	0.0000	0.0000	0.0000
n-Butane	0.0000	0.0000	0.0000	0.0000	0.0000	0.0000
i-Pentane	0.0000	0.0000	0.0000	0.0000	0.0000	0.0000
n-Pentane	0.0000	0.0000	0.0000	0.0000	0.0000	0.0000
n-Hexane	0.0000	0.0000	0.0000	0.0000	0.0000	0.0000
Nitrogen	0.0008	0.0000	0.0006	0.0000	0.0000	0.0000
CO2	0.0423	0.0004	0.0446	0.0010	0.0023	0.0012
H2S	0.0000	0.0000	0.0000	0.0000	0.0000	0.0000
H2O	106.2938	0.9996	45.9575	0.9990	1.9188	0.9988
NBP[1]95*	0.0000	0.0000	0.0000	0.0000	0.0000	0.0000
NBP[1]121*	0.0000	0.0000	0.0000	0.0000	0.0000	0.0000
NBP[1]147*	0.0000	0.0000	0.0000	0.0000	0.0000	0.0000
NBP[1]171*	0.0000	0.0000	0.0000	0.0000	0.0000	0.0000
NBP[1]195*	0.0000	0.0000	0.0000	0.0000	0.0000	0.0000
NBP[1]222*	0.0000	0.0000	0.0000	0.0000	0.0000	0.0000
NBP[1]248*	0.0000	0.0000	0.0000	0.0000	0.0000	0.0000
NBP[1]273*	0.0000	0.0000	0.0000	0.0000	0.0000	0.0000
NBP[1]299*	0.0000	0.0000	0.0000	0.0000	0.0000	0.0000
NBP[1]325*	0.0000	0.0000	0.0000	0.0000	0.0000	0.0000
NBP[1]351*	0.0000	0.0000	0.0000	0.0000	0.0000	0.0000
NBP[1]377*	0.0000	0.0000	0.0000	0.0000	0.0000	0.0000
NBP[1]402*	0.0000	0.0000	0.0000	0.0000	0.0000	0.0000
NBP[1]428*	0.0000	0.0000	0.0000	0.0000	0.0000	0.0000
NBP[1]454*	0.0000	0.0000	0.0000	0.0000	0.0000	0.0000
NBP[1]480*	0.0000	0.0000	0.0000	0.0000	0.0000	0.0000

* Specified by user.

Material Stream: Pandhi-W (continued)

Fluid Package: Basis-1
Property Package: Peng-Robinson

COMPOSITION

Aqueous Phase (continued)

Phase Fraction 1.000

COMPONENTS	MOLAR FLOW (kgmole/h)	MOLE FRACTION	MASS FLOW (tonne/d)	MASS FRACTION	LIQUID VOLUME FLOW (m3/h)	LIQUID VOLUME FRACTION
NBP[1]505*	0.0000	0.0000	0.0000	0.0000	0.0000	0.0000
NBP[1]531*	0.0000	0.0000	0.0000	0.0000	0.0000	0.0000
NBP[1]557*	0.0000	0.0000	0.0000	0.0000	0.0000	0.0000
NBP[1]582*	0.0000	0.0000	0.0000	0.0000	0.0000	0.0000
NBP[1]608*	0.0000	0.0000	0.0000	0.0000	0.0000	0.0000
NBP[1]634*	0.0000	0.0000	0.0000	0.0000	0.0000	0.0000
NBP[1]659*	0.0000	0.0000	0.0000	0.0000	0.0000	0.0000
NBP[1]685*	0.0000	0.0000	0.0000	0.0000	0.0000	0.0000
NBP[1]711*	0.0000	0.0000	0.0000	0.0000	0.0000	0.0000
NBP[1]736*	0.0000	0.0000	0.0000	0.0000	0.0000	0.0000
NBP[1]762*	0.0000	0.0000	0.0000	0.0000	0.0000	0.0000
NBP[1]788*	0.0000	0.0000	0.0000	0.0000	0.0000	0.0000
NBP[1]825*	0.0000	0.0000	0.0000	0.0000	0.0000	0.0000
NBP[1]873*	0.0000	0.0000	0.0000	0.0000	0.0000	0.0000
NBP[1]926*	0.0000	0.0000	0.0000	0.0000	0.0000	0.0000
NBP[1]978*	0.0000	0.0000	0.0000	0.0000	0.0000	0.0000
NBP[1]1021*	0.0000	0.0000	0.0000	0.0000	0.0000	0.0000
NBP[1]1075*	0.0000	0.0000	0.0000	0.0000	0.0000	0.0000
NBP[1]1123*	0.0000	0.0000	0.0000	0.0000	0.0000	0.0000
NBP[1]1173*	0.0000	0.0000	0.0000	0.0000	0.0000	0.0000
NBP[1]1250*	0.0000	0.0000	0.0000	0.0000	0.0000	0.0000
NBP[1]1339*	0.0000	0.0000	0.0000	0.0000	0.0000	0.0000
NBP[1]1432*	0.0000	0.0000	0.0000	0.0000	0.0000	0.0000
NBP[1]1528*	0.0000	0.0000	0.0000	0.0000	0.0000	0.0000
NBP[1]1637*	0.0000	0.0000	0.0000	0.0000	0.0000	0.0000
NBP[1]1732*	0.0000	0.0000	0.0000	0.0000	0.0000	0.0000
NBP[1]1819*	0.0000	0.0000	0.0000	0.0000	0.0000	0.0000
NBP[1]1913*	0.0000	0.0000	0.0000	0.0000	0.0000	0.0000
Total	106.3369	1.0000	46.0026	1.0000	1.9210	1.0000

Material Stream: Pandhi-Water-

Fluid Package: Basis-1
Property Package: Peng-Robinson

CONDITIONS

		Overall	Vapour Phase	Liquid Phase	Aqueous Phase
Vapour / Phase Fraction		0.0000	0.0000	0.0000	1.0000
Temperature:	(F)	179.9	179.9	179.9	179.9
Pressure:	(psig)	1235	1235	1235	1235
Molar Flow	(MMSCFD)	2.099	0.0000	0.0000	2.099
Mass Flow	(tonne/d)	45.22	0.0000	0.0000	45.22
Std Ideal Liq Vol Flow	(barrel/day)	285.1	0.0000	0.0000	285.1
Molar Enthalpy	(kJ/kgmole)	-2.817e+005	-9.019e+004	-2.936e+005	-2.817e+005
Molar Entropy	(kJ/kgmole-C)	67.27	156.9	297.9	67.27
Heat Flow	(MMBtu/hr)	-27.90	0.0000	0.0000	-27.90
Liq Vol Flow @Std Cond	(barrel/day)	280.2 *	0.0000	0.0000	280.2

PROPERTIES

		Overall	Vapour Phase	Liquid Phase	Aqueous Phase
Molecular Weight		18.03	22.43	134.7	18.03
Molar Density	(kgmole/m3)	53.60	3.442	5.463	53.60
Mass Density	(kg/m3)	966.2	77.20	735.6	966.2
Act. Volume Flow	(barrel/day)	294.4	0.0000	0.0000	294.4
Mass Enthalpy	(kJ/kg)	-1.563e+004	-4020	-2181	-1.563e+004
Mass Entropy	(kJ/kg-C)	3.732	6.994	2.212	3.732

* Specified by user.

Material Stream: Pandhi-Water- (continued)

Fluid Package: Basis-1
Property Package: Peng-Robinson

PROPERTIES

		Overall	Vapour Phase	Liquid Phase	Aqueous Phase
Heat Capacity	(kJ/kgmole-C)	78.26	58.39	299.7	78.26
Mass Heat Capacity	(kJ/kg-C)	4.342	2.603	2.226	4.342
LHV Molar Basis (Std)	(Btu/SCF)	5.036e-003	---	---	5.036e-003
LHV Mass Basis (Std)	(kJ/kg)	0.2466	---	---	0.2466
Phase Fraction [Vol. Basis]		---	---	---	1.000
Phase Fraction [Mass Basis]		0.0000	0.0000	0.0000	1.000
Partial Pressure of CO2	(psig)	-14.70	---	---	---
Cost Based on Flow	(Cost/s)	0.0000	0.0000	0.0000	0.0000
Act. Gas Flow	(ACT_m3/h)	---	---	---	---
Avg. Liq. Density	(kgmole/m3)	55.35	16.60	5.708	55.35
Specific Heat	(kJ/kgmole-C)	78.26	58.39	299.7	78.26
Std. Gas Flow	(STD_m3/h)	2471	0.0000	0.0000	2471
Std. Ideal Liq. Mass Density	(kg/m3)	997.8	372.3	768.7	997.8
Act. Liq. Flow	(barrel/day)	294.4	---	---	294.4
Z Factor		---	0.8474	0.5339	5.441e-002
Watson K		8.528	16.94	11.89	8.528
User Property		---	---	---	---
Partial Pressure of H2S	(psig)	-14.70	---	---	---
Cp/(Cp - R)		1.119	1.166	1.029	1.119
Cp/Cv		1.166	1.465	1.221	1.166
Heat of Vap.	(kJ/kgmole)	2.627e+004	---	---	---
Kinematic Viscosity	(cSt)	0.3537	0.2016	0.9907	0.3537
Liq. Mass Density (Std. Cond)	(kg/m3)	1015	0.9529	800.0	1015
Liq. Vol. Flow (Std. Cond)	(barrel/day)	280.2	0.0000	0.0000	280.2
Liquid Fraction		1.000	0.0000	1.000	1.000
Molar Volume	(m3/kgmole)	1.866e-002	0.2906	0.1831	1.866e-002
Mass Heat of Vap.	(kJ/kg)	1457	---	---	---
Phase Fraction [Molar Basis]		0.0000	0.0000	0.0000	1.0000
Surface Tension	(dyne/cm)	61.91	---	12.00	61.91
Thermal Conductivity	(W/m-K)	0.6712	4.456e-002	9.065e-002	0.6712
Viscosity	(cP)	0.3417	1.556e-002	0.7288	0.3417
Cv (Semi-Ideal)	(kJ/kgmole-C)	69.95	50.08	291.4	69.95
Mass Cv (Semi-Ideal)	(kJ/kg-C)	3.880	2.232	2.164	3.880
Cv	(kJ/kgmole-C)	67.10	39.85	245.4	67.10
Mass Cv	(kJ/kg-C)	3.722	1.777	1.823	3.722
Cv (Ent. Method)	(kJ/kgmole-C)	64.64	---	259.5	64.64
Mass Cv (Ent. Method)	(kJ/kg-C)	3.586	---	1.927	3.586
Cp/Cv (Ent. Method)		1.211	---	1.155	1.211
Reid VP at 37.8 C	(psig)	---	---	151.1	---
True VP at 37.8 C	(psig)	---	---	970.9	---
Liq. Vol. Flow - Sum(Std. Cond)	(barrel/day)	280.2	0.0000	0.0000	280.2
HHV Molar Basis (Std)	(Btu/SCF)	46.45	---	---	46.45
HHV Mass Basis (Std)	(kJ/kg)	2274	---	---	2274
CO2 Loading		---	---	---	---
CO2 App ML Con	(kgmole/m3)	2.239e-002	---	---	2.239e-002
CO2 App WT Con	(kgmol/kg)	2.318e-005	---	---	2.318e-005
Phase Fraction [Act. Vol. Basis]		0.0000	0.0000	0.0000	1.000
Mass Exergy	(kJ/kg)	31.10	---	---	---
Viscosity Index		-17.30	---	---	---
Ideal Gas Cp/Cv		1.324	1.215	1.035	1.324
Ideal Gas Cp	(kJ/kgmole-C)	33.95	46.90	244.8	33.95
Mass Ideal Gas Cp	(kJ/kg-C)	1.884	2.091	1.818	1.884
Bubble Point Pressure	(psig)	822.2	---	---	---

* Specified by user.

Material Stream: Pandhi-Water- (continued)

Fluid Package: Basis-1
Property Package: Peng-Robinson

COMPOSITION

Overall Phase

Vapour Fraction 0.0000

COMPONENTS	MOLAR FLOW (kgmole/h)	MOLE FRACTION	MASS FLOW (tonne/d)	MASS FRACTION	LIQUID VOLUME FLOW (m3/h)	LIQUID VOLUME FRACTION
Methane	0.0006	0.0000	0.0002	0.0000	0.0000	0.0000
Ethane	0.0000	0.0000	0.0000	0.0000	0.0000	0.0000
Propane	0.0000	0.0000	0.0000	0.0000	0.0000	0.0000
i-Butane	0.0000	0.0000	0.0000	0.0000	0.0000	0.0000
n-Butane	0.0000	0.0000	0.0000	0.0000	0.0000	0.0000
i-Pentane	0.0000	0.0000	0.0000	0.0000	0.0000	0.0000
n-Pentane	0.0000	0.0000	0.0000	0.0000	0.0000	0.0000
n-Hexane	0.0000	0.0000	0.0000	0.0000	0.0000	0.0000
Nitrogen	0.0015	0.0000	0.0010	0.0000	0.0001	0.0000
CO2	0.0437	0.0004	0.0461	0.0010	0.0023	0.0012
H2S	0.0000	0.0000	0.0000	0.0000	0.0000	0.0000
H2O	104.4773	0.9996	45.1721	0.9990	1.8860	0.9987
NBP[1]95*	0.0000	0.0000	0.0000	0.0000	0.0000	0.0000
NBP[1]121*	0.0000	0.0000	0.0000	0.0000	0.0000	0.0000
NBP[1]147*	0.0000	0.0000	0.0000	0.0000	0.0000	0.0000
NBP[1]171*	0.0000	0.0000	0.0000	0.0000	0.0000	0.0000
NBP[1]195*	0.0000	0.0000	0.0000	0.0000	0.0000	0.0000
NBP[1]222*	0.0000	0.0000	0.0000	0.0000	0.0000	0.0000
NBP[1]248*	0.0000	0.0000	0.0000	0.0000	0.0000	0.0000
NBP[1]273*	0.0000	0.0000	0.0000	0.0000	0.0000	0.0000
NBP[1]299*	0.0000	0.0000	0.0000	0.0000	0.0000	0.0000
NBP[1]325*	0.0000	0.0000	0.0000	0.0000	0.0000	0.0000
NBP[1]351*	0.0000	0.0000	0.0000	0.0000	0.0000	0.0000
NBP[1]377*	0.0000	0.0000	0.0000	0.0000	0.0000	0.0000
NBP[1]402*	0.0000	0.0000	0.0000	0.0000	0.0000	0.0000
NBP[1]428*	0.0000	0.0000	0.0000	0.0000	0.0000	0.0000
NBP[1]454*	0.0000	0.0000	0.0000	0.0000	0.0000	0.0000
NBP[1]480*	0.0000	0.0000	0.0000	0.0000	0.0000	0.0000
NBP[1]505*	0.0000	0.0000	0.0000	0.0000	0.0000	0.0000
NBP[1]531*	0.0000	0.0000	0.0000	0.0000	0.0000	0.0000
NBP[1]557*	0.0000	0.0000	0.0000	0.0000	0.0000	0.0000
NBP[1]582*	0.0000	0.0000	0.0000	0.0000	0.0000	0.0000
NBP[1]608*	0.0000	0.0000	0.0000	0.0000	0.0000	0.0000
NBP[1]634*	0.0000	0.0000	0.0000	0.0000	0.0000	0.0000
NBP[1]659*	0.0000	0.0000	0.0000	0.0000	0.0000	0.0000
NBP[1]685*	0.0000	0.0000	0.0000	0.0000	0.0000	0.0000
NBP[1]711*	0.0000	0.0000	0.0000	0.0000	0.0000	0.0000
NBP[1]736*	0.0000	0.0000	0.0000	0.0000	0.0000	0.0000
NBP[1]762*	0.0000	0.0000	0.0000	0.0000	0.0000	0.0000
NBP[1]788*	0.0000	0.0000	0.0000	0.0000	0.0000	0.0000
NBP[1]825*	0.0000	0.0000	0.0000	0.0000	0.0000	0.0000
NBP[1]873*	0.0000	0.0000	0.0000	0.0000	0.0000	0.0000
NBP[1]926*	0.0000	0.0000	0.0000	0.0000	0.0000	0.0000
NBP[1]978*	0.0000	0.0000	0.0000	0.0000	0.0000	0.0000
NBP[1]1021*	0.0000	0.0000	0.0000	0.0000	0.0000	0.0000
NBP[1]1075*	0.0000	0.0000	0.0000	0.0000	0.0000	0.0000
NBP[1]1123*	0.0000	0.0000	0.0000	0.0000	0.0000	0.0000
NBP[1]1173*	0.0000	0.0000	0.0000	0.0000	0.0000	0.0000
NBP[1]1250*	0.0000	0.0000	0.0000	0.0000	0.0000	0.0000
NBP[1]1339*	0.0000	0.0000	0.0000	0.0000	0.0000	0.0000
NBP[1]1432*	0.0000	0.0000	0.0000	0.0000	0.0000	0.0000
NBP[1]1528*	0.0000	0.0000	0.0000	0.0000	0.0000	0.0000
NBP[1]1637*	0.0000	0.0000	0.0000	0.0000	0.0000	0.0000
NBP[1]1732*	0.0000	0.0000	0.0000	0.0000	0.0000	0.0000

* Specified by user.

Material Stream: Pandhi-Water- (continued)

Fluid Package: Basis-1
Property Package: Peng-Robinson

COMPOSITION

Overall Phase (continued)

Vapour Fraction 0.0000

COMPONENTS	MOLAR FLOW (kgmole/h)	MOLE FRACTION	MASS FLOW (tonne/d)	MASS FRACTION	LIQUID VOLUME FLOW (m3/h)	LIQUID VOLUME FRACTION
NBP[1]1819*	0.0000	0.0000	0.0000	0.0000	0.0000	0.0000
NBP[1]1913*	0.0000	0.0000	0.0000	0.0000	0.0000	0.0000
Total	104.5231	1.0000	45.2194	1.0000	1.8884	1.0000

Vapour Phase

Phase Fraction 0.0000

COMPONENTS	MOLAR FLOW (kgmole/h)	MOLE FRACTION	MASS FLOW (tonne/d)	MASS FRACTION	LIQUID VOLUME FLOW (m3/h)	LIQUID VOLUME FRACTION
Methane	0.0000	0.7455	0.0000	0.5332	0.0000	0.6631
Ethane	0.0000	0.1016	0.0000	0.1362	0.0000	0.1426
Propane	0.0000	0.0521	0.0000	0.1025	0.0000	0.0753
i-Butane	0.0000	0.0066	0.0000	0.0172	0.0000	0.0114
n-Butane	0.0000	0.0127	0.0000	0.0329	0.0000	0.0210
i-Pentane	0.0000	0.0025	0.0000	0.0081	0.0000	0.0049
n-Pentane	0.0000	0.0028	0.0000	0.0089	0.0000	0.0053
n-Hexane	0.0000	0.0036	0.0000	0.0138	0.0000	0.0077
Nitrogen	0.0000	0.0203	0.0000	0.0253	0.0000	0.0117
CO2	0.0000	0.0333	0.0000	0.0654	0.0000	0.0295
H2S	0.0000	0.0000	0.0000	0.0000	0.0000	0.0000
H2O	0.0000	0.0079	0.0000	0.0063	0.0000	0.0024
NBP[1]95*	0.0000	0.0008	0.0000	0.0025	0.0000	0.0014
NBP[1]121*	0.0000	0.0009	0.0000	0.0030	0.0000	0.0016
NBP[1]147*	0.0000	0.0011	0.0000	0.0039	0.0000	0.0021
NBP[1]171*	0.0000	0.0019	0.0000	0.0074	0.0000	0.0039
NBP[1]195*	0.0000	0.0022	0.0000	0.0092	0.0000	0.0048
NBP[1]222*	0.0000	0.0014	0.0000	0.0063	0.0000	0.0032
NBP[1]248*	0.0000	0.0010	0.0000	0.0047	0.0000	0.0024
NBP[1]273*	0.0000	0.0006	0.0000	0.0033	0.0000	0.0017
NBP[1]299*	0.0000	0.0004	0.0000	0.0022	0.0000	0.0011
NBP[1]325*	0.0000	0.0002	0.0000	0.0013	0.0000	0.0006
NBP[1]351*	0.0000	0.0001	0.0000	0.0008	0.0000	0.0004
NBP[1]377*	0.0000	0.0001	0.0000	0.0006	0.0000	0.0003
NBP[1]402*	0.0000	0.0001	0.0000	0.0004	0.0000	0.0002
NBP[1]428*	0.0000	0.0000	0.0000	0.0003	0.0000	0.0001
NBP[1]454*	0.0000	0.0000	0.0000	0.0002	0.0000	0.0001
NBP[1]480*	0.0000	0.0000	0.0000	0.0001	0.0000	0.0001
NBP[1]505*	0.0000	0.0000	0.0000	0.0001	0.0000	0.0000
NBP[1]531*	0.0000	0.0000	0.0000	0.0001	0.0000	0.0000
NBP[1]557*	0.0000	0.0000	0.0000	0.0000	0.0000	0.0000
NBP[1]582*	0.0000	0.0000	0.0000	0.0000	0.0000	0.0000
NBP[1]608*	0.0000	0.0000	0.0000	0.0000	0.0000	0.0000
NBP[1]634*	0.0000	0.0000	0.0000	0.0000	0.0000	0.0000
NBP[1]659*	0.0000	0.0000	0.0000	0.0000	0.0000	0.0000
NBP[1]685*	0.0000	0.0000	0.0000	0.0000	0.0000	0.0000
NBP[1]711*	0.0000	0.0000	0.0000	0.0000	0.0000	0.0000
NBP[1]736*	0.0000	0.0000	0.0000	0.0000	0.0000	0.0000
NBP[1]762*	0.0000	0.0000	0.0000	0.0000	0.0000	0.0000
NBP[1]788*	0.0000	0.0000	0.0000	0.0000	0.0000	0.0000
NBP[1]825*	0.0000	0.0000	0.0000	0.0000	0.0000	0.0000
NBP[1]873*	0.0000	0.0000	0.0000	0.0000	0.0000	0.0000
NBP[1]926*	0.0000	0.0000	0.0000	0.0000	0.0000	0.0000
NBP[1]978*	0.0000	0.0000	0.0000	0.0000	0.0000	0.0000
NBP[1]1021*	0.0000	0.0000	0.0000	0.0000	0.0000	0.0000
NBP[1]1075*	0.0000	0.0000	0.0000	0.0000	0.0000	0.0000
NBP[1]1123*	0.0000	0.0000	0.0000	0.0000	0.0000	0.0000

* Specified by user.

Material Stream: Pandhi-Water- (continued)

Fluid Package: Basis-1
Property Package: Peng-Robinson

COMPOSITION

Vapour Phase (continued)

Phase Fraction 0.0000

COMPONENTS	MOLAR FLOW (kgmole/h)	MOLE FRACTION	MASS FLOW (tonne/d)	MASS FRACTION	LIQUID VOLUME FLOW (m3/h)	LIQUID VOLUME FRACTION
NBP[1]1173*	0.0000	0.0000	0.0000	0.0000	0.0000	0.0000
NBP[1]1250*	0.0000	0.0000	0.0000	0.0000	0.0000	0.0000
NBP[1]1339*	0.0000	0.0000	0.0000	0.0000	0.0000	0.0000
NBP[1]1432*	0.0000	0.0000	0.0000	0.0000	0.0000	0.0000
NBP[1]1528*	0.0000	0.0000	0.0000	0.0000	0.0000	0.0000
NBP[1]1637*	0.0000	0.0000	0.0000	0.0000	0.0000	0.0000
NBP[1]1732*	0.0000	0.0000	0.0000	0.0000	0.0000	0.0000
NBP[1]1819*	0.0000	0.0000	0.0000	0.0017	0.0000	0.0006
NBP[1]1913*	0.0000	0.0000	0.0000	0.0021	0.0000	0.0007
Total	0.0000	1.0000	0.0000	1.0000	0.0000	1.0000

Liquid Phase

Phase Fraction 0.0000

COMPONENTS	MOLAR FLOW (kgmole/h)	MOLE FRACTION	MASS FLOW (tonne/d)	MASS FRACTION	LIQUID VOLUME FLOW (m3/h)	LIQUID VOLUME FRACTION
Methane	0.0000	0.2133	0.0000	0.0254	0.0000	0.0653
Ethane	0.0000	0.0711	0.0000	0.0159	0.0000	0.0343
Propane	0.0000	0.0717	0.0000	0.0235	0.0000	0.0356
i-Butane	0.0000	0.0151	0.0000	0.0065	0.0000	0.0089
n-Butane	0.0000	0.0345	0.0000	0.0149	0.0000	0.0196
i-Pentane	0.0000	0.0114	0.0000	0.0061	0.0000	0.0075
n-Pentane	0.0000	0.0144	0.0000	0.0077	0.0000	0.0094
n-Hexane	0.0000	0.0352	0.0000	0.0225	0.0000	0.0261
Nitrogen	0.0000	0.0033	0.0000	0.0007	0.0000	0.0007
CO2	0.0000	0.0179	0.0000	0.0058	0.0000	0.0054
H2S	0.0000	0.0000	0.0000	0.0000	0.0000	0.0000
H2O	0.0000	0.0046	0.0000	0.0006	0.0000	0.0005
NBP[1]95*	0.0000	0.0044	0.0000	0.0022	0.0000	0.0025
NBP[1]121*	0.0000	0.0062	0.0000	0.0034	0.0000	0.0038
NBP[1]147*	0.0000	0.0097	0.0000	0.0058	0.0000	0.0063
NBP[1]171*	0.0000	0.0219	0.0000	0.0143	0.0000	0.0154
NBP[1]195*	0.0000	0.0337	0.0000	0.0234	0.0000	0.0250
NBP[1]222*	0.0000	0.0298	0.0000	0.0223	0.0000	0.0235
NBP[1]248*	0.0000	0.0285	0.0000	0.0229	0.0000	0.0239
NBP[1]273*	0.0000	0.0259	0.0000	0.0222	0.0000	0.0229
NBP[1]299*	0.0000	0.0223	0.0000	0.0204	0.0000	0.0208
NBP[1]325*	0.0000	0.0175	0.0000	0.0170	0.0000	0.0172
NBP[1]351*	0.0000	0.0151	0.0000	0.0156	0.0000	0.0156
NBP[1]377*	0.0000	0.0145	0.0000	0.0160	0.0000	0.0158
NBP[1]402*	0.0000	0.0138	0.0000	0.0162	0.0000	0.0159
NBP[1]428*	0.0000	0.0134	0.0000	0.0169	0.0000	0.0163
NBP[1]454*	0.0000	0.0136	0.0000	0.0183	0.0000	0.0175
NBP[1]480*	0.0000	0.0140	0.0000	0.0200	0.0000	0.0190
NBP[1]505*	0.0000	0.0136	0.0000	0.0208	0.0000	0.0196
NBP[1]531*	0.0000	0.0132	0.0000	0.0215	0.0000	0.0200
NBP[1]557*	0.0000	0.0128	0.0000	0.0221	0.0000	0.0204
NBP[1]582*	0.0000	0.0122	0.0000	0.0225	0.0000	0.0206
NBP[1]608*	0.0000	0.0118	0.0000	0.0230	0.0000	0.0209
NBP[1]634*	0.0000	0.0116	0.0000	0.0239	0.0000	0.0215
NBP[1]659*	0.0000	0.0114	0.0000	0.0249	0.0000	0.0223
NBP[1]685*	0.0000	0.0118	0.0000	0.0272	0.0000	0.0241
NBP[1]711*	0.0000	0.0123	0.0000	0.0299	0.0000	0.0263
NBP[1]736*	0.0000	0.0122	0.0000	0.0309	0.0000	0.0270
NBP[1]762*	0.0000	0.0119	0.0000	0.0316	0.0000	0.0274
NBP[1]788*	0.0000	0.0114	0.0000	0.0321	0.0000	0.0276

* Specified by user.

Material Stream: Pandhi-Water- (continued)

Fluid Package: Basis-1
Property Package: Peng-Robinson

COMPOSITION

Liquid Phase (continued)

Phase Fraction 0.0000

COMPONENTS	MOLAR FLOW (kgmole/h)	MOLE FRACTION	MASS FLOW (tonne/d)	MASS FRACTION	LIQUID VOLUME FLOW (m3/h)	LIQUID VOLUME FRACTION
NBP[1]825*	0.0000	0.0191	0.0000	0.0577	0.0000	0.0493
NBP[1]873*	0.0000	0.0132	0.0000	0.0432	0.0000	0.0364
NBP[1]926*	0.0000	0.0103	0.0000	0.0366	0.0000	0.0305
NBP[1]978*	0.0000	0.0106	0.0000	0.0412	0.0000	0.0338
NBP[1]1021*	0.0000	0.0052	0.0000	0.0215	0.0000	0.0175
NBP[1]1075*	0.0000	0.0032	0.0000	0.0140	0.0000	0.0113
NBP[1]1123*	0.0000	0.0030	0.0000	0.0139	0.0000	0.0111
NBP[1]1173*	0.0000	0.0022	0.0000	0.0106	0.0000	0.0084
NBP[1]1250*	0.0000	0.0028	0.0000	0.0150	0.0000	0.0118
NBP[1]1339*	0.0000	0.0026	0.0000	0.0156	0.0000	0.0120
NBP[1]1432*	0.0000	0.0018	0.0000	0.0120	0.0000	0.0091
NBP[1]1528*	0.0000	0.0013	0.0000	0.0091	0.0000	0.0068
NBP[1]1637*	0.0000	0.0009	0.0000	0.0068	0.0000	0.0050
NBP[1]1732*	0.0000	0.0007	0.0000	0.0057	0.0000	0.0042
NBP[1]1819*	0.0000	0.0000	0.0000	0.0001	0.0000	0.0001
NBP[1]1913*	0.0000	0.0000	0.0000	0.0000	0.0000	0.0000
Total	0.0000	1.0000	0.0000	1.0000	0.0000	1.0000

Aqueous Phase

Phase Fraction 1.000

COMPONENTS	MOLAR FLOW (kgmole/h)	MOLE FRACTION	MASS FLOW (tonne/d)	MASS FRACTION	LIQUID VOLUME FLOW (m3/h)	LIQUID VOLUME FRACTION
Methane	0.0006	0.0000	0.0002	0.0000	0.0000	0.0000
Ethane	0.0000	0.0000	0.0000	0.0000	0.0000	0.0000
Propane	0.0000	0.0000	0.0000	0.0000	0.0000	0.0000
i-Butane	0.0000	0.0000	0.0000	0.0000	0.0000	0.0000
n-Butane	0.0000	0.0000	0.0000	0.0000	0.0000	0.0000
i-Pentane	0.0000	0.0000	0.0000	0.0000	0.0000	0.0000
n-Pentane	0.0000	0.0000	0.0000	0.0000	0.0000	0.0000
n-Hexane	0.0000	0.0000	0.0000	0.0000	0.0000	0.0000
Nitrogen	0.0015	0.0000	0.0010	0.0000	0.0001	0.0000
CO2	0.0437	0.0004	0.0461	0.0010	0.0023	0.0012
H2S	0.0000	0.0000	0.0000	0.0000	0.0000	0.0000
H2O	104.4773	0.9996	45.1721	0.9990	1.8860	0.9987
NBP[1]95*	0.0000	0.0000	0.0000	0.0000	0.0000	0.0000
NBP[1]121*	0.0000	0.0000	0.0000	0.0000	0.0000	0.0000
NBP[1]147*	0.0000	0.0000	0.0000	0.0000	0.0000	0.0000
NBP[1]171*	0.0000	0.0000	0.0000	0.0000	0.0000	0.0000
NBP[1]195*	0.0000	0.0000	0.0000	0.0000	0.0000	0.0000
NBP[1]222*	0.0000	0.0000	0.0000	0.0000	0.0000	0.0000
NBP[1]248*	0.0000	0.0000	0.0000	0.0000	0.0000	0.0000
NBP[1]273*	0.0000	0.0000	0.0000	0.0000	0.0000	0.0000
NBP[1]299*	0.0000	0.0000	0.0000	0.0000	0.0000	0.0000
NBP[1]325*	0.0000	0.0000	0.0000	0.0000	0.0000	0.0000
NBP[1]351*	0.0000	0.0000	0.0000	0.0000	0.0000	0.0000
NBP[1]377*	0.0000	0.0000	0.0000	0.0000	0.0000	0.0000
NBP[1]402*	0.0000	0.0000	0.0000	0.0000	0.0000	0.0000
NBP[1]428*	0.0000	0.0000	0.0000	0.0000	0.0000	0.0000
NBP[1]454*	0.0000	0.0000	0.0000	0.0000	0.0000	0.0000
NBP[1]480*	0.0000	0.0000	0.0000	0.0000	0.0000	0.0000
NBP[1]505*	0.0000	0.0000	0.0000	0.0000	0.0000	0.0000
NBP[1]531*	0.0000	0.0000	0.0000	0.0000	0.0000	0.0000
NBP[1]557*	0.0000	0.0000	0.0000	0.0000	0.0000	0.0000
NBP[1]582*	0.0000	0.0000	0.0000	0.0000	0.0000	0.0000
NBP[1]608*	0.0000	0.0000	0.0000	0.0000	0.0000	0.0000

* Specified by user.

Material Stream: Pandhi-Water- (continued)

Fluid Package: Basis-1
Property Package: Peng-Robinson

COMPOSITION

Aqueous Phase (continued)

Phase Fraction 1.000

COMPONENTS	MOLAR FLOW (kgmole/h)	MOLE FRACTION	MASS FLOW (tonne/d)	MASS FRACTION	LIQUID VOLUME FLOW (m3/h)	LIQUID VOLUME FRACTION
NBP[1]634*	0.0000	0.0000	0.0000	0.0000	0.0000	0.0000
NBP[1]659*	0.0000	0.0000	0.0000	0.0000	0.0000	0.0000
NBP[1]685*	0.0000	0.0000	0.0000	0.0000	0.0000	0.0000
NBP[1]711*	0.0000	0.0000	0.0000	0.0000	0.0000	0.0000
NBP[1]736*	0.0000	0.0000	0.0000	0.0000	0.0000	0.0000
NBP[1]762*	0.0000	0.0000	0.0000	0.0000	0.0000	0.0000
NBP[1]788*	0.0000	0.0000	0.0000	0.0000	0.0000	0.0000
NBP[1]825*	0.0000	0.0000	0.0000	0.0000	0.0000	0.0000
NBP[1]873*	0.0000	0.0000	0.0000	0.0000	0.0000	0.0000
NBP[1]926*	0.0000	0.0000	0.0000	0.0000	0.0000	0.0000
NBP[1]978*	0.0000	0.0000	0.0000	0.0000	0.0000	0.0000
NBP[1]1021*	0.0000	0.0000	0.0000	0.0000	0.0000	0.0000
NBP[1]1075*	0.0000	0.0000	0.0000	0.0000	0.0000	0.0000
NBP[1]1123*	0.0000	0.0000	0.0000	0.0000	0.0000	0.0000
NBP[1]1173*	0.0000	0.0000	0.0000	0.0000	0.0000	0.0000
NBP[1]1250*	0.0000	0.0000	0.0000	0.0000	0.0000	0.0000
NBP[1]1339*	0.0000	0.0000	0.0000	0.0000	0.0000	0.0000
NBP[1]1432*	0.0000	0.0000	0.0000	0.0000	0.0000	0.0000
NBP[1]1528*	0.0000	0.0000	0.0000	0.0000	0.0000	0.0000
NBP[1]1637*	0.0000	0.0000	0.0000	0.0000	0.0000	0.0000
NBP[1]1732*	0.0000	0.0000	0.0000	0.0000	0.0000	0.0000
NBP[1]1819*	0.0000	0.0000	0.0000	0.0000	0.0000	0.0000
NBP[1]1913*	0.0000	0.0000	0.0000	0.0000	0.0000	0.0000
Total	104.5231	1.0000	45.2194	1.0000	1.8884	1.0000

Material Stream: permeate

Fluid Package: Basis-1
Property Package: Peng-Robinson

CONDITIONS

		Overall	Vapour Phase
Vapour / Phase Fraction		1.0000	1.0000
Temperature:	(F)	100.0 *	100.0
Pressure:	(psig)	20.00 *	20.00
Molar Flow	(MMSCFD)	2.810 *	2.810
Mass Flow	(tonne/d)	76.19	76.19
Std Ideal Liq Vol Flow	(barrel/day)	1140	1140
Molar Enthalpy	(kJ/kgmole)	-1.319e+005	-1.319e+005
Molar Entropy	(kJ/kgmole-C)	181.4	181.4
Heat Flow	(MMBtu/hr)	-17.50	-17.50
Liq Vol Flow @Std Cond	(barrel/day)	4.980e+005 *	4.980e+005

PROPERTIES

		Overall	Vapour Phase
Molecular Weight		22.68	22.68
Molar Density	(kgmole/m3)	9.306e-002	9.306e-002
Mass Density	(kg/m3)	2.111	2.111
Act. Volume Flow	(barrel/day)	2.270e+005	2.270e+005
Mass Enthalpy	(kJ/kg)	-5817	-5817
Mass Entropy	(kJ/kg-C)	7.998	7.998
Heat Capacity	(kJ/kgmole-C)	37.74	37.74
Mass Heat Capacity	(kJ/kg-C)	1.664	1.664
LHV Molar Basis (Std)	(Btu/SCF)	727.1	727.1
LHV Mass Basis (Std)	(kJ/kg)	2.829e+004	2.829e+004
Phase Fraction [Vol. Basis]		1.000	1.000

* Specified by user.

Material Stream: permeate (continued)

Fluid Package: Basis-1
Property Package: Peng-Robinson

PROPERTIES

	Overall	Vapour Phase
Phase Fraction [Mass Basis]	1.000	1.000
Partial Pressure of CO2 (psig)	-8.100	---
Cost Based on Flow (Cost/s)	0.0000	0.0000
Act. Gas Flow (ACT_m3/h)	1504	1504
Avg. Liq. Density (kgmole/m3)	18.53	18.53
Specific Heat (kJ/kgmole-C)	37.74	37.74
Std. Gas Flow (STD_m3/h)	3309	3309
Std. Ideal Liq. Mass Density (kg/m3)	420.3	420.3
Act. Liq. Flow (barrel/day)	---	---
Z Factor	0.9944	0.9944
Watson K	14.59	14.59
User Property	---	---
Partial Pressure of H2S (psig)	-14.70	---
Cp/(Cp - R)	1.283	1.283
Cp/Cv	1.292	1.292
Heat of Vap. (kJ/kgmole)	1.372e+004	---
Kinematic Viscosity (cSt)	5.993	5.993
Liq. Mass Density (Std. Cond) (kg/m3)	0.9622	0.9622
Liq. Vol. Flow (Std. Cond) (barrel/day)	4.980e+005	4.980e+005
Liquid Fraction	0.0000	0.0000
Molar Volume (m3/kgmole)	10.75	10.75
Mass Heat of Vap. (kJ/kg)	604.9	---
Phase Fraction [Molar Basis]	1.0000	1.0000
Surface Tension (dyne/cm)	---	---
Thermal Conductivity (W/m-K)	3.032e-002	3.032e-002
Viscosity (cP)	1.265e-002	1.265e-002
Cv (Semi-Ideal) (kJ/kgmole-C)	29.43	29.43
Mass Cv (Semi-Ideal) (kJ/kg-C)	1.297	1.297
Cv (kJ/kgmole-C)	29.20	29.20
Mass Cv (kJ/kg-C)	1.288	1.288
Cv (Ent. Method) (kJ/kgmole-C)	---	---
Mass Cv (Ent. Method) (kJ/kg-C)	---	---
Cp/Cv (Ent. Method)	---	---
Reid VP at 37.8 C (psig)	---	---
True VP at 37.8 C (psig)	---	---
Liq. Vol. Flow - Sum(Std. Cond) (barrel/day)	4.980e+005	4.980e+005
HHV Molar Basis (Std) (Btu/SCF)	800.0	800.0
HHV Mass Basis (Std) (kJ/kg)	3.113e+004	3.113e+004
CO2 Loading	---	---
CO2 App ML Con (kgmole/m3)	---	---
CO2 App WT Con (kgmol/kg)	---	---
Phase Fraction [Act. Vol. Basis]	1.000	1.000
Mass Exergy (kJ/kg)	93.92	---
Viscosity Index	-9.135	---
Ideal Gas Cp/Cv	1.285	1.285
Ideal Gas Cp (kJ/kgmole-C)	37.49	37.49
Mass Ideal Gas Cp (kJ/kg-C)	1.653	1.653
Bubble Point Pressure (psig)	---	---

COMPOSITION

Overall Phase

Vapour Fraction 1.0000

COMPONENTS	MOLAR FLOW (kgmole/h)	MOLE FRACTION	MASS FLOW (tonne/d)	MASS FRACTION	LIQUID VOLUME FLOW (m3/h)	LIQUID VOLUME FRACTION
Methane	100.4480 *	0.7177 *	38.6754 *	0.5076 *	5.3825 *	0.7126 *
Ethane	5.2335 *	0.0374 *	3.7769 *	0.0496 *	0.4424 *	0.0586 *
Propane	0.3663 *	0.0026 *	0.3877 *	0.0051 *	0.0319 *	0.0042 *

* Specified by user.

Material Stream: permeate (continued)

Fluid Package: Basis-1
Property Package: Peng-Robinson

COMPOSITION

Overall Phase (continued)

Vapour Fraction 1.0000

COMPONENTS	MOLAR FLOW (kgmole/h)	MOLE FRACTION	MASS FLOW (tonne/d)	MASS FRACTION	LIQUID VOLUME FLOW (m3/h)	LIQUID VOLUME FRACTION
i-Butane	0.0209 *	0.0001 *	0.0292 *	0.0004 *	0.0022 *	0.0003 *
n-Butane	0.0209 *	0.0001 *	0.0292 *	0.0004 *	0.0021 *	0.0003 *
i-Pentane	0.0105 *	0.0001 *	0.0181 *	0.0002 *	0.0012 *	0.0002 *
n-Pentane	0.0000 *	0.0000 *	0.0000 *	0.0000 *	0.0000 *	0.0000 *
n-Hexane	0.2093 *	0.0015 *	0.4330 *	0.0057 *	0.0272 *	0.0036 *
Nitrogen	7.0412 *	0.0503 *	4.7339 *	0.0621 *	0.2446 *	0.0324 *
CO2	26.6072 *	0.1901 *	28.1034 *	0.3689 *	1.4188 *	0.1878 *
H2S	0.0000 *	0.0000 *	0.0000 *	0.0000 *	0.0000 *	0.0000 *
H2O	0.0000 *	0.0000 *	0.0000 *	0.0000 *	0.0000 *	0.0000 *
NBP[1]95*	0.0000 *	0.0000 *	0.0000 *	0.0000 *	0.0000 *	0.0000 *
NBP[1]121*	0.0000 *	0.0000 *	0.0000 *	0.0000 *	0.0000 *	0.0000 *
NBP[1]147*	0.0000 *	0.0000 *	0.0000 *	0.0000 *	0.0000 *	0.0000 *
NBP[1]171*	0.0000 *	0.0000 *	0.0000 *	0.0000 *	0.0000 *	0.0000 *
NBP[1]195*	0.0000 *	0.0000 *	0.0000 *	0.0000 *	0.0000 *	0.0000 *
NBP[1]222*	0.0000 *	0.0000 *	0.0000 *	0.0000 *	0.0000 *	0.0000 *
NBP[1]248*	0.0000 *	0.0000 *	0.0000 *	0.0000 *	0.0000 *	0.0000 *
NBP[1]273*	0.0000 *	0.0000 *	0.0000 *	0.0000 *	0.0000 *	0.0000 *
NBP[1]299*	0.0000 *	0.0000 *	0.0000 *	0.0000 *	0.0000 *	0.0000 *
NBP[1]325*	0.0000 *	0.0000 *	0.0000 *	0.0000 *	0.0000 *	0.0000 *
NBP[1]351*	0.0000 *	0.0000 *	0.0000 *	0.0000 *	0.0000 *	0.0000 *
NBP[1]377*	0.0000 *	0.0000 *	0.0000 *	0.0000 *	0.0000 *	0.0000 *
NBP[1]402*	0.0000 *	0.0000 *	0.0000 *	0.0000 *	0.0000 *	0.0000 *
NBP[1]428*	0.0000 *	0.0000 *	0.0000 *	0.0000 *	0.0000 *	0.0000 *
NBP[1]454*	0.0000 *	0.0000 *	0.0000 *	0.0000 *	0.0000 *	0.0000 *
NBP[1]480*	0.0000 *	0.0000 *	0.0000 *	0.0000 *	0.0000 *	0.0000 *
NBP[1]505*	0.0000 *	0.0000 *	0.0000 *	0.0000 *	0.0000 *	0.0000 *
NBP[1]531*	0.0000 *	0.0000 *	0.0000 *	0.0000 *	0.0000 *	0.0000 *
NBP[1]557*	0.0000 *	0.0000 *	0.0000 *	0.0000 *	0.0000 *	0.0000 *
NBP[1]582*	0.0000 *	0.0000 *	0.0000 *	0.0000 *	0.0000 *	0.0000 *
NBP[1]608*	0.0000 *	0.0000 *	0.0000 *	0.0000 *	0.0000 *	0.0000 *
NBP[1]634*	0.0000 *	0.0000 *	0.0000 *	0.0000 *	0.0000 *	0.0000 *
NBP[1]659*	0.0000 *	0.0000 *	0.0000 *	0.0000 *	0.0000 *	0.0000 *
NBP[1]685*	0.0000 *	0.0000 *	0.0000 *	0.0000 *	0.0000 *	0.0000 *
NBP[1]711*	0.0000 *	0.0000 *	0.0000 *	0.0000 *	0.0000 *	0.0000 *
NBP[1]736*	0.0000 *	0.0000 *	0.0000 *	0.0000 *	0.0000 *	0.0000 *
NBP[1]762*	0.0000 *	0.0000 *	0.0000 *	0.0000 *	0.0000 *	0.0000 *
NBP[1]788*	0.0000 *	0.0000 *	0.0000 *	0.0000 *	0.0000 *	0.0000 *
NBP[1]825*	0.0000 *	0.0000 *	0.0000 *	0.0000 *	0.0000 *	0.0000 *
NBP[1]873*	0.0000 *	0.0000 *	0.0000 *	0.0000 *	0.0000 *	0.0000 *
NBP[1]926*	0.0000 *	0.0000 *	0.0000 *	0.0000 *	0.0000 *	0.0000 *
NBP[1]978*	0.0000 *	0.0000 *	0.0000 *	0.0000 *	0.0000 *	0.0000 *
NBP[1]1021*	0.0000 *	0.0000 *	0.0000 *	0.0000 *	0.0000 *	0.0000 *
NBP[1]1075*	0.0000 *	0.0000 *	0.0000 *	0.0000 *	0.0000 *	0.0000 *
NBP[1]1123*	0.0000 *	0.0000 *	0.0000 *	0.0000 *	0.0000 *	0.0000 *
NBP[1]1173*	0.0000 *	0.0000 *	0.0000 *	0.0000 *	0.0000 *	0.0000 *
NBP[1]1250*	0.0000 *	0.0000 *	0.0000 *	0.0000 *	0.0000 *	0.0000 *
NBP[1]1339*	0.0000 *	0.0000 *	0.0000 *	0.0000 *	0.0000 *	0.0000 *
NBP[1]1432*	0.0000 *	0.0000 *	0.0000 *	0.0000 *	0.0000 *	0.0000 *
NBP[1]1528*	0.0000 *	0.0000 *	0.0000 *	0.0000 *	0.0000 *	0.0000 *
NBP[1]1637*	0.0000 *	0.0000 *	0.0000 *	0.0000 *	0.0000 *	0.0000 *
NBP[1]1732*	0.0000 *	0.0000 *	0.0000 *	0.0000 *	0.0000 *	0.0000 *
NBP[1]1819*	0.0000 *	0.0000 *	0.0000 *	0.0000 *	0.0000 *	0.0000 *
NBP[1]1913*	0.0000 *	0.0000 *	0.0000 *	0.0000 *	0.0000 *	0.0000 *
Total	139.9579	1.0000	76.1868	1.0000	7.5529	1.0000

* Specified by user.

Material Stream: permeate (continued)

Fluid Package: Basis-1
Property Package: Peng-Robinson

COMPOSITION

Vapour Phase

Phase Fraction 1.000

COMPONENTS	MOLAR FLOW (kgmole/h)	MOLE FRACTION	MASS FLOW (tonne/d)	MASS FRACTION	LIQUID VOLUME FLOW (m3/h)	LIQUID VOLUME FRACTION
Methane	100.4480	0.7177	38.6754	0.5076	5.3825	0.7126
Ethane	5.2335	0.0374	3.7769	0.0496	0.4424	0.0586
Propane	0.3663	0.0026	0.3877	0.0051	0.0319	0.0042
i-Butane	0.0209	0.0001	0.0292	0.0004	0.0022	0.0003
n-Butane	0.0209	0.0001	0.0292	0.0004	0.0021	0.0003
i-Pentane	0.0105	0.0001	0.0181	0.0002	0.0012	0.0002
n-Pentane	0.0000	0.0000	0.0000	0.0000	0.0000	0.0000
n-Hexane	0.2093	0.0015	0.4330	0.0057	0.0272	0.0036
Nitrogen	7.0412	0.0503	4.7339	0.0621	0.2446	0.0324
CO2	26.6072	0.1901	28.1034	0.3689	1.4188	0.1878
H2S	0.0000	0.0000	0.0000	0.0000	0.0000	0.0000
H2O	0.0000	0.0000	0.0000	0.0000	0.0000	0.0000
NBP[1]95*	0.0000	0.0000	0.0000	0.0000	0.0000	0.0000
NBP[1]121*	0.0000	0.0000	0.0000	0.0000	0.0000	0.0000
NBP[1]147*	0.0000	0.0000	0.0000	0.0000	0.0000	0.0000
NBP[1]171*	0.0000	0.0000	0.0000	0.0000	0.0000	0.0000
NBP[1]195*	0.0000	0.0000	0.0000	0.0000	0.0000	0.0000
NBP[1]222*	0.0000	0.0000	0.0000	0.0000	0.0000	0.0000
NBP[1]248*	0.0000	0.0000	0.0000	0.0000	0.0000	0.0000
NBP[1]273*	0.0000	0.0000	0.0000	0.0000	0.0000	0.0000
NBP[1]299*	0.0000	0.0000	0.0000	0.0000	0.0000	0.0000
NBP[1]325*	0.0000	0.0000	0.0000	0.0000	0.0000	0.0000
NBP[1]351*	0.0000	0.0000	0.0000	0.0000	0.0000	0.0000
NBP[1]377*	0.0000	0.0000	0.0000	0.0000	0.0000	0.0000
NBP[1]402*	0.0000	0.0000	0.0000	0.0000	0.0000	0.0000
NBP[1]428*	0.0000	0.0000	0.0000	0.0000	0.0000	0.0000
NBP[1]454*	0.0000	0.0000	0.0000	0.0000	0.0000	0.0000
NBP[1]480*	0.0000	0.0000	0.0000	0.0000	0.0000	0.0000
NBP[1]505*	0.0000	0.0000	0.0000	0.0000	0.0000	0.0000
NBP[1]531*	0.0000	0.0000	0.0000	0.0000	0.0000	0.0000
NBP[1]557*	0.0000	0.0000	0.0000	0.0000	0.0000	0.0000
NBP[1]582*	0.0000	0.0000	0.0000	0.0000	0.0000	0.0000
NBP[1]608*	0.0000	0.0000	0.0000	0.0000	0.0000	0.0000
NBP[1]634*	0.0000	0.0000	0.0000	0.0000	0.0000	0.0000
NBP[1]659*	0.0000	0.0000	0.0000	0.0000	0.0000	0.0000
NBP[1]685*	0.0000	0.0000	0.0000	0.0000	0.0000	0.0000
NBP[1]711*	0.0000	0.0000	0.0000	0.0000	0.0000	0.0000
NBP[1]736*	0.0000	0.0000	0.0000	0.0000	0.0000	0.0000
NBP[1]762*	0.0000	0.0000	0.0000	0.0000	0.0000	0.0000
NBP[1]788*	0.0000	0.0000	0.0000	0.0000	0.0000	0.0000
NBP[1]825*	0.0000	0.0000	0.0000	0.0000	0.0000	0.0000
NBP[1]873*	0.0000	0.0000	0.0000	0.0000	0.0000	0.0000
NBP[1]926*	0.0000	0.0000	0.0000	0.0000	0.0000	0.0000
NBP[1]978*	0.0000	0.0000	0.0000	0.0000	0.0000	0.0000
NBP[1]1021*	0.0000	0.0000	0.0000	0.0000	0.0000	0.0000
NBP[1]1075*	0.0000	0.0000	0.0000	0.0000	0.0000	0.0000
NBP[1]1123*	0.0000	0.0000	0.0000	0.0000	0.0000	0.0000
NBP[1]1173*	0.0000	0.0000	0.0000	0.0000	0.0000	0.0000
NBP[1]1250*	0.0000	0.0000	0.0000	0.0000	0.0000	0.0000
NBP[1]1339*	0.0000	0.0000	0.0000	0.0000	0.0000	0.0000
NBP[1]1432*	0.0000	0.0000	0.0000	0.0000	0.0000	0.0000
NBP[1]1528*	0.0000	0.0000	0.0000	0.0000	0.0000	0.0000
NBP[1]1637*	0.0000	0.0000	0.0000	0.0000	0.0000	0.0000
NBP[1]1732*	0.0000	0.0000	0.0000	0.0000	0.0000	0.0000

* Specified by user.

Material Stream: permeate (continued)

Fluid Package: Basis-1
Property Package: Peng-Robinson

COMPOSITION

Vapour Phase (continued)

Phase Fraction 1.000

COMPONENTS	MOLAR FLOW (kgmole/h)	MOLE FRACTION	MASS FLOW (tonne/d)	MASS FRACTION	LIQUID VOLUME FLOW (m3/h)	LIQUID VOLUME FRACTION
NBP[1]1819*	0.0000	0.0000	0.0000	0.0000	0.0000	0.0000
NBP[1]1913*	0.0000	0.0000	0.0000	0.0000	0.0000	0.0000
Total	139.9579	1.0000	76.1868	1.0000	7.5529	1.0000

Material Stream: SEP GAS

Fluid Package: Basis-1
Property Package: Peng-Robinson

CONDITIONS

		Overall	Vapour Phase	Liquid Phase	Aqueous Phase
Vapour / Phase Fraction		0.9999	0.9999	0.0001	0.0000
Temperature:	(F)	180.0	180.0	180.0	180.0
Pressure:	(psig)	1230	1230	1230	1230
Molar Flow	(MMSCFD)	5.496	5.495	8.142e-004	0.0000
Mass Flow	(tonne/d)	147.4	146.8	0.5847	0.0000
Std Ideal Liq Vol Flow	(barrel/day)	2489	2486	3.539	0.0000
Molar Enthalpy	(kJ/kgmole)	-9.019e+004	-9.002e+004	-1.236e+006	-2.817e+005
Molar Entropy	(kJ/kgmole-C)	156.9	156.7	1602	67.29
Heat Flow	(MMBtu/hr)	-23.40	-23.35	-4.752e-002	0.0000
Liq Vol Flow @Std Cond	(barrel/day)	9.727e+005 *	9.726e+005	3.725	0.0000

PROPERTIES

		Overall	Vapour Phase	Liquid Phase	Aqueous Phase
Molecular Weight		22.43	22.35	600.8	18.03
Molar Density	(kgmole/m3)	3.423	3.424	1.575	45.25
Mass Density	(kg/m3)	76.79	76.51	946.0	815.6
Act. Volume Flow	(barrel/day)	1.207e+004	1.207e+004	3.888	0.0000
Mass Enthalpy	(kJ/kg)	-4020	-4028	-2058	-1.563e+004
Mass Entropy	(kJ/kg-C)	6.996	7.013	2.667	3.733
Heat Capacity	(kJ/kgmole-C)	58.27	58.09	1284	78.26
Mass Heat Capacity	(kJ/kg-C)	2.598	2.599	2.137	4.342
LHV Molar Basis (Std)	(Btu/SCF)	---	---	---	5.051e-003
LHV Mass Basis (Std)	(kJ/kg)	---	---	---	0.2473
Phase Fraction [Vol. Basis]		0.9986	0.9986	1.422e-003	---
Phase Fraction [Mass Basis]		0.9960	0.9960	3.968e-003	0.0000
Partial Pressure of CO2	(psig)	26.78	---	---	---
Cost Based on Flow	(Cost/s)	0.0000	0.0000	0.0000	0.0000
Act. Gas Flow	(ACT_m3/h)	79.93	79.93	---	---
Avg. Liq. Density	(kgmole/m3)	16.60	16.62	1.730	55.35
Specific Heat	(kJ/kgmole-C)	58.27	58.09	1284	78.26
Std. Gas Flow	(STD_m3/h)	6472	6471	0.9588	0.0000
Std. Ideal Liq. Mass Density	(kg/m3)	372.3	371.4	1039	997.8
Act. Liq. Flow	(barrel/day)	3.888	---	3.888	0.0000
Z Factor		---	0.8483	1.845	6.419e-002
Watson K		16.94	16.97	11.55	8.528
User Property		---	---	---	---
Partial Pressure of H2S	(psig)	-14.69	---	---	---
Cp/(Cp - R)		1.166	1.167	1.007	1.119
Cp/Cv		1.462	1.464	1.094	1.166
Heat of Vap.	(kJ/kgmole)	2.097e+004	---	---	---
Kinematic Viscosity	(cSt)	---	0.2086	187.0	0.4187
Liq. Mass Density (Std. Cond)	(kg/m3)	0.9529	0.9492	987.5	1015
Liq. Vol. Flow (Std. Cond)	(barrel/day)	9.727e+005	9.726e+005	3.725	0.0000
Liquid Fraction		1.481e-004	0.0000	1.000	1.000
Molar Volume	(m3/kgmole)	0.2921	0.2921	0.6351	2.210e-002

* Specified by user.

Material Stream: SEP GAS (continued)

Fluid Package: Basis-1
Property Package: Peng-Robinson

PROPERTIES

		Overall	Vapour Phase	Liquid Phase	Aqueous Phase
Mass Heat of Vap.	(kJ/kg)	934.9	---	---	---
Phase Fraction [Molar Basis]		0.9999	0.9999	0.0001	0.0000
Surface Tension	(dyne/cm)	12.57	---	12.57	61.90
Thermal Conductivity	(W/m-K)	---	4.452e-002	0.1063	0.6712
Viscosity	(cP)	---	1.596e-002	176.9	0.3415
Cv (Semi-Ideal)	(kJ/kgmole-C)	49.96	49.77	1275	69.95
Mass Cv (Semi-Ideal)	(kJ/kg-C)	2.227	2.227	2.123	3.880
Cv	(kJ/kgmole-C)	39.87	39.68	1173	67.10
Mass Cv	(kJ/kg-C)	1.777	1.776	1.953	3.722
Cv (Ent. Method)	(kJ/kgmole-C)	---	---	1201	---
Mass Cv (Ent. Method)	(kJ/kg-C)	---	---	1.999	---
Cp/Cv (Ent. Method)		---	---	1.069	---
Reid VP at 37.8 C	(psig)	---	---	52.44	---
True VP at 37.8 C	(psig)	---	---	1114	---
Liq. Vol. Flow - Sum(Std. Cond)	(barrel/day)	9.726e+005	9.726e+005	3.725	0.0000
HHV Molar Basis (Std)	(Btu/SCF)	---	---	---	46.45
HHV Mass Basis (Std)	(kJ/kg)	---	---	---	2274
CO2 Loading		---	---	---	---
CO2 App ML Con	(kgmole/m3)	---	---	3.614e-002	---
CO2 App WT Con	(kgmol/kg)	---	---	3.820e-005	---
Phase Fraction [Act. Vol. Basis]		0.9997	0.9997	3.221e-004	0.0000
Mass Exergy	(kJ/kg)	468.5	---	---	---
Viscosity Index		---	---	---	---
Ideal Gas Cp/Cv		1.215	1.216	1.008	1.324
Ideal Gas Cp	(kJ/kgmole-C)	46.90	46.75	1096	33.95
Mass Ideal Gas Cp	(kJ/kg-C)	2.091	2.092	1.824	1.884
Bubble Point Pressure	(psig)	6880	---	---	---

COMPOSITION

Overall Phase

Vapour Fraction 0.9999

COMPONENTS	MOLAR FLOW (kgmole/h)	MOLE FRACTION	MASS FLOW (tonne/d)	MASS FRACTION	LIQUID VOLUME FLOW (m3/h)	LIQUID VOLUME FRACTION
Methane	204.0754	0.7455	78.5751	0.5332	10.9353	0.6631
Ethane	27.8108	0.1016	20.0704	0.1362	2.3512	0.1426
Propane	14.2708	0.0521	15.1032	0.1025	1.2420	0.0753
i-Butane	1.8187	0.0066	2.5371	0.0172	0.1881	0.0114
n-Butane	3.4716	0.0127	4.8427	0.0329	0.3460	0.0210
i-Pentane	0.6913	0.0025	1.1971	0.0081	0.0800	0.0049
n-Pentane	0.7593	0.0028	1.3149	0.0089	0.0870	0.0053
n-Hexane	0.9805	0.0036	2.0279	0.0138	0.1275	0.0077
Nitrogen	5.5517	0.0203	3.7325	0.0253	0.1929	0.0117
CO2	9.1224	0.0333	9.6354	0.0654	0.4864	0.0295
H2S	0.0005	0.0000	0.0004	0.0000	0.0000	0.0000
H2O	2.1579	0.0079	0.9330	0.0063	0.0390	0.0024
NBP[1]95*	0.2273	0.0008	0.3706	0.0025	0.0227	0.0014
NBP[1]121*	0.2513	0.0009	0.4394	0.0030	0.0266	0.0016
NBP[1]147*	0.2969	0.0011	0.5715	0.0039	0.0340	0.0021
NBP[1]171*	0.5172	0.0019	1.0883	0.0074	0.0637	0.0039
NBP[1]195*	0.6066	0.0022	1.3624	0.0092	0.0788	0.0048
NBP[1]222*	0.3860	0.0014	0.9323	0.0063	0.0533	0.0032
NBP[1]248*	0.2686	0.0010	0.6976	0.0047	0.0394	0.0024
NBP[1]273*	0.1756	0.0006	0.4878	0.0033	0.0272	0.0017
NBP[1]299*	0.1081	0.0004	0.3200	0.0022	0.0177	0.0011
NBP[1]325*	0.0592	0.0002	0.1863	0.0013	0.0102	0.0006
NBP[1]351*	0.0352	0.0001	0.1179	0.0008	0.0064	0.0004
NBP[1]377*	0.0228	0.0001	0.0812	0.0006	0.0044	0.0003

* Specified by user.

Material Stream: SEP GAS (continued)

Fluid Package: Basis-1
Property Package: Peng-Robinson

COMPOSITION

Overall Phase (continued)

Vapour Fraction 0.9999

COMPONENTS	MOLAR FLOW (kgmole/h)	MOLE FRACTION	MASS FLOW (tonne/d)	MASS FRACTION	LIQUID VOLUME FLOW (m3/h)	LIQUID VOLUME FRACTION
NBP[1]402*	0.0145	0.0001	0.0551	0.0004	0.0029	0.0002
NBP[1]428*	0.0093	0.0000	0.0377	0.0003	0.0020	0.0001
NBP[1]454*	0.0061	0.0000	0.0265	0.0002	0.0014	0.0001
NBP[1]480*	0.0040	0.0000	0.0186	0.0001	0.0010	0.0001
NBP[1]505*	0.0025	0.0000	0.0122	0.0001	0.0006	0.0000
NBP[1]531*	0.0015	0.0000	0.0078	0.0001	0.0004	0.0000
NBP[1]557*	0.0009	0.0000	0.0049	0.0000	0.0002	0.0000
NBP[1]582*	0.0005	0.0000	0.0030	0.0000	0.0001	0.0000
NBP[1]608*	0.0003	0.0000	0.0018	0.0000	0.0001	0.0000
NBP[1]634*	0.0002	0.0000	0.0011	0.0000	0.0001	0.0000
NBP[1]659*	0.0001	0.0000	0.0006	0.0000	0.0000	0.0000
NBP[1]685*	0.0001	0.0000	0.0004	0.0000	0.0000	0.0000
NBP[1]711*	0.0000	0.0000	0.0002	0.0000	0.0000	0.0000
NBP[1]736*	0.0000	0.0000	0.0001	0.0000	0.0000	0.0000
NBP[1]762*	0.0000	0.0000	0.0001	0.0000	0.0000	0.0000
NBP[1]788*	0.0000	0.0000	0.0000	0.0000	0.0000	0.0000
NBP[1]825*	0.0000	0.0000	0.0000	0.0000	0.0000	0.0000
NBP[1]873*	0.0000	0.0000	0.0000	0.0000	0.0000	0.0000
NBP[1]926*	0.0000	0.0000	0.0000	0.0000	0.0000	0.0000
NBP[1]978*	0.0000	0.0000	0.0000	0.0000	0.0000	0.0000
NBP[1]1021*	0.0000	0.0000	0.0000	0.0000	0.0000	0.0000
NBP[1]1075*	0.0000	0.0000	0.0000	0.0000	0.0000	0.0000
NBP[1]1123*	0.0000	0.0000	0.0000	0.0000	0.0000	0.0000
NBP[1]1173*	0.0000	0.0000	0.0000	0.0000	0.0000	0.0000
NBP[1]1250*	0.0000	0.0000	0.0000	0.0000	0.0000	0.0000
NBP[1]1339*	0.0000	0.0000	0.0000	0.0000	0.0000	0.0000
NBP[1]1432*	0.0000	0.0000	0.0000	0.0000	0.0000	0.0000
NBP[1]1528*	0.0000	0.0000	0.0000	0.0000	0.0000	0.0000
NBP[1]1637*	0.0000	0.0000	0.0000	0.0000	0.0000	0.0000
NBP[1]1732*	0.0000	0.0000	0.0001	0.0000	0.0000	0.0000
NBP[1]1819*	0.0096	0.0000	0.2545	0.0017	0.0099	0.0006
NBP[1]1913*	0.0112	0.0000	0.3148	0.0021	0.0121	0.0007
Total	273.7266	1.0000	147.3644	1.0000	16.4906	1.0000

Vapour Phase

Phase Fraction 0.9999

COMPONENTS	MOLAR FLOW (kgmole/h)	MOLE FRACTION	MASS FLOW (tonne/d)	MASS FRACTION	LIQUID VOLUME FLOW (m3/h)	LIQUID VOLUME FRACTION
Methane	204.0638	0.7456	78.5706	0.5353	10.9347	0.6640
Ethane	27.8085	0.1016	20.0688	0.1367	2.3510	0.1428
Propane	14.2692	0.0521	15.1015	0.1029	1.2419	0.0754
i-Butane	1.8185	0.0066	2.5367	0.0173	0.1881	0.0114
n-Butane	3.4710	0.0127	4.8420	0.0330	0.3459	0.0210
i-Pentane	0.6912	0.0025	1.1968	0.0082	0.0800	0.0049
n-Pentane	0.7592	0.0028	1.3146	0.0090	0.0870	0.0053
n-Hexane	0.9802	0.0036	2.0273	0.0138	0.1275	0.0077
Nitrogen	5.5514	0.0203	3.7323	0.0254	0.1929	0.0117
CO2	9.1215	0.0333	9.6344	0.0656	0.4864	0.0295
H2S	0.0005	0.0000	0.0004	0.0000	0.0000	0.0000
H2O	2.1577	0.0079	0.9329	0.0064	0.0389	0.0024
NBP[1]95*	0.2273	0.0008	0.3705	0.0025	0.0227	0.0014
NBP[1]121*	0.2513	0.0009	0.4393	0.0030	0.0266	0.0016
NBP[1]147*	0.2969	0.0011	0.5714	0.0039	0.0340	0.0021
NBP[1]171*	0.5171	0.0019	1.0880	0.0074	0.0637	0.0039
NBP[1]195*	0.6064	0.0022	1.3618	0.0093	0.0788	0.0048

* Specified by user.

Material Stream: SEP GAS (continued)

Fluid Package: Basis-1
Property Package: Peng-Robinson

COMPOSITION

Vapour Phase (continued)

Phase Fraction 0.9999

COMPONENTS	MOLAR FLOW (kgmole/h)	MOLE FRACTION	MASS FLOW (tonne/d)	MASS FRACTION	LIQUID VOLUME FLOW (m3/h)	LIQUID VOLUME FRACTION
NBP[1]222*	0.3858	0.0014	0.9319	0.0063	0.0533	0.0032
NBP[1]248*	0.2685	0.0010	0.6972	0.0047	0.0394	0.0024
NBP[1]273*	0.1755	0.0006	0.4875	0.0033	0.0272	0.0017
NBP[1]299*	0.1080	0.0004	0.3197	0.0022	0.0177	0.0011
NBP[1]325*	0.0592	0.0002	0.1861	0.0013	0.0102	0.0006
NBP[1]351*	0.0352	0.0001	0.1177	0.0008	0.0064	0.0004
NBP[1]377*	0.0227	0.0001	0.0811	0.0006	0.0043	0.0003
NBP[1]402*	0.0145	0.0001	0.0550	0.0004	0.0029	0.0002
NBP[1]428*	0.0093	0.0000	0.0376	0.0003	0.0020	0.0001
NBP[1]454*	0.0061	0.0000	0.0264	0.0002	0.0014	0.0001
NBP[1]480*	0.0040	0.0000	0.0185	0.0001	0.0010	0.0001
NBP[1]505*	0.0025	0.0000	0.0121	0.0001	0.0006	0.0000
NBP[1]531*	0.0015	0.0000	0.0077	0.0001	0.0004	0.0000
NBP[1]557*	0.0009	0.0000	0.0048	0.0000	0.0002	0.0000
NBP[1]582*	0.0005	0.0000	0.0029	0.0000	0.0001	0.0000
NBP[1]608*	0.0003	0.0000	0.0017	0.0000	0.0001	0.0000
NBP[1]634*	0.0002	0.0000	0.0010	0.0000	0.0000	0.0000
NBP[1]659*	0.0001	0.0000	0.0006	0.0000	0.0000	0.0000
NBP[1]685*	0.0000	0.0000	0.0003	0.0000	0.0000	0.0000
NBP[1]711*	0.0000	0.0000	0.0002	0.0000	0.0000	0.0000
NBP[1]736*	0.0000	0.0000	0.0001	0.0000	0.0000	0.0000
NBP[1]762*	0.0000	0.0000	0.0001	0.0000	0.0000	0.0000
NBP[1]788*	0.0000	0.0000	0.0000	0.0000	0.0000	0.0000
NBP[1]825*	0.0000	0.0000	0.0000	0.0000	0.0000	0.0000
NBP[1]873*	0.0000	0.0000	0.0000	0.0000	0.0000	0.0000
NBP[1]926*	0.0000	0.0000	0.0000	0.0000	0.0000	0.0000
NBP[1]978*	0.0000	0.0000	0.0000	0.0000	0.0000	0.0000
NBP[1]1021*	0.0000	0.0000	0.0000	0.0000	0.0000	0.0000
NBP[1]1075*	0.0000	0.0000	0.0000	0.0000	0.0000	0.0000
NBP[1]1123*	0.0000	0.0000	0.0000	0.0000	0.0000	0.0000
NBP[1]1173*	0.0000	0.0000	0.0000	0.0000	0.0000	0.0000
NBP[1]1250*	0.0000	0.0000	0.0000	0.0000	0.0000	0.0000
NBP[1]1339*	0.0000	0.0000	0.0000	0.0000	0.0000	0.0000
NBP[1]1432*	0.0000	0.0000	0.0000	0.0000	0.0000	0.0000
NBP[1]1528*	0.0000	0.0000	0.0000	0.0000	0.0000	0.0000
NBP[1]1637*	0.0000	0.0000	0.0000	0.0000	0.0000	0.0000
NBP[1]1732*	0.0000	0.0000	0.0000	0.0000	0.0000	0.0000
NBP[1]1819*	0.0000	0.0000	0.0000	0.0000	0.0000	0.0000
NBP[1]1913*	0.0000	0.0000	0.0000	0.0000	0.0000	0.0000
Total	273.6861	1.0000	146.7797	1.0000	16.4671	1.0000

Liquid Phase

Phase Fraction 1.481e-004

COMPONENTS	MOLAR FLOW (kgmole/h)	MOLE FRACTION	MASS FLOW (tonne/d)	MASS FRACTION	LIQUID VOLUME FLOW (m3/h)	LIQUID VOLUME FRACTION
Methane	0.0116	0.2866	0.0045	0.0077	0.0006	0.0266
Ethane	0.0023	0.0560	0.0016	0.0028	0.0002	0.0082
Propane	0.0016	0.0393	0.0017	0.0029	0.0001	0.0059
i-Butane	0.0003	0.0066	0.0004	0.0006	0.0000	0.0012
n-Butane	0.0005	0.0134	0.0008	0.0013	0.0001	0.0023
i-Pentane	0.0001	0.0035	0.0002	0.0004	0.0000	0.0007
n-Pentane	0.0002	0.0041	0.0003	0.0005	0.0000	0.0008
n-Hexane	0.0003	0.0075	0.0006	0.0011	0.0000	0.0017
Nitrogen	0.0003	0.0075	0.0002	0.0004	0.0000	0.0005
CO2	0.0009	0.0230	0.0010	0.0017	0.0000	0.0021

* Specified by user.

Material Stream: SEP GAS (continued)

Fluid Package: Basis-1
Property Package: Peng-Robinson

COMPOSITION

Liquid Phase (continued)

Phase Fraction 1.481e-004

COMPONENTS	MOLAR FLOW (kgmole/h)	MOLE FRACTION	MASS FLOW (tonne/d)	MASS FRACTION	LIQUID VOLUME FLOW (m3/h)	LIQUID VOLUME FRACTION
H2S	0.0000	0.0000	0.0000	0.0000	0.0000	0.0000
H2O	0.0002	0.0053	0.0001	0.0002	0.0000	0.0002
NBP[1]95*	0.0000	0.0012	0.0001	0.0001	0.0000	0.0002
NBP[1]121*	0.0001	0.0015	0.0001	0.0002	0.0000	0.0003
NBP[1]147*	0.0001	0.0021	0.0002	0.0003	0.0000	0.0004
NBP[1]171*	0.0002	0.0041	0.0004	0.0006	0.0000	0.0009
NBP[1]195*	0.0002	0.0056	0.0005	0.0009	0.0000	0.0013
NBP[1]222*	0.0002	0.0043	0.0004	0.0007	0.0000	0.0010
NBP[1]248*	0.0001	0.0036	0.0004	0.0007	0.0000	0.0009
NBP[1]273*	0.0001	0.0029	0.0003	0.0006	0.0000	0.0008
NBP[1]299*	0.0001	0.0022	0.0003	0.0004	0.0000	0.0006
NBP[1]325*	0.0001	0.0015	0.0002	0.0003	0.0000	0.0004
NBP[1]351*	0.0000	0.0011	0.0002	0.0003	0.0000	0.0004
NBP[1]377*	0.0000	0.0009	0.0001	0.0002	0.0000	0.0003
NBP[1]402*	0.0000	0.0008	0.0001	0.0002	0.0000	0.0003
NBP[1]428*	0.0000	0.0006	0.0001	0.0002	0.0000	0.0002
NBP[1]454*	0.0000	0.0006	0.0001	0.0002	0.0000	0.0002
NBP[1]480*	0.0000	0.0005	0.0001	0.0002	0.0000	0.0002
NBP[1]505*	0.0000	0.0004	0.0001	0.0001	0.0000	0.0002
NBP[1]531*	0.0000	0.0003	0.0001	0.0001	0.0000	0.0002
NBP[1]557*	0.0000	0.0003	0.0001	0.0001	0.0000	0.0001
NBP[1]582*	0.0000	0.0002	0.0001	0.0001	0.0000	0.0001
NBP[1]608*	0.0000	0.0002	0.0000	0.0001	0.0000	0.0001
NBP[1]634*	0.0000	0.0002	0.0000	0.0001	0.0000	0.0001
NBP[1]659*	0.0000	0.0001	0.0000	0.0001	0.0000	0.0001
NBP[1]685*	0.0000	0.0001	0.0000	0.0001	0.0000	0.0001
NBP[1]711*	0.0000	0.0001	0.0000	0.0000	0.0000	0.0001
NBP[1]736*	0.0000	0.0001	0.0000	0.0000	0.0000	0.0000
NBP[1]762*	0.0000	0.0001	0.0000	0.0000	0.0000	0.0000
NBP[1]788*	0.0000	0.0000	0.0000	0.0000	0.0000	0.0000
NBP[1]825*	0.0000	0.0000	0.0000	0.0000	0.0000	0.0000
NBP[1]873*	0.0000	0.0000	0.0000	0.0000	0.0000	0.0000
NBP[1]926*	0.0000	0.0000	0.0000	0.0000	0.0000	0.0000
NBP[1]978*	0.0000	0.0000	0.0000	0.0000	0.0000	0.0000
NBP[1]1021*	0.0000	0.0000	0.0000	0.0000	0.0000	0.0000
NBP[1]1075*	0.0000	0.0000	0.0000	0.0000	0.0000	0.0000
NBP[1]1123*	0.0000	0.0000	0.0000	0.0000	0.0000	0.0000
NBP[1]1173*	0.0000	0.0000	0.0000	0.0000	0.0000	0.0000
NBP[1]1250*	0.0000	0.0000	0.0000	0.0000	0.0000	0.0000
NBP[1]1339*	0.0000	0.0000	0.0000	0.0000	0.0000	0.0000
NBP[1]1432*	0.0000	0.0000	0.0000	0.0000	0.0000	0.0000
NBP[1]1528*	0.0000	0.0000	0.0000	0.0000	0.0000	0.0000
NBP[1]1637*	0.0000	0.0000	0.0000	0.0000	0.0000	0.0000
NBP[1]1732*	0.0000	0.0001	0.0001	0.0001	0.0000	0.0001
NBP[1]1819*	0.0096	0.2358	0.2545	0.4352	0.0099	0.4239
NBP[1]1913*	0.0112	0.2756	0.3148	0.5383	0.0121	0.5163
Total	0.0406	1.0000	0.5847	1.0000	0.0234	1.0000

Aqueous Phase

Phase Fraction 0.0000

COMPONENTS	MOLAR FLOW (kgmole/h)	MOLE FRACTION	MASS FLOW (tonne/d)	MASS FRACTION	LIQUID VOLUME FLOW (m3/h)	LIQUID VOLUME FRACTION
Methane	0.0000	0.0000	0.0000	0.0000	0.0000	0.0000
Ethane	0.0000	0.0000	0.0000	0.0000	0.0000	0.0000
Propane	0.0000	0.0000	0.0000	0.0000	0.0000	0.0000

* Specified by user.

Material Stream: SEP GAS (continued)

Fluid Package: Basis-1
Property Package: Peng-Robinson

COMPOSITION

Aqueous Phase (continued)

Phase Fraction 0.0000

COMPONENTS	MOLAR FLOW (kgmole/h)	MOLE FRACTION	MASS FLOW (tonne/d)	MASS FRACTION	LIQUID VOLUME FLOW (m3/h)	LIQUID VOLUME FRACTION
i-Butane	0.0000	0.0000	0.0000	0.0000	0.0000	0.0000
n-Butane	0.0000	0.0000	0.0000	0.0000	0.0000	0.0000
i-Pentane	0.0000	0.0000	0.0000	0.0000	0.0000	0.0000
n-Pentane	0.0000	0.0000	0.0000	0.0000	0.0000	0.0000
n-Hexane	0.0000	0.0000	0.0000	0.0000	0.0000	0.0000
Nitrogen	0.0000	0.0000	0.0000	0.0000	0.0000	0.0000
CO2	0.0000	0.0004	0.0000	0.0010	0.0000	0.0012
H2S	0.0000	0.0000	0.0000	0.0000	0.0000	0.0000
H2O	0.0000	0.9996	0.0000	0.9990	0.0000	0.9987
NBP[1]95*	0.0000	0.0000	0.0000	0.0000	0.0000	0.0000
NBP[1]121*	0.0000	0.0000	0.0000	0.0000	0.0000	0.0000
NBP[1]147*	0.0000	0.0000	0.0000	0.0000	0.0000	0.0000
NBP[1]171*	0.0000	0.0000	0.0000	0.0000	0.0000	0.0000
NBP[1]195*	0.0000	0.0000	0.0000	0.0000	0.0000	0.0000
NBP[1]222*	0.0000	0.0000	0.0000	0.0000	0.0000	0.0000
NBP[1]248*	0.0000	0.0000	0.0000	0.0000	0.0000	0.0000
NBP[1]273*	0.0000	0.0000	0.0000	0.0000	0.0000	0.0000
NBP[1]299*	0.0000	0.0000	0.0000	0.0000	0.0000	0.0000
NBP[1]325*	0.0000	0.0000	0.0000	0.0000	0.0000	0.0000
NBP[1]351*	0.0000	0.0000	0.0000	0.0000	0.0000	0.0000
NBP[1]377*	0.0000	0.0000	0.0000	0.0000	0.0000	0.0000
NBP[1]402*	0.0000	0.0000	0.0000	0.0000	0.0000	0.0000
NBP[1]428*	0.0000	0.0000	0.0000	0.0000	0.0000	0.0000
NBP[1]454*	0.0000	0.0000	0.0000	0.0000	0.0000	0.0000
NBP[1]480*	0.0000	0.0000	0.0000	0.0000	0.0000	0.0000
NBP[1]505*	0.0000	0.0000	0.0000	0.0000	0.0000	0.0000
NBP[1]531*	0.0000	0.0000	0.0000	0.0000	0.0000	0.0000
NBP[1]557*	0.0000	0.0000	0.0000	0.0000	0.0000	0.0000
NBP[1]582*	0.0000	0.0000	0.0000	0.0000	0.0000	0.0000
NBP[1]608*	0.0000	0.0000	0.0000	0.0000	0.0000	0.0000
NBP[1]634*	0.0000	0.0000	0.0000	0.0000	0.0000	0.0000
NBP[1]659*	0.0000	0.0000	0.0000	0.0000	0.0000	0.0000
NBP[1]685*	0.0000	0.0000	0.0000	0.0000	0.0000	0.0000
NBP[1]711*	0.0000	0.0000	0.0000	0.0000	0.0000	0.0000
NBP[1]736*	0.0000	0.0000	0.0000	0.0000	0.0000	0.0000
NBP[1]762*	0.0000	0.0000	0.0000	0.0000	0.0000	0.0000
NBP[1]788*	0.0000	0.0000	0.0000	0.0000	0.0000	0.0000
NBP[1]825*	0.0000	0.0000	0.0000	0.0000	0.0000	0.0000
NBP[1]873*	0.0000	0.0000	0.0000	0.0000	0.0000	0.0000
NBP[1]926*	0.0000	0.0000	0.0000	0.0000	0.0000	0.0000
NBP[1]978*	0.0000	0.0000	0.0000	0.0000	0.0000	0.0000
NBP[1]1021*	0.0000	0.0000	0.0000	0.0000	0.0000	0.0000
NBP[1]1075*	0.0000	0.0000	0.0000	0.0000	0.0000	0.0000
NBP[1]1123*	0.0000	0.0000	0.0000	0.0000	0.0000	0.0000
NBP[1]1173*	0.0000	0.0000	0.0000	0.0000	0.0000	0.0000
NBP[1]1250*	0.0000	0.0000	0.0000	0.0000	0.0000	0.0000
NBP[1]1339*	0.0000	0.0000	0.0000	0.0000	0.0000	0.0000
NBP[1]1432*	0.0000	0.0000	0.0000	0.0000	0.0000	0.0000
NBP[1]1528*	0.0000	0.0000	0.0000	0.0000	0.0000	0.0000
NBP[1]1637*	0.0000	0.0000	0.0000	0.0000	0.0000	0.0000
NBP[1]1732*	0.0000	0.0000	0.0000	0.0000	0.0000	0.0000
NBP[1]1819*	0.0000	0.0000	0.0000	0.0000	0.0000	0.0000
NBP[1]1913*	0.0000	0.0000	0.0000	0.0000	0.0000	0.0000
Total	0.0000	1.0000	0.0000	1.0000	0.0000	1.0000

* Specified by user.

Material Stream: Sinjhoro Plant-

Fluid Package: Basis-1
Property Package: Peng-Robinson

CONDITIONS

	Overall	Vapour Phase	Liquid Phase	Aqueous Phase
Vapour / Phase Fraction	0.6677	0.6677	0.0609	0.2714
Temperature: (F)	103.7	103.7	103.7	103.7
Pressure: (psig)	1240	1240	1240	1240
Molar Flow (MMSCFD)	7.874	5.257	0.4795	2.137
Mass Flow (tonne/d)	237.5	135.4	56.14	46.06
Std Ideal Liq Vol Flow (barrel/day)	3142	2353	499.4	290.4
Molar Enthalpy (kJ/kgmole)	-1.519e+005	-9.030e+004	-2.342e+005	-2.850e+005
Molar Entropy (kJ/kgmole-C)	127.6	149.2	204.1	57.43
Heat Flow (MMBtu/hr)	-56.46	-22.41	-5.301	-28.75
Liq Vol Flow @Std Cond (barrel/day)	2.954e+005 *	9.308e+005	477.9	285.4

PROPERTIES

	Overall	Vapour Phase	Liquid Phase	Aqueous Phase
Molecular Weight	25.24	21.54	97.94	18.03
Molar Density (kgmole/m3)	5.931	4.298	7.278	55.40
Mass Density (kg/m3)	149.7	92.57	712.8	999.0
Act. Volume Flow (barrel/day)	9982	9196	495.3	290.0
Mass Enthalpy (kJ/kg)	-6018	-4193	-2391	-1.580e+004
Mass Entropy (kJ/kg-C)	5.056	6.926	2.084	3.185
Heat Capacity (kJ/kgmole-C)	73.90	60.24	207.3	77.56
Mass Heat Capacity (kJ/kg-C)	2.928	2.797	2.117	4.301
LHV Molar Basis (Std) (Btu/SCF)	---	---	---	6.729e-004
LHV Mass Basis (Std) (kJ/kg)	---	---	---	3.293e-002
Phase Fraction [Vol. Basis]	0.7487	0.7487	0.1589	9.241e-002
Phase Fraction [Mass Basis]	0.5698	0.5698	0.2363	0.1939
Partial Pressure of CO2 (psig)	27.31	---	---	---
Cost Based on Flow (Cost/s)	0.0000	0.0000	0.0000	0.0000
Act. Gas Flow (ACT_m3/h)	60.92	60.92	---	---
Avg. Liq. Density (kgmole/m3)	18.84	16.80	7.219	55.32
Specific Heat (kJ/kgmole-C)	73.90	60.24	207.3	77.56
Std. Gas Flow (STD_m3/h)	9272	6191	564.7	2516
Std. Ideal Liq. Mass Density (kg/m3)	475.5	361.9	707.0	997.6
Act. Liq. Flow (barrel/day)	785.3	---	495.3	290.0
Z Factor	---	0.7734	0.4567	6.000e-002
Watson K	15.58	17.21	12.19	8.487
User Property	---	---	---	---
Partial Pressure of H2S (psig)	-14.69	---	---	---
Cp/(Cp - R)	1.127	1.160	1.042	1.120
Cp/Cv	1.294	1.679	1.276	1.154
Heat of Vap. (kJ/kgmole)	6.371e+004	---	---	---
Kinematic Viscosity (cSt)	---	0.1603	2.789	0.6541
Liq. Mass Density (Std. Cond) (kg/m3)	5.058	0.9146	738.8	1015
Liq. Vol. Flow (Std. Cond) (barrel/day)	2.954e+005	9.308e+005	477.9	285.4
Liquid Fraction	0.3323	0.0000	1.000	1.000
Molar Volume (m3/kgmole)	0.1686	0.2327	0.1374	1.805e-002
Mass Heat of Vap. (kJ/kg)	2524	---	---	---
Phase Fraction [Molar Basis]	0.6677	0.6677	0.0609	0.2714
Surface Tension (dyne/cm)	---	---	11.02	69.47
Thermal Conductivity (W/m-K)	---	4.133e-002	8.918e-002	0.6313
Viscosity (cP)	---	1.484e-002	1.988	0.6535
Cv (Semi-Ideal) (kJ/kgmole-C)	65.58	51.93	199.0	69.24
Mass Cv (Semi-Ideal) (kJ/kg-C)	2.598	2.411	2.032	3.840
Cv (kJ/kgmole-C)	57.09	35.87	162.4	67.23
Mass Cv (kJ/kg-C)	2.262	1.666	1.658	3.728
Cv (Ent. Method) (kJ/kgmole-C)	---	---	173.2	66.52
Mass Cv (Ent. Method) (kJ/kg-C)	---	---	1.769	3.689
Cp/Cv (Ent. Method)	---	---	1.197	1.166

* Specified by user.

Material Stream: Sinjhoro Plant- (continued)

Fluid Package: Basis-1
Property Package: Peng-Robinson

PROPERTIES

	Overall	Vapour Phase	Liquid Phase	Aqueous Phase
Reid VP at 37.8 C (psig)	3319	---	253.3	---
True VP at 37.8 C (psig)	6318	2793	1222	124.6
Liq. Vol. Flow - Sum(Std. Cond) (barrel/day)	9.316e+005	9.308e+005	477.9	285.4
HHV Molar Basis (Std) (Btu/SCF)	---	---	---	46.43
HHV Mass Basis (Std) (kJ/kg)	---	---	---	2273
CO2 Loading	---	---	---	---
CO2 App ML Con (kgmole/m3)	---	---	0.1757	3.691e-002
CO2 App WT Con (kgmol/kg)	---	---	2.465e-004	3.695e-005
Phase Fraction [Act. Vol. Basis]	0.9213	0.9213	4.962e-002	2.905e-002
Mass Exergy (kJ/kg)	292.0	---	---	---
Viscosity Index	-28.88	---	---	---
Ideal Gas Cp/Cv	1.213	1.242	1.054	1.328
Ideal Gas Cp (kJ/kgmole-C)	47.44	42.63	161.6	33.67
Mass Ideal Gas Cp (kJ/kg-C)	1.880	1.979	1.650	1.867
Bubble Point Pressure (psig)	6329	---	---	---

COMPOSITION

Overall Phase

Vapour Fraction 0.6677

COMPONENTS	MOLAR FLOW (kgmole/h)	MOLE FRACTION	MASS FLOW (tonne/d)	MASS FRACTION	LIQUID VOLUME FLOW (m3/h)	LIQUID VOLUME FRACTION
Methane	207.0440	0.5280	79.7181	0.3356	11.0944	0.5330
Ethane	28.8006	0.0734	20.7848	0.0875	2.4348	0.1170
Propane	15.2677	0.0389	16.1583	0.0680	1.3288	0.0638
i-Butane	2.0287	0.0052	2.8300	0.0119	0.2098	0.0101
n-Butane	3.9513	0.0101	5.5120	0.0232	0.3938	0.0189
i-Pentane	0.8495	0.0022	1.4710	0.0062	0.0983	0.0047
n-Pentane	0.9602	0.0024	1.6627	0.0070	0.1100	0.0053
n-Hexane	1.4698	0.0037	3.0399	0.0128	0.1911	0.0092
Nitrogen	5.5989	0.0143	3.7642	0.0158	0.1945	0.0093
CO2	9.4151	0.0240	9.9445	0.0419	0.5020	0.0241
H2S	0.0006	0.0000	0.0005	0.0000	0.0000	0.0000
H2O	106.6990	0.2721	46.1326	0.1942	1.9261	0.0925
NBP[1]95*	0.2883	0.0007	0.4699	0.0020	0.0288	0.0014
NBP[1]121*	0.3381	0.0009	0.5912	0.0025	0.0358	0.0017
NBP[1]147*	0.4314	0.0011	0.8304	0.0035	0.0494	0.0024
NBP[1]171*	0.8224	0.0021	1.7306	0.0073	0.1013	0.0049
NBP[1]195*	1.0758	0.0027	2.4160	0.0102	0.1398	0.0067
NBP[1]222*	0.8003	0.0020	1.9331	0.0081	0.1105	0.0053
NBP[1]248*	0.6657	0.0017	1.7287	0.0073	0.0976	0.0047
NBP[1]273*	0.5358	0.0014	1.4881	0.0063	0.0831	0.0040
NBP[1]299*	0.4185	0.0011	1.2393	0.0052	0.0684	0.0033
NBP[1]325*	0.3029	0.0008	0.9528	0.0040	0.0521	0.0025
NBP[1]351*	0.2456	0.0006	0.8214	0.0035	0.0445	0.0021
NBP[1]377*	0.2247	0.0006	0.8014	0.0034	0.0429	0.0021
NBP[1]402*	0.2061	0.0005	0.7838	0.0033	0.0416	0.0020
NBP[1]428*	0.1961	0.0005	0.7956	0.0033	0.0418	0.0020
NBP[1]454*	0.1956	0.0005	0.8480	0.0036	0.0441	0.0021
NBP[1]480*	0.1982	0.0005	0.9182	0.0039	0.0473	0.0023
NBP[1]505*	0.1920	0.0005	0.9484	0.0040	0.0484	0.0023
NBP[1]531*	0.1852	0.0005	0.9740	0.0041	0.0492	0.0024
NBP[1]557*	0.1784	0.0005	0.9978	0.0042	0.0500	0.0024
NBP[1]582*	0.1706	0.0004	1.0132	0.0043	0.0503	0.0024
NBP[1]608*	0.1643	0.0004	1.0351	0.0044	0.0510	0.0025
NBP[1]634*	0.1611	0.0004	1.0753	0.0045	0.0526	0.0025
NBP[1]659*	0.1586	0.0004	1.1194	0.0047	0.0543	0.0026
NBP[1]685*	0.1641	0.0004	1.2227	0.0051	0.0588	0.0028

* Specified by user.

Material Stream: Sinjhoro Plant- (continued)

Fluid Package: Basis-1
Property Package: Peng-Robinson

COMPOSITION

Overall Phase (continued)

Vapour Fraction 0.6677

COMPONENTS	MOLAR FLOW (kgmole/h)	MOLE FRACTION	MASS FLOW (tonne/d)	MASS FRACTION	LIQUID VOLUME FLOW (m3/h)	LIQUID VOLUME FRACTION
NBP[1]711*	0.1715	0.0004	1.3445	0.0057	0.0642	0.0031
NBP[1]736*	0.1697	0.0004	1.3915	0.0059	0.0659	0.0032
NBP[1]762*	0.1653	0.0004	1.4214	0.0060	0.0669	0.0032
NBP[1]788*	0.1585	0.0004	1.4424	0.0061	0.0674	0.0032
NBP[1]825*	0.2655	0.0007	2.5963	0.0109	0.1201	0.0058
NBP[1]873*	0.1830	0.0005	1.9404	0.0082	0.0887	0.0043
NBP[1]926*	0.1437	0.0004	1.6472	0.0069	0.0744	0.0036
NBP[1]978*	0.1474	0.0004	1.8524	0.0078	0.0825	0.0040
NBP[1]1021*	0.0728	0.0002	0.9655	0.0041	0.0426	0.0020
NBP[1]1075*	0.0449	0.0001	0.6310	0.0027	0.0276	0.0013
NBP[1]1123*	0.0417	0.0001	0.6267	0.0026	0.0271	0.0013
NBP[1]1173*	0.0300	0.0001	0.4772	0.0020	0.0205	0.0010
NBP[1]1250*	0.0393	0.0001	0.6767	0.0028	0.0287	0.0014
NBP[1]1339*	0.0364	0.0001	0.6999	0.0029	0.0291	0.0014
NBP[1]1432*	0.0257	0.0001	0.5397	0.0023	0.0221	0.0011
NBP[1]1528*	0.0180	0.0000	0.4082	0.0017	0.0165	0.0008
NBP[1]1637*	0.0127	0.0000	0.3047	0.0013	0.0122	0.0006
NBP[1]1732*	0.0101	0.0000	0.2565	0.0011	0.0101	0.0005
NBP[1]1819*	0.0097	0.0000	0.2590	0.0011	0.0101	0.0005
NBP[1]1913*	0.0112	0.0000	0.3148	0.0013	0.0121	0.0006
Total	392.1623	1.0000	237.5489	1.0000	20.8162	1.0000

Vapour Phase

Phase Fraction 0.6677

COMPONENTS	MOLAR FLOW (kgmole/h)	MOLE FRACTION	MASS FLOW (tonne/d)	MASS FRACTION	LIQUID VOLUME FLOW (m3/h)	LIQUID VOLUME FRACTION
Methane	200.8215	0.7669	77.3222	0.5713	10.7609	0.6905
Ethane	26.4625	0.1011	19.0974	0.1411	2.2372	0.1436
Propane	12.8025	0.0489	13.5493	0.1001	1.1142	0.0715
i-Butane	1.5141	0.0058	2.1121	0.0156	0.1566	0.0100
n-Butane	2.7785	0.0106	3.8760	0.0286	0.2769	0.0178
i-Pentane	0.4876	0.0019	0.8444	0.0062	0.0564	0.0036
n-Pentane	0.5076	0.0019	0.8790	0.0065	0.0582	0.0037
n-Hexane	0.5168	0.0020	1.0690	0.0079	0.0672	0.0043
Nitrogen	5.5094	0.0210	3.7041	0.0274	0.1914	0.0123
CO2	8.7675	0.0335	9.2605	0.0684	0.4675	0.0300
H2S	0.0005	0.0000	0.0004	0.0000	0.0000	0.0000
H2O	0.3222	0.0012	0.1393	0.0010	0.0058	0.0004
NBP[1]95*	0.1531	0.0006	0.2496	0.0018	0.0153	0.0010
NBP[1]121*	0.1541	0.0006	0.2694	0.0020	0.0163	0.0010
NBP[1]147*	0.1632	0.0006	0.3141	0.0023	0.0187	0.0012
NBP[1]171*	0.2542	0.0010	0.5348	0.0040	0.0313	0.0020
NBP[1]195*	0.2654	0.0010	0.5960	0.0044	0.0345	0.0022
NBP[1]222*	0.1470	0.0006	0.3550	0.0026	0.0203	0.0013
NBP[1]248*	0.0897	0.0003	0.2331	0.0017	0.0132	0.0008
NBP[1]273*	0.0518	0.0002	0.1440	0.0011	0.0080	0.0005
NBP[1]299*	0.0284	0.0001	0.0841	0.0006	0.0046	0.0003
NBP[1]325*	0.0139	0.0001	0.0439	0.0003	0.0024	0.0002
NBP[1]351*	0.0075	0.0000	0.0251	0.0002	0.0014	0.0001
NBP[1]377*	0.0044	0.0000	0.0157	0.0001	0.0008	0.0001
NBP[1]402*	0.0026	0.0000	0.0098	0.0001	0.0005	0.0000
NBP[1]428*	0.0015	0.0000	0.0062	0.0000	0.0003	0.0000
NBP[1]454*	0.0009	0.0000	0.0040	0.0000	0.0002	0.0000
NBP[1]480*	0.0006	0.0000	0.0026	0.0000	0.0001	0.0000
NBP[1]505*	0.0003	0.0000	0.0016	0.0000	0.0001	0.0000

* Specified by user.

Material Stream: Sinjhoro Plant- (continued)

Fluid Package: Basis-1
Property Package: Peng-Robinson

COMPOSITION

Vapour Phase (continued)

Phase Fraction 0.6677

COMPONENTS	MOLAR FLOW (kgmole/h)	MOLE FRACTION	MASS FLOW (tonne/d)	MASS FRACTION	LIQUID VOLUME FLOW (m3/h)	LIQUID VOLUME FRACTION
NBP[1]531*	0.0002	0.0000	0.0010	0.0000	0.0000	0.0000
NBP[1]557*	0.0001	0.0000	0.0006	0.0000	0.0000	0.0000
NBP[1]582*	0.0001	0.0000	0.0003	0.0000	0.0000	0.0000
NBP[1]608*	0.0000	0.0000	0.0002	0.0000	0.0000	0.0000
NBP[1]634*	0.0000	0.0000	0.0001	0.0000	0.0000	0.0000
NBP[1]659*	0.0000	0.0000	0.0001	0.0000	0.0000	0.0000
NBP[1]685*	0.0000	0.0000	0.0000	0.0000	0.0000	0.0000
NBP[1]711*	0.0000	0.0000	0.0000	0.0000	0.0000	0.0000
NBP[1]736*	0.0000	0.0000	0.0000	0.0000	0.0000	0.0000
NBP[1]762*	0.0000	0.0000	0.0000	0.0000	0.0000	0.0000
NBP[1]788*	0.0000	0.0000	0.0000	0.0000	0.0000	0.0000
NBP[1]825*	0.0000	0.0000	0.0000	0.0000	0.0000	0.0000
NBP[1]873*	0.0000	0.0000	0.0000	0.0000	0.0000	0.0000
NBP[1]926*	0.0000	0.0000	0.0000	0.0000	0.0000	0.0000
NBP[1]978*	0.0000	0.0000	0.0000	0.0000	0.0000	0.0000
NBP[1]1021*	0.0000	0.0000	0.0000	0.0000	0.0000	0.0000
NBP[1]1075*	0.0000	0.0000	0.0000	0.0000	0.0000	0.0000
NBP[1]1123*	0.0000	0.0000	0.0000	0.0000	0.0000	0.0000
NBP[1]1173*	0.0000	0.0000	0.0000	0.0000	0.0000	0.0000
NBP[1]1250*	0.0000	0.0000	0.0000	0.0000	0.0000	0.0000
NBP[1]1339*	0.0000	0.0000	0.0000	0.0000	0.0000	0.0000
NBP[1]1432*	0.0000	0.0000	0.0000	0.0000	0.0000	0.0000
NBP[1]1528*	0.0000	0.0000	0.0000	0.0000	0.0000	0.0000
NBP[1]1637*	0.0000	0.0000	0.0000	0.0000	0.0000	0.0000
NBP[1]1732*	0.0013	0.0000	0.0335	0.0002	0.0013	0.0001
NBP[1]1819*	0.0097	0.0000	0.2590	0.0019	0.0101	0.0006
NBP[1]1913*	0.0112	0.0000	0.3148	0.0023	0.0121	0.0008
Total	261.8521	1.0000	135.3521	1.0000	15.5841	1.0000

Liquid Phase

Phase Fraction 6.090e-002

COMPONENTS	MOLAR FLOW (kgmole/h)	MOLE FRACTION	MASS FLOW (tonne/d)	MASS FRACTION	LIQUID VOLUME FLOW (m3/h)	LIQUID VOLUME FRACTION
Methane	6.2224	0.2605	2.3958	0.0427	0.3334	0.1008
Ethane	2.3381	0.0979	1.6874	0.0301	0.1977	0.0597
Propane	2.4652	0.1032	2.6090	0.0465	0.2146	0.0649
i-Butane	0.5146	0.0215	0.7178	0.0128	0.0532	0.0161
n-Butane	1.1728	0.0491	1.6360	0.0291	0.1169	0.0353
i-Pentane	0.3619	0.0152	0.6266	0.0112	0.0419	0.0127
n-Pentane	0.4526	0.0190	0.7837	0.0140	0.0519	0.0157
n-Hexane	0.9530	0.0399	1.9710	0.0351	0.1239	0.0375
Nitrogen	0.0874	0.0037	0.0588	0.0010	0.0030	0.0009
CO2	0.5767	0.0241	0.6091	0.0109	0.0307	0.0093
H2S	0.0001	0.0000	0.0001	0.0000	0.0000	0.0000
H2O	0.0226	0.0009	0.0098	0.0002	0.0004	0.0001
NBP[1]95*	0.1352	0.0057	0.2204	0.0039	0.0135	0.0041
NBP[1]121*	0.1841	0.0077	0.3218	0.0057	0.0195	0.0059
NBP[1]147*	0.2683	0.0112	0.5163	0.0092	0.0307	0.0093
NBP[1]171*	0.5683	0.0238	1.1957	0.0213	0.0700	0.0212
NBP[1]195*	0.8104	0.0339	1.8200	0.0324	0.1053	0.0318
NBP[1]222*	0.6534	0.0274	1.5781	0.0281	0.0902	0.0273
NBP[1]248*	0.5759	0.0241	1.4957	0.0266	0.0845	0.0255
NBP[1]273*	0.4840	0.0203	1.3442	0.0239	0.0750	0.0227
NBP[1]299*	0.3901	0.0163	1.1552	0.0206	0.0638	0.0193
NBP[1]325*	0.2889	0.0121	0.9089	0.0162	0.0497	0.0150

* Specified by user.

Material Stream: Sinjhoro Plant- (continued)

Fluid Package: Basis-1
Property Package: Peng-Robinson

COMPOSITION

Liquid Phase (continued)

Phase Fraction 6.090e-002

COMPONENTS	MOLAR FLOW (kgmole/h)	MOLE FRACTION	MASS FLOW (tonne/d)	MASS FRACTION	LIQUID VOLUME FLOW (m3/h)	LIQUID VOLUME FRACTION
NBP[1]351*	0.2381	0.0100	0.7963	0.0142	0.0431	0.0130
NBP[1]377*	0.2203	0.0092	0.7857	0.0140	0.0421	0.0127
NBP[1]402*	0.2035	0.0085	0.7740	0.0138	0.0411	0.0124
NBP[1]428*	0.1946	0.0081	0.7894	0.0141	0.0415	0.0125
NBP[1]454*	0.1946	0.0081	0.8440	0.0150	0.0439	0.0133
NBP[1]480*	0.1976	0.0083	0.9155	0.0163	0.0471	0.0142
NBP[1]505*	0.1917	0.0080	0.9468	0.0169	0.0483	0.0146
NBP[1]531*	0.1850	0.0077	0.9731	0.0173	0.0492	0.0149
NBP[1]557*	0.1783	0.0075	0.9973	0.0178	0.0500	0.0151
NBP[1]582*	0.1705	0.0071	1.0129	0.0180	0.0503	0.0152
NBP[1]608*	0.1643	0.0069	1.0349	0.0184	0.0510	0.0154
NBP[1]634*	0.1611	0.0067	1.0752	0.0192	0.0526	0.0159
NBP[1]659*	0.1586	0.0066	1.1194	0.0199	0.0543	0.0164
NBP[1]685*	0.1641	0.0069	1.2227	0.0218	0.0588	0.0178
NBP[1]711*	0.1715	0.0072	1.3445	0.0239	0.0642	0.0194
NBP[1]736*	0.1697	0.0071	1.3915	0.0248	0.0659	0.0199
NBP[1]762*	0.1653	0.0069	1.4214	0.0253	0.0669	0.0202
NBP[1]788*	0.1585	0.0066	1.4424	0.0257	0.0674	0.0204
NBP[1]825*	0.2655	0.0111	2.5963	0.0462	0.1201	0.0363
NBP[1]873*	0.1830	0.0077	1.9404	0.0346	0.0887	0.0268
NBP[1]926*	0.1437	0.0060	1.6472	0.0293	0.0744	0.0225
NBP[1]978*	0.1474	0.0062	1.8524	0.0330	0.0825	0.0249
NBP[1]1021*	0.0728	0.0030	0.9655	0.0172	0.0426	0.0129
NBP[1]1075*	0.0449	0.0019	0.6310	0.0112	0.0276	0.0083
NBP[1]1123*	0.0417	0.0017	0.6267	0.0112	0.0271	0.0082
NBP[1]1173*	0.0300	0.0013	0.4772	0.0085	0.0205	0.0062
NBP[1]1250*	0.0393	0.0016	0.6767	0.0121	0.0287	0.0087
NBP[1]1339*	0.0364	0.0015	0.6999	0.0125	0.0291	0.0088
NBP[1]1432*	0.0257	0.0011	0.5397	0.0096	0.0221	0.0067
NBP[1]1528*	0.0180	0.0008	0.4082	0.0073	0.0165	0.0050
NBP[1]1637*	0.0127	0.0005	0.3047	0.0054	0.0122	0.0037
NBP[1]1732*	0.0088	0.0004	0.2230	0.0040	0.0088	0.0027
NBP[1]1819*	0.0000	0.0000	0.0000	0.0000	0.0000	0.0000
NBP[1]1913*	0.0000	0.0000	0.0000	0.0000	0.0000	0.0000
Total	23.8829	1.0000	56.1370	1.0000	3.3084	1.0000

Aqueous Phase

Phase Fraction 0.2714

COMPONENTS	MOLAR FLOW (kgmole/h)	MOLE FRACTION	MASS FLOW (tonne/d)	MASS FRACTION	LIQUID VOLUME FLOW (m3/h)	LIQUID VOLUME FRACTION
Methane	0.0001	0.0000	0.0000	0.0000	0.0000	0.0000
Ethane	0.0000	0.0000	0.0000	0.0000	0.0000	0.0000
Propane	0.0000	0.0000	0.0000	0.0000	0.0000	0.0000
i-Butane	0.0000	0.0000	0.0000	0.0000	0.0000	0.0000
n-Butane	0.0000	0.0000	0.0000	0.0000	0.0000	0.0000
i-Pentane	0.0000	0.0000	0.0000	0.0000	0.0000	0.0000
n-Pentane	0.0000	0.0000	0.0000	0.0000	0.0000	0.0000
n-Hexane	0.0000	0.0000	0.0000	0.0000	0.0000	0.0000
Nitrogen	0.0020	0.0000	0.0014	0.0000	0.0001	0.0000
CO2	0.0709	0.0007	0.0749	0.0016	0.0038	0.0020
H2S	0.0000	0.0000	0.0000	0.0000	0.0000	0.0000
H2O	106.3542	0.9993	45.9836	0.9983	1.9198	0.9980
NBP[1]95*	0.0000	0.0000	0.0000	0.0000	0.0000	0.0000
NBP[1]121*	0.0000	0.0000	0.0000	0.0000	0.0000	0.0000
NBP[1]147*	0.0000	0.0000	0.0000	0.0000	0.0000	0.0000

* Specified by user.

Material Stream: Sinjhoro Plant- (continued)

Fluid Package: Basis-1
Property Package: Peng-Robinson

COMPOSITION

Aqueous Phase (continued)

Phase Fraction 0.2714

COMPONENTS	MOLAR FLOW (kgmole/h)	MOLE FRACTION	MASS FLOW (tonne/d)	MASS FRACTION	LIQUID VOLUME FLOW (m3/h)	LIQUID VOLUME FRACTION
NBP[1]171*	0.0000	0.0000	0.0000	0.0000	0.0000	0.0000
NBP[1]195*	0.0000	0.0000	0.0000	0.0000	0.0000	0.0000
NBP[1]222*	0.0000	0.0000	0.0000	0.0000	0.0000	0.0000
NBP[1]248*	0.0000	0.0000	0.0000	0.0000	0.0000	0.0000
NBP[1]273*	0.0000	0.0000	0.0000	0.0000	0.0000	0.0000
NBP[1]299*	0.0000	0.0000	0.0000	0.0000	0.0000	0.0000
NBP[1]325*	0.0000	0.0000	0.0000	0.0000	0.0000	0.0000
NBP[1]351*	0.0000	0.0000	0.0000	0.0000	0.0000	0.0000
NBP[1]377*	0.0000	0.0000	0.0000	0.0000	0.0000	0.0000
NBP[1]402*	0.0000	0.0000	0.0000	0.0000	0.0000	0.0000
NBP[1]428*	0.0000	0.0000	0.0000	0.0000	0.0000	0.0000
NBP[1]454*	0.0000	0.0000	0.0000	0.0000	0.0000	0.0000
NBP[1]480*	0.0000	0.0000	0.0000	0.0000	0.0000	0.0000
NBP[1]505*	0.0000	0.0000	0.0000	0.0000	0.0000	0.0000
NBP[1]531*	0.0000	0.0000	0.0000	0.0000	0.0000	0.0000
NBP[1]557*	0.0000	0.0000	0.0000	0.0000	0.0000	0.0000
NBP[1]582*	0.0000	0.0000	0.0000	0.0000	0.0000	0.0000
NBP[1]608*	0.0000	0.0000	0.0000	0.0000	0.0000	0.0000
NBP[1]634*	0.0000	0.0000	0.0000	0.0000	0.0000	0.0000
NBP[1]659*	0.0000	0.0000	0.0000	0.0000	0.0000	0.0000
NBP[1]685*	0.0000	0.0000	0.0000	0.0000	0.0000	0.0000
NBP[1]711*	0.0000	0.0000	0.0000	0.0000	0.0000	0.0000
NBP[1]736*	0.0000	0.0000	0.0000	0.0000	0.0000	0.0000
NBP[1]762*	0.0000	0.0000	0.0000	0.0000	0.0000	0.0000
NBP[1]788*	0.0000	0.0000	0.0000	0.0000	0.0000	0.0000
NBP[1]825*	0.0000	0.0000	0.0000	0.0000	0.0000	0.0000
NBP[1]873*	0.0000	0.0000	0.0000	0.0000	0.0000	0.0000
NBP[1]926*	0.0000	0.0000	0.0000	0.0000	0.0000	0.0000
NBP[1]978*	0.0000	0.0000	0.0000	0.0000	0.0000	0.0000
NBP[1]1021*	0.0000	0.0000	0.0000	0.0000	0.0000	0.0000
NBP[1]1075*	0.0000	0.0000	0.0000	0.0000	0.0000	0.0000
NBP[1]1123*	0.0000	0.0000	0.0000	0.0000	0.0000	0.0000
NBP[1]1173*	0.0000	0.0000	0.0000	0.0000	0.0000	0.0000
NBP[1]1250*	0.0000	0.0000	0.0000	0.0000	0.0000	0.0000
NBP[1]1339*	0.0000	0.0000	0.0000	0.0000	0.0000	0.0000
NBP[1]1432*	0.0000	0.0000	0.0000	0.0000	0.0000	0.0000
NBP[1]1528*	0.0000	0.0000	0.0000	0.0000	0.0000	0.0000
NBP[1]1637*	0.0000	0.0000	0.0000	0.0000	0.0000	0.0000
NBP[1]1732*	0.0000	0.0000	0.0000	0.0000	0.0000	0.0000
NBP[1]1819*	0.0000	0.0000	0.0000	0.0000	0.0000	0.0000
NBP[1]1913*	0.0000	0.0000	0.0000	0.0000	0.0000	0.0000
Total	106.4272	1.0000	46.0598	1.0000	1.9237	1.0000

Material Stream: Water-PRD

Fluid Package: Basis-1
Property Package: Peng-Robinson

CONDITIONS

		Overall
Vapour / Phase Fraction		---
Temperature:	(F)	---
Pressure:	(psig)	450.0 *
Molar Flow	(MMSCFD)	2.142
Mass Flow	(tonne/d)	46.13
Std Ideal Liq Vol Flow	(barrel/day)	290.7

* Specified by user.

Material Stream: Water-PRD (continued)

Fluid Package: Basis-1
Property Package: Peng-Robinson

CONDITIONS

	Overall
Molar Enthalpy (kJ/kgmole)	---
Molar Entropy (kJ/kgmole-C)	---
Heat Flow (MMBtu/hr)	---
Liq Vol Flow @Std Cond (barrel/day)	285.9 *

PROPERTIES

	Overall
Molecular Weight	18.02
Molar Density (kgmole/m3)	---
Mass Density (kg/m3)	---
Act. Volume Flow (barrel/day)	---
Mass Enthalpy (kJ/kg)	---
Mass Entropy (kJ/kg-C)	---
Heat Capacity (kJ/kgmole-C)	---
Mass Heat Capacity (kJ/kg-C)	---
LHV Molar Basis (Std) (Btu/SCF)	0.0000
LHV Mass Basis (Std) (kJ/kg)	0.0000
Phase Fraction [Vol. Basis]	0.0000
Phase Fraction [Mass Basis]	0.0000
Partial Pressure of CO2 (psig)	-14.70
Cost Based on Flow (Cost/s)	0.0000
Act. Gas Flow (ACT_m3/h)	---
Avg. Liq. Density (kgmole/m3)	55.40
Specific Heat (kJ/kgmole-C)	---
Std. Gas Flow (STD_m3/h)	2523
Std. Ideal Liq. Mass Density (kg/m3)	998.0
Act. Liq. Flow (barrel/day)	---
Z Factor	---
Watson K	---
User Property	---
Partial Pressure of H2S (psig)	-14.70
Cp/(Cp - R)	---
Cp/Cv	---
Heat of Vap. (kJ/kgmole)	---
Kinematic Viscosity (cSt)	---
Liq. Mass Density (Std. Cond) (kg/m3)	1015
Liq. Vol. Flow (Std. Cond) (barrel/day)	285.9
Liquid Fraction	---
Molar Volume (m3/kgmole)	---
Mass Heat of Vap. (kJ/kg)	---
Phase Fraction [Molar Basis]	---
Surface Tension (dyne/cm)	---
Thermal Conductivity (W/m-K)	---
Viscosity (cP)	---
Cv (Semi-Ideal) (kJ/kgmole-C)	---
Mass Cv (Semi-Ideal) (kJ/kg-C)	---
Cv (kJ/kgmole-C)	---
Mass Cv (kJ/kg-C)	---
Cv (Ent. Method) (kJ/kgmole-C)	---
Mass Cv (Ent. Method) (kJ/kg-C)	---
Cp/Cv (Ent. Method)	---
Reid VP at 37.8 C (psig)	---
True VP at 37.8 C (psig)	---
Liq. Vol. Flow - Sum(Std. Cond) (barrel/day)	0.0000
HHV Molar Basis (Std) (Btu/SCF)	46.46
HHV Mass Basis (Std) (kJ/kg)	2276
CO2 Loading	---

* Specified by user.

Material Stream: Water-PRD (continued)

Fluid Package: Basis-1
Property Package: Peng-Robinson

PROPERTIES

		Overall				
CO2 App ML Con	(kgmole/m3)	---				
CO2 App WT Con	(kgmol/kg)	0.0000				
Phase Fraction [Act. Vol. Basis]		0.0000				
Mass Exergy	(kJ/kg)	9.753e+006				
Viscosity Index		---				
Ideal Gas Cp/Cv		1.000				
Ideal Gas Cp	(kJ/kgmole-C)	1.170e+007				
Mass Ideal Gas Cp	(kJ/kg-C)	6.496e+005				
Bubble Point Pressure	(psig)	---				

COMPOSITION

Overall Phase

Vapour Fraction ---

COMPONENTS	MOLAR FLOW (kgmole/h)	MOLE FRACTION	MASS FLOW (tonne/d)	MASS FRACTION	LIQUID VOLUME FLOW (m3/h)	LIQUID VOLUME FRACTION
Methane	0.0000 *	0.0000 *	0.0000 *	0.0000 *	0.0000 *	0.0000 *
Ethane	0.0000 *	0.0000 *	0.0000 *	0.0000 *	0.0000 *	0.0000 *
Propane	0.0000 *	0.0000 *	0.0000 *	0.0000 *	0.0000 *	0.0000 *
i-Butane	0.0000 *	0.0000 *	0.0000 *	0.0000 *	0.0000 *	0.0000 *
n-Butane	0.0000 *	0.0000 *	0.0000 *	0.0000 *	0.0000 *	0.0000 *
i-Pentane	0.0000 *	0.0000 *	0.0000 *	0.0000 *	0.0000 *	0.0000 *
n-Pentane	0.0000 *	0.0000 *	0.0000 *	0.0000 *	0.0000 *	0.0000 *
n-Hexane	0.0000 *	0.0000 *	0.0000 *	0.0000 *	0.0000 *	0.0000 *
Nitrogen	0.0000 *	0.0000 *	0.0000 *	0.0000 *	0.0000 *	0.0000 *
CO2	0.0000 *	0.0000 *	0.0000 *	0.0000 *	0.0000 *	0.0000 *
H2S	0.0000 *	0.0000 *	0.0000 *	0.0000 *	0.0000 *	0.0000 *
H2O	106.6873 *	1.0000 *	46.1276 *	1.0000 *	1.9259 *	1.0000 *
NBP[1]95*	0.0000 *	0.0000 *	0.0000 *	0.0000 *	0.0000 *	0.0000 *
NBP[1]121*	0.0000 *	0.0000 *	0.0000 *	0.0000 *	0.0000 *	0.0000 *
NBP[1]147*	0.0000 *	0.0000 *	0.0000 *	0.0000 *	0.0000 *	0.0000 *
NBP[1]171*	0.0000 *	0.0000 *	0.0000 *	0.0000 *	0.0000 *	0.0000 *
NBP[1]195*	0.0000 *	0.0000 *	0.0000 *	0.0000 *	0.0000 *	0.0000 *
NBP[1]222*	0.0000 *	0.0000 *	0.0000 *	0.0000 *	0.0000 *	0.0000 *
NBP[1]248*	0.0000 *	0.0000 *	0.0000 *	0.0000 *	0.0000 *	0.0000 *
NBP[1]273*	0.0000 *	0.0000 *	0.0000 *	0.0000 *	0.0000 *	0.0000 *
NBP[1]299*	0.0000 *	0.0000 *	0.0000 *	0.0000 *	0.0000 *	0.0000 *
NBP[1]325*	0.0000 *	0.0000 *	0.0000 *	0.0000 *	0.0000 *	0.0000 *
NBP[1]351*	0.0000 *	0.0000 *	0.0000 *	0.0000 *	0.0000 *	0.0000 *
NBP[1]377*	0.0000 *	0.0000 *	0.0000 *	0.0000 *	0.0000 *	0.0000 *
NBP[1]402*	0.0000 *	0.0000 *	0.0000 *	0.0000 *	0.0000 *	0.0000 *
NBP[1]428*	0.0000 *	0.0000 *	0.0000 *	0.0000 *	0.0000 *	0.0000 *
NBP[1]454*	0.0000 *	0.0000 *	0.0000 *	0.0000 *	0.0000 *	0.0000 *
NBP[1]480*	0.0000 *	0.0000 *	0.0000 *	0.0000 *	0.0000 *	0.0000 *
NBP[1]505*	0.0000 *	0.0000 *	0.0000 *	0.0000 *	0.0000 *	0.0000 *
NBP[1]531*	0.0000 *	0.0000 *	0.0000 *	0.0000 *	0.0000 *	0.0000 *
NBP[1]557*	0.0000 *	0.0000 *	0.0000 *	0.0000 *	0.0000 *	0.0000 *
NBP[1]582*	0.0000 *	0.0000 *	0.0000 *	0.0000 *	0.0000 *	0.0000 *
NBP[1]608*	0.0000 *	0.0000 *	0.0000 *	0.0000 *	0.0000 *	0.0000 *
NBP[1]634*	0.0000 *	0.0000 *	0.0000 *	0.0000 *	0.0000 *	0.0000 *
NBP[1]659*	0.0000 *	0.0000 *	0.0000 *	0.0000 *	0.0000 *	0.0000 *
NBP[1]685*	0.0000 *	0.0000 *	0.0000 *	0.0000 *	0.0000 *	0.0000 *
NBP[1]711*	0.0000 *	0.0000 *	0.0000 *	0.0000 *	0.0000 *	0.0000 *
NBP[1]736*	0.0000 *	0.0000 *	0.0000 *	0.0000 *	0.0000 *	0.0000 *
NBP[1]762*	0.0000 *	0.0000 *	0.0000 *	0.0000 *	0.0000 *	0.0000 *
NBP[1]788*	0.0000 *	0.0000 *	0.0000 *	0.0000 *	0.0000 *	0.0000 *
NBP[1]825*	0.0000 *	0.0000 *	0.0000 *	0.0000 *	0.0000 *	0.0000 *
NBP[1]873*	0.0000 *	0.0000 *	0.0000 *	0.0000 *	0.0000 *	0.0000 *

* Specified by user.

Material Stream: Water-PRD (continued)

Fluid Package: Basis-1
Property Package: Peng-Robinson

COMPOSITION

Overall Phase (continued)

Vapour Fraction ---

COMPONENTS	MOLAR FLOW (kgmole/h)	MOLE FRACTION	MASS FLOW (tonne/d)	MASS FRACTION	LIQUID VOLUME FLOW (m3/h)	LIQUID VOLUME FRACTION
NBP[1]926*	0.0000 *	0.0000 *	0.0000 *	0.0000 *	0.0000 *	0.0000 *
NBP[1]978*	0.0000 *	0.0000 *	0.0000 *	0.0000 *	0.0000 *	0.0000 *
NBP[1]1021*	0.0000 *	0.0000 *	0.0000 *	0.0000 *	0.0000 *	0.0000 *
NBP[1]1075*	0.0000 *	0.0000 *	0.0000 *	0.0000 *	0.0000 *	0.0000 *
NBP[1]1123*	0.0000 *	0.0000 *	0.0000 *	0.0000 *	0.0000 *	0.0000 *
NBP[1]1173*	0.0000 *	0.0000 *	0.0000 *	0.0000 *	0.0000 *	0.0000 *
NBP[1]1250*	0.0000 *	0.0000 *	0.0000 *	0.0000 *	0.0000 *	0.0000 *
NBP[1]1339*	0.0000 *	0.0000 *	0.0000 *	0.0000 *	0.0000 *	0.0000 *
NBP[1]1432*	0.0000 *	0.0000 *	0.0000 *	0.0000 *	0.0000 *	0.0000 *
NBP[1]1528*	0.0000 *	0.0000 *	0.0000 *	0.0000 *	0.0000 *	0.0000 *
NBP[1]1637*	0.0000 *	0.0000 *	0.0000 *	0.0000 *	0.0000 *	0.0000 *
NBP[1]1732*	0.0000 *	0.0000 *	0.0000 *	0.0000 *	0.0000 *	0.0000 *
NBP[1]1819*	0.0000 *	0.0000 *	0.0000 *	0.0000 *	0.0000 *	0.0000 *
NBP[1]1913*	0.0000 *	0.0000 *	0.0000 *	0.0000 *	0.0000 *	0.0000 *
Total	106.6873	1.0000	46.1276	1.0000	1.9259	1.0000

Licensed to: PETROCHEMICAL ENGINEERIN
* Specified by user.

ANNEXURE-F

MP Separation @ 650 psig with new line heater

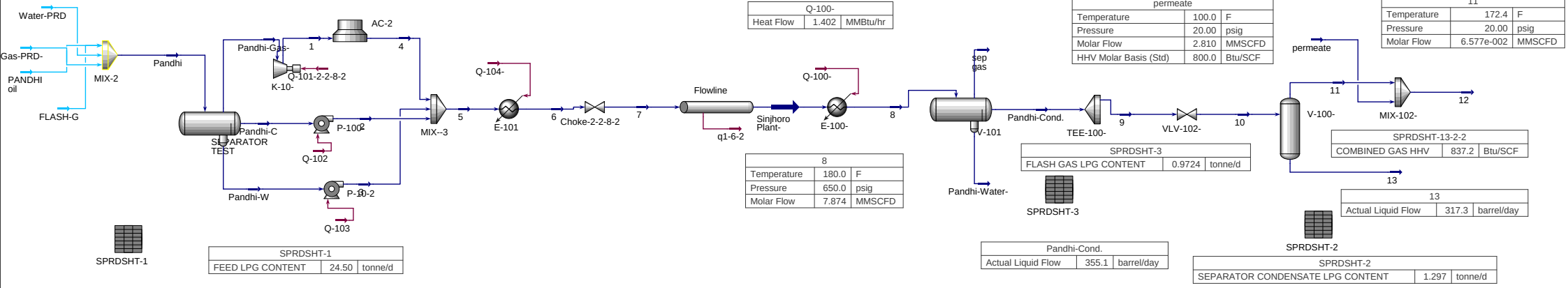

Pandhi		
Temperature	85.00	F
Pressure	450.0	psig
Molar Flow	7.874	MMSCFD
Phase - Molar Flow (Vapour Phase)	5.380	MMSCFD
Phase - Liq Vol Flow (Liquid Phase)	450.0	barrel/day
Phase - Liq Vol Flow (Aqueous Phase)	290.0	barrel/day

sep gas		
Temperature	179.9	F
Pressure	640.0	psig
Molar Flow	5.587	MMSCFD

SPRDSHT-2-5-2		
SEPARATOR GAS LPG CONTENT	23.20	tonne/d

Q-100-		
Heat Flow	1.402	MMBtu/hr

permeate		
Temperature	100.0	F
Pressure	20.00	psig
Molar Flow	2.810	MMSCFD
HHV Molar Basis (Std)	800.0	Btu/SCF

11		
Temperature	172.4	F
Pressure	20.00	psig
Molar Flow	6.577e-002	MMSCFD

8		
Temperature	180.0	F
Pressure	650.0	psig
Molar Flow	7.874	MMSCFD

SPRDSHT-3		
FLASH GAS LPG CONTENT	0.9724	tonne/d

SPRDSHT-13-2-2		
COMBINED GAS HHV	837.2	Btu/SCF

13		
Actual Liquid Flow	317.3	barrel/day

Pandhi-Cond.		
Actual Liquid Flow	355.1	barrel/day

SPRDSHT-1		
FEED LPG CONTENT	24.50	tonne/d

SPRDSHT-2		
SEPARATOR CONDENSATE LPG CONTENT	1.297	tonne/d

Petrochemical Engineering Consultants
Karachi, Pakistan

Case Name:	CASE-3B.hsc
Unit Set:	NewUser5e
Date/Time:	Fri Mar 20 18:25:06 2020

Material Stream: 1

Fluid Package: Basis-1
Property Package: Peng-Robinson

CONDITIONS

	Overall	Vapour Phase	Liquid Phase		
Vapour / Phase Fraction	0.9999	0.9999	0.0001		
Temperature: (F)	329.4	329.4	329.4		
Pressure: (psig)	2095 *	2095	2095		
Molar Flow (MMSCFD)	5.381	5.381	5.240e-004		
Mass Flow (tonne/d)	137.6	137.2	0.3260		
Std Ideal Liq Vol Flow (barrel/day)	2403	2401	1.982		
Molar Enthalpy (kJ/kgmole)	-8.389e+004	-8.380e+004	-9.628e+005		
Molar Entropy (kJ/kgmole-C)	162.4	162.3	1655		
Heat Flow (MMBtu/hr)	-21.31	-21.29	-2.382e-002		
Liq Vol Flow @Std Cond (barrel/day)	9.528e+005 *	9.528e+005	2.085		

PROPERTIES

	Overall	Vapour Phase	Liquid Phase		
Molecular Weight	21.39	21.34	520.4		
Molar Density (kgmole/m3)	4.261	4.261	1.702		
Mass Density (kg/m3)	91.12	90.93	885.8		
Act. Volume Flow (barrel/day)	9496	9493	2.315		
Mass Enthalpy (kJ/kg)	-3923	-3928	-1850		
Mass Entropy (kJ/kg-C)	7.595	7.606	3.180		
Heat Capacity (kJ/kgmole-C)	59.17	59.05	1275		
Mass Heat Capacity (kJ/kg-C)	2.767	2.768	2.450		
LHV Molar Basis (Std) (Btu/SCF)	---	---	---		
LHV Mass Basis (Std) (kJ/kg)	---	---	---		
Phase Fraction [Vol. Basis]	0.9992	0.9992	8.248e-004		
Phase Fraction [Mass Basis]	0.9976	0.9976	2.370e-003		
Partial Pressure of CO2 (psig)	57.20	---	---		
Cost Based on Flow (Cost/s)	0.0000	0.0000	0.0000		
Act. Gas Flow (ACT_m3/h)	62.89	62.89	---		
Avg. Liq. Density (kgmole/m3)	16.84	16.85	1.988		
Specific Heat (kJ/kgmole-C)	59.17	59.05	1275		
Std. Gas Flow (STD_m3/h)	6337	6337	0.6171		
Std. Ideal Liq. Mass Density (kg/m3)	360.1	359.5	1034		
Act. Liq. Flow (barrel/day)	2.315	---	2.315		
Z Factor	---	0.9365	2.344		
Watson K	17.28	17.29	11.39		
User Property	---	---	---		
Partial Pressure of H2S (psig)	-14.69	---	---		
Cp/(Cp - R)	1.163	1.164	1.007		
Cp/Cv	1.348	1.349	1.099		
Heat of Vap. (kJ/kgmole)	1.606e+004	---	---		
Kinematic Viscosity (cSt)	---	0.2123	19.72		
Liq. Mass Density (Std. Cond) (kg/m3)	0.9081	0.9060	983.5		
Liq. Vol. Flow (Std. Cond) (barrel/day)	9.528e+005	9.528e+005	2.085		
Liquid Fraction	9.738e-005	0.0000	1.000		
Molar Volume (m3/kgmole)	0.2347	0.2347	0.5875		
Mass Heat of Vap. (kJ/kg)	751.0	---	---		
Phase Fraction [Molar Basis]	0.9999	0.9999	0.0001		
Surface Tension (dyne/cm)	8.567	---	8.567		
Thermal Conductivity (W/m-K)	---	5.953e-002	8.973e-002		
Viscosity (cP)	---	1.930e-002	17.47		
Cv (Semi-Ideal) (kJ/kgmole-C)	50.86	50.74	1266		
Mass Cv (Semi-Ideal) (kJ/kg-C)	2.378	2.378	2.434		
Cv (kJ/kgmole-C)	43.89	43.77	1160		
Mass Cv (kJ/kg-C)	2.052	2.051	2.230		
Cv (Ent. Method) (kJ/kgmole-C)	43.91	43.79	1194		
Mass Cv (Ent. Method) (kJ/kg-C)	2.053	2.052	2.295		
Cp/Cv (Ent. Method)	1.348	1.349	1.068		

Licensed to: PETROCHEMICAL ENGINEERIN
* Specified by user.

Material Stream: 1 (continued)

Fluid Package: Basis-1
Property Package: Peng-Robinson

PROPERTIES

		Overall	Vapour Phase	Liquid Phase		
Reid VP at 37.8 C	(psig)	---	---	85.65		
True VP at 37.8 C	(psig)	3607	---	1991		
Liq. Vol. Flow - Sum(Std. Cond)	(barrel/day)	9.528e+005	9.528e+005	2.085		
HHV Molar Basis (Std)	(Btu/SCF)	---	---	---		
HHV Mass Basis (Std)	(kJ/kg)	---	---	---		
CO2 Loading		---	---	---		
CO2 App ML Con	(kgmole/m3)	---	---	4.386e-002		
CO2 App WT Con	(kgmol/kg)	---	---	4.951e-005		
Phase Fraction [Act. Vol. Basis]		0.9998	0.9998	2.438e-004		
Mass Exergy	(kJ/kg)	595.2	---	---		
Viscosity Index		---	---	---		
Ideal Gas Cp/Cv		1.195	1.196	1.007		
Ideal Gas Cp	(kJ/kgmole-C)	50.90	50.80	1127		
Mass Ideal Gas Cp	(kJ/kg-C)	2.380	2.381	2.166		
Bubble Point Pressure	(psig)	4369	---	---		

COMPOSITION

Overall Phase

Vapour Fraction 0.9999

COMPONENTS	MOLAR FLOW (kgmole/h)	MOLE FRACTION	MASS FLOW (tonne/d)	MASS FRACTION	LIQUID VOLUME FLOW (m3/h)	LIQUID VOLUME FRACTION
Methane	205.0219	0.7649	78.9395	0.5738	10.9860	0.6901
Ethane	27.6541	0.1032	19.9573	0.1451	2.3379	0.1469
Propane	13.5902	0.0507	14.3829	0.1046	1.1828	0.0743
i-Butane	1.5866	0.0059	2.2133	0.0161	0.1641	0.0103
n-Butane	2.8841	0.0108	4.0233	0.0292	0.2874	0.0181
i-Pentane	0.4635	0.0017	0.8025	0.0058	0.0536	0.0034
n-Pentane	0.4652	0.0017	0.8056	0.0059	0.0533	0.0033
n-Hexane	0.3694	0.0014	0.7639	0.0056	0.0480	0.0030
Nitrogen	5.5752	0.0208	3.7483	0.0272	0.1937	0.0122
CO2	9.1335	0.0341	9.6471	0.0701	0.4870	0.0306
H2S	0.0005	0.0000	0.0004	0.0000	0.0000	0.0000
H2O	0.3945	0.0015	0.1706	0.0012	0.0071	0.0004
NBP[1]95*	0.1425	0.0005	0.2323	0.0017	0.0142	0.0009
NBP[1]121*	0.1318	0.0005	0.2305	0.0017	0.0139	0.0009
NBP[1]147*	0.1254	0.0005	0.2414	0.0018	0.0144	0.0009
NBP[1]171*	0.1733	0.0006	0.3646	0.0027	0.0213	0.0013
NBP[1]195*	0.1579	0.0006	0.3546	0.0026	0.0205	0.0013
NBP[1]222*	0.0732	0.0003	0.1768	0.0013	0.0101	0.0006
NBP[1]248*	0.0375	0.0001	0.0974	0.0007	0.0055	0.0003
NBP[1]273*	0.0181	0.0001	0.0503	0.0004	0.0028	0.0002
NBP[1]299*	0.0083	0.0000	0.0245	0.0002	0.0014	0.0001
NBP[1]325*	0.0033	0.0000	0.0105	0.0001	0.0006	0.0000
NBP[1]351*	0.0015	0.0000	0.0050	0.0000	0.0003	0.0000
NBP[1]377*	0.0007	0.0000	0.0025	0.0000	0.0001	0.0000
NBP[1]402*	0.0003	0.0000	0.0013	0.0000	0.0001	0.0000
NBP[1]428*	0.0002	0.0000	0.0007	0.0000	0.0000	0.0000
NBP[1]454*	0.0001	0.0000	0.0003	0.0000	0.0000	0.0000
NBP[1]480*	0.0000	0.0000	0.0002	0.0000	0.0000	0.0000
NBP[1]505*	0.0000	0.0000	0.0001	0.0000	0.0000	0.0000
NBP[1]531*	0.0000	0.0000	0.0000	0.0000	0.0000	0.0000
NBP[1]557*	0.0000	0.0000	0.0000	0.0000	0.0000	0.0000
NBP[1]582*	0.0000	0.0000	0.0000	0.0000	0.0000	0.0000
NBP[1]608*	0.0000	0.0000	0.0000	0.0000	0.0000	0.0000
NBP[1]634*	0.0000	0.0000	0.0000	0.0000	0.0000	0.0000
NBP[1]659*	0.0000	0.0000	0.0000	0.0000	0.0000	0.0000
NBP[1]685*	0.0000	0.0000	0.0000	0.0000	0.0000	0.0000

* Specified by user.

Material Stream: 1 (continued)

Fluid Package: Basis-1
Property Package: Peng-Robinson

COMPOSITION

Overall Phase (continued)

Vapour Fraction 0.9999

COMPONENTS	MOLAR FLOW (kgmole/h)	MOLE FRACTION	MASS FLOW (tonne/d)	MASS FRACTION	LIQUID VOLUME FLOW (m3/h)	LIQUID VOLUME FRACTION
NBP[1]711*	0.0000	0.0000	0.0000	0.0000	0.0000	0.0000
NBP[1]736*	0.0000	0.0000	0.0000	0.0000	0.0000	0.0000
NBP[1]762*	0.0000	0.0000	0.0000	0.0000	0.0000	0.0000
NBP[1]788*	0.0000	0.0000	0.0000	0.0000	0.0000	0.0000
NBP[1]825*	0.0000	0.0000	0.0000	0.0000	0.0000	0.0000
NBP[1]873*	0.0000	0.0000	0.0000	0.0000	0.0000	0.0000
NBP[1]926*	0.0000	0.0000	0.0000	0.0000	0.0000	0.0000
NBP[1]978*	0.0000	0.0000	0.0000	0.0000	0.0000	0.0000
NBP[1]1021*	0.0000	0.0000	0.0000	0.0000	0.0000	0.0000
NBP[1]1075*	0.0000	0.0000	0.0000	0.0000	0.0000	0.0000
NBP[1]1123*	0.0000	0.0000	0.0000	0.0000	0.0000	0.0000
NBP[1]1173*	0.0000	0.0000	0.0000	0.0000	0.0000	0.0000
NBP[1]1250*	0.0000	0.0000	0.0000	0.0000	0.0000	0.0000
NBP[1]1339*	0.0000	0.0000	0.0000	0.0000	0.0000	0.0000
NBP[1]1432*	0.0000	0.0000	0.0000	0.0000	0.0000	0.0000
NBP[1]1528*	0.0000	0.0000	0.0000	0.0000	0.0000	0.0000
NBP[1]1637*	0.0000	0.0000	0.0000	0.0000	0.0000	0.0000
NBP[1]1732*	0.0000	0.0000	0.0000	0.0000	0.0000	0.0000
NBP[1]1819*	0.0001	0.0000	0.0029	0.0000	0.0001	0.0000
NBP[1]1913*	0.0112	0.0000	0.3148	0.0023	0.0121	0.0008
Total	268.0242	1.0000	137.5655	1.0000	15.9186	1.0000

Vapour Phase

Phase Fraction 0.9999

COMPONENTS	MOLAR FLOW (kgmole/h)	MOLE FRACTION	MASS FLOW (tonne/d)	MASS FRACTION	LIQUID VOLUME FLOW (m3/h)	LIQUID VOLUME FRACTION
Methane	205.0115	0.7650	78.9355	0.5752	10.9855	0.6907
Ethane	27.6523	0.1032	19.9561	0.1454	2.3378	0.1470
Propane	13.5892	0.0507	14.3819	0.1048	1.1827	0.0744
i-Butane	1.5865	0.0059	2.2131	0.0161	0.1641	0.0103
n-Butane	2.8838	0.0108	4.0229	0.0293	0.2874	0.0181
i-Pentane	0.4634	0.0017	0.8025	0.0058	0.0536	0.0034
n-Pentane	0.4652	0.0017	0.8055	0.0059	0.0533	0.0034
n-Hexane	0.3693	0.0014	0.7638	0.0056	0.0480	0.0030
Nitrogen	5.5749	0.0208	3.7481	0.0273	0.1937	0.0122
CO2	9.1329	0.0341	9.6464	0.0703	0.4870	0.0306
H2S	0.0005	0.0000	0.0004	0.0000	0.0000	0.0000
H2O	0.3944	0.0015	0.1705	0.0012	0.0071	0.0004
NBP[1]95*	0.1425	0.0005	0.2323	0.0017	0.0142	0.0009
NBP[1]121*	0.1318	0.0005	0.2305	0.0017	0.0139	0.0009
NBP[1]147*	0.1254	0.0005	0.2413	0.0018	0.0144	0.0009
NBP[1]171*	0.1732	0.0006	0.3645	0.0027	0.0213	0.0013
NBP[1]195*	0.1579	0.0006	0.3545	0.0026	0.0205	0.0013
NBP[1]222*	0.0732	0.0003	0.1768	0.0013	0.0101	0.0006
NBP[1]248*	0.0375	0.0001	0.0974	0.0007	0.0055	0.0003
NBP[1]273*	0.0181	0.0001	0.0503	0.0004	0.0028	0.0002
NBP[1]299*	0.0083	0.0000	0.0245	0.0002	0.0014	0.0001
NBP[1]325*	0.0033	0.0000	0.0105	0.0001	0.0006	0.0000
NBP[1]351*	0.0015	0.0000	0.0050	0.0000	0.0003	0.0000
NBP[1]377*	0.0007	0.0000	0.0025	0.0000	0.0001	0.0000
NBP[1]402*	0.0003	0.0000	0.0013	0.0000	0.0001	0.0000
NBP[1]428*	0.0002	0.0000	0.0007	0.0000	0.0000	0.0000
NBP[1]454*	0.0001	0.0000	0.0003	0.0000	0.0000	0.0000
NBP[1]480*	0.0000	0.0000	0.0002	0.0000	0.0000	0.0000
NBP[1]505*	0.0000	0.0000	0.0001	0.0000	0.0000	0.0000

* Specified by user.

Material Stream: 1 (continued)

Fluid Package: Basis-1
Property Package: Peng-Robinson

COMPOSITION

Vapour Phase (continued)

Phase Fraction 0.9999

COMPONENTS	MOLAR FLOW (kgmole/h)	MOLE FRACTION	MASS FLOW (tonne/d)	MASS FRACTION	LIQUID VOLUME FLOW (m3/h)	LIQUID VOLUME FRACTION
NBP[1]531*	0.0000	0.0000	0.0000	0.0000	0.0000	0.0000
NBP[1]557*	0.0000	0.0000	0.0000	0.0000	0.0000	0.0000
NBP[1]582*	0.0000	0.0000	0.0000	0.0000	0.0000	0.0000
NBP[1]608*	0.0000	0.0000	0.0000	0.0000	0.0000	0.0000
NBP[1]634*	0.0000	0.0000	0.0000	0.0000	0.0000	0.0000
NBP[1]659*	0.0000	0.0000	0.0000	0.0000	0.0000	0.0000
NBP[1]685*	0.0000	0.0000	0.0000	0.0000	0.0000	0.0000
NBP[1]711*	0.0000	0.0000	0.0000	0.0000	0.0000	0.0000
NBP[1]736*	0.0000	0.0000	0.0000	0.0000	0.0000	0.0000
NBP[1]762*	0.0000	0.0000	0.0000	0.0000	0.0000	0.0000
NBP[1]788*	0.0000	0.0000	0.0000	0.0000	0.0000	0.0000
NBP[1]825*	0.0000	0.0000	0.0000	0.0000	0.0000	0.0000
NBP[1]873*	0.0000	0.0000	0.0000	0.0000	0.0000	0.0000
NBP[1]926*	0.0000	0.0000	0.0000	0.0000	0.0000	0.0000
NBP[1]978*	0.0000	0.0000	0.0000	0.0000	0.0000	0.0000
NBP[1]1021*	0.0000	0.0000	0.0000	0.0000	0.0000	0.0000
NBP[1]1075*	0.0000	0.0000	0.0000	0.0000	0.0000	0.0000
NBP[1]1123*	0.0000	0.0000	0.0000	0.0000	0.0000	0.0000
NBP[1]1173*	0.0000	0.0000	0.0000	0.0000	0.0000	0.0000
NBP[1]1250*	0.0000	0.0000	0.0000	0.0000	0.0000	0.0000
NBP[1]1339*	0.0000	0.0000	0.0000	0.0000	0.0000	0.0000
NBP[1]1432*	0.0000	0.0000	0.0000	0.0000	0.0000	0.0000
NBP[1]1528*	0.0000	0.0000	0.0000	0.0000	0.0000	0.0000
NBP[1]1637*	0.0000	0.0000	0.0000	0.0000	0.0000	0.0000
NBP[1]1732*	0.0000	0.0000	0.0000	0.0000	0.0000	0.0000
NBP[1]1819*	0.0000	0.0000	0.0000	0.0000	0.0000	0.0000
NBP[1]1913*	0.0000	0.0000	0.0000	0.0000	0.0000	0.0000
Total	267.9981	1.0000	137.2395	1.0000	15.9054	1.0000

Liquid Phase

Phase Fraction 9.738e-005

COMPONENTS	MOLAR FLOW (kgmole/h)	MOLE FRACTION	MASS FLOW (tonne/d)	MASS FRACTION	LIQUID VOLUME FLOW (m3/h)	LIQUID VOLUME FRACTION
Methane	0.0104	0.3997	0.0040	0.0123	0.0006	0.0426
Ethane	0.0017	0.0659	0.0012	0.0038	0.0001	0.0111
Propane	0.0010	0.0387	0.0011	0.0033	0.0001	0.0067
i-Butane	0.0001	0.0053	0.0002	0.0006	0.0000	0.0011
n-Butane	0.0003	0.0100	0.0004	0.0011	0.0000	0.0020
i-Pentane	0.0000	0.0019	0.0001	0.0003	0.0000	0.0004
n-Pentane	0.0001	0.0020	0.0001	0.0003	0.0000	0.0004
n-Hexane	0.0000	0.0019	0.0001	0.0003	0.0000	0.0005
Nitrogen	0.0003	0.0108	0.0002	0.0006	0.0000	0.0007
CO2	0.0007	0.0258	0.0007	0.0022	0.0000	0.0027
H2S	0.0000	0.0000	0.0000	0.0000	0.0000	0.0000
H2O	0.0000	0.0011	0.0000	0.0000	0.0000	0.0000
NBP[1]95*	0.0000	0.0006	0.0000	0.0001	0.0000	0.0001
NBP[1]121*	0.0000	0.0006	0.0000	0.0001	0.0000	0.0001
NBP[1]147*	0.0000	0.0006	0.0000	0.0001	0.0000	0.0001
NBP[1]171*	0.0000	0.0009	0.0001	0.0002	0.0000	0.0002
NBP[1]195*	0.0000	0.0009	0.0001	0.0002	0.0000	0.0002
NBP[1]222*	0.0000	0.0005	0.0000	0.0001	0.0000	0.0001
NBP[1]248*	0.0000	0.0003	0.0000	0.0001	0.0000	0.0001
NBP[1]273*	0.0000	0.0001	0.0000	0.0000	0.0000	0.0000
NBP[1]299*	0.0000	0.0001	0.0000	0.0000	0.0000	0.0000
NBP[1]325*	0.0000	0.0000	0.0000	0.0000	0.0000	0.0000

* Specified by user.

Material Stream: 1 (continued)

Fluid Package: Basis-1
Property Package: Peng-Robinson

COMPOSITION

Liquid Phase (continued)

Phase Fraction 9.738e-005

COMPONENTS	MOLAR FLOW (kgmole/h)	MOLE FRACTION	MASS FLOW (tonne/d)	MASS FRACTION	LIQUID VOLUME FLOW (m3/h)	LIQUID VOLUME FRACTION
NBP[1]351*	0.0000	0.0000	0.0000	0.0000	0.0000	0.0000
NBP[1]377*	0.0000	0.0000	0.0000	0.0000	0.0000	0.0000
NBP[1]402*	0.0000	0.0000	0.0000	0.0000	0.0000	0.0000
NBP[1]428*	0.0000	0.0000	0.0000	0.0000	0.0000	0.0000
NBP[1]454*	0.0000	0.0000	0.0000	0.0000	0.0000	0.0000
NBP[1]480*	0.0000	0.0000	0.0000	0.0000	0.0000	0.0000
NBP[1]505*	0.0000	0.0000	0.0000	0.0000	0.0000	0.0000
NBP[1]531*	0.0000	0.0000	0.0000	0.0000	0.0000	0.0000
NBP[1]557*	0.0000	0.0000	0.0000	0.0000	0.0000	0.0000
NBP[1]582*	0.0000	0.0000	0.0000	0.0000	0.0000	0.0000
NBP[1]608*	0.0000	0.0000	0.0000	0.0000	0.0000	0.0000
NBP[1]634*	0.0000	0.0000	0.0000	0.0000	0.0000	0.0000
NBP[1]659*	0.0000	0.0000	0.0000	0.0000	0.0000	0.0000
NBP[1]685*	0.0000	0.0000	0.0000	0.0000	0.0000	0.0000
NBP[1]711*	0.0000	0.0000	0.0000	0.0000	0.0000	0.0000
NBP[1]736*	0.0000	0.0000	0.0000	0.0000	0.0000	0.0000
NBP[1]762*	0.0000	0.0000	0.0000	0.0000	0.0000	0.0000
NBP[1]788*	0.0000	0.0000	0.0000	0.0000	0.0000	0.0000
NBP[1]825*	0.0000	0.0000	0.0000	0.0000	0.0000	0.0000
NBP[1]873*	0.0000	0.0000	0.0000	0.0000	0.0000	0.0000
NBP[1]926*	0.0000	0.0000	0.0000	0.0000	0.0000	0.0000
NBP[1]978*	0.0000	0.0000	0.0000	0.0000	0.0000	0.0000
NBP[1]1021*	0.0000	0.0000	0.0000	0.0000	0.0000	0.0000
NBP[1]1075*	0.0000	0.0000	0.0000	0.0000	0.0000	0.0000
NBP[1]1123*	0.0000	0.0000	0.0000	0.0000	0.0000	0.0000
NBP[1]1173*	0.0000	0.0000	0.0000	0.0000	0.0000	0.0000
NBP[1]1250*	0.0000	0.0000	0.0000	0.0000	0.0000	0.0000
NBP[1]1339*	0.0000	0.0000	0.0000	0.0000	0.0000	0.0000
NBP[1]1432*	0.0000	0.0000	0.0000	0.0000	0.0000	0.0000
NBP[1]1528*	0.0000	0.0000	0.0000	0.0000	0.0000	0.0000
NBP[1]1637*	0.0000	0.0000	0.0000	0.0000	0.0000	0.0000
NBP[1]1732*	0.0000	0.0000	0.0000	0.0000	0.0000	0.0000
NBP[1]1819*	0.0001	0.0041	0.0029	0.0088	0.0001	0.0085
NBP[1]1913*	0.0112	0.4282	0.3148	0.9656	0.0121	0.9220
Total	0.0261	1.0000	0.3260	1.0000	0.0131	1.0000

Material Stream: 2

Fluid Package: Basis-1
Property Package: Peng-Robinson

CONDITIONS

		Overall	Liquid Phase	Liquid Phase		
Vapour / Phase Fraction		0.0000	0.0170	0.9830		
Temperature:	(F)	95.88	95.88	95.88		
Pressure:	(psig)	2090 *	2090	2090		
Molar Flow	(MMSCFD)	0.3574	6.079e-003	0.3513		
Mass Flow	(tonne/d)	53.98	3.654	50.33		
Std Ideal Liq Vol Flow	(barrel/day)	449.3	23.56	425.8		
Molar Enthalpy	(kJ/kgmole)	-2.850e+005	-1.060e+006	-2.716e+005		
Molar Entropy	(kJ/kgmole-C)	220.4	1098	205.3		
Heat Flow	(MMBtu/hr)	-4.808	-0.3044	-4.504		
Liq Vol Flow @Std Cond	(barrel/day)	434.3 *	23.73	410.6		

* Specified by user.

Material Stream: 2 (continued)

Fluid Package: Basis-1
Property Package: Peng-Robinson

PROPERTIES

	Overall	Liquid Phase	Liquid Phase		
Molecular Weight	126.4	502.8	119.8		
Molar Density (kgmole/m3)	6.147	1.922	6.390		
Mass Density (kg/m3)	776.7	966.5	765.7		
Act. Volume Flow (barrel/day)	437.2	23.78	413.4		
Mass Enthalpy (kJ/kg)	-2255	-2109	-2266		
Mass Entropy (kJ/kg-C)	1.745	2.183	1.713		
Heat Capacity (kJ/kgmole-C)	255.7	961.1	243.5		
Mass Heat Capacity (kJ/kg-C)	2.024	1.911	2.032		
LHV Molar Basis (Std) (Btu/SCF)	---	---	---		
LHV Mass Basis (Std) (kJ/kg)	---	---	---		
Phase Fraction [Vol. Basis]	0.0000	5.243e-002	0.9476		
Phase Fraction [Mass Basis]	0.0000	6.769e-002	0.9323		
Partial Pressure of CO2 (psig)	-14.70	---	---		
Cost Based on Flow (Cost/s)	0.0000	0.0000	0.0000		
Act. Gas Flow (ACT_m3/h)	---	---	---		
Avg. Liq. Density (kgmole/m3)	5.980	1.940	6.204		
Specific Heat (kJ/kgmole-C)	255.7	961.1	243.5		
Std. Gas Flow (STD_m3/h)	420.9	7.159	413.7		
Std. Ideal Liq. Mass Density (kg/m3)	755.6	975.6	743.5		
Act. Liq. Flow (barrel/day)	437.2	23.78	413.4		
Z Factor	---	2.942	0.8850		
Watson K	11.99	11.67	12.06		
User Property	---	---	---		
Partial Pressure of H2S (psig)	-14.70	---	---		
Cp/(Cp - R)	1.034	1.009	1.035		
Cp/Cv	1.202	1.103	1.210		
Heat of Vap. (kJ/kgmole)	---	---	---		
Kinematic Viscosity (cSt)	1.244	537.4	1.048		
Liq. Mass Density (Std. Cond) (kg/m3)	781.8	968.5	771.0		
Liq. Vol. Flow (Std. Cond) (barrel/day)	434.3	23.73	410.6		
Liquid Fraction	1.000	1.000	1.000		
Molar Volume (m3/kgmole)	0.1627	0.5203	0.1565		
Mass Heat of Vap. (kJ/kg)	---	---	---		
Phase Fraction [Molar Basis]	0.0000	0.0170	0.9830		
Surface Tension (dyne/cm)	---	20.30	15.38		
Thermal Conductivity (W/m-K)	9.974e-002	0.1174	9.881e-002		
Viscosity (cP)	1.244	519.4	0.8029		
Cv (Semi-Ideal) (kJ/kgmole-C)	247.4	952.7	---		
Mass Cv (Semi-Ideal) (kJ/kg-C)	1.958	1.895	---		
Cv (kJ/kgmole-C)	212.7	871.2	---		
Mass Cv (kJ/kg-C)	1.683	1.733	---		
Cv (Ent. Method) (kJ/kgmole-C)	---	---	---		
Mass Cv (Ent. Method) (kJ/kg-C)	---	---	---		
Cp/Cv (Ent. Method)	---	---	---		
Reid VP at 37.8 C (psig)	97.87	26.74	100.9		
True VP at 37.8 C (psig)	475.9	449.8	497.6		
Liq. Vol. Flow - Sum(Std. Cond) (barrel/day)	23.73	23.73	0.0000		
HHV Molar Basis (Std) (Btu/SCF)	---	---	---		
HHV Mass Basis (Std) (kJ/kg)	---	---	---		
CO2 Loading	---	---	---		
CO2 App ML Con (kgmole/m3)	8.263e-002	2.756e-002	8.580e-002		
CO2 App WT Con (kgmol/kg)	1.064e-004	2.851e-005	1.120e-004		
Phase Fraction [Act. Vol. Basis]	0.0000	5.440e-002	0.9456		
Mass Exergy (kJ/kg)	35.50	---	---		
Viscosity Index	32.55	---	---		
Ideal Gas Cp/Cv	1.043	1.010	1.045		
Ideal Gas Cp (kJ/kgmole-C)	203.6	802.7	193.3		

* Specified by user.

Material Stream: 2 (continued)

Fluid Package: Basis-1
Property Package: Peng-Robinson

PROPERTIES

	Overall	Liquid Phase	Liquid Phase		
Mass Ideal Gas Cp (kJ/kg-C)	1.612	1.596	1.613		
Bubble Point Pressure (psig)	467.5	---	---		

COMPOSITION

Overall Phase

Vapour Fraction 0.0000

COMPONENTS	MOLAR FLOW (kgmole/h)	MOLE FRACTION	MASS FLOW (tonne/d)	MASS FRACTION	LIQUID VOLUME FLOW (m3/h)	LIQUID VOLUME FRACTION
Methane	2.0221	0.1136	0.7786	0.0144	0.1084	0.0364
Ethane	1.1465	0.0644	0.8274	0.0153	0.0969	0.0326
Propane	1.6775	0.0942	1.7753	0.0329	0.1460	0.0490
i-Butane	0.4420	0.0248	0.6166	0.0114	0.0457	0.0154
n-Butane	1.0672	0.0600	1.4887	0.0276	0.1064	0.0357
i-Pentane	0.3860	0.0217	0.6684	0.0124	0.0447	0.0150
n-Pentane	0.4950	0.0278	0.8571	0.0159	0.0567	0.0191
n-Hexane	1.1004	0.0618	2.2760	0.0422	0.1431	0.0481
Nitrogen	0.0228	0.0013	0.0153	0.0003	0.0008	0.0003
CO2	0.2393	0.0134	0.2527	0.0047	0.0128	0.0043
H2S	0.0000	0.0000	0.0000	0.0000	0.0000	0.0000
H2O	0.0107	0.0006	0.0046	0.0001	0.0002	0.0001
NBP[1]95*	0.1457	0.0082	0.2376	0.0044	0.0146	0.0049
NBP[1]121*	0.2063	0.0116	0.3606	0.0067	0.0218	0.0073
NBP[1]147*	0.3061	0.0172	0.5891	0.0109	0.0350	0.0118
NBP[1]171*	0.6492	0.0365	1.3660	0.0253	0.0800	0.0269
NBP[1]195*	0.9179	0.0516	2.0614	0.0382	0.1193	0.0401
NBP[1]222*	0.7271	0.0408	1.7563	0.0325	0.1004	0.0337
NBP[1]248*	0.6282	0.0353	1.6313	0.0302	0.0921	0.0309
NBP[1]273*	0.5177	0.0291	1.4378	0.0266	0.0803	0.0270
NBP[1]299*	0.4103	0.0230	1.2148	0.0225	0.0671	0.0225
NBP[1]325*	0.2995	0.0168	0.9422	0.0175	0.0515	0.0173
NBP[1]351*	0.2442	0.0137	0.8165	0.0151	0.0442	0.0148
NBP[1]377*	0.2240	0.0126	0.7989	0.0148	0.0428	0.0144
NBP[1]402*	0.2058	0.0116	0.7826	0.0145	0.0415	0.0139
NBP[1]428*	0.1959	0.0110	0.7949	0.0147	0.0417	0.0140
NBP[1]454*	0.1955	0.0110	0.8477	0.0157	0.0441	0.0148
NBP[1]480*	0.1981	0.0111	0.9180	0.0170	0.0473	0.0159
NBP[1]505*	0.1920	0.0108	0.9483	0.0176	0.0484	0.0162
NBP[1]531*	0.1852	0.0104	0.9740	0.0180	0.0492	0.0165
NBP[1]557*	0.1784	0.0100	0.9978	0.0185	0.0500	0.0168
NBP[1]582*	0.1706	0.0096	1.0132	0.0188	0.0503	0.0169
NBP[1]608*	0.1643	0.0092	1.0351	0.0192	0.0510	0.0171
NBP[1]634*	0.1611	0.0090	1.0753	0.0199	0.0526	0.0177
NBP[1]659*	0.1586	0.0089	1.1194	0.0207	0.0543	0.0182
NBP[1]685*	0.1641	0.0092	1.2227	0.0227	0.0588	0.0198
NBP[1]711*	0.1715	0.0096	1.3445	0.0249	0.0642	0.0216
NBP[1]736*	0.1697	0.0095	1.3915	0.0258	0.0659	0.0221
NBP[1]762*	0.1653	0.0093	1.4214	0.0263	0.0669	0.0225
NBP[1]788*	0.1585	0.0089	1.4424	0.0267	0.0674	0.0226
NBP[1]825*	0.2655	0.0149	2.5963	0.0481	0.1201	0.0404
NBP[1]873*	0.1830	0.0103	1.9404	0.0359	0.0887	0.0298
NBP[1]926*	0.1437	0.0081	1.6472	0.0305	0.0744	0.0250
NBP[1]978*	0.1474	0.0083	1.8524	0.0343	0.0825	0.0277
NBP[1]1021*	0.0728	0.0041	0.9655	0.0179	0.0426	0.0143
NBP[1]1075*	0.0449	0.0025	0.6310	0.0117	0.0276	0.0093
NBP[1]1123*	0.0417	0.0023	0.6267	0.0116	0.0271	0.0091
NBP[1]1173*	0.0300	0.0017	0.4772	0.0088	0.0205	0.0069
NBP[1]1250*	0.0393	0.0022	0.6767	0.0125	0.0287	0.0096

* Specified by user.

Material Stream: 2 (continued)

Fluid Package: Basis-1
Property Package: Peng-Robinson

COMPOSITION

Overall Phase (continued)

Vapour Fraction 0.0000

COMPONENTS	MOLAR FLOW (kgmole/h)	MOLE FRACTION	MASS FLOW (tonne/d)	MASS FRACTION	LIQUID VOLUME FLOW (m3/h)	LIQUID VOLUME FRACTION
NBP[1]1339*	0.0364	0.0020	0.6999	0.0130	0.0291	0.0098
NBP[1]1432*	0.0257	0.0014	0.5397	0.0100	0.0221	0.0074
NBP[1]1528*	0.0180	0.0010	0.4082	0.0076	0.0165	0.0055
NBP[1]1637*	0.0127	0.0007	0.3047	0.0056	0.0122	0.0041
NBP[1]1732*	0.0101	0.0006	0.2565	0.0048	0.0101	0.0034
NBP[1]1819*	0.0096	0.0005	0.2561	0.0047	0.0100	0.0034
NBP[1]1913*	0.0000	0.0000	0.0000	0.0000	0.0000	0.0000
Total	17.8012	1.0000	53.9808	1.0000	2.9766	1.0000

Liquid Phase

Phase Fraction 1.701e-002

COMPONENTS	MOLAR FLOW (kgmole/h)	MOLE FRACTION	MASS FLOW (tonne/d)	MASS FRACTION	LIQUID VOLUME FLOW (m3/h)	LIQUID VOLUME FRACTION
Methane	0.0348	0.1150	0.0134	0.0037	0.0019	0.0120
Ethane	0.0134	0.0442	0.0097	0.0026	0.0011	0.0073
Propane	0.0157	0.0517	0.0166	0.0045	0.0014	0.0087
i-Butane	0.0037	0.0124	0.0052	0.0014	0.0004	0.0025
n-Butane	0.0082	0.0271	0.0114	0.0031	0.0008	0.0052
i-Pentane	0.0027	0.0090	0.0047	0.0013	0.0003	0.0020
n-Pentane	0.0033	0.0108	0.0057	0.0015	0.0004	0.0024
n-Hexane	0.0064	0.0212	0.0133	0.0036	0.0008	0.0054
Nitrogen	0.0006	0.0021	0.0004	0.0001	0.0000	0.0001
CO2	0.0043	0.0143	0.0046	0.0013	0.0002	0.0015
H2S	0.0000	0.0000	0.0000	0.0000	0.0000	0.0000
H2O	0.0002	0.0006	0.0001	0.0000	0.0000	0.0000
NBP[1]95*	0.0009	0.0031	0.0015	0.0004	0.0001	0.0006
NBP[1]121*	0.0012	0.0041	0.0022	0.0006	0.0001	0.0008
NBP[1]147*	0.0017	0.0057	0.0033	0.0009	0.0002	0.0013
NBP[1]171*	0.0034	0.0113	0.0072	0.0020	0.0004	0.0027
NBP[1]195*	0.0046	0.0151	0.0103	0.0028	0.0006	0.0038
NBP[1]222*	0.0034	0.0114	0.0083	0.0023	0.0005	0.0030
NBP[1]248*	0.0028	0.0094	0.0074	0.0020	0.0004	0.0027
NBP[1]273*	0.0022	0.0074	0.0062	0.0017	0.0003	0.0022
NBP[1]299*	0.0017	0.0056	0.0050	0.0014	0.0003	0.0018
NBP[1]325*	0.0012	0.0040	0.0038	0.0010	0.0002	0.0013
NBP[1]351*	0.0009	0.0031	0.0032	0.0009	0.0002	0.0011
NBP[1]377*	0.0008	0.0028	0.0030	0.0008	0.0002	0.0010
NBP[1]402*	0.0007	0.0025	0.0028	0.0008	0.0002	0.0010
NBP[1]428*	0.0007	0.0023	0.0028	0.0008	0.0001	0.0009
NBP[1]454*	0.0007	0.0022	0.0029	0.0008	0.0002	0.0010
NBP[1]480*	0.0007	0.0022	0.0031	0.0008	0.0002	0.0010
NBP[1]505*	0.0006	0.0021	0.0031	0.0009	0.0002	0.0010
NBP[1]531*	0.0006	0.0020	0.0032	0.0009	0.0002	0.0010
NBP[1]557*	0.0006	0.0019	0.0032	0.0009	0.0002	0.0010
NBP[1]582*	0.0006	0.0018	0.0033	0.0009	0.0002	0.0010
NBP[1]608*	0.0005	0.0018	0.0034	0.0009	0.0002	0.0011
NBP[1]634*	0.0005	0.0018	0.0036	0.0010	0.0002	0.0011
NBP[1]659*	0.0005	0.0018	0.0038	0.0010	0.0002	0.0012
NBP[1]685*	0.0006	0.0019	0.0043	0.0012	0.0002	0.0013
NBP[1]711*	0.0006	0.0020	0.0049	0.0013	0.0002	0.0015
NBP[1]736*	0.0006	0.0021	0.0053	0.0015	0.0003	0.0016
NBP[1]762*	0.0007	0.0022	0.0058	0.0016	0.0003	0.0018
NBP[1]788*	0.0007	0.0023	0.0065	0.0018	0.0003	0.0019
NBP[1]825*	0.0014	0.0046	0.0137	0.0037	0.0006	0.0041
NBP[1]873*	0.0013	0.0043	0.0137	0.0037	0.0006	0.0040

* Specified by user.

Material Stream: 2 (continued)

Fluid Package: Basis-1
Property Package: Peng-Robinson

COMPOSITION

Liquid Phase (continued)

Phase Fraction 1.701e-002

COMPONENTS	MOLAR FLOW (kgmole/h)	MOLE FRACTION	MASS FLOW (tonne/d)	MASS FRACTION	LIQUID VOLUME FLOW (m3/h)	LIQUID VOLUME FRACTION
NBP[1]926*	0.0015	0.0051	0.0177	0.0048	0.0008	0.0051
NBP[1]978*	0.0024	0.0080	0.0303	0.0083	0.0014	0.0087
NBP[1]1021*	0.0021	0.0068	0.0273	0.0075	0.0012	0.0077
NBP[1]1075*	0.0030	0.0098	0.0418	0.0114	0.0018	0.0117
NBP[1]1123*	0.0060	0.0198	0.0902	0.0247	0.0039	0.0250
NBP[1]1173*	0.0108	0.0355	0.1711	0.0468	0.0073	0.0470
NBP[1]1250*	0.0337	0.1112	0.5795	0.1586	0.0246	0.1574
NBP[1]1339*	0.0361	0.1194	0.6954	0.1903	0.0290	0.1855
NBP[1]1432*	0.0257	0.0848	0.5397	0.1477	0.0221	0.1418
NBP[1]1528*	0.0180	0.0595	0.4082	0.1117	0.0165	0.1059
NBP[1]1637*	0.0127	0.0418	0.3047	0.0834	0.0122	0.0780
NBP[1]1732*	0.0101	0.0334	0.2565	0.0702	0.0101	0.0650
NBP[1]1819*	0.0096	0.0318	0.2561	0.0701	0.0100	0.0641
NBP[1]1913*	0.0000	0.0000	0.0000	0.0000	0.0000	0.0000
Total	0.3028	1.0000	3.6542	1.0000	0.1561	1.0000

Liquid Phase

Phase Fraction 0.9830

COMPONENTS	MOLAR FLOW (kgmole/h)	MOLE FRACTION	MASS FLOW (tonne/d)	MASS FRACTION	LIQUID VOLUME FLOW (m3/h)	LIQUID VOLUME FRACTION
Methane	1.9873	0.1136	0.7652	0.0152	0.1065	0.0378
Ethane	1.1332	0.0648	0.8178	0.0162	0.0958	0.0340
Propane	1.6618	0.0950	1.7588	0.0349	0.1446	0.0513
i-Butane	0.4383	0.0250	0.6114	0.0121	0.0453	0.0161
n-Butane	1.0590	0.0605	1.4773	0.0294	0.1055	0.0374
i-Pentane	0.3833	0.0219	0.6637	0.0132	0.0444	0.0157
n-Pentane	0.4917	0.0281	0.8515	0.0169	0.0563	0.0200
n-Hexane	1.0940	0.0625	2.2627	0.0450	0.1423	0.0504
Nitrogen	0.0222	0.0013	0.0149	0.0003	0.0008	0.0003
CO2	0.2349	0.0134	0.2482	0.0049	0.0125	0.0044
H2S	0.0000	0.0000	0.0000	0.0000	0.0000	0.0000
H2O	0.0105	0.0006	0.0045	0.0001	0.0002	0.0001
NBP[1]95*	0.1448	0.0083	0.2360	0.0047	0.0145	0.0051
NBP[1]121*	0.2050	0.0117	0.3585	0.0071	0.0217	0.0077
NBP[1]147*	0.3043	0.0174	0.5858	0.0116	0.0348	0.0123
NBP[1]171*	0.6458	0.0369	1.3588	0.0270	0.0795	0.0282
NBP[1]195*	0.9133	0.0522	2.0511	0.0408	0.1187	0.0421
NBP[1]222*	0.7237	0.0414	1.7480	0.0347	0.0999	0.0354
NBP[1]248*	0.6253	0.0357	1.6240	0.0323	0.0917	0.0325
NBP[1]273*	0.5155	0.0295	1.4316	0.0284	0.0799	0.0283
NBP[1]299*	0.4085	0.0233	1.2098	0.0240	0.0668	0.0237
NBP[1]325*	0.2983	0.0170	0.9385	0.0186	0.0513	0.0182
NBP[1]351*	0.2432	0.0139	0.8133	0.0162	0.0440	0.0156
NBP[1]377*	0.2232	0.0128	0.7959	0.0158	0.0426	0.0151
NBP[1]402*	0.2050	0.0117	0.7797	0.0155	0.0414	0.0147
NBP[1]428*	0.1952	0.0112	0.7921	0.0157	0.0416	0.0147
NBP[1]454*	0.1948	0.0111	0.8447	0.0168	0.0439	0.0156
NBP[1]480*	0.1975	0.0113	0.9149	0.0182	0.0471	0.0167
NBP[1]505*	0.1913	0.0109	0.9451	0.0188	0.0482	0.0171
NBP[1]531*	0.1846	0.0106	0.9708	0.0193	0.0491	0.0174
NBP[1]557*	0.1778	0.0102	0.9946	0.0198	0.0498	0.0177
NBP[1]582*	0.1700	0.0097	1.0099	0.0201	0.0502	0.0178
NBP[1]608*	0.1637	0.0094	1.0317	0.0205	0.0508	0.0180
NBP[1]634*	0.1606	0.0092	1.0718	0.0213	0.0524	0.0186
NBP[1]659*	0.1581	0.0090	1.1156	0.0222	0.0541	0.0192

* Specified by user.

Material Stream: 2 (continued)

Fluid Package: Basis-1
Property Package: Peng-Robinson

COMPOSITION

Liquid Phase (continued)

Phase Fraction 0.9830

COMPONENTS	MOLAR FLOW (kgmole/h)	MOLE FRACTION	MASS FLOW (tonne/d)	MASS FRACTION	LIQUID VOLUME FLOW (m3/h)	LIQUID VOLUME FRACTION
NBP[1]685*	0.1635	0.0093	1.2185	0.0242	0.0586	0.0208
NBP[1]711*	0.1709	0.0098	1.3396	0.0266	0.0639	0.0227
NBP[1]736*	0.1691	0.0097	1.3862	0.0275	0.0657	0.0233
NBP[1]762*	0.1646	0.0094	1.4156	0.0281	0.0666	0.0236
NBP[1]788*	0.1578	0.0090	1.4359	0.0285	0.0671	0.0238
NBP[1]825*	0.2641	0.0151	2.5826	0.0513	0.1195	0.0424
NBP[1]873*	0.1817	0.0104	1.9267	0.0383	0.0881	0.0312
NBP[1]926*	0.1422	0.0081	1.6295	0.0324	0.0736	0.0261
NBP[1]978*	0.1449	0.0083	1.8221	0.0362	0.0811	0.0288
NBP[1]1021*	0.0708	0.0040	0.9382	0.0186	0.0414	0.0147
NBP[1]1075*	0.0419	0.0024	0.5892	0.0117	0.0258	0.0091
NBP[1]1123*	0.0357	0.0020	0.5365	0.0107	0.0232	0.0082
NBP[1]1173*	0.0192	0.0011	0.3061	0.0061	0.0131	0.0047
NBP[1]1250*	0.0056	0.0003	0.0972	0.0019	0.0041	0.0015
NBP[1]1339*	0.0002	0.0000	0.0045	0.0001	0.0002	0.0001
NBP[1]1432*	0.0000	0.0000	0.0000	0.0000	0.0000	0.0000
NBP[1]1528*	0.0000	0.0000	0.0000	0.0000	0.0000	0.0000
NBP[1]1637*	0.0000	0.0000	0.0000	0.0000	0.0000	0.0000
NBP[1]1732*	0.0000	0.0000	0.0000	0.0000	0.0000	0.0000
NBP[1]1819*	0.0000	0.0000	0.0000	0.0000	0.0000	0.0000
NBP[1]1913*	0.0000	0.0000	0.0000	0.0000	0.0000	0.0000
Total	17.4984	1.0000	50.3266	1.0000	2.8205	1.0000

Material Stream: 3

Fluid Package: Basis-1
Property Package: Peng-Robinson

CONDITIONS

		Overall	Aqueous Phase
Vapour / Phase Fraction		0.0000	1.0000
Temperature:	(F)	86.60	86.60
Pressure:	(psig)	2090 *	2090
Molar Flow	(MMSCFD)	2.135	2.135
Mass Flow	(tonne/d)	46.00	46.00
Std Ideal Liq Vol Flow	(barrel/day)	290.0	290.0
Molar Enthalpy	(kJ/kgmole)	-2.856e+005	-2.856e+005
Molar Entropy	(kJ/kgmole-C)	54.92	54.92
Heat Flow	(MMBtu/hr)	-28.79	-28.79
Liq Vol Flow @Std Cond	(barrel/day)	285.1 *	285.1

PROPERTIES

		Overall	Aqueous Phase
Molecular Weight		18.03	18.03
Molar Density	(kgmole/m3)	55.91	55.91
Mass Density	(kg/m3)	1008	1008
Act. Volume Flow	(barrel/day)	287.1	287.1
Mass Enthalpy	(kJ/kg)	-1.584e+004	-1.584e+004
Mass Entropy	(kJ/kg-C)	3.047	3.047
Heat Capacity	(kJ/kgmole-C)	77.42	77.42
Mass Heat Capacity	(kJ/kg-C)	4.295	4.295
LHV Molar Basis (Std)	(Btu/SCF)	1.809e-004	1.809e-004
LHV Mass Basis (Std)	(kJ/kg)	8.858e-003	8.858e-003
Phase Fraction [Vol. Basis]		0.0000	1.000
Phase Fraction [Mass Basis]		0.0000	1.000
Partial Pressure of CO2	(psig)	-14.70	---

* Specified by user.

Material Stream: 3 (continued)

Fluid Package: Basis-1
Property Package: Peng-Robinson

PROPERTIES

	Overall	Aqueous Phase			
Cost Based on Flow (Cost/s)	0.0000	0.0000			
Act. Gas Flow (ACT_m3/h)	---	---			
Avg. Liq. Density (kgmole/m3)	55.35	55.35			
Specific Heat (kJ/kgmole-C)	77.42	77.42			
Std. Gas Flow (STD_m3/h)	2514	2514			
Std. Ideal Liq. Mass Density (kg/m3)	997.8	997.8			
Act. Liq. Flow (barrel/day)	287.1	287.1			
Z Factor	0.1029	0.1029			
Watson K	8.497	8.497			
User Property	---	---			
Partial Pressure of H2S (psig)	-14.70	---			
Cp/(Cp - R)	1.120	1.120			
Cp/Cv	1.148	1.148			
Heat of Vap. (kJ/kgmole)	1.881e+004	---			
Kinematic Viscosity (cSt)	0.7854	0.7854			
Liq. Mass Density (Std. Cond) (kg/m3)	1015	1015			
Liq. Vol. Flow (Std. Cond) (barrel/day)	285.1	285.1			
Liquid Fraction	1.000	1.000			
Molar Volume (m3/kgmole)	1.789e-002	1.789e-002			
Mass Heat of Vap. (kJ/kg)	1044	---			
Phase Fraction [Molar Basis]	0.0000	1.0000			
Surface Tension (dyne/cm)	71.15	71.15			
Thermal Conductivity (W/m-K)	0.6187	0.6187			
Viscosity (cP)	0.7916	0.7916			
Cv (Semi-Ideal) (kJ/kgmole-C)	69.10	69.10			
Mass Cv (Semi-Ideal) (kJ/kg-C)	3.834	3.834			
Cv (kJ/kgmole-C)	67.44	67.44			
Mass Cv (kJ/kg-C)	3.741	3.741			
Cv (Ent. Method) (kJ/kgmole-C)	66.91	66.91			
Mass Cv (Ent. Method) (kJ/kg-C)	3.712	3.712			
Cp/Cv (Ent. Method)	1.157	1.157			
Reid VP at 37.8 C (psig)	---	---			
True VP at 37.8 C (psig)	17.11	17.11			
Liq. Vol. Flow - Sum(Std. Cond) (barrel/day)	285.1	285.1			
HHV Molar Basis (Std) (Btu/SCF)	46.45	46.45			
HHV Mass Basis (Std) (kJ/kg)	2274	2274			
CO2 Loading	---	---			
CO2 App ML Con (kgmole/m3)	2.222e-002	2.222e-002			
CO2 App WT Con (kgmol/kg)	2.204e-005	2.204e-005			
Phase Fraction [Act. Vol. Basis]	0.0000	1.000			
Mass Exergy (kJ/kg)	17.16	---			
Viscosity Index	-0.2852	---			
Ideal Gas Cp/Cv	1.329	1.329			
Ideal Gas Cp (kJ/kgmole-C)	33.61	33.61			
Mass Ideal Gas Cp (kJ/kg-C)	1.864	1.864			
Bubble Point Pressure (psig)	13.01	---			

COMPOSITION

Overall Phase

Vapour Fraction 0.0000

COMPONENTS	MOLAR FLOW (kgmole/h)	MOLE FRACTION	MASS FLOW (tonne/d)	MASS FRACTION	LIQUID VOLUME FLOW (m3/h)	LIQUID VOLUME FRACTION
Methane	0.0000	0.0000	0.0000	0.0000	0.0000	0.0000
Ethane	0.0000	0.0000	0.0000	0.0000	0.0000	0.0000
Propane	0.0000	0.0000	0.0000	0.0000	0.0000	0.0000
i-Butane	0.0000	0.0000	0.0000	0.0000	0.0000	0.0000
n-Butane	0.0000	0.0000	0.0000	0.0000	0.0000	0.0000

* Specified by user.

Material Stream: 3 (continued)

Fluid Package: Basis-1
Property Package: Peng-Robinson

COMPOSITION

Overall Phase (continued)

Vapour Fraction 0.0000

COMPONENTS	MOLAR FLOW (kgmole/h)	MOLE FRACTION	MASS FLOW (tonne/d)	MASS FRACTION	LIQUID VOLUME FLOW (m3/h)	LIQUID VOLUME FRACTION
i-Pentane	0.0000	0.0000	0.0000	0.0000	0.0000	0.0000
n-Pentane	0.0000	0.0000	0.0000	0.0000	0.0000	0.0000
n-Hexane	0.0000	0.0000	0.0000	0.0000	0.0000	0.0000
Nitrogen	0.0008	0.0000	0.0006	0.0000	0.0000	0.0000
CO2	0.0423	0.0004	0.0446	0.0010	0.0023	0.0012
H2S	0.0000	0.0000	0.0000	0.0000	0.0000	0.0000
H2O	106.2938	0.9996	45.9575	0.9990	1.9188	0.9988
NBP[1]95*	0.0000	0.0000	0.0000	0.0000	0.0000	0.0000
NBP[1]121*	0.0000	0.0000	0.0000	0.0000	0.0000	0.0000
NBP[1]147*	0.0000	0.0000	0.0000	0.0000	0.0000	0.0000
NBP[1]171*	0.0000	0.0000	0.0000	0.0000	0.0000	0.0000
NBP[1]195*	0.0000	0.0000	0.0000	0.0000	0.0000	0.0000
NBP[1]222*	0.0000	0.0000	0.0000	0.0000	0.0000	0.0000
NBP[1]248*	0.0000	0.0000	0.0000	0.0000	0.0000	0.0000
NBP[1]273*	0.0000	0.0000	0.0000	0.0000	0.0000	0.0000
NBP[1]299*	0.0000	0.0000	0.0000	0.0000	0.0000	0.0000
NBP[1]325*	0.0000	0.0000	0.0000	0.0000	0.0000	0.0000
NBP[1]351*	0.0000	0.0000	0.0000	0.0000	0.0000	0.0000
NBP[1]377*	0.0000	0.0000	0.0000	0.0000	0.0000	0.0000
NBP[1]402*	0.0000	0.0000	0.0000	0.0000	0.0000	0.0000
NBP[1]428*	0.0000	0.0000	0.0000	0.0000	0.0000	0.0000
NBP[1]454*	0.0000	0.0000	0.0000	0.0000	0.0000	0.0000
NBP[1]480*	0.0000	0.0000	0.0000	0.0000	0.0000	0.0000
NBP[1]505*	0.0000	0.0000	0.0000	0.0000	0.0000	0.0000
NBP[1]531*	0.0000	0.0000	0.0000	0.0000	0.0000	0.0000
NBP[1]557*	0.0000	0.0000	0.0000	0.0000	0.0000	0.0000
NBP[1]582*	0.0000	0.0000	0.0000	0.0000	0.0000	0.0000
NBP[1]608*	0.0000	0.0000	0.0000	0.0000	0.0000	0.0000
NBP[1]634*	0.0000	0.0000	0.0000	0.0000	0.0000	0.0000
NBP[1]659*	0.0000	0.0000	0.0000	0.0000	0.0000	0.0000
NBP[1]685*	0.0000	0.0000	0.0000	0.0000	0.0000	0.0000
NBP[1]711*	0.0000	0.0000	0.0000	0.0000	0.0000	0.0000
NBP[1]736*	0.0000	0.0000	0.0000	0.0000	0.0000	0.0000
NBP[1]762*	0.0000	0.0000	0.0000	0.0000	0.0000	0.0000
NBP[1]788*	0.0000	0.0000	0.0000	0.0000	0.0000	0.0000
NBP[1]825*	0.0000	0.0000	0.0000	0.0000	0.0000	0.0000
NBP[1]873*	0.0000	0.0000	0.0000	0.0000	0.0000	0.0000
NBP[1]926*	0.0000	0.0000	0.0000	0.0000	0.0000	0.0000
NBP[1]978*	0.0000	0.0000	0.0000	0.0000	0.0000	0.0000
NBP[1]1021*	0.0000	0.0000	0.0000	0.0000	0.0000	0.0000
NBP[1]1075*	0.0000	0.0000	0.0000	0.0000	0.0000	0.0000
NBP[1]1123*	0.0000	0.0000	0.0000	0.0000	0.0000	0.0000
NBP[1]1173*	0.0000	0.0000	0.0000	0.0000	0.0000	0.0000
NBP[1]1250*	0.0000	0.0000	0.0000	0.0000	0.0000	0.0000
NBP[1]1339*	0.0000	0.0000	0.0000	0.0000	0.0000	0.0000
NBP[1]1432*	0.0000	0.0000	0.0000	0.0000	0.0000	0.0000
NBP[1]1528*	0.0000	0.0000	0.0000	0.0000	0.0000	0.0000
NBP[1]1637*	0.0000	0.0000	0.0000	0.0000	0.0000	0.0000
NBP[1]1732*	0.0000	0.0000	0.0000	0.0000	0.0000	0.0000
NBP[1]1819*	0.0000	0.0000	0.0000	0.0000	0.0000	0.0000
NBP[1]1913*	0.0000	0.0000	0.0000	0.0000	0.0000	0.0000
Total	106.3369	1.0000	46.0026	1.0000	1.9210	1.0000

* Specified by user.

Material Stream: 3 (continued)

Fluid Package: Basis-1
Property Package: Peng-Robinson

COMPOSITION

Aqueous Phase

Phase Fraction 1.000

COMPONENTS	MOLAR FLOW (kgmole/h)	MOLE FRACTION	MASS FLOW (tonne/d)	MASS FRACTION	LIQUID VOLUME FLOW (m3/h)	LIQUID VOLUME FRACTION
Methane	0.0000	0.0000	0.0000	0.0000	0.0000	0.0000
Ethane	0.0000	0.0000	0.0000	0.0000	0.0000	0.0000
Propane	0.0000	0.0000	0.0000	0.0000	0.0000	0.0000
i-Butane	0.0000	0.0000	0.0000	0.0000	0.0000	0.0000
n-Butane	0.0000	0.0000	0.0000	0.0000	0.0000	0.0000
i-Pentane	0.0000	0.0000	0.0000	0.0000	0.0000	0.0000
n-Pentane	0.0000	0.0000	0.0000	0.0000	0.0000	0.0000
n-Hexane	0.0000	0.0000	0.0000	0.0000	0.0000	0.0000
Nitrogen	0.0008	0.0000	0.0006	0.0000	0.0000	0.0000
CO2	0.0423	0.0004	0.0446	0.0010	0.0023	0.0012
H2S	0.0000	0.0000	0.0000	0.0000	0.0000	0.0000
H2O	106.2938	0.9996	45.9575	0.9990	1.9188	0.9988
NBP[1]95*	0.0000	0.0000	0.0000	0.0000	0.0000	0.0000
NBP[1]121*	0.0000	0.0000	0.0000	0.0000	0.0000	0.0000
NBP[1]147*	0.0000	0.0000	0.0000	0.0000	0.0000	0.0000
NBP[1]171*	0.0000	0.0000	0.0000	0.0000	0.0000	0.0000
NBP[1]195*	0.0000	0.0000	0.0000	0.0000	0.0000	0.0000
NBP[1]222*	0.0000	0.0000	0.0000	0.0000	0.0000	0.0000
NBP[1]248*	0.0000	0.0000	0.0000	0.0000	0.0000	0.0000
NBP[1]273*	0.0000	0.0000	0.0000	0.0000	0.0000	0.0000
NBP[1]299*	0.0000	0.0000	0.0000	0.0000	0.0000	0.0000
NBP[1]325*	0.0000	0.0000	0.0000	0.0000	0.0000	0.0000
NBP[1]351*	0.0000	0.0000	0.0000	0.0000	0.0000	0.0000
NBP[1]377*	0.0000	0.0000	0.0000	0.0000	0.0000	0.0000
NBP[1]402*	0.0000	0.0000	0.0000	0.0000	0.0000	0.0000
NBP[1]428*	0.0000	0.0000	0.0000	0.0000	0.0000	0.0000
NBP[1]454*	0.0000	0.0000	0.0000	0.0000	0.0000	0.0000
NBP[1]480*	0.0000	0.0000	0.0000	0.0000	0.0000	0.0000
NBP[1]505*	0.0000	0.0000	0.0000	0.0000	0.0000	0.0000
NBP[1]531*	0.0000	0.0000	0.0000	0.0000	0.0000	0.0000
NBP[1]557*	0.0000	0.0000	0.0000	0.0000	0.0000	0.0000
NBP[1]582*	0.0000	0.0000	0.0000	0.0000	0.0000	0.0000
NBP[1]608*	0.0000	0.0000	0.0000	0.0000	0.0000	0.0000
NBP[1]634*	0.0000	0.0000	0.0000	0.0000	0.0000	0.0000
NBP[1]659*	0.0000	0.0000	0.0000	0.0000	0.0000	0.0000
NBP[1]685*	0.0000	0.0000	0.0000	0.0000	0.0000	0.0000
NBP[1]711*	0.0000	0.0000	0.0000	0.0000	0.0000	0.0000
NBP[1]736*	0.0000	0.0000	0.0000	0.0000	0.0000	0.0000
NBP[1]762*	0.0000	0.0000	0.0000	0.0000	0.0000	0.0000
NBP[1]788*	0.0000	0.0000	0.0000	0.0000	0.0000	0.0000
NBP[1]825*	0.0000	0.0000	0.0000	0.0000	0.0000	0.0000
NBP[1]873*	0.0000	0.0000	0.0000	0.0000	0.0000	0.0000
NBP[1]926*	0.0000	0.0000	0.0000	0.0000	0.0000	0.0000
NBP[1]978*	0.0000	0.0000	0.0000	0.0000	0.0000	0.0000
NBP[1]1021*	0.0000	0.0000	0.0000	0.0000	0.0000	0.0000
NBP[1]1075*	0.0000	0.0000	0.0000	0.0000	0.0000	0.0000
NBP[1]1123*	0.0000	0.0000	0.0000	0.0000	0.0000	0.0000
NBP[1]1173*	0.0000	0.0000	0.0000	0.0000	0.0000	0.0000
NBP[1]1250*	0.0000	0.0000	0.0000	0.0000	0.0000	0.0000
NBP[1]1339*	0.0000	0.0000	0.0000	0.0000	0.0000	0.0000
NBP[1]1432*	0.0000	0.0000	0.0000	0.0000	0.0000	0.0000
NBP[1]1528*	0.0000	0.0000	0.0000	0.0000	0.0000	0.0000
NBP[1]1637*	0.0000	0.0000	0.0000	0.0000	0.0000	0.0000
NBP[1]1732*	0.0000	0.0000	0.0000	0.0000	0.0000	0.0000

* Specified by user.

Material Stream: 3 (continued)

Fluid Package: Basis-1
Property Package: Peng-Robinson

COMPOSITION

Aqueous Phase (continued)

Phase Fraction 1.000

COMPONENTS	MOLAR FLOW (kgmole/h)	MOLE FRACTION	MASS FLOW (tonne/d)	MASS FRACTION	LIQUID VOLUME FLOW (m3/h)	LIQUID VOLUME FRACTION
NBP[1]1819*	0.0000	0.0000	0.0000	0.0000	0.0000	0.0000
NBP[1]1913*	0.0000	0.0000	0.0000	0.0000	0.0000	0.0000
Total	106.3369	1.0000	46.0026	1.0000	1.9210	1.0000

Material Stream: 4

Fluid Package: Basis-1
Property Package: Peng-Robinson

CONDITIONS

		Overall	Vapour Phase	Aqueous Phase		
Vapour / Phase Fraction		0.9992	0.9992	0.0008		
Temperature:	(F)	89.00 *	89.00	89.00		
Pressure:	(psig)	2090	2090	2090		
Molar Flow	(MMSCFD)	5.381	5.377	4.470e-003		
Mass Flow	(tonne/d)	137.6	137.5	9.639e-002		
Std Ideal Liq Vol Flow	(barrel/day)	2403	2402	0.6078		
Molar Enthalpy	(kJ/kgmole)	-9.218e+004	-9.202e+004	-2.856e+005		
Molar Entropy	(kJ/kgmole-C)	139.7	139.8	55.33		
Heat Flow	(MMBtu/hr)	-23.42	-23.36	-6.026e-002		
Liq Vol Flow @Std Cond	(barrel/day)	9.528e+005 *	9.521e+005	0.5972		

PROPERTIES

		Overall	Vapour Phase	Aqueous Phase		
Molecular Weight		21.39	21.39	18.04		
Molar Density	(kgmole/m3)	8.289	8.283	55.82		
Mass Density	(kg/m3)	177.3	177.2	1007		
Act. Volume Flow	(barrel/day)	4881	4880	0.6021		
Mass Enthalpy	(kJ/kg)	-4311	-4302	-1.583e+004		
Mass Entropy	(kJ/kg-C)	6.534	6.536	3.067		
Heat Capacity	(kJ/kgmole-C)	72.28	72.28	77.41		
Mass Heat Capacity	(kJ/kg-C)	3.380	3.379	4.291		
LHV Molar Basis (Std)	(Btu/SCF)	---	---	6.218e-004		
LHV Mass Basis (Std)	(kJ/kg)	---	---	3.042e-002		
Phase Fraction [Vol. Basis]		0.9997	0.9997	2.529e-004		
Phase Fraction [Mass Basis]		0.9993	0.9993	7.007e-004		
Partial Pressure of CO2	(psig)	57.08	---	---		
Cost Based on Flow	(Cost/s)	0.0000	0.0000	0.0000		
Act. Gas Flow	(ACT_m3/h)	32.33	32.33	---		
Avg. Liq. Density	(kgmole/m3)	16.84	16.83	55.29		
Specific Heat	(kJ/kgmole-C)	72.28	72.28	77.41		
Std. Gas Flow	(STD_m3/h)	6337	6332	5.264		
Std. Ideal Liq. Mass Density	(kg/m3)	360.1	359.9	997.5		
Act. Liq. Flow	(barrel/day)	0.6021	---	0.6021		
Z Factor		---	0.6913	0.1026		
Watson K		17.28	17.28	8.473		
User Property		---	---	---		
Partial Pressure of H2S	(psig)	-14.69	---	---		
Cp/(Cp - R)		1.130	1.130	1.120		
Cp/Cv		1.988	1.989	1.149		
Heat of Vap.	(kJ/kgmole)	---	---	---		
Kinematic Viscosity	(cSt)	---	0.1150	0.7977		
Liq. Mass Density (Std. Cond)	(kg/m3)	0.9081	0.9082	1015		
Liq. Vol. Flow (Std. Cond)	(barrel/day)	9.528e+005	9.521e+005	0.5972		
Liquid Fraction		8.306e-004	0.0000	1.000		
Molar Volume	(m3/kgmole)	0.1206	0.1207	1.791e-002		

* Specified by user.

Material Stream: 4 (continued)

Fluid Package: Basis-1
Property Package: Peng-Robinson

PROPERTIES

		Overall	Vapour Phase	Aqueous Phase		
Mass Heat of Vap.	(kJ/kg)	---	---	---		
Phase Fraction [Molar Basis]		0.9992	0.9992	0.0008		
Surface Tension	(dyne/cm)	70.87	---	70.87		
Thermal Conductivity	(W/m-K)	---	5.535e-002	0.6196		
Viscosity	(cP)	---	2.037e-002	0.8033		
Cv (Semi-Ideal)	(kJ/kgmole-C)	63.97	63.96	69.10		
Mass Cv (Semi-Ideal)	(kJ/kg-C)	2.991	2.990	3.830		
Cv	(kJ/kgmole-C)	36.36	36.33	67.39		
Mass Cv	(kJ/kg-C)	1.700	1.699	3.735		
Cv (Ent. Method)	(kJ/kgmole-C)	37.47	36.33	66.85		
Mass Cv (Ent. Method)	(kJ/kg-C)	1.752	1.699	3.705		
Cp/Cv (Ent. Method)		1.929	1.989	1.158		
Reid VP at 37.8 C	(psig)	---	---	---		
True VP at 37.8 C	(psig)	3607	---	176.8		
Liq. Vol. Flow - Sum(Std. Cond)	(barrel/day)	9.521e+005	9.521e+005	0.5972		
HHV Molar Basis (Std)	(Btu/SCF)	---	---	46.42		
HHV Mass Basis (Std)	(kJ/kg)	---	---	2271		
CO2 Loading		---	---	---		
CO2 App ML Con	(kgmole/m3)	---	---	5.413e-002		
CO2 App WT Con	(kgmol/kg)	---	---	5.375e-005		
Phase Fraction [Act. Vol. Basis]		0.9999	0.9999	1.233e-004		
Mass Exergy	(kJ/kg)	523.8	---	---		
Viscosity Index		---	---	---		
Ideal Gas Cp/Cv		1.248	1.248	1.329		
Ideal Gas Cp	(kJ/kgmole-C)	41.87	41.87	33.62		
Mass Ideal Gas Cp	(kJ/kg-C)	1.958	1.958	1.863		
Bubble Point Pressure	(psig)	4590	---	---		

COMPOSITION

Overall Phase

Vapour Fraction 0.9992

COMPONENTS	MOLAR FLOW (kgmole/h)	MOLE FRACTION	MASS FLOW (tonne/d)	MASS FRACTION	LIQUID VOLUME FLOW (m3/h)	LIQUID VOLUME FRACTION
Methane	205.0219	0.7649	78.9395	0.5738	10.9860	0.6901
Ethane	27.6541	0.1032	19.9573	0.1451	2.3379	0.1469
Propane	13.5902	0.0507	14.3829	0.1046	1.1828	0.0743
i-Butane	1.5866	0.0059	2.2133	0.0161	0.1641	0.0103
n-Butane	2.8841	0.0108	4.0233	0.0292	0.2874	0.0181
i-Pentane	0.4635	0.0017	0.8025	0.0058	0.0536	0.0034
n-Pentane	0.4652	0.0017	0.8056	0.0059	0.0533	0.0033
n-Hexane	0.3694	0.0014	0.7639	0.0056	0.0480	0.0030
Nitrogen	5.5752	0.0208	3.7483	0.0272	0.1937	0.0122
CO2	9.1335	0.0341	9.6471	0.0701	0.4870	0.0306
H2S	0.0005	0.0000	0.0004	0.0000	0.0000	0.0000
H2O	0.3945	0.0015	0.1706	0.0012	0.0071	0.0004
NBP[1]95*	0.1425	0.0005	0.2323	0.0017	0.0142	0.0009
NBP[1]121*	0.1318	0.0005	0.2305	0.0017	0.0139	0.0009
NBP[1]147*	0.1254	0.0005	0.2414	0.0018	0.0144	0.0009
NBP[1]171*	0.1733	0.0006	0.3646	0.0027	0.0213	0.0013
NBP[1]195*	0.1579	0.0006	0.3546	0.0026	0.0205	0.0013
NBP[1]222*	0.0732	0.0003	0.1768	0.0013	0.0101	0.0006
NBP[1]248*	0.0375	0.0001	0.0974	0.0007	0.0055	0.0003
NBP[1]273*	0.0181	0.0001	0.0503	0.0004	0.0028	0.0002
NBP[1]299*	0.0083	0.0000	0.0245	0.0002	0.0014	0.0001
NBP[1]325*	0.0033	0.0000	0.0105	0.0001	0.0006	0.0000
NBP[1]351*	0.0015	0.0000	0.0050	0.0000	0.0003	0.0000
NBP[1]377*	0.0007	0.0000	0.0025	0.0000	0.0001	0.0000

Licensed to: PETROCHEMICAL ENGINEERIN
* Specified by user.

Material Stream: 4 (continued)

Fluid Package: Basis-1
Property Package: Peng-Robinson

COMPOSITION

Overall Phase (continued)

Vapour Fraction 0.9992

COMPONENTS	MOLAR FLOW (kgmole/h)	MOLE FRACTION	MASS FLOW (tonne/d)	MASS FRACTION	LIQUID VOLUME FLOW (m3/h)	LIQUID VOLUME FRACTION
NBP[1]402*	0.0003	0.0000	0.0013	0.0000	0.0001	0.0000
NBP[1]428*	0.0002	0.0000	0.0007	0.0000	0.0000	0.0000
NBP[1]454*	0.0001	0.0000	0.0003	0.0000	0.0000	0.0000
NBP[1]480*	0.0000	0.0000	0.0002	0.0000	0.0000	0.0000
NBP[1]505*	0.0000	0.0000	0.0001	0.0000	0.0000	0.0000
NBP[1]531*	0.0000	0.0000	0.0000	0.0000	0.0000	0.0000
NBP[1]557*	0.0000	0.0000	0.0000	0.0000	0.0000	0.0000
NBP[1]582*	0.0000	0.0000	0.0000	0.0000	0.0000	0.0000
NBP[1]608*	0.0000	0.0000	0.0000	0.0000	0.0000	0.0000
NBP[1]634*	0.0000	0.0000	0.0000	0.0000	0.0000	0.0000
NBP[1]659*	0.0000	0.0000	0.0000	0.0000	0.0000	0.0000
NBP[1]685*	0.0000	0.0000	0.0000	0.0000	0.0000	0.0000
NBP[1]711*	0.0000	0.0000	0.0000	0.0000	0.0000	0.0000
NBP[1]736*	0.0000	0.0000	0.0000	0.0000	0.0000	0.0000
NBP[1]762*	0.0000	0.0000	0.0000	0.0000	0.0000	0.0000
NBP[1]788*	0.0000	0.0000	0.0000	0.0000	0.0000	0.0000
NBP[1]825*	0.0000	0.0000	0.0000	0.0000	0.0000	0.0000
NBP[1]873*	0.0000	0.0000	0.0000	0.0000	0.0000	0.0000
NBP[1]926*	0.0000	0.0000	0.0000	0.0000	0.0000	0.0000
NBP[1]978*	0.0000	0.0000	0.0000	0.0000	0.0000	0.0000
NBP[1]1021*	0.0000	0.0000	0.0000	0.0000	0.0000	0.0000
NBP[1]1075*	0.0000	0.0000	0.0000	0.0000	0.0000	0.0000
NBP[1]1123*	0.0000	0.0000	0.0000	0.0000	0.0000	0.0000
NBP[1]1173*	0.0000	0.0000	0.0000	0.0000	0.0000	0.0000
NBP[1]1250*	0.0000	0.0000	0.0000	0.0000	0.0000	0.0000
NBP[1]1339*	0.0000	0.0000	0.0000	0.0000	0.0000	0.0000
NBP[1]1432*	0.0000	0.0000	0.0000	0.0000	0.0000	0.0000
NBP[1]1528*	0.0000	0.0000	0.0000	0.0000	0.0000	0.0000
NBP[1]1637*	0.0000	0.0000	0.0000	0.0000	0.0000	0.0000
NBP[1]1732*	0.0000	0.0000	0.0000	0.0000	0.0000	0.0000
NBP[1]1819*	0.0001	0.0000	0.0029	0.0000	0.0001	0.0000
NBP[1]1913*	0.0112	0.0000	0.3148	0.0023	0.0121	0.0008
Total	268.0242	1.0000	137.5655	1.0000	15.9186	1.0000

Vapour Phase

Phase Fraction 0.9992

COMPONENTS	MOLAR FLOW (kgmole/h)	MOLE FRACTION	MASS FLOW (tonne/d)	MASS FRACTION	LIQUID VOLUME FLOW (m3/h)	LIQUID VOLUME FRACTION
Methane	205.0219	0.7656	78.9395	0.5742	10.9860	0.6903
Ethane	27.6541	0.1033	19.9573	0.1452	2.3379	0.1469
Propane	13.5902	0.0507	14.3829	0.1046	1.1828	0.0743
i-Butane	1.5866	0.0059	2.2133	0.0161	0.1641	0.0103
n-Butane	2.8841	0.0108	4.0233	0.0293	0.2874	0.0181
i-Pentane	0.4635	0.0017	0.8025	0.0058	0.0536	0.0034
n-Pentane	0.4652	0.0017	0.8056	0.0059	0.0533	0.0033
n-Hexane	0.3694	0.0014	0.7639	0.0056	0.0480	0.0030
Nitrogen	5.5752	0.0208	3.7483	0.0273	0.1937	0.0122
CO2	9.1333	0.0341	9.6469	0.0702	0.4870	0.0306
H2S	0.0005	0.0000	0.0004	0.0000	0.0000	0.0000
H2O	0.1721	0.0006	0.0744	0.0005	0.0031	0.0002
NBP[1]95*	0.1425	0.0005	0.2323	0.0017	0.0142	0.0009
NBP[1]121*	0.1318	0.0005	0.2305	0.0017	0.0139	0.0009
NBP[1]147*	0.1254	0.0005	0.2414	0.0018	0.0144	0.0009
NBP[1]171*	0.1733	0.0006	0.3646	0.0027	0.0213	0.0013
NBP[1]195*	0.1579	0.0006	0.3546	0.0026	0.0205	0.0013

* Specified by user.

Material Stream: 4 (continued)

Fluid Package: Basis-1
Property Package: Peng-Robinson

COMPOSITION

Vapour Phase (continued)

Phase Fraction 0.9992

COMPONENTS	MOLAR FLOW (kgmole/h)	MOLE FRACTION	MASS FLOW (tonne/d)	MASS FRACTION	LIQUID VOLUME FLOW (m3/h)	LIQUID VOLUME FRACTION
NBP[1]222*	0.0732	0.0003	0.1768	0.0013	0.0101	0.0006
NBP[1]248*	0.0375	0.0001	0.0974	0.0007	0.0055	0.0003
NBP[1]273*	0.0181	0.0001	0.0503	0.0004	0.0028	0.0002
NBP[1]299*	0.0083	0.0000	0.0245	0.0002	0.0014	0.0001
NBP[1]325*	0.0033	0.0000	0.0105	0.0001	0.0006	0.0000
NBP[1]351*	0.0015	0.0000	0.0050	0.0000	0.0003	0.0000
NBP[1]377*	0.0007	0.0000	0.0025	0.0000	0.0001	0.0000
NBP[1]402*	0.0003	0.0000	0.0013	0.0000	0.0001	0.0000
NBP[1]428*	0.0002	0.0000	0.0007	0.0000	0.0000	0.0000
NBP[1]454*	0.0001	0.0000	0.0003	0.0000	0.0000	0.0000
NBP[1]480*	0.0000	0.0000	0.0002	0.0000	0.0000	0.0000
NBP[1]505*	0.0000	0.0000	0.0001	0.0000	0.0000	0.0000
NBP[1]531*	0.0000	0.0000	0.0000	0.0000	0.0000	0.0000
NBP[1]557*	0.0000	0.0000	0.0000	0.0000	0.0000	0.0000
NBP[1]582*	0.0000	0.0000	0.0000	0.0000	0.0000	0.0000
NBP[1]608*	0.0000	0.0000	0.0000	0.0000	0.0000	0.0000
NBP[1]634*	0.0000	0.0000	0.0000	0.0000	0.0000	0.0000
NBP[1]659*	0.0000	0.0000	0.0000	0.0000	0.0000	0.0000
NBP[1]685*	0.0000	0.0000	0.0000	0.0000	0.0000	0.0000
NBP[1]711*	0.0000	0.0000	0.0000	0.0000	0.0000	0.0000
NBP[1]736*	0.0000	0.0000	0.0000	0.0000	0.0000	0.0000
NBP[1]762*	0.0000	0.0000	0.0000	0.0000	0.0000	0.0000
NBP[1]788*	0.0000	0.0000	0.0000	0.0000	0.0000	0.0000
NBP[1]825*	0.0000	0.0000	0.0000	0.0000	0.0000	0.0000
NBP[1]873*	0.0000	0.0000	0.0000	0.0000	0.0000	0.0000
NBP[1]926*	0.0000	0.0000	0.0000	0.0000	0.0000	0.0000
NBP[1]978*	0.0000	0.0000	0.0000	0.0000	0.0000	0.0000
NBP[1]1021*	0.0000	0.0000	0.0000	0.0000	0.0000	0.0000
NBP[1]1075*	0.0000	0.0000	0.0000	0.0000	0.0000	0.0000
NBP[1]1123*	0.0000	0.0000	0.0000	0.0000	0.0000	0.0000
NBP[1]1173*	0.0000	0.0000	0.0000	0.0000	0.0000	0.0000
NBP[1]1250*	0.0000	0.0000	0.0000	0.0000	0.0000	0.0000
NBP[1]1339*	0.0000	0.0000	0.0000	0.0000	0.0000	0.0000
NBP[1]1432*	0.0000	0.0000	0.0000	0.0000	0.0000	0.0000
NBP[1]1528*	0.0000	0.0000	0.0000	0.0000	0.0000	0.0000
NBP[1]1637*	0.0000	0.0000	0.0000	0.0000	0.0000	0.0000
NBP[1]1732*	0.0000	0.0000	0.0000	0.0000	0.0000	0.0000
NBP[1]1819*	0.0001	0.0000	0.0029	0.0000	0.0001	0.0000
NBP[1]1913*	0.0112	0.0000	0.3148	0.0023	0.0121	0.0008
Total	267.8016	1.0000	137.4691	1.0000	15.9145	1.0000

Aqueous Phase

Phase Fraction 8.306e-004

COMPONENTS	MOLAR FLOW (kgmole/h)	MOLE FRACTION	MASS FLOW (tonne/d)	MASS FRACTION	LIQUID VOLUME FLOW (m3/h)	LIQUID VOLUME FRACTION
Methane	0.0000	0.0000	0.0000	0.0000	0.0000	0.0000
Ethane	0.0000	0.0000	0.0000	0.0000	0.0000	0.0000
Propane	0.0000	0.0000	0.0000	0.0000	0.0000	0.0000
i-Butane	0.0000	0.0000	0.0000	0.0000	0.0000	0.0000
n-Butane	0.0000	0.0000	0.0000	0.0000	0.0000	0.0000
i-Pentane	0.0000	0.0000	0.0000	0.0000	0.0000	0.0000
n-Pentane	0.0000	0.0000	0.0000	0.0000	0.0000	0.0000
n-Hexane	0.0000	0.0000	0.0000	0.0000	0.0000	0.0000
Nitrogen	0.0000	0.0000	0.0000	0.0001	0.0000	0.0001
CO2	0.0002	0.0010	0.0002	0.0024	0.0000	0.0029

* Specified by user.

Material Stream: 4 (continued)

Fluid Package: Basis-1
Property Package: Peng-Robinson

COMPOSITION

Aqueous Phase (continued)

Phase Fraction 8.306e-004

COMPONENTS	MOLAR FLOW (kgmole/h)	MOLE FRACTION	MASS FLOW (tonne/d)	MASS FRACTION	LIQUID VOLUME FLOW (m3/h)	LIQUID VOLUME FRACTION
H2S	0.0000	0.0000	0.0000	0.0000	0.0000	0.0000
H2O	0.2224	0.9990	0.0962	0.9976	0.0040	0.9971
NBP[1]95*	0.0000	0.0000	0.0000	0.0000	0.0000	0.0000
NBP[1]121*	0.0000	0.0000	0.0000	0.0000	0.0000	0.0000
NBP[1]147*	0.0000	0.0000	0.0000	0.0000	0.0000	0.0000
NBP[1]171*	0.0000	0.0000	0.0000	0.0000	0.0000	0.0000
NBP[1]195*	0.0000	0.0000	0.0000	0.0000	0.0000	0.0000
NBP[1]222*	0.0000	0.0000	0.0000	0.0000	0.0000	0.0000
NBP[1]248*	0.0000	0.0000	0.0000	0.0000	0.0000	0.0000
NBP[1]273*	0.0000	0.0000	0.0000	0.0000	0.0000	0.0000
NBP[1]299*	0.0000	0.0000	0.0000	0.0000	0.0000	0.0000
NBP[1]325*	0.0000	0.0000	0.0000	0.0000	0.0000	0.0000
NBP[1]351*	0.0000	0.0000	0.0000	0.0000	0.0000	0.0000
NBP[1]377*	0.0000	0.0000	0.0000	0.0000	0.0000	0.0000
NBP[1]402*	0.0000	0.0000	0.0000	0.0000	0.0000	0.0000
NBP[1]428*	0.0000	0.0000	0.0000	0.0000	0.0000	0.0000
NBP[1]454*	0.0000	0.0000	0.0000	0.0000	0.0000	0.0000
NBP[1]480*	0.0000	0.0000	0.0000	0.0000	0.0000	0.0000
NBP[1]505*	0.0000	0.0000	0.0000	0.0000	0.0000	0.0000
NBP[1]531*	0.0000	0.0000	0.0000	0.0000	0.0000	0.0000
NBP[1]557*	0.0000	0.0000	0.0000	0.0000	0.0000	0.0000
NBP[1]582*	0.0000	0.0000	0.0000	0.0000	0.0000	0.0000
NBP[1]608*	0.0000	0.0000	0.0000	0.0000	0.0000	0.0000
NBP[1]634*	0.0000	0.0000	0.0000	0.0000	0.0000	0.0000
NBP[1]659*	0.0000	0.0000	0.0000	0.0000	0.0000	0.0000
NBP[1]685*	0.0000	0.0000	0.0000	0.0000	0.0000	0.0000
NBP[1]711*	0.0000	0.0000	0.0000	0.0000	0.0000	0.0000
NBP[1]736*	0.0000	0.0000	0.0000	0.0000	0.0000	0.0000
NBP[1]762*	0.0000	0.0000	0.0000	0.0000	0.0000	0.0000
NBP[1]788*	0.0000	0.0000	0.0000	0.0000	0.0000	0.0000
NBP[1]825*	0.0000	0.0000	0.0000	0.0000	0.0000	0.0000
NBP[1]873*	0.0000	0.0000	0.0000	0.0000	0.0000	0.0000
NBP[1]926*	0.0000	0.0000	0.0000	0.0000	0.0000	0.0000
NBP[1]978*	0.0000	0.0000	0.0000	0.0000	0.0000	0.0000
NBP[1]1021*	0.0000	0.0000	0.0000	0.0000	0.0000	0.0000
NBP[1]1075*	0.0000	0.0000	0.0000	0.0000	0.0000	0.0000
NBP[1]1123*	0.0000	0.0000	0.0000	0.0000	0.0000	0.0000
NBP[1]1173*	0.0000	0.0000	0.0000	0.0000	0.0000	0.0000
NBP[1]1250*	0.0000	0.0000	0.0000	0.0000	0.0000	0.0000
NBP[1]1339*	0.0000	0.0000	0.0000	0.0000	0.0000	0.0000
NBP[1]1432*	0.0000	0.0000	0.0000	0.0000	0.0000	0.0000
NBP[1]1528*	0.0000	0.0000	0.0000	0.0000	0.0000	0.0000
NBP[1]1637*	0.0000	0.0000	0.0000	0.0000	0.0000	0.0000
NBP[1]1732*	0.0000	0.0000	0.0000	0.0000	0.0000	0.0000
NBP[1]1819*	0.0000	0.0000	0.0000	0.0000	0.0000	0.0000
NBP[1]1913*	0.0000	0.0000	0.0000	0.0000	0.0000	0.0000
Total	0.2226	1.0000	0.0964	1.0000	0.0040	1.0000

Material Stream: 5

Fluid Package: Basis-1
Property Package: Peng-Robinson

CONDITIONS

	Overall	Vapour Phase	Liquid Phase	Aqueous Phase
Vapour / Phase Fraction	0.6644	0.6644	0.0637	0.2719

Licensed to: PETROCHEMICAL ENGINEERIN
* Specified by user.

Material Stream: 5 (continued)

Fluid Package: Basis-1
Property Package: Peng-Robinson

CONDITIONS

		Overall	Vapour Phase	Liquid Phase	Aqueous Phase
Temperature:	(F)	89.98	89.98	89.98	89.98
Pressure:	(psig)	2090	2090	2090	2090
Molar Flow	(MMSCFD)	7.874	5.231	0.5019	2.140
Mass Flow	(tonne/d)	237.5	139.1	52.25	46.16
Std Ideal Liq Vol Flow	(barrel/day)	3142	2371	479.9	291.0
Molar Enthalpy	(kJ/kgmole)	-1.534e+005	-9.314e+004	-2.178e+005	-2.855e+005
Molar Entropy	(kJ/kgmole-C)	120.5	139.7	197.5	55.46
Heat Flow	(MMBtu/hr)	-57.01	-23.00	-5.161	-28.85
Liq Vol Flow @Std Cond	(barrel/day)	2.954e+005 *	9.260e+005	461.5	286.0

PROPERTIES

		Overall	Vapour Phase	Liquid Phase	Aqueous Phase
Molecular Weight		25.24	22.25	87.09	18.04
Molar Density	(kgmole/m3)	10.98	8.487	8.041	55.80
Mass Density	(kg/m3)	277.1	188.8	700.3	1007
Act. Volume Flow	(barrel/day)	5392	4634	469.3	288.4
Mass Enthalpy	(kJ/kg)	-6077	-4186	-2501	-1.583e+004
Mass Entropy	(kJ/kg-C)	4.773	6.278	2.268	3.074
Heat Capacity	(kJ/kgmole-C)	83.30	76.12	183.3	77.41
Mass Heat Capacity	(kJ/kg-C)	3.300	3.421	2.104	4.291
LHV Molar Basis (Std)	(Btu/SCF)	---	---	---	6.334e-004
LHV Mass Basis (Std)	(kJ/kg)	---	---	---	3.099e-002
Phase Fraction [Vol. Basis]		0.7547	0.7547	0.1527	9.262e-002
Phase Fraction [Mass Basis]		0.5858	0.5858	0.2199	0.1943
Partial Pressure of CO2	(psig)	54.43	---	---	---
Cost Based on Flow	(Cost/s)	0.0000	0.0000	0.0000	0.0000
Act. Gas Flow	(ACT_m3/h)	30.70	30.70	---	---
Avg. Liq. Density	(kgmole/m3)	18.84	16.59	7.864	55.30
Specific Heat	(kJ/kgmole-C)	83.30	76.12	183.3	77.41
Std. Gas Flow	(STD_m3/h)	9272	6161	591.0	2521
Std. Ideal Liq. Mass Density	(kg/m3)	475.5	369.1	684.8	997.5
Act. Liq. Flow	(barrel/day)	757.7	---	469.3	288.4
Z Factor		---	0.6735	0.7108	0.1024
Watson K		15.58	16.99	12.28	8.469
User Property		---	---	---	---
Partial Pressure of H2S	(psig)	-14.69	---	---	---
Cp/(Cp - R)		1.111	1.123	1.048	1.120
Cp/Cv		1.471	2.007	1.291	1.149
Heat of Vap.	(kJ/kgmole)	6.038e+004	---	---	---
Kinematic Viscosity	(cSt)	---	0.1117	1.948	0.7558
Liq. Mass Density (Std. Cond)	(kg/m3)	5.058	0.9452	712.1	1015
Liq. Vol. Flow (Std. Cond)	(barrel/day)	2.954e+005	9.260e+005	461.5	286.0
Liquid Fraction		0.3356	0.0000	1.000	1.000
Molar Volume	(m3/kgmole)	9.108e-002	0.1178	0.1244	1.792e-002
Mass Heat of Vap.	(kJ/kg)	2392	---	---	---
Phase Fraction [Molar Basis]		0.6644	0.6644	0.0637	0.2719
Surface Tension	(dyne/cm)	---	---	9.238	70.78
Thermal Conductivity	(W/m-K)	---	5.650e-002	8.530e-002	0.6213
Viscosity	(cP)	---	2.109e-002	1.364	0.7608
Cv (Semi-Ideal)	(kJ/kgmole-C)	74.98	67.80	175.0	69.10
Mass Cv (Semi-Ideal)	(kJ/kg-C)	2.971	3.047	2.009	3.831
Cv	(kJ/kgmole-C)	56.65	37.93	142.0	67.38
Mass Cv	(kJ/kg-C)	2.244	1.705	1.630	3.735
Cv (Ent. Method)	(kJ/kgmole-C)	---	36.85	---	66.76
Mass Cv (Ent. Method)	(kJ/kg-C)	---	1.656	---	3.701
Cp/Cv (Ent. Method)		---	2.065	---	1.160
Reid VP at 37.8 C	(psig)	3319	2452	399.0	---

* Specified by user.

Material Stream: 5 (continued)

Fluid Package: Basis-1
Property Package: Peng-Robinson

PROPERTIES

		Overall	Vapour Phase	Liquid Phase	Aqueous Phase
True VP at 37.8 C	(psig)	6318	2453	2168	182.1
Liq. Vol. Flow - Sum(Std. Cond)	(barrel/day)	9.267e+005	9.260e+005	461.5	286.0
HHV Molar Basis (Std)	(Btu/SCF)	---	---	---	46.42
HHV Mass Basis (Std)	(kJ/kg)	---	---	---	2271
CO2 Loading		---	---	---	---
CO2 App ML Con	(kgmole/m3)	---	---	0.2444	5.118e-002
CO2 App WT Con	(kgmol/kg)	---	---	3.490e-004	5.084e-005
Phase Fraction [Act. Vol. Basis]		0.8595	0.8595	8.703e-002	5.349e-002
Mass Exergy	(kJ/kg)	317.7	---	---	---
Viscosity Index		-33.28	---	---	---
Ideal Gas Cp/Cv		1.215	1.238	1.062	1.329
Ideal Gas Cp	(kJ/kgmole-C)	46.91	43.24	141.8	33.62
Mass Ideal Gas Cp	(kJ/kg-C)	1.859	1.943	1.628	1.864
Bubble Point Pressure	(psig)	6228	---	---	---

COMPOSITION

Overall Phase

Vapour Fraction 0.6644

COMPONENTS	MOLAR FLOW (kgmole/h)	MOLE FRACTION	MASS FLOW (tonne/d)	MASS FRACTION	LIQUID VOLUME FLOW (m3/h)	LIQUID VOLUME FRACTION
Methane	207.0440	0.5280	79.7181	0.3356	11.0944	0.5330
Ethane	28.8006	0.0734	20.7848	0.0875	2.4348	0.1170
Propane	15.2677	0.0389	16.1583	0.0680	1.3288	0.0638
i-Butane	2.0287	0.0052	2.8300	0.0119	0.2098	0.0101
n-Butane	3.9513	0.0101	5.5120	0.0232	0.3938	0.0189
i-Pentane	0.8495	0.0022	1.4710	0.0062	0.0983	0.0047
n-Pentane	0.9602	0.0024	1.6627	0.0070	0.1100	0.0053
n-Hexane	1.4698	0.0037	3.0399	0.0128	0.1911	0.0092
Nitrogen	5.5989	0.0143	3.7642	0.0158	0.1945	0.0093
CO2	9.4151	0.0240	9.9445	0.0419	0.5020	0.0241
H2S	0.0006	0.0000	0.0005	0.0000	0.0000	0.0000
H2O	106.6990	0.2721	46.1326	0.1942	1.9261	0.0925
NBP[1]95*	0.2883	0.0007	0.4699	0.0020	0.0288	0.0014
NBP[1]121*	0.3381	0.0009	0.5912	0.0025	0.0358	0.0017
NBP[1]147*	0.4314	0.0011	0.8304	0.0035	0.0494	0.0024
NBP[1]171*	0.8224	0.0021	1.7306	0.0073	0.1013	0.0049
NBP[1]195*	1.0758	0.0027	2.4160	0.0102	0.1398	0.0067
NBP[1]222*	0.8003	0.0020	1.9331	0.0081	0.1105	0.0053
NBP[1]248*	0.6657	0.0017	1.7287	0.0073	0.0976	0.0047
NBP[1]273*	0.5358	0.0014	1.4881	0.0063	0.0831	0.0040
NBP[1]299*	0.4185	0.0011	1.2393	0.0052	0.0684	0.0033
NBP[1]325*	0.3029	0.0008	0.9528	0.0040	0.0521	0.0025
NBP[1]351*	0.2456	0.0006	0.8214	0.0035	0.0445	0.0021
NBP[1]377*	0.2247	0.0006	0.8014	0.0034	0.0429	0.0021
NBP[1]402*	0.2061	0.0005	0.7838	0.0033	0.0416	0.0020
NBP[1]428*	0.1961	0.0005	0.7956	0.0033	0.0418	0.0020
NBP[1]454*	0.1956	0.0005	0.8480	0.0036	0.0441	0.0021
NBP[1]480*	0.1982	0.0005	0.9182	0.0039	0.0473	0.0023
NBP[1]505*	0.1920	0.0005	0.9484	0.0040	0.0484	0.0023
NBP[1]531*	0.1852	0.0005	0.9740	0.0041	0.0492	0.0024
NBP[1]557*	0.1784	0.0005	0.9978	0.0042	0.0500	0.0024
NBP[1]582*	0.1706	0.0004	1.0132	0.0043	0.0503	0.0024
NBP[1]608*	0.1643	0.0004	1.0351	0.0044	0.0510	0.0025
NBP[1]634*	0.1611	0.0004	1.0753	0.0045	0.0526	0.0025
NBP[1]659*	0.1586	0.0004	1.1194	0.0047	0.0543	0.0026
NBP[1]685*	0.1641	0.0004	1.2227	0.0051	0.0588	0.0028
NBP[1]711*	0.1715	0.0004	1.3445	0.0057	0.0642	0.0031

* Specified by user.

Material Stream: 5 (continued)

Fluid Package: Basis-1
Property Package: Peng-Robinson

COMPOSITION

Overall Phase (continued)

Vapour Fraction 0.6644

COMPONENTS	MOLAR FLOW (kgmole/h)	MOLE FRACTION	MASS FLOW (tonne/d)	MASS FRACTION	LIQUID VOLUME FLOW (m3/h)	LIQUID VOLUME FRACTION
NBP[1]736*	0.1697	0.0004	1.3915	0.0059	0.0659	0.0032
NBP[1]762*	0.1653	0.0004	1.4214	0.0060	0.0669	0.0032
NBP[1]788*	0.1585	0.0004	1.4424	0.0061	0.0674	0.0032
NBP[1]825*	0.2655	0.0007	2.5963	0.0109	0.1201	0.0058
NBP[1]873*	0.1830	0.0005	1.9404	0.0082	0.0887	0.0043
NBP[1]926*	0.1437	0.0004	1.6472	0.0069	0.0744	0.0036
NBP[1]978*	0.1474	0.0004	1.8524	0.0078	0.0825	0.0040
NBP[1]1021*	0.0728	0.0002	0.9655	0.0041	0.0426	0.0020
NBP[1]1075*	0.0449	0.0001	0.6310	0.0027	0.0276	0.0013
NBP[1]1123*	0.0417	0.0001	0.6267	0.0026	0.0271	0.0013
NBP[1]1173*	0.0300	0.0001	0.4772	0.0020	0.0205	0.0010
NBP[1]1250*	0.0393	0.0001	0.6767	0.0028	0.0287	0.0014
NBP[1]1339*	0.0364	0.0001	0.6999	0.0029	0.0291	0.0014
NBP[1]1432*	0.0257	0.0001	0.5397	0.0023	0.0221	0.0011
NBP[1]1528*	0.0180	0.0000	0.4082	0.0017	0.0165	0.0008
NBP[1]1637*	0.0127	0.0000	0.3047	0.0013	0.0122	0.0006
NBP[1]1732*	0.0101	0.0000	0.2565	0.0011	0.0101	0.0005
NBP[1]1819*	0.0097	0.0000	0.2590	0.0011	0.0101	0.0005
NBP[1]1913*	0.0112	0.0000	0.3148	0.0013	0.0121	0.0006
Total	392.1623	1.0000	237.5489	1.0000	20.8162	1.0000

Vapour Phase

Phase Fraction 0.6644

COMPONENTS	MOLAR FLOW (kgmole/h)	MOLE FRACTION	MASS FLOW (tonne/d)	MASS FRACTION	LIQUID VOLUME FLOW (m3/h)	LIQUID VOLUME FRACTION
Methane	197.5775	0.7583	76.0732	0.5467	10.5871	0.6739
Ethane	26.2225	0.1006	18.9242	0.1360	2.2169	0.1411
Propane	13.0983	0.0503	13.8623	0.0996	1.1400	0.0726
i-Butane	1.6359	0.0063	2.2820	0.0164	0.1692	0.0108
n-Butane	3.0834	0.0118	4.3013	0.0309	0.3073	0.0196
i-Pentane	0.6045	0.0023	1.0467	0.0075	0.0700	0.0045
n-Pentane	0.6554	0.0025	1.1349	0.0082	0.0751	0.0048
n-Hexane	0.8360	0.0032	1.7292	0.0124	0.1087	0.0069
Nitrogen	5.4316	0.0208	3.6517	0.0262	0.1887	0.0120
CO2	8.5576	0.0328	9.0388	0.0650	0.4563	0.0290
H2S	0.0005	0.0000	0.0004	0.0000	0.0000	0.0000
H2O	0.1735	0.0007	0.0750	0.0005	0.0031	0.0002
NBP[1]95*	0.1967	0.0008	0.3207	0.0023	0.0197	0.0013
NBP[1]121*	0.2150	0.0008	0.3759	0.0027	0.0227	0.0014
NBP[1]147*	0.2517	0.0010	0.4844	0.0035	0.0288	0.0018
NBP[1]171*	0.4368	0.0017	0.9192	0.0066	0.0538	0.0034
NBP[1]195*	0.5145	0.0020	1.1554	0.0083	0.0668	0.0043
NBP[1]222*	0.3330	0.0013	0.8042	0.0058	0.0460	0.0029
NBP[1]248*	0.2380	0.0009	0.6181	0.0044	0.0349	0.0022
NBP[1]273*	0.1618	0.0006	0.4493	0.0032	0.0251	0.0016
NBP[1]299*	0.1047	0.0004	0.3099	0.0022	0.0171	0.0011
NBP[1]325*	0.0612	0.0002	0.1925	0.0014	0.0105	0.0007
NBP[1]351*	0.0393	0.0002	0.1314	0.0009	0.0071	0.0005
NBP[1]377*	0.0276	0.0001	0.0984	0.0007	0.0053	0.0003
NBP[1]402*	0.0192	0.0001	0.0730	0.0005	0.0039	0.0002
NBP[1]428*	0.0136	0.0001	0.0550	0.0004	0.0029	0.0002
NBP[1]454*	0.0099	0.0000	0.0428	0.0003	0.0022	0.0001
NBP[1]480*	0.0072	0.0000	0.0333	0.0002	0.0017	0.0001
NBP[1]505*	0.0049	0.0000	0.0243	0.0002	0.0012	0.0001
NBP[1]531*	0.0033	0.0000	0.0174	0.0001	0.0009	0.0001

* Specified by user.

Material Stream: 5 (continued)

Fluid Package: Basis-1
Property Package: Peng-Robinson

COMPOSITION

Vapour Phase (continued)

Phase Fraction 0.6644

COMPONENTS	MOLAR FLOW (kgmole/h)	MOLE FRACTION	MASS FLOW (tonne/d)	MASS FRACTION	LIQUID VOLUME FLOW (m3/h)	LIQUID VOLUME FRACTION
NBP[1]557*	0.0022	0.0000	0.0122	0.0001	0.0006	0.0000
NBP[1]582*	0.0014	0.0000	0.0084	0.0001	0.0004	0.0000
NBP[1]608*	0.0009	0.0000	0.0057	0.0000	0.0003	0.0000
NBP[1]634*	0.0006	0.0000	0.0039	0.0000	0.0002	0.0000
NBP[1]659*	0.0004	0.0000	0.0026	0.0000	0.0001	0.0000
NBP[1]685*	0.0002	0.0000	0.0018	0.0000	0.0001	0.0000
NBP[1]711*	0.0002	0.0000	0.0013	0.0000	0.0001	0.0000
NBP[1]736*	0.0001	0.0000	0.0008	0.0000	0.0000	0.0000
NBP[1]762*	0.0001	0.0000	0.0005	0.0000	0.0000	0.0000
NBP[1]788*	0.0000	0.0000	0.0003	0.0000	0.0000	0.0000
NBP[1]825*	0.0000	0.0000	0.0003	0.0000	0.0000	0.0000
NBP[1]873*	0.0000	0.0000	0.0001	0.0000	0.0000	0.0000
NBP[1]926*	0.0000	0.0000	0.0000	0.0000	0.0000	0.0000
NBP[1]978*	0.0000	0.0000	0.0000	0.0000	0.0000	0.0000
NBP[1]1021*	0.0000	0.0000	0.0000	0.0000	0.0000	0.0000
NBP[1]1075*	0.0000	0.0000	0.0000	0.0000	0.0000	0.0000
NBP[1]1123*	0.0000	0.0000	0.0000	0.0000	0.0000	0.0000
NBP[1]1173*	0.0000	0.0000	0.0000	0.0000	0.0000	0.0000
NBP[1]1250*	0.0000	0.0000	0.0000	0.0000	0.0000	0.0000
NBP[1]1339*	0.0000	0.0000	0.0000	0.0000	0.0000	0.0000
NBP[1]1432*	0.0000	0.0000	0.0000	0.0000	0.0000	0.0000
NBP[1]1528*	0.0000	0.0000	0.0000	0.0000	0.0000	0.0000
NBP[1]1637*	0.0022	0.0000	0.0525	0.0004	0.0021	0.0001
NBP[1]1732*	0.0101	0.0000	0.2565	0.0018	0.0101	0.0006
NBP[1]1819*	0.0097	0.0000	0.2590	0.0019	0.0101	0.0006
NBP[1]1913*	0.0112	0.0000	0.3148	0.0023	0.0121	0.0008
Total	260.5541	1.0000	139.1456	1.0000	15.7094	1.0000

Liquid Phase

Phase Fraction 6.374e-002

COMPONENTS	MOLAR FLOW (kgmole/h)	MOLE FRACTION	MASS FLOW (tonne/d)	MASS FRACTION	LIQUID VOLUME FLOW (m3/h)	LIQUID VOLUME FRACTION
Methane	9.4664	0.3787	3.6448	0.0698	0.5073	0.1596
Ethane	2.5781	0.1031	1.8606	0.0356	0.2180	0.0686
Propane	2.1695	0.0868	2.2960	0.0439	0.1888	0.0594
i-Butane	0.3928	0.0157	0.5480	0.0105	0.0406	0.0128
n-Butane	0.8679	0.0347	1.2107	0.0232	0.0865	0.0272
i-Pentane	0.2450	0.0098	0.4243	0.0081	0.0284	0.0089
n-Pentane	0.3048	0.0122	0.5279	0.0101	0.0349	0.0110
n-Hexane	0.6338	0.0254	1.3108	0.0251	0.0824	0.0259
Nitrogen	0.1633	0.0065	0.1098	0.0021	0.0057	0.0018
CO2	0.7597	0.0304	0.8024	0.0154	0.0405	0.0127
H2S	0.0001	0.0000	0.0001	0.0000	0.0000	0.0000
H2O	0.0162	0.0006	0.0070	0.0001	0.0003	0.0001
NBP[1]95*	0.0915	0.0037	0.1492	0.0029	0.0091	0.0029
NBP[1]121*	0.1231	0.0049	0.2153	0.0041	0.0130	0.0041
NBP[1]147*	0.1798	0.0072	0.3460	0.0066	0.0206	0.0065
NBP[1]171*	0.3856	0.0154	0.8114	0.0155	0.0475	0.0149
NBP[1]195*	0.5613	0.0225	1.2606	0.0241	0.0729	0.0229
NBP[1]222*	0.4674	0.0187	1.1289	0.0216	0.0645	0.0203
NBP[1]248*	0.4276	0.0171	1.1106	0.0213	0.0627	0.0197
NBP[1]273*	0.3741	0.0150	1.0389	0.0199	0.0580	0.0182
NBP[1]299*	0.3138	0.0126	0.9293	0.0178	0.0513	0.0161
NBP[1]325*	0.2417	0.0097	0.7602	0.0146	0.0416	0.0131
NBP[1]351*	0.2063	0.0083	0.6900	0.0132	0.0374	0.0118

* Specified by user.

Material Stream: 5 (continued)

Fluid Package: Basis-1
Property Package: Peng-Robinson

COMPOSITION

Liquid Phase (continued)

Phase Fraction 6.374e-002

COMPONENTS	MOLAR FLOW (kgmole/h)	MOLE FRACTION	MASS FLOW (tonne/d)	MASS FRACTION	LIQUID VOLUME FLOW (m3/h)	LIQUID VOLUME FRACTION
NBP[1]377*	0.1971	0.0079	0.7030	0.0135	0.0377	0.0118
NBP[1]402*	0.1869	0.0075	0.7108	0.0136	0.0377	0.0119
NBP[1]428*	0.1825	0.0073	0.7405	0.0142	0.0389	0.0122
NBP[1]454*	0.1857	0.0074	0.8052	0.0154	0.0419	0.0132
NBP[1]480*	0.1910	0.0076	0.8849	0.0169	0.0456	0.0143
NBP[1]505*	0.1871	0.0075	0.9240	0.0177	0.0471	0.0148
NBP[1]531*	0.1819	0.0073	0.9566	0.0183	0.0484	0.0152
NBP[1]557*	0.1762	0.0071	0.9856	0.0189	0.0494	0.0155
NBP[1]582*	0.1692	0.0068	1.0048	0.0192	0.0499	0.0157
NBP[1]608*	0.1634	0.0065	1.0294	0.0197	0.0507	0.0160
NBP[1]634*	0.1605	0.0064	1.0714	0.0205	0.0524	0.0165
NBP[1]659*	0.1582	0.0063	1.1168	0.0214	0.0542	0.0170
NBP[1]685*	0.1639	0.0066	1.2209	0.0234	0.0587	0.0185
NBP[1]711*	0.1714	0.0069	1.3432	0.0257	0.0641	0.0202
NBP[1]736*	0.1696	0.0068	1.3907	0.0266	0.0659	0.0207
NBP[1]762*	0.1652	0.0066	1.4209	0.0272	0.0668	0.0210
NBP[1]788*	0.1584	0.0063	1.4420	0.0276	0.0674	0.0212
NBP[1]825*	0.2654	0.0106	2.5960	0.0497	0.1201	0.0378
NBP[1]873*	0.1830	0.0073	1.9403	0.0371	0.0887	0.0279
NBP[1]926*	0.1437	0.0058	1.6471	0.0315	0.0744	0.0234
NBP[1]978*	0.1474	0.0059	1.8524	0.0355	0.0825	0.0260
NBP[1]1021*	0.0728	0.0029	0.9655	0.0185	0.0426	0.0134
NBP[1]1075*	0.0449	0.0018	0.6310	0.0121	0.0276	0.0087
NBP[1]1123*	0.0417	0.0017	0.6267	0.0120	0.0271	0.0085
NBP[1]1173*	0.0300	0.0012	0.4772	0.0091	0.0205	0.0064
NBP[1]1250*	0.0393	0.0016	0.6767	0.0130	0.0287	0.0090
NBP[1]1339*	0.0364	0.0015	0.6999	0.0134	0.0291	0.0092
NBP[1]1432*	0.0257	0.0010	0.5397	0.0103	0.0221	0.0070
NBP[1]1528*	0.0180	0.0007	0.4082	0.0078	0.0165	0.0052
NBP[1]1637*	0.0105	0.0004	0.2521	0.0048	0.0101	0.0032
NBP[1]1732*	0.0000	0.0000	0.0000	0.0000	0.0000	0.0000
NBP[1]1819*	0.0000	0.0000	0.0000	0.0000	0.0000	0.0000
NBP[1]1913*	0.0000	0.0000	0.0000	0.0000	0.0000	0.0000
Total	24.9971	1.0000	52.2467	1.0000	3.1788	1.0000

Aqueous Phase

Phase Fraction 0.2719

COMPONENTS	MOLAR FLOW (kgmole/h)	MOLE FRACTION	MASS FLOW (tonne/d)	MASS FRACTION	LIQUID VOLUME FLOW (m3/h)	LIQUID VOLUME FRACTION
Methane	0.0001	0.0000	0.0000	0.0000	0.0000	0.0000
Ethane	0.0000	0.0000	0.0000	0.0000	0.0000	0.0000
Propane	0.0000	0.0000	0.0000	0.0000	0.0000	0.0000
i-Butane	0.0000	0.0000	0.0000	0.0000	0.0000	0.0000
n-Butane	0.0000	0.0000	0.0000	0.0000	0.0000	0.0000
i-Pentane	0.0000	0.0000	0.0000	0.0000	0.0000	0.0000
n-Pentane	0.0000	0.0000	0.0000	0.0000	0.0000	0.0000
n-Hexane	0.0000	0.0000	0.0000	0.0000	0.0000	0.0000
Nitrogen	0.0040	0.0000	0.0027	0.0001	0.0001	0.0001
CO2	0.0978	0.0009	0.1033	0.0022	0.0052	0.0027
H2S	0.0000	0.0000	0.0000	0.0000	0.0000	0.0000
H2O	106.5092	0.9990	46.0506	0.9977	1.9226	0.9972
NBP[1]95*	0.0000	0.0000	0.0000	0.0000	0.0000	0.0000
NBP[1]121*	0.0000	0.0000	0.0000	0.0000	0.0000	0.0000
NBP[1]147*	0.0000	0.0000	0.0000	0.0000	0.0000	0.0000
NBP[1]171*	0.0000	0.0000	0.0000	0.0000	0.0000	0.0000

* Specified by user.

Material Stream: 5 (continued)

Fluid Package: Basis-1
Property Package: Peng-Robinson

COMPOSITION

Aqueous Phase (continued)

Phase Fraction 0.2719

COMPONENTS	MOLAR FLOW (kgmole/h)	MOLE FRACTION	MASS FLOW (tonne/d)	MASS FRACTION	LIQUID VOLUME FLOW (m3/h)	LIQUID VOLUME FRACTION
NBP[1]195*	0.0000	0.0000	0.0000	0.0000	0.0000	0.0000
NBP[1]222*	0.0000	0.0000	0.0000	0.0000	0.0000	0.0000
NBP[1]248*	0.0000	0.0000	0.0000	0.0000	0.0000	0.0000
NBP[1]273*	0.0000	0.0000	0.0000	0.0000	0.0000	0.0000
NBP[1]299*	0.0000	0.0000	0.0000	0.0000	0.0000	0.0000
NBP[1]325*	0.0000	0.0000	0.0000	0.0000	0.0000	0.0000
NBP[1]351*	0.0000	0.0000	0.0000	0.0000	0.0000	0.0000
NBP[1]377*	0.0000	0.0000	0.0000	0.0000	0.0000	0.0000
NBP[1]402*	0.0000	0.0000	0.0000	0.0000	0.0000	0.0000
NBP[1]428*	0.0000	0.0000	0.0000	0.0000	0.0000	0.0000
NBP[1]454*	0.0000	0.0000	0.0000	0.0000	0.0000	0.0000
NBP[1]480*	0.0000	0.0000	0.0000	0.0000	0.0000	0.0000
NBP[1]505*	0.0000	0.0000	0.0000	0.0000	0.0000	0.0000
NBP[1]531*	0.0000	0.0000	0.0000	0.0000	0.0000	0.0000
NBP[1]557*	0.0000	0.0000	0.0000	0.0000	0.0000	0.0000
NBP[1]582*	0.0000	0.0000	0.0000	0.0000	0.0000	0.0000
NBP[1]608*	0.0000	0.0000	0.0000	0.0000	0.0000	0.0000
NBP[1]634*	0.0000	0.0000	0.0000	0.0000	0.0000	0.0000
NBP[1]659*	0.0000	0.0000	0.0000	0.0000	0.0000	0.0000
NBP[1]685*	0.0000	0.0000	0.0000	0.0000	0.0000	0.0000
NBP[1]711*	0.0000	0.0000	0.0000	0.0000	0.0000	0.0000
NBP[1]736*	0.0000	0.0000	0.0000	0.0000	0.0000	0.0000
NBP[1]762*	0.0000	0.0000	0.0000	0.0000	0.0000	0.0000
NBP[1]788*	0.0000	0.0000	0.0000	0.0000	0.0000	0.0000
NBP[1]825*	0.0000	0.0000	0.0000	0.0000	0.0000	0.0000
NBP[1]873*	0.0000	0.0000	0.0000	0.0000	0.0000	0.0000
NBP[1]926*	0.0000	0.0000	0.0000	0.0000	0.0000	0.0000
NBP[1]978*	0.0000	0.0000	0.0000	0.0000	0.0000	0.0000
NBP[1]1021*	0.0000	0.0000	0.0000	0.0000	0.0000	0.0000
NBP[1]1075*	0.0000	0.0000	0.0000	0.0000	0.0000	0.0000
NBP[1]1123*	0.0000	0.0000	0.0000	0.0000	0.0000	0.0000
NBP[1]1173*	0.0000	0.0000	0.0000	0.0000	0.0000	0.0000
NBP[1]1250*	0.0000	0.0000	0.0000	0.0000	0.0000	0.0000
NBP[1]1339*	0.0000	0.0000	0.0000	0.0000	0.0000	0.0000
NBP[1]1432*	0.0000	0.0000	0.0000	0.0000	0.0000	0.0000
NBP[1]1528*	0.0000	0.0000	0.0000	0.0000	0.0000	0.0000
NBP[1]1637*	0.0000	0.0000	0.0000	0.0000	0.0000	0.0000
NBP[1]1732*	0.0000	0.0000	0.0000	0.0000	0.0000	0.0000
NBP[1]1819*	0.0000	0.0000	0.0000	0.0000	0.0000	0.0000
NBP[1]1913*	0.0000	0.0000	0.0000	0.0000	0.0000	0.0000
Total	106.6110	1.0000	46.1566	1.0000	1.9280	1.0000

Material Stream: 6

Fluid Package: Basis-1
Property Package: Peng-Robinson

CONDITIONS

		Overall	Vapour Phase	Liquid Phase	Aqueous Phase
Vapour / Phase Fraction		0.6693	0.6693	0.0591	0.2716
Temperature:	(F)	105.0 *	105.0	105.0	105.0
Pressure:	(psig)	2090	2090	2090	2090
Molar Flow	(MMSCFD)	7.874	5.270	0.4654	2.138
Mass Flow	(tonne/d)	237.5	140.6	50.84	46.11
Std Ideal Liq Vol Flow	(barrel/day)	3142	2391	460.2	290.7
Molar Enthalpy	(kJ/kgmole)	-1.527e+005	-9.272e+004	-2.243e+005	-2.849e+005

Licensed to: PETROCHEMICAL ENGINEERIN
* Specified by user.

Material Stream: 6 (continued)

Fluid Package: Basis-1
Property Package: Peng-Robinson

CONDITIONS

	Overall	Vapour Phase	Liquid Phase	Aqueous Phase
Molar Entropy (kJ/kgmole-C)	122.8	141.7	208.3	57.54
Heat Flow (MMBtu/hr)	-56.75	-23.07	-4.928	-28.76
Liq Vol Flow @Std Cond (barrel/day)	2.954e+005 *	9.328e+005	441.5	285.7

PROPERTIES

	Overall	Vapour Phase	Liquid Phase	Aqueous Phase
Molecular Weight	25.24	22.32	91.38	18.04
Molar Density (kgmole/m3)	10.34	7.952	7.690	55.46
Mass Density (kg/m3)	260.9	177.5	702.7	1000
Act. Volume Flow (barrel/day)	5728	4983	455.0	289.9
Mass Enthalpy (kJ/kg)	-6049	-4154	-2455	-1.579e+004
Mass Entropy (kJ/kg-C)	4.864	6.347	2.279	3.190
Heat Capacity (kJ/kgmole-C)	81.84	73.70	194.3	77.43
Mass Heat Capacity (kJ/kg-C)	3.243	3.302	2.127	4.293
LHV Molar Basis (Std) (Btu/SCF)	---	---	---	9.889e-004
LHV Mass Basis (Std) (kJ/kg)	---	---	---	4.839e-002
Phase Fraction [Vol. Basis]	0.7610	0.7610	0.1464	9.251e-002
Phase Fraction [Mass Basis]	0.5919	0.5919	0.2140	0.1941
Partial Pressure of CO2 (psig)	54.66	---	---	---
Cost Based on Flow (Cost/s)	0.0000	0.0000	0.0000	0.0000
Act. Gas Flow (ACT_m3/h)	33.01	33.01	---	---
Avg. Liq. Density (kgmole/m3)	18.84	16.57	7.605	55.31
Specific Heat (kJ/kgmole-C)	81.84	73.70	194.3	77.43
Std. Gas Flow (STD_m3/h)	9272	6206	548.1	2518
Std. Ideal Liq. Mass Density (kg/m3)	475.5	369.8	694.9	997.6
Act. Liq. Flow (barrel/day)	744.9	---	455.0	289.9
Z Factor	---	0.6997	0.7235	0.1003
Watson K	15.58	16.97	12.21	8.472
User Property	---	---	---	---
Partial Pressure of H2S (psig)	-14.69	---	---	---
Cp/(Cp - R)	1.113	1.127	1.045	1.120
Cp/Cv	1.435	1.919	1.280	1.152
Heat of Vap. (kJ/kgmole)	6.038e+004	---	---	---
Kinematic Viscosity (cSt)	---	0.1151	2.090	0.6444
Liq. Mass Density (Std. Cond) (kg/m3)	5.058	0.9481	724.3	1015
Liq. Vol. Flow (Std. Cond) (barrel/day)	2.954e+005	9.328e+005	441.5	285.7
Liquid Fraction	0.3307	0.0000	1.000	1.000
Molar Volume (m3/kgmole)	9.675e-002	0.1258	0.1300	1.803e-002
Mass Heat of Vap. (kJ/kg)	2392	---	---	---
Phase Fraction [Molar Basis]	0.6693	0.6693	0.0591	0.2716
Surface Tension (dyne/cm)	---	---	9.330	69.34
Thermal Conductivity (W/m-K)	---	5.521e-002	8.535e-002	0.6322
Viscosity (cP)	---	2.043e-002	1.469	0.6446
Cv (Semi-Ideal) (kJ/kgmole-C)	73.53	65.38	186.0	69.12
Mass Cv (Semi-Ideal) (kJ/kg-C)	2.913	2.929	2.036	3.832
Cv (kJ/kgmole-C)	57.05	38.40	151.9	67.19
Mass Cv (kJ/kg-C)	2.260	1.720	1.662	3.725
Cv (Ent. Method) (kJ/kgmole-C)	---	37.84	---	66.40
Mass Cv (Ent. Method) (kJ/kg-C)	---	1.695	---	3.681
Cp/Cv (Ent. Method)	---	1.947	---	1.166
Reid VP at 37.8 C (psig)	3319	2401	369.1	---
True VP at 37.8 C (psig)	6318	2875	2053	380.5
Liq. Vol. Flow - Sum(Std. Cond) (barrel/day)	9.335e+005	9.328e+005	441.5	285.7
HHV Molar Basis (Std) (Btu/SCF)	---	---	---	46.43
HHV Mass Basis (Std) (kJ/kg)	---	---	---	2272
CO2 Loading	---	---	---	---
CO2 App ML Con (kgmole/m3)	---	---	0.2248	4.588e-002

* Specified by user.

Material Stream: 6 (continued)

Fluid Package: Basis-1
Property Package: Peng-Robinson

PROPERTIES

	Overall	Vapour Phase	Liquid Phase	Aqueous Phase
CO2 App WT Con (kgmol/kg)	---	---	3.200e-004	4.587e-005
Phase Fraction [Act. Vol. Basis]	0.8699	0.8699	7.945e-002	5.061e-002
Mass Exergy (kJ/kg)	318.7	---	---	---
Viscosity Index	-38.22	---	---	---
Ideal Gas Cp/Cv	1.212	1.234	1.058	1.328
Ideal Gas Cp (kJ/kgmole-C)	47.49	43.89	151.7	33.67
Mass Ideal Gas Cp (kJ/kg-C)	1.882	1.966	1.661	1.867
Bubble Point Pressure (psig)	6321	---	---	---

COMPOSITION

Overall Phase

Vapour Fraction 0.6693

COMPONENTS	MOLAR FLOW (kgmole/h)	MOLE FRACTION	MASS FLOW (tonne/d)	MASS FRACTION	LIQUID VOLUME FLOW (m3/h)	LIQUID VOLUME FRACTION
Methane	207.0440	0.5280	79.7181	0.3356	11.0944	0.5330
Ethane	28.8006	0.0734	20.7848	0.0875	2.4348	0.1170
Propane	15.2677	0.0389	16.1583	0.0680	1.3288	0.0638
i-Butane	2.0287	0.0052	2.8300	0.0119	0.2098	0.0101
n-Butane	3.9513	0.0101	5.5120	0.0232	0.3938	0.0189
i-Pentane	0.8495	0.0022	1.4710	0.0062	0.0983	0.0047
n-Pentane	0.9602	0.0024	1.6627	0.0070	0.1100	0.0053
n-Hexane	1.4698	0.0037	3.0399	0.0128	0.1911	0.0092
Nitrogen	5.5989	0.0143	3.7642	0.0158	0.1945	0.0093
CO2	9.4151	0.0240	9.9445	0.0419	0.5020	0.0241
H2S	0.0006	0.0000	0.0005	0.0000	0.0000	0.0000
H2O	106.6990	0.2721	46.1326	0.1942	1.9261	0.0925
NBP[1]95*	0.2883	0.0007	0.4699	0.0020	0.0288	0.0014
NBP[1]121*	0.3381	0.0009	0.5912	0.0025	0.0358	0.0017
NBP[1]147*	0.4314	0.0011	0.8304	0.0035	0.0494	0.0024
NBP[1]171*	0.8224	0.0021	1.7306	0.0073	0.1013	0.0049
NBP[1]195*	1.0758	0.0027	2.4160	0.0102	0.1398	0.0067
NBP[1]222*	0.8003	0.0020	1.9331	0.0081	0.1105	0.0053
NBP[1]248*	0.6657	0.0017	1.7287	0.0073	0.0976	0.0047
NBP[1]273*	0.5358	0.0014	1.4881	0.0063	0.0831	0.0040
NBP[1]299*	0.4185	0.0011	1.2393	0.0052	0.0684	0.0033
NBP[1]325*	0.3029	0.0008	0.9528	0.0040	0.0521	0.0025
NBP[1]351*	0.2456	0.0006	0.8214	0.0035	0.0445	0.0021
NBP[1]377*	0.2247	0.0006	0.8014	0.0034	0.0429	0.0021
NBP[1]402*	0.2061	0.0005	0.7838	0.0033	0.0416	0.0020
NBP[1]428*	0.1961	0.0005	0.7956	0.0033	0.0418	0.0020
NBP[1]454*	0.1956	0.0005	0.8480	0.0036	0.0441	0.0021
NBP[1]480*	0.1982	0.0005	0.9182	0.0039	0.0473	0.0023
NBP[1]505*	0.1920	0.0005	0.9484	0.0040	0.0484	0.0023
NBP[1]531*	0.1852	0.0005	0.9740	0.0041	0.0492	0.0024
NBP[1]557*	0.1784	0.0005	0.9978	0.0042	0.0500	0.0024
NBP[1]582*	0.1706	0.0004	1.0132	0.0043	0.0503	0.0024
NBP[1]608*	0.1643	0.0004	1.0351	0.0044	0.0510	0.0025
NBP[1]634*	0.1611	0.0004	1.0753	0.0045	0.0526	0.0025
NBP[1]659*	0.1586	0.0004	1.1194	0.0047	0.0543	0.0026
NBP[1]685*	0.1641	0.0004	1.2227	0.0051	0.0588	0.0028
NBP[1]711*	0.1715	0.0004	1.3445	0.0057	0.0642	0.0031
NBP[1]736*	0.1697	0.0004	1.3915	0.0059	0.0659	0.0032
NBP[1]762*	0.1653	0.0004	1.4214	0.0060	0.0669	0.0032
NBP[1]788*	0.1585	0.0004	1.4424	0.0061	0.0674	0.0032
NBP[1]825*	0.2655	0.0007	2.5963	0.0109	0.1201	0.0058
NBP[1]873*	0.1830	0.0005	1.9404	0.0082	0.0887	0.0043
NBP[1]926*	0.1437	0.0004	1.6472	0.0069	0.0744	0.0036

* Specified by user.

Material Stream: 6 (continued)

Fluid Package: Basis-1
Property Package: Peng-Robinson

COMPOSITION

Overall Phase (continued)

Vapour Fraction 0.6693

COMPONENTS	MOLAR FLOW (kgmole/h)	MOLE FRACTION	MASS FLOW (tonne/d)	MASS FRACTION	LIQUID VOLUME FLOW (m3/h)	LIQUID VOLUME FRACTION
NBP[1]978*	0.1474	0.0004	1.8524	0.0078	0.0825	0.0040
NBP[1]1021*	0.0728	0.0002	0.9655	0.0041	0.0426	0.0020
NBP[1]1075*	0.0449	0.0001	0.6310	0.0027	0.0276	0.0013
NBP[1]1123*	0.0417	0.0001	0.6267	0.0026	0.0271	0.0013
NBP[1]1173*	0.0300	0.0001	0.4772	0.0020	0.0205	0.0010
NBP[1]1250*	0.0393	0.0001	0.6767	0.0028	0.0287	0.0014
NBP[1]1339*	0.0364	0.0001	0.6999	0.0029	0.0291	0.0014
NBP[1]1432*	0.0257	0.0001	0.5397	0.0023	0.0221	0.0011
NBP[1]1528*	0.0180	0.0000	0.4082	0.0017	0.0165	0.0008
NBP[1]1637*	0.0127	0.0000	0.3047	0.0013	0.0122	0.0006
NBP[1]1732*	0.0101	0.0000	0.2565	0.0011	0.0101	0.0005
NBP[1]1819*	0.0097	0.0000	0.2590	0.0011	0.0101	0.0005
NBP[1]1913*	0.0112	0.0000	0.3148	0.0013	0.0121	0.0006
Total	392.1623	1.0000	237.5489	1.0000	20.8162	1.0000

Vapour Phase

Phase Fraction 0.6693

COMPONENTS	MOLAR FLOW (kgmole/h)	MOLE FRACTION	MASS FLOW (tonne/d)	MASS FRACTION	LIQUID VOLUME FLOW (m3/h)	LIQUID VOLUME FRACTION
Methane	198.5586	0.7565	76.4509	0.5437	10.6397	0.6716
Ethane	26.4727	0.1009	19.1048	0.1359	2.2380	0.1413
Propane	13.2904	0.0506	14.0656	0.1000	1.1567	0.0730
i-Butane	1.6672	0.0064	2.3257	0.0165	0.1724	0.0109
n-Butane	3.1512	0.0120	4.3958	0.0313	0.3140	0.0198
i-Pentane	0.6210	0.0024	1.0753	0.0076	0.0719	0.0045
n-Pentane	0.6756	0.0026	1.1699	0.0083	0.0774	0.0049
n-Hexane	0.8700	0.0033	1.7994	0.0128	0.1131	0.0071
Nitrogen	5.4494	0.0208	3.6637	0.0261	0.1893	0.0119
CO2	8.6492	0.0330	9.1356	0.0650	0.4612	0.0291
H2S	0.0005	0.0000	0.0004	0.0000	0.0000	0.0000
H2O	0.2615	0.0010	0.1131	0.0008	0.0047	0.0003
NBP[1]95*	0.2026	0.0008	0.3303	0.0023	0.0202	0.0013
NBP[1]121*	0.2224	0.0008	0.3889	0.0028	0.0235	0.0015
NBP[1]147*	0.2617	0.0010	0.5037	0.0036	0.0300	0.0019
NBP[1]171*	0.4563	0.0017	0.9601	0.0068	0.0562	0.0035
NBP[1]195*	0.5397	0.0021	1.2121	0.0086	0.0701	0.0044
NBP[1]222*	0.3510	0.0013	0.8477	0.0060	0.0484	0.0031
NBP[1]248*	0.2519	0.0010	0.6543	0.0047	0.0369	0.0023
NBP[1]273*	0.1719	0.0007	0.4773	0.0034	0.0266	0.0017
NBP[1]299*	0.1115	0.0004	0.3303	0.0023	0.0182	0.0012
NBP[1]325*	0.0654	0.0002	0.2057	0.0015	0.0112	0.0007
NBP[1]351*	0.0420	0.0002	0.1406	0.0010	0.0076	0.0005
NBP[1]377*	0.0296	0.0001	0.1054	0.0007	0.0056	0.0004
NBP[1]402*	0.0206	0.0001	0.0783	0.0006	0.0042	0.0003
NBP[1]428*	0.0145	0.0001	0.0590	0.0004	0.0031	0.0002
NBP[1]454*	0.0106	0.0000	0.0458	0.0003	0.0024	0.0002
NBP[1]480*	0.0077	0.0000	0.0356	0.0003	0.0018	0.0001
NBP[1]505*	0.0053	0.0000	0.0260	0.0002	0.0013	0.0001
NBP[1]531*	0.0035	0.0000	0.0185	0.0001	0.0009	0.0001
NBP[1]557*	0.0023	0.0000	0.0130	0.0001	0.0006	0.0000
NBP[1]582*	0.0015	0.0000	0.0089	0.0001	0.0004	0.0000
NBP[1]608*	0.0010	0.0000	0.0060	0.0000	0.0003	0.0000
NBP[1]634*	0.0006	0.0000	0.0041	0.0000	0.0002	0.0000
NBP[1]659*	0.0004	0.0000	0.0027	0.0000	0.0001	0.0000
NBP[1]685*	0.0003	0.0000	0.0019	0.0000	0.0001	0.0000

* Specified by user.

Material Stream: 6 (continued)

Fluid Package: Basis-1
Property Package: Peng-Robinson

COMPOSITION

Vapour Phase (continued)

Phase Fraction 0.6693

COMPONENTS	MOLAR FLOW (kgmole/h)	MOLE FRACTION	MASS FLOW (tonne/d)	MASS FRACTION	LIQUID VOLUME FLOW (m3/h)	LIQUID VOLUME FRACTION
NBP[1]711*	0.0002	0.0000	0.0013	0.0000	0.0001	0.0000
NBP[1]736*	0.0001	0.0000	0.0009	0.0000	0.0000	0.0000
NBP[1]762*	0.0001	0.0000	0.0005	0.0000	0.0000	0.0000
NBP[1]788*	0.0000	0.0000	0.0003	0.0000	0.0000	0.0000
NBP[1]825*	0.0000	0.0000	0.0003	0.0000	0.0000	0.0000
NBP[1]873*	0.0000	0.0000	0.0001	0.0000	0.0000	0.0000
NBP[1]926*	0.0000	0.0000	0.0000	0.0000	0.0000	0.0000
NBP[1]978*	0.0000	0.0000	0.0000	0.0000	0.0000	0.0000
NBP[1]1021*	0.0000	0.0000	0.0000	0.0000	0.0000	0.0000
NBP[1]1075*	0.0000	0.0000	0.0000	0.0000	0.0000	0.0000
NBP[1]1123*	0.0000	0.0000	0.0000	0.0000	0.0000	0.0000
NBP[1]1173*	0.0000	0.0000	0.0000	0.0000	0.0000	0.0000
NBP[1]1250*	0.0000	0.0000	0.0000	0.0000	0.0000	0.0000
NBP[1]1339*	0.0000	0.0000	0.0000	0.0000	0.0000	0.0000
NBP[1]1432*	0.0000	0.0000	0.0000	0.0000	0.0000	0.0000
NBP[1]1528*	0.0000	0.0000	0.0000	0.0000	0.0000	0.0000
NBP[1]1637*	0.0007	0.0000	0.0157	0.0001	0.0006	0.0000
NBP[1]1732*	0.0101	0.0000	0.2564	0.0018	0.0101	0.0006
NBP[1]1819*	0.0097	0.0000	0.2590	0.0018	0.0101	0.0006
NBP[1]1913*	0.0112	0.0000	0.3148	0.0022	0.0121	0.0008
Total	262.4735	1.0000	140.6055	1.0000	15.8421	1.0000

Liquid Phase

Phase Fraction 5.911e-002

COMPONENTS	MOLAR FLOW (kgmole/h)	MOLE FRACTION	MASS FLOW (tonne/d)	MASS FRACTION	LIQUID VOLUME FLOW (m3/h)	LIQUID VOLUME FRACTION
Methane	8.4853	0.3660	3.2671	0.0643	0.4547	0.1492
Ethane	2.3279	0.1004	1.6800	0.0330	0.1968	0.0646
Propane	1.9774	0.0853	2.0927	0.0412	0.1721	0.0565
i-Butane	0.3615	0.0156	0.5043	0.0099	0.0374	0.0123
n-Butane	0.8001	0.0345	1.1161	0.0220	0.0797	0.0262
i-Pentane	0.2285	0.0099	0.3957	0.0078	0.0264	0.0087
n-Pentane	0.2846	0.0123	0.4928	0.0097	0.0326	0.0107
n-Hexane	0.5998	0.0259	1.2406	0.0244	0.0780	0.0256
Nitrogen	0.1459	0.0063	0.0981	0.0019	0.0051	0.0017
CO2	0.6778	0.0292	0.7159	0.0141	0.0361	0.0119
H2S	0.0001	0.0000	0.0001	0.0000	0.0000	0.0000
H2O	0.0217	0.0009	0.0094	0.0002	0.0004	0.0001
NBP[1]95*	0.0856	0.0037	0.1396	0.0027	0.0086	0.0028
NBP[1]121*	0.1157	0.0050	0.2023	0.0040	0.0122	0.0040
NBP[1]147*	0.1698	0.0073	0.3267	0.0064	0.0194	0.0064
NBP[1]171*	0.3662	0.0158	0.7705	0.0152	0.0451	0.0148
NBP[1]195*	0.5360	0.0231	1.2038	0.0237	0.0697	0.0229
NBP[1]222*	0.4494	0.0194	1.0854	0.0214	0.0620	0.0204
NBP[1]248*	0.4137	0.0178	1.0745	0.0211	0.0607	0.0199
NBP[1]273*	0.3640	0.0157	1.0108	0.0199	0.0564	0.0185
NBP[1]299*	0.3070	0.0132	0.9090	0.0179	0.0502	0.0165
NBP[1]325*	0.2375	0.0102	0.7471	0.0147	0.0408	0.0134
NBP[1]351*	0.2036	0.0088	0.6809	0.0134	0.0369	0.0121
NBP[1]377*	0.1952	0.0084	0.6960	0.0137	0.0373	0.0122
NBP[1]402*	0.1855	0.0080	0.7056	0.0139	0.0374	0.0123
NBP[1]428*	0.1815	0.0078	0.7366	0.0145	0.0387	0.0127
NBP[1]454*	0.1850	0.0080	0.8022	0.0158	0.0417	0.0137
NBP[1]480*	0.1905	0.0082	0.8826	0.0174	0.0454	0.0149
NBP[1]505*	0.1867	0.0081	0.9224	0.0181	0.0470	0.0154

* Specified by user.

Material Stream: 6 (continued)

Fluid Package: Basis-1
Property Package: Peng-Robinson

COMPOSITION

Liquid Phase (continued)

Phase Fraction 5.911e-002

COMPONENTS	MOLAR FLOW (kgmole/h)	MOLE FRACTION	MASS FLOW (tonne/d)	MASS FRACTION	LIQUID VOLUME FLOW (m3/h)	LIQUID VOLUME FRACTION
NBP[1]531*	0.1817	0.0078	0.9555	0.0188	0.0483	0.0158
NBP[1]557*	0.1761	0.0076	0.9849	0.0194	0.0494	0.0162
NBP[1]582*	0.1691	0.0073	1.0043	0.0198	0.0499	0.0164
NBP[1]608*	0.1633	0.0070	1.0291	0.0202	0.0507	0.0166
NBP[1]634*	0.1605	0.0069	1.0712	0.0211	0.0524	0.0172
NBP[1]659*	0.1582	0.0068	1.1167	0.0220	0.0541	0.0178
NBP[1]685*	0.1639	0.0071	1.2208	0.0240	0.0587	0.0193
NBP[1]711*	0.1714	0.0074	1.3432	0.0264	0.0641	0.0210
NBP[1]736*	0.1696	0.0073	1.3907	0.0274	0.0659	0.0216
NBP[1]762*	0.1652	0.0071	1.4209	0.0279	0.0668	0.0219
NBP[1]788*	0.1584	0.0068	1.4420	0.0284	0.0674	0.0221
NBP[1]825*	0.2654	0.0114	2.5960	0.0511	0.1201	0.0394
NBP[1]873*	0.1830	0.0079	1.9403	0.0382	0.0887	0.0291
NBP[1]926*	0.1437	0.0062	1.6471	0.0324	0.0744	0.0244
NBP[1]978*	0.1474	0.0064	1.8524	0.0364	0.0825	0.0271
NBP[1]1021*	0.0728	0.0031	0.9655	0.0190	0.0426	0.0140
NBP[1]1075*	0.0449	0.0019	0.6310	0.0124	0.0276	0.0091
NBP[1]1123*	0.0417	0.0018	0.6267	0.0123	0.0271	0.0089
NBP[1]1173*	0.0300	0.0013	0.4772	0.0094	0.0205	0.0067
NBP[1]1250*	0.0393	0.0017	0.6767	0.0133	0.0287	0.0094
NBP[1]1339*	0.0364	0.0016	0.6999	0.0138	0.0291	0.0096
NBP[1]1432*	0.0257	0.0011	0.5397	0.0106	0.0221	0.0073
NBP[1]1528*	0.0180	0.0008	0.4082	0.0080	0.0165	0.0054
NBP[1]1637*	0.0120	0.0005	0.2890	0.0057	0.0116	0.0038
NBP[1]1732*	0.0000	0.0000	0.0001	0.0000	0.0000	0.0000
NBP[1]1819*	0.0000	0.0000	0.0000	0.0000	0.0000	0.0000
NBP[1]1913*	0.0000	0.0000	0.0000	0.0000	0.0000	0.0000
Total	23.1813	1.0000	50.8377	1.0000	3.0483	1.0000

Aqueous Phase

Phase Fraction 0.2716

COMPONENTS	MOLAR FLOW (kgmole/h)	MOLE FRACTION	MASS FLOW (tonne/d)	MASS FRACTION	LIQUID VOLUME FLOW (m3/h)	LIQUID VOLUME FRACTION
Methane	0.0001	0.0000	0.0000	0.0000	0.0000	0.0000
Ethane	0.0000	0.0000	0.0000	0.0000	0.0000	0.0000
Propane	0.0000	0.0000	0.0000	0.0000	0.0000	0.0000
i-Butane	0.0000	0.0000	0.0000	0.0000	0.0000	0.0000
n-Butane	0.0000	0.0000	0.0000	0.0000	0.0000	0.0000
i-Pentane	0.0000	0.0000	0.0000	0.0000	0.0000	0.0000
n-Pentane	0.0000	0.0000	0.0000	0.0000	0.0000	0.0000
n-Hexane	0.0000	0.0000	0.0000	0.0000	0.0000	0.0000
Nitrogen	0.0035	0.0000	0.0024	0.0001	0.0001	0.0001
CO2	0.0881	0.0008	0.0931	0.0020	0.0047	0.0024
H2S	0.0000	0.0000	0.0000	0.0000	0.0000	0.0000
H2O	106.4157	0.9991	46.0102	0.9979	1.9210	0.9975
NBP[1]95*	0.0000	0.0000	0.0000	0.0000	0.0000	0.0000
NBP[1]121*	0.0000	0.0000	0.0000	0.0000	0.0000	0.0000
NBP[1]147*	0.0000	0.0000	0.0000	0.0000	0.0000	0.0000
NBP[1]171*	0.0000	0.0000	0.0000	0.0000	0.0000	0.0000
NBP[1]195*	0.0000	0.0000	0.0000	0.0000	0.0000	0.0000
NBP[1]222*	0.0000	0.0000	0.0000	0.0000	0.0000	0.0000
NBP[1]248*	0.0000	0.0000	0.0000	0.0000	0.0000	0.0000
NBP[1]273*	0.0000	0.0000	0.0000	0.0000	0.0000	0.0000
NBP[1]299*	0.0000	0.0000	0.0000	0.0000	0.0000	0.0000
NBP[1]325*	0.0000	0.0000	0.0000	0.0000	0.0000	0.0000

* Specified by user.

Material Stream: 6 (continued)

Fluid Package: Basis-1
Property Package: Peng-Robinson

COMPOSITION

Aqueous Phase (continued)

Phase Fraction 0.2716

COMPONENTS	MOLAR FLOW (kgmole/h)	MOLE FRACTION	MASS FLOW (tonne/d)	MASS FRACTION	LIQUID VOLUME FLOW (m3/h)	LIQUID VOLUME FRACTION
NBP[1]351*	0.0000	0.0000	0.0000	0.0000	0.0000	0.0000
NBP[1]377*	0.0000	0.0000	0.0000	0.0000	0.0000	0.0000
NBP[1]402*	0.0000	0.0000	0.0000	0.0000	0.0000	0.0000
NBP[1]428*	0.0000	0.0000	0.0000	0.0000	0.0000	0.0000
NBP[1]454*	0.0000	0.0000	0.0000	0.0000	0.0000	0.0000
NBP[1]480*	0.0000	0.0000	0.0000	0.0000	0.0000	0.0000
NBP[1]505*	0.0000	0.0000	0.0000	0.0000	0.0000	0.0000
NBP[1]531*	0.0000	0.0000	0.0000	0.0000	0.0000	0.0000
NBP[1]557*	0.0000	0.0000	0.0000	0.0000	0.0000	0.0000
NBP[1]582*	0.0000	0.0000	0.0000	0.0000	0.0000	0.0000
NBP[1]608*	0.0000	0.0000	0.0000	0.0000	0.0000	0.0000
NBP[1]634*	0.0000	0.0000	0.0000	0.0000	0.0000	0.0000
NBP[1]659*	0.0000	0.0000	0.0000	0.0000	0.0000	0.0000
NBP[1]685*	0.0000	0.0000	0.0000	0.0000	0.0000	0.0000
NBP[1]711*	0.0000	0.0000	0.0000	0.0000	0.0000	0.0000
NBP[1]736*	0.0000	0.0000	0.0000	0.0000	0.0000	0.0000
NBP[1]762*	0.0000	0.0000	0.0000	0.0000	0.0000	0.0000
NBP[1]788*	0.0000	0.0000	0.0000	0.0000	0.0000	0.0000
NBP[1]825*	0.0000	0.0000	0.0000	0.0000	0.0000	0.0000
NBP[1]873*	0.0000	0.0000	0.0000	0.0000	0.0000	0.0000
NBP[1]926*	0.0000	0.0000	0.0000	0.0000	0.0000	0.0000
NBP[1]978*	0.0000	0.0000	0.0000	0.0000	0.0000	0.0000
NBP[1]1021*	0.0000	0.0000	0.0000	0.0000	0.0000	0.0000
NBP[1]1075*	0.0000	0.0000	0.0000	0.0000	0.0000	0.0000
NBP[1]1123*	0.0000	0.0000	0.0000	0.0000	0.0000	0.0000
NBP[1]1173*	0.0000	0.0000	0.0000	0.0000	0.0000	0.0000
NBP[1]1250*	0.0000	0.0000	0.0000	0.0000	0.0000	0.0000
NBP[1]1339*	0.0000	0.0000	0.0000	0.0000	0.0000	0.0000
NBP[1]1432*	0.0000	0.0000	0.0000	0.0000	0.0000	0.0000
NBP[1]1528*	0.0000	0.0000	0.0000	0.0000	0.0000	0.0000
NBP[1]1637*	0.0000	0.0000	0.0000	0.0000	0.0000	0.0000
NBP[1]1732*	0.0000	0.0000	0.0000	0.0000	0.0000	0.0000
NBP[1]1819*	0.0000	0.0000	0.0000	0.0000	0.0000	0.0000
NBP[1]1913*	0.0000	0.0000	0.0000	0.0000	0.0000	0.0000
Total	106.5074	1.0000	46.1056	1.0000	1.9258	1.0000

Material Stream: 7

Fluid Package: Basis-1
Property Package: Peng-Robinson

CONDITIONS

		Overall	Vapour Phase	Liquid Phase	Aqueous Phase
Vapour / Phase Fraction		0.6587	0.6587	0.0696	0.2718
Temperature:	(F)	83.74	83.74	83.74	83.74
Pressure:	(psig)	1142 *	1142	1142	1142
Molar Flow	(MMSCFD)	7.874	5.186	0.5477	2.140
Mass Flow	(tonne/d)	237.5	131.6	59.84	46.13
Std Ideal Liq Vol Flow	(barrel/day)	3142	2308	543.9	290.9
Molar Enthalpy	(kJ/kgmole)	-1.527e+005	-9.022e+004	-2.237e+005	-2.859e+005
Molar Entropy	(kJ/kgmole-C)	125.5	148.2	186.9	54.65
Heat Flow	(MMBtu/hr)	-56.75	-22.09	-5.784	-28.88
Liq Vol Flow @Std Cond	(barrel/day)	2.954e+005 *	9.183e+005	520.8	285.8

* Specified by user.

Material Stream: 7 (continued)

Fluid Package: Basis-1
Property Package: Peng-Robinson

PROPERTIES

	Overall	Vapour Phase	Liquid Phase	Aqueous Phase
Molecular Weight	25.24	21.23	91.39	18.04
Molar Density (kgmole/m3)	5.810	4.162	7.749	55.85
Mass Density (kg/m3)	146.6	88.34	708.1	1007
Act. Volume Flow (barrel/day)	1.019e+004	9369	531.5	288.1
Mass Enthalpy (kJ/kg)	-6049	-4250	-2448	-1.585e+004
Mass Entropy (kJ/kg-C)	4.971	6.983	2.045	3.030
Heat Capacity (kJ/kgmole-C)	73.60	59.58	191.0	77.55
Mass Heat Capacity (kJ/kg-C)	2.916	2.807	2.090	4.300
LHV Molar Basis (Std) (Btu/SCF)	---	---	---	3.663e-004
LHV Mass Basis (Std) (kJ/kg)	---	---	---	1.793e-002
Phase Fraction [Vol. Basis]	0.7343	0.7343	0.1731	9.256e-002
Phase Fraction [Mass Basis]	0.5539	0.5539	0.2519	0.1942
Partial Pressure of CO2 (psig)	23.99	---	---	---
Cost Based on Flow (Cost/s)	0.0000	0.0000	0.0000	0.0000
Act. Gas Flow (ACT_m3/h)	62.06	62.06	---	---
Avg. Liq. Density (kgmole/m3)	18.84	16.90	7.571	55.31
Specific Heat (kJ/kgmole-C)	73.60	59.58	191.0	77.55
Std. Gas Flow (STD_m3/h)	9272	6107	645.1	2520
Std. Ideal Liq. Mass Density (kg/m3)	475.5	358.7	691.9	997.6
Act. Liq. Flow (barrel/day)	819.6	---	531.5	288.1
Z Factor	---	0.7631	0.4099	5.687e-002
Watson K	15.58	17.30	12.30	8.487
User Property	---	---	---	---
Partial Pressure of H2S (psig)	-14.69	---	---	---
Cp/(Cp - R)	1.127	1.162	1.046	1.120
Cp/Cv	1.299	1.718	1.295	1.148
Heat of Vap. (kJ/kgmole)	4.656e+004	---	---	---
Kinematic Viscosity (cSt)	---	0.1610	2.310	0.8134
Liq. Mass Density (Std. Cond) (kg/m3)	5.058	0.9012	722.6	1015
Liq. Vol. Flow (Std. Cond) (barrel/day)	2.954e+005	9.183e+005	520.8	285.8
Liquid Fraction	0.3413	0.0000	1.000	1.000
Molar Volume (m3/kgmole)	0.1721	0.2403	0.1291	1.791e-002
Mass Heat of Vap. (kJ/kg)	1845	---	---	---
Phase Fraction [Molar Basis]	0.6587	0.6587	0.0696	0.2718
Surface Tension (dyne/cm)	---	---	11.07	71.40
Thermal Conductivity (W/m-K)	---	3.962e-002	9.033e-002	0.6165
Viscosity (cP)	---	1.422e-002	1.636	0.8192
Cv (Semi-Ideal) (kJ/kgmole-C)	65.29	51.27	182.6	69.23
Mass Cv (Semi-Ideal) (kJ/kg-C)	2.587	2.415	1.999	3.839
Cv (kJ/kgmole-C)	56.67	34.69	147.4	67.53
Mass Cv (kJ/kg-C)	2.245	1.634	1.613	3.744
Cv (Ent. Method) (kJ/kgmole-C)	---	---	155.6	66.42
Mass Cv (Ent. Method) (kJ/kg-C)	---	---	1.703	3.683
Cp/Cv (Ent. Method)	---	---	1.227	1.167
Reid VP at 37.8 C (psig)	3319	---	273.7	---
True VP at 37.8 C (psig)	6318	---	1221	71.73
Liq. Vol. Flow - Sum(Std. Cond) (barrel/day)	9.191e+005	9.183e+005	520.8	285.8
HHV Molar Basis (Std) (Btu/SCF)	---	---	---	46.43
HHV Mass Basis (Std) (kJ/kg)	---	---	---	2272
CO2 Loading	---	---	---	---
CO2 App ML Con (kgmole/m3)	---	---	0.1962	4.262e-002
CO2 App WT Con (kgmol/kg)	---	---	2.771e-004	4.232e-005
Phase Fraction [Act. Vol. Basis]	0.9196	0.9196	5.217e-002	2.828e-002
Mass Exergy (kJ/kg)	286.6	---	---	---
Viscosity Index	-25.54	---	---	---
Ideal Gas Cp/Cv	1.217	1.251	1.060	1.329
Ideal Gas Cp (kJ/kgmole-C)	46.67	41.49	146.8	33.60

* Specified by user.

Material Stream: 7 (continued)

Fluid Package: Basis-1
Property Package: Peng-Robinson

PROPERTIES

	Overall	Vapour Phase	Liquid Phase	Aqueous Phase
Mass Ideal Gas Cp (kJ/kg-C)	1.849	1.955	1.606	1.863
Bubble Point Pressure (psig)	6295	---	---	---

COMPOSITION

Overall Phase

Vapour Fraction 0.6587

COMPONENTS	MOLAR FLOW (kgmole/h)	MOLE FRACTION	MASS FLOW (tonne/d)	MASS FRACTION	LIQUID VOLUME FLOW (m3/h)	LIQUID VOLUME FRACTION
Methane	207.0440	0.5280	79.7181	0.3356	11.0944	0.5330
Ethane	28.8006	0.0734	20.7848	0.0875	2.4348	0.1170
Propane	15.2677	0.0389	16.1583	0.0680	1.3288	0.0638
i-Butane	2.0287	0.0052	2.8300	0.0119	0.2098	0.0101
n-Butane	3.9513	0.0101	5.5120	0.0232	0.3938	0.0189
i-Pentane	0.8495	0.0022	1.4710	0.0062	0.0983	0.0047
n-Pentane	0.9602	0.0024	1.6627	0.0070	0.1100	0.0053
n-Hexane	1.4698	0.0037	3.0399	0.0128	0.1911	0.0092
Nitrogen	5.5989	0.0143	3.7642	0.0158	0.1945	0.0093
CO2	9.4151	0.0240	9.9445	0.0419	0.5020	0.0241
H2S	0.0006	0.0000	0.0005	0.0000	0.0000	0.0000
H2O	106.6990	0.2721	46.1326	0.1942	1.9261	0.0925
NBP[1]95*	0.2883	0.0007	0.4699	0.0020	0.0288	0.0014
NBP[1]121*	0.3381	0.0009	0.5912	0.0025	0.0358	0.0017
NBP[1]147*	0.4314	0.0011	0.8304	0.0035	0.0494	0.0024
NBP[1]171*	0.8224	0.0021	1.7306	0.0073	0.1013	0.0049
NBP[1]195*	1.0758	0.0027	2.4160	0.0102	0.1398	0.0067
NBP[1]222*	0.8003	0.0020	1.9331	0.0081	0.1105	0.0053
NBP[1]248*	0.6657	0.0017	1.7287	0.0073	0.0976	0.0047
NBP[1]273*	0.5358	0.0014	1.4881	0.0063	0.0831	0.0040
NBP[1]299*	0.4185	0.0011	1.2393	0.0052	0.0684	0.0033
NBP[1]325*	0.3029	0.0008	0.9528	0.0040	0.0521	0.0025
NBP[1]351*	0.2456	0.0006	0.8214	0.0035	0.0445	0.0021
NBP[1]377*	0.2247	0.0006	0.8014	0.0034	0.0429	0.0021
NBP[1]402*	0.2061	0.0005	0.7838	0.0033	0.0416	0.0020
NBP[1]428*	0.1961	0.0005	0.7956	0.0033	0.0418	0.0020
NBP[1]454*	0.1956	0.0005	0.8480	0.0036	0.0441	0.0021
NBP[1]480*	0.1982	0.0005	0.9182	0.0039	0.0473	0.0023
NBP[1]505*	0.1920	0.0005	0.9484	0.0040	0.0484	0.0023
NBP[1]531*	0.1852	0.0005	0.9740	0.0041	0.0492	0.0024
NBP[1]557*	0.1784	0.0005	0.9978	0.0042	0.0500	0.0024
NBP[1]582*	0.1706	0.0004	1.0132	0.0043	0.0503	0.0024
NBP[1]608*	0.1643	0.0004	1.0351	0.0044	0.0510	0.0025
NBP[1]634*	0.1611	0.0004	1.0753	0.0045	0.0526	0.0025
NBP[1]659*	0.1586	0.0004	1.1194	0.0047	0.0543	0.0026
NBP[1]685*	0.1641	0.0004	1.2227	0.0051	0.0588	0.0028
NBP[1]711*	0.1715	0.0004	1.3445	0.0057	0.0642	0.0031
NBP[1]736*	0.1697	0.0004	1.3915	0.0059	0.0659	0.0032
NBP[1]762*	0.1653	0.0004	1.4214	0.0060	0.0669	0.0032
NBP[1]788*	0.1585	0.0004	1.4424	0.0061	0.0674	0.0032
NBP[1]825*	0.2655	0.0007	2.5963	0.0109	0.1201	0.0058
NBP[1]873*	0.1830	0.0005	1.9404	0.0082	0.0887	0.0043
NBP[1]926*	0.1437	0.0004	1.6472	0.0069	0.0744	0.0036
NBP[1]978*	0.1474	0.0004	1.8524	0.0078	0.0825	0.0040
NBP[1]1021*	0.0728	0.0002	0.9655	0.0041	0.0426	0.0020
NBP[1]1075*	0.0449	0.0001	0.6310	0.0027	0.0276	0.0013
NBP[1]1123*	0.0417	0.0001	0.6267	0.0026	0.0271	0.0013
NBP[1]1173*	0.0300	0.0001	0.4772	0.0020	0.0205	0.0010
NBP[1]1250*	0.0393	0.0001	0.6767	0.0028	0.0287	0.0014

* Specified by user.

Material Stream: 7 (continued)

Fluid Package: Basis-1
Property Package: Peng-Robinson

COMPOSITION

Overall Phase (continued)

Vapour Fraction 0.6587

COMPONENTS	MOLAR FLOW (kgmole/h)	MOLE FRACTION	MASS FLOW (tonne/d)	MASS FRACTION	LIQUID VOLUME FLOW (m3/h)	LIQUID VOLUME FRACTION
NBP[1]1339*	0.0364	0.0001	0.6999	0.0029	0.0291	0.0014
NBP[1]1432*	0.0257	0.0001	0.5397	0.0023	0.0221	0.0011
NBP[1]1528*	0.0180	0.0000	0.4082	0.0017	0.0165	0.0008
NBP[1]1637*	0.0127	0.0000	0.3047	0.0013	0.0122	0.0006
NBP[1]1732*	0.0101	0.0000	0.2565	0.0011	0.0101	0.0005
NBP[1]1819*	0.0097	0.0000	0.2590	0.0011	0.0101	0.0005
NBP[1]1913*	0.0112	0.0000	0.3148	0.0013	0.0121	0.0006
Total	392.1623	1.0000	237.5489	1.0000	20.8162	1.0000

Vapour Phase

Phase Fraction 0.6587

COMPONENTS	MOLAR FLOW (kgmole/h)	MOLE FRACTION	MASS FLOW (tonne/d)	MASS FRACTION	LIQUID VOLUME FLOW (m3/h)	LIQUID VOLUME FRACTION
Methane	199.9149	0.7740	76.9732	0.5850	10.7124	0.7008
Ethane	25.9268	0.1004	18.7108	0.1422	2.1919	0.1434
Propane	12.1437	0.0470	12.8521	0.0977	1.0569	0.0691
i-Butane	1.3760	0.0053	1.9195	0.0146	0.1423	0.0093
n-Butane	2.4696	0.0096	3.4451	0.0262	0.2461	0.0161
i-Pentane	0.4045	0.0016	0.7005	0.0053	0.0468	0.0031
n-Pentane	0.4094	0.0016	0.7090	0.0054	0.0469	0.0031
n-Hexane	0.3725	0.0014	0.7705	0.0059	0.0484	0.0032
Nitrogen	5.5015	0.0213	3.6987	0.0281	0.1911	0.0125
CO2	8.6429	0.0335	9.1290	0.0694	0.4609	0.0301
H2S	0.0005	0.0000	0.0004	0.0000	0.0000	0.0000
H2O	0.1864	0.0007	0.0806	0.0006	0.0034	0.0002
NBP[1]95*	0.1243	0.0005	0.2026	0.0015	0.0124	0.0008
NBP[1]121*	0.1193	0.0005	0.2086	0.0016	0.0126	0.0008
NBP[1]147*	0.1201	0.0005	0.2311	0.0018	0.0137	0.0009
NBP[1]171*	0.1782	0.0007	0.3750	0.0029	0.0220	0.0014
NBP[1]195*	0.1775	0.0007	0.3987	0.0030	0.0231	0.0015
NBP[1]222*	0.0932	0.0004	0.2250	0.0017	0.0129	0.0008
NBP[1]248*	0.0542	0.0002	0.1408	0.0011	0.0080	0.0005
NBP[1]273*	0.0299	0.0001	0.0831	0.0006	0.0046	0.0003
NBP[1]299*	0.0157	0.0001	0.0465	0.0004	0.0026	0.0002
NBP[1]325*	0.0074	0.0000	0.0233	0.0002	0.0013	0.0001
NBP[1]351*	0.0038	0.0000	0.0128	0.0001	0.0007	0.0000
NBP[1]377*	0.0022	0.0000	0.0077	0.0001	0.0004	0.0000
NBP[1]402*	0.0012	0.0000	0.0046	0.0000	0.0002	0.0000
NBP[1]428*	0.0007	0.0000	0.0028	0.0000	0.0001	0.0000
NBP[1]454*	0.0004	0.0000	0.0018	0.0000	0.0001	0.0000
NBP[1]480*	0.0002	0.0000	0.0011	0.0000	0.0001	0.0000
NBP[1]505*	0.0001	0.0000	0.0006	0.0000	0.0000	0.0000
NBP[1]531*	0.0001	0.0000	0.0004	0.0000	0.0000	0.0000
NBP[1]557*	0.0000	0.0000	0.0002	0.0000	0.0000	0.0000
NBP[1]582*	0.0000	0.0000	0.0001	0.0000	0.0000	0.0000
NBP[1]608*	0.0000	0.0000	0.0001	0.0000	0.0000	0.0000
NBP[1]634*	0.0000	0.0000	0.0000	0.0000	0.0000	0.0000
NBP[1]659*	0.0000	0.0000	0.0000	0.0000	0.0000	0.0000
NBP[1]685*	0.0000	0.0000	0.0000	0.0000	0.0000	0.0000
NBP[1]711*	0.0000	0.0000	0.0000	0.0000	0.0000	0.0000
NBP[1]736*	0.0000	0.0000	0.0000	0.0000	0.0000	0.0000
NBP[1]762*	0.0000	0.0000	0.0000	0.0000	0.0000	0.0000
NBP[1]788*	0.0000	0.0000	0.0000	0.0000	0.0000	0.0000
NBP[1]825*	0.0000	0.0000	0.0000	0.0000	0.0000	0.0000
NBP[1]873*	0.0000	0.0000	0.0000	0.0000	0.0000	0.0000

* Specified by user.

Material Stream: 7 (continued)

Fluid Package: Basis-1
Property Package: Peng-Robinson

COMPOSITION

Vapour Phase (continued)

Phase Fraction 0.6587

COMPONENTS	MOLAR FLOW (kgmole/h)	MOLE FRACTION	MASS FLOW (tonne/d)	MASS FRACTION	LIQUID VOLUME FLOW (m3/h)	LIQUID VOLUME FRACTION
NBP[1]926*	0.0000	0.0000	0.0000	0.0000	0.0000	0.0000
NBP[1]978*	0.0000	0.0000	0.0000	0.0000	0.0000	0.0000
NBP[1]1021*	0.0000	0.0000	0.0000	0.0000	0.0000	0.0000
NBP[1]1075*	0.0000	0.0000	0.0000	0.0000	0.0000	0.0000
NBP[1]1123*	0.0000	0.0000	0.0000	0.0000	0.0000	0.0000
NBP[1]1173*	0.0000	0.0000	0.0000	0.0000	0.0000	0.0000
NBP[1]1250*	0.0000	0.0000	0.0000	0.0000	0.0000	0.0000
NBP[1]1339*	0.0000	0.0000	0.0000	0.0000	0.0000	0.0000
NBP[1]1432*	0.0000	0.0000	0.0000	0.0000	0.0000	0.0000
NBP[1]1528*	0.0000	0.0000	0.0000	0.0000	0.0000	0.0000
NBP[1]1637*	0.0000	0.0000	0.0000	0.0000	0.0000	0.0000
NBP[1]1732*	0.0019	0.0000	0.0489	0.0004	0.0019	0.0001
NBP[1]1819*	0.0097	0.0000	0.2590	0.0020	0.0101	0.0007
NBP[1]1913*	0.0112	0.0000	0.3148	0.0024	0.0121	0.0008
Total	258.3003	1.0000	131.5786	1.0000	15.2861	1.0000

Liquid Phase

Phase Fraction 6.957e-002

COMPONENTS	MOLAR FLOW (kgmole/h)	MOLE FRACTION	MASS FLOW (tonne/d)	MASS FRACTION	LIQUID VOLUME FLOW (m3/h)	LIQUID VOLUME FRACTION
Methane	7.1291	0.2613	2.7449	0.0459	0.3820	0.1060
Ethane	2.8738	0.1053	2.0740	0.0347	0.2430	0.0674
Propane	3.1240	0.1145	3.3062	0.0553	0.2719	0.0755
i-Butane	0.6527	0.0239	0.9105	0.0152	0.0675	0.0187
n-Butane	1.4817	0.0543	2.0669	0.0345	0.1477	0.0410
i-Pentane	0.4450	0.0163	0.7705	0.0129	0.0515	0.0143
n-Pentane	0.5508	0.0202	0.9538	0.0159	0.0631	0.0175
n-Hexane	1.0973	0.0402	2.2695	0.0379	0.1427	0.0396
Nitrogen	0.0952	0.0035	0.0640	0.0011	0.0033	0.0009
CO2	0.6908	0.0253	0.7296	0.0122	0.0368	0.0102
H2S	0.0001	0.0000	0.0001	0.0000	0.0000	0.0000
H2O	0.0158	0.0006	0.0068	0.0001	0.0003	0.0001
NBP[1]95*	0.1640	0.0060	0.2673	0.0045	0.0164	0.0045
NBP[1]121*	0.2188	0.0080	0.3826	0.0064	0.0231	0.0064
NBP[1]147*	0.3114	0.0114	0.5993	0.0100	0.0356	0.0099
NBP[1]171*	0.6442	0.0236	1.3556	0.0227	0.0793	0.0220
NBP[1]195*	0.8983	0.0329	2.0173	0.0337	0.1167	0.0324
NBP[1]222*	0.7072	0.0259	1.7081	0.0285	0.0976	0.0271
NBP[1]248*	0.6114	0.0224	1.5879	0.0265	0.0897	0.0249
NBP[1]273*	0.5059	0.0185	1.4050	0.0235	0.0784	0.0218
NBP[1]299*	0.4028	0.0148	1.1928	0.0199	0.0659	0.0183
NBP[1]325*	0.2955	0.0108	0.9295	0.0155	0.0508	0.0141
NBP[1]351*	0.2418	0.0089	0.8086	0.0135	0.0438	0.0121
NBP[1]377*	0.2226	0.0082	0.7937	0.0133	0.0425	0.0118
NBP[1]402*	0.2049	0.0075	0.7792	0.0130	0.0413	0.0115
NBP[1]428*	0.1954	0.0072	0.7928	0.0132	0.0416	0.0116
NBP[1]454*	0.1952	0.0072	0.8463	0.0141	0.0440	0.0122
NBP[1]480*	0.1979	0.0073	0.9171	0.0153	0.0472	0.0131
NBP[1]505*	0.1919	0.0070	0.9477	0.0158	0.0483	0.0134
NBP[1]531*	0.1852	0.0068	0.9736	0.0163	0.0492	0.0137
NBP[1]557*	0.1784	0.0065	0.9976	0.0167	0.0500	0.0139
NBP[1]582*	0.1706	0.0063	1.0131	0.0169	0.0503	0.0140
NBP[1]608*	0.1643	0.0060	1.0350	0.0173	0.0510	0.0142
NBP[1]634*	0.1611	0.0059	1.0753	0.0180	0.0526	0.0146
NBP[1]659*	0.1586	0.0058	1.1194	0.0187	0.0543	0.0151

* Specified by user.

Material Stream: 7 (continued)

Fluid Package: Basis-1
Property Package: Peng-Robinson

COMPOSITION

Liquid Phase (continued)

Phase Fraction 6.957e-002

COMPONENTS	MOLAR FLOW (kgmole/h)	MOLE FRACTION	MASS FLOW (tonne/d)	MASS FRACTION	LIQUID VOLUME FLOW (m3/h)	LIQUID VOLUME FRACTION
NBP[1]685*	0.1641	0.0060	1.2227	0.0204	0.0588	0.0163
NBP[1]711*	0.1715	0.0063	1.3445	0.0225	0.0642	0.0178
NBP[1]736*	0.1697	0.0062	1.3915	0.0233	0.0659	0.0183
NBP[1]762*	0.1653	0.0061	1.4214	0.0238	0.0669	0.0186
NBP[1]788*	0.1585	0.0058	1.4424	0.0241	0.0674	0.0187
NBP[1]825*	0.2655	0.0097	2.5963	0.0434	0.1201	0.0333
NBP[1]873*	0.1830	0.0067	1.9404	0.0324	0.0887	0.0246
NBP[1]926*	0.1437	0.0053	1.6472	0.0275	0.0744	0.0207
NBP[1]978*	0.1474	0.0054	1.8524	0.0310	0.0825	0.0229
NBP[1]1021*	0.0728	0.0027	0.9655	0.0161	0.0426	0.0118
NBP[1]1075*	0.0449	0.0016	0.6310	0.0105	0.0276	0.0077
NBP[1]1123*	0.0417	0.0015	0.6267	0.0105	0.0271	0.0075
NBP[1]1173*	0.0300	0.0011	0.4772	0.0080	0.0205	0.0057
NBP[1]1250*	0.0393	0.0014	0.6767	0.0113	0.0287	0.0080
NBP[1]1339*	0.0364	0.0013	0.6999	0.0117	0.0291	0.0081
NBP[1]1432*	0.0257	0.0009	0.5397	0.0090	0.0221	0.0061
NBP[1]1528*	0.0180	0.0007	0.4082	0.0068	0.0165	0.0046
NBP[1]1637*	0.0127	0.0005	0.3047	0.0051	0.0122	0.0034
NBP[1]1732*	0.0082	0.0003	0.2076	0.0035	0.0082	0.0023
NBP[1]1819*	0.0000	0.0000	0.0000	0.0000	0.0000	0.0000
NBP[1]1913*	0.0000	0.0000	0.0000	0.0000	0.0000	0.0000
Total	27.2817	1.0000	59.8377	1.0000	3.6033	1.0000

Aqueous Phase

Phase Fraction 0.2718

COMPONENTS	MOLAR FLOW (kgmole/h)	MOLE FRACTION	MASS FLOW (tonne/d)	MASS FRACTION	LIQUID VOLUME FLOW (m3/h)	LIQUID VOLUME FRACTION
Methane	0.0000	0.0000	0.0000	0.0000	0.0000	0.0000
Ethane	0.0000	0.0000	0.0000	0.0000	0.0000	0.0000
Propane	0.0000	0.0000	0.0000	0.0000	0.0000	0.0000
i-Butane	0.0000	0.0000	0.0000	0.0000	0.0000	0.0000
n-Butane	0.0000	0.0000	0.0000	0.0000	0.0000	0.0000
i-Pentane	0.0000	0.0000	0.0000	0.0000	0.0000	0.0000
n-Pentane	0.0000	0.0000	0.0000	0.0000	0.0000	0.0000
n-Hexane	0.0000	0.0000	0.0000	0.0000	0.0000	0.0000
Nitrogen	0.0022	0.0000	0.0015	0.0000	0.0001	0.0000
CO2	0.0813	0.0008	0.0859	0.0019	0.0043	0.0023
H2S	0.0000	0.0000	0.0000	0.0000	0.0000	0.0000
H2O	106.4967	0.9992	46.0452	0.9981	1.9224	0.9977
NBP[1]95*	0.0000	0.0000	0.0000	0.0000	0.0000	0.0000
NBP[1]121*	0.0000	0.0000	0.0000	0.0000	0.0000	0.0000
NBP[1]147*	0.0000	0.0000	0.0000	0.0000	0.0000	0.0000
NBP[1]171*	0.0000	0.0000	0.0000	0.0000	0.0000	0.0000
NBP[1]195*	0.0000	0.0000	0.0000	0.0000	0.0000	0.0000
NBP[1]222*	0.0000	0.0000	0.0000	0.0000	0.0000	0.0000
NBP[1]248*	0.0000	0.0000	0.0000	0.0000	0.0000	0.0000
NBP[1]273*	0.0000	0.0000	0.0000	0.0000	0.0000	0.0000
NBP[1]299*	0.0000	0.0000	0.0000	0.0000	0.0000	0.0000
NBP[1]325*	0.0000	0.0000	0.0000	0.0000	0.0000	0.0000
NBP[1]351*	0.0000	0.0000	0.0000	0.0000	0.0000	0.0000
NBP[1]377*	0.0000	0.0000	0.0000	0.0000	0.0000	0.0000
NBP[1]402*	0.0000	0.0000	0.0000	0.0000	0.0000	0.0000
NBP[1]428*	0.0000	0.0000	0.0000	0.0000	0.0000	0.0000
NBP[1]454*	0.0000	0.0000	0.0000	0.0000	0.0000	0.0000
NBP[1]480*	0.0000	0.0000	0.0000	0.0000	0.0000	0.0000

* Specified by user.

Material Stream: 7 (continued)

Fluid Package: Basis-1
Property Package: Peng-Robinson

COMPOSITION

Aqueous Phase (continued)

Phase Fraction 0.2718

COMPONENTS	MOLAR FLOW (kgmole/h)	MOLE FRACTION	MASS FLOW (tonne/d)	MASS FRACTION	LIQUID VOLUME FLOW (m3/h)	LIQUID VOLUME FRACTION
NBP[1]505*	0.0000	0.0000	0.0000	0.0000	0.0000	0.0000
NBP[1]531*	0.0000	0.0000	0.0000	0.0000	0.0000	0.0000
NBP[1]557*	0.0000	0.0000	0.0000	0.0000	0.0000	0.0000
NBP[1]582*	0.0000	0.0000	0.0000	0.0000	0.0000	0.0000
NBP[1]608*	0.0000	0.0000	0.0000	0.0000	0.0000	0.0000
NBP[1]634*	0.0000	0.0000	0.0000	0.0000	0.0000	0.0000
NBP[1]659*	0.0000	0.0000	0.0000	0.0000	0.0000	0.0000
NBP[1]685*	0.0000	0.0000	0.0000	0.0000	0.0000	0.0000
NBP[1]711*	0.0000	0.0000	0.0000	0.0000	0.0000	0.0000
NBP[1]736*	0.0000	0.0000	0.0000	0.0000	0.0000	0.0000
NBP[1]762*	0.0000	0.0000	0.0000	0.0000	0.0000	0.0000
NBP[1]788*	0.0000	0.0000	0.0000	0.0000	0.0000	0.0000
NBP[1]825*	0.0000	0.0000	0.0000	0.0000	0.0000	0.0000
NBP[1]873*	0.0000	0.0000	0.0000	0.0000	0.0000	0.0000
NBP[1]926*	0.0000	0.0000	0.0000	0.0000	0.0000	0.0000
NBP[1]978*	0.0000	0.0000	0.0000	0.0000	0.0000	0.0000
NBP[1]1021*	0.0000	0.0000	0.0000	0.0000	0.0000	0.0000
NBP[1]1075*	0.0000	0.0000	0.0000	0.0000	0.0000	0.0000
NBP[1]1123*	0.0000	0.0000	0.0000	0.0000	0.0000	0.0000
NBP[1]1173*	0.0000	0.0000	0.0000	0.0000	0.0000	0.0000
NBP[1]1250*	0.0000	0.0000	0.0000	0.0000	0.0000	0.0000
NBP[1]1339*	0.0000	0.0000	0.0000	0.0000	0.0000	0.0000
NBP[1]1432*	0.0000	0.0000	0.0000	0.0000	0.0000	0.0000
NBP[1]1528*	0.0000	0.0000	0.0000	0.0000	0.0000	0.0000
NBP[1]1637*	0.0000	0.0000	0.0000	0.0000	0.0000	0.0000
NBP[1]1732*	0.0000	0.0000	0.0000	0.0000	0.0000	0.0000
NBP[1]1819*	0.0000	0.0000	0.0000	0.0000	0.0000	0.0000
NBP[1]1913*	0.0000	0.0000	0.0000	0.0000	0.0000	0.0000
Total	106.5803	1.0000	46.1326	1.0000	1.9268	1.0000

Material Stream: 8

Fluid Package: Basis-1
Property Package: Peng-Robinson

CONDITIONS

		Overall	Vapour Phase	Liquid Phase	Aqueous Phase
Vapour / Phase Fraction		0.7094	0.7094	0.0278	0.2627
Temperature:	(F)	180.0 *	180.0	180.0	180.0
Pressure:	(psig)	650.0	650.0	650.0	650.0
Molar Flow	(MMSCFD)	7.874	5.586	0.2189	2.069
Mass Flow	(tonne/d)	237.5	149.8	43.22	44.57
Std Ideal Liq Vol Flow	(barrel/day)	3142	2523	338.8	280.9
Molar Enthalpy	(kJ/kgmole)	-1.477e+005	-9.014e+004	-3.487e+005	-2.817e+005
Molar Entropy	(kJ/kgmole-C)	143.6	163.9	344.2	67.34
Heat Flow	(MMBtu/hr)	-54.89	-23.77	-3.604	-27.51
Liq Vol Flow @Std Cond	(barrel/day)	2.954e+005 *	9.887e+005	330.0	276.2

PROPERTIES

		Overall	Vapour Phase	Liquid Phase	Aqueous Phase
Molecular Weight		25.24	22.43	165.2	18.02
Molar Density	(kgmole/m3)	2.348	1.709	4.632	53.52
Mass Density	(kg/m3)	59.26	38.34	765.1	964.5
Act. Volume Flow	(barrel/day)	2.521e+004	2.457e+004	355.3	290.6
Mass Enthalpy	(kJ/kg)	-5851	-4019	-2112	-1.563e+004
Mass Entropy	(kJ/kg-C)	5.689	7.310	2.084	3.737

* Specified by user.

Material Stream: 8 (continued)

Fluid Package: Basis-1
Property Package: Peng-Robinson

PROPERTIES

	Overall	Vapour Phase	Liquid Phase	Aqueous Phase
Heat Capacity (kJ/kgmole-C)	67.89	52.46	362.2	78.40
Mass Heat Capacity (kJ/kg-C)	2.690	2.339	2.193	4.350
LHV Molar Basis (Std) (Btu/SCF)	---	---	---	2.900e-003
LHV Mass Basis (Std) (kJ/kg)	---	---	---	0.1420
Phase Fraction [Vol. Basis]	0.8028	0.8028	0.1078	8.940e-002
Phase Fraction [Mass Basis]	0.6304	0.6304	0.1819	0.1876
Partial Pressure of CO2 (psig)	7.444	---	---	---
Cost Based on Flow (Cost/s)	0.0000	0.0000	0.0000	0.0000
Act. Gas Flow (ACT_m3/h)	162.8	162.8	---	---
Avg. Liq. Density (kgmole/m3)	18.84	16.65	4.859	55.37
Specific Heat (kJ/kgmole-C)	67.89	52.46	362.2	78.40
Std. Gas Flow (STD_m3/h)	9272	6578	257.8	2436
Std. Ideal Liq. Mass Density (kg/m3)	475.5	373.4	802.5	997.8
Act. Liq. Flow (barrel/day)	645.9	---	355.3	290.6
Z Factor	---	0.9073	0.3348	2.898e-002
Watson K	15.58	16.94	11.83	8.532
User Property	---	---	---	---
Partial Pressure of H2S (psig)	-14.69	---	---	---
Cp/(Cp - R)	1.140	1.188	1.023	1.119
Cp/Cv	1.164	1.338	1.188	1.169
Heat of Vap. (kJ/kgmole)	6.759e+004	---	---	---
Kinematic Viscosity (cSt)	---	0.3673	1.258	0.3540
Liq. Mass Density (Std. Cond) (kg/m3)	5.058	0.9528	823.8	1015
Liq. Vol. Flow (Std. Cond) (barrel/day)	2.954e+005	9.887e+005	330.0	276.2
Liquid Fraction	0.2906	0.0000	1.000	1.000
Molar Volume (m3/kgmole)	0.4259	0.5850	0.2159	1.869e-002
Mass Heat of Vap. (kJ/kg)	2678	---	---	---
Phase Fraction [Molar Basis]	0.7094	0.7094	0.0278	0.2627
Surface Tension (dyne/cm)	---	---	15.03	61.91
Thermal Conductivity (W/m-K)	---	4.034e-002	9.779e-002	0.6712
Viscosity (cP)	---	1.408e-002	0.9626	0.3414
Cv (Semi-Ideal) (kJ/kgmole-C)	59.58	44.15	353.9	70.09
Mass Cv (Semi-Ideal) (kJ/kg-C)	2.361	1.968	2.143	3.889
Cv (kJ/kgmole-C)	58.35	39.21	305.0	67.09
Mass Cv (kJ/kg-C)	2.312	1.748	1.847	3.722
Cv (Ent. Method) (kJ/kgmole-C)	---	-4562	---	65.10
Mass Cv (Ent. Method) (kJ/kg-C)	---	-203.4	---	3.612
Cp/Cv (Ent. Method)	---	-1.150e-002	---	1.204
Reid VP at 37.8 C (psig)	3319	---	70.13	---
True VP at 37.8 C (psig)	6318	5068	501.1	8362
Liq. Vol. Flow - Sum(Std. Cond) (barrel/day)	9.893e+005	9.887e+005	330.0	276.2
HHV Molar Basis (Std) (Btu/SCF)	---	---	---	46.45
HHV Mass Basis (Std) (kJ/kg)	---	---	---	2275
CO2 Loading	---	---	---	---
CO2 App ML Con (kgmole/m3)	---	---	5.169e-002	1.364e-002
CO2 App WT Con (kgmol/kg)	---	---	6.756e-005	1.414e-005
Phase Fraction [Act. Vol. Basis]	0.9744	0.9744	1.409e-002	1.153e-002
Mass Exergy (kJ/kg)	271.3	---	---	---
Viscosity Index	-40.87	---	---	---
Ideal Gas Cp/Cv	1.197	1.216	1.029	1.324
Ideal Gas Cp (kJ/kgmole-C)	50.47	46.86	298.8	33.95
Mass Ideal Gas Cp (kJ/kg-C)	2.000	2.089	1.809	1.884
Bubble Point Pressure (psig)	6579	---	---	---

* Specified by user.

Material Stream: 8 (continued)

Fluid Package: Basis-1
Property Package: Peng-Robinson

COMPOSITION

Overall Phase

Vapour Fraction 0.7094

COMPONENTS	MOLAR FLOW (kgmole/h)	MOLE FRACTION	MASS FLOW (tonne/d)	MASS FRACTION	LIQUID VOLUME FLOW (m3/h)	LIQUID VOLUME FRACTION
Methane	207.0440	0.5280	79.7181	0.3356	11.0944	0.5330
Ethane	28.8006	0.0734	20.7848	0.0875	2.4348	0.1170
Propane	15.2677	0.0389	16.1583	0.0680	1.3288	0.0638
i-Butane	2.0287	0.0052	2.8300	0.0119	0.2098	0.0101
n-Butane	3.9513	0.0101	5.5120	0.0232	0.3938	0.0189
i-Pentane	0.8495	0.0022	1.4710	0.0062	0.0983	0.0047
n-Pentane	0.9602	0.0024	1.6627	0.0070	0.1100	0.0053
n-Hexane	1.4698	0.0037	3.0399	0.0128	0.1911	0.0092
Nitrogen	5.5989	0.0143	3.7642	0.0158	0.1945	0.0093
CO2	9.4151	0.0240	9.9445	0.0419	0.5020	0.0241
H2S	0.0006	0.0000	0.0005	0.0000	0.0000	0.0000
H2O	106.6990	0.2721	46.1326	0.1942	1.9261	0.0925
NBP[1]95*	0.2883	0.0007	0.4699	0.0020	0.0288	0.0014
NBP[1]121*	0.3381	0.0009	0.5912	0.0025	0.0358	0.0017
NBP[1]147*	0.4314	0.0011	0.8304	0.0035	0.0494	0.0024
NBP[1]171*	0.8224	0.0021	1.7306	0.0073	0.1013	0.0049
NBP[1]195*	1.0758	0.0027	2.4160	0.0102	0.1398	0.0067
NBP[1]222*	0.8003	0.0020	1.9331	0.0081	0.1105	0.0053
NBP[1]248*	0.6657	0.0017	1.7287	0.0073	0.0976	0.0047
NBP[1]273*	0.5358	0.0014	1.4881	0.0063	0.0831	0.0040
NBP[1]299*	0.4185	0.0011	1.2393	0.0052	0.0684	0.0033
NBP[1]325*	0.3029	0.0008	0.9528	0.0040	0.0521	0.0025
NBP[1]351*	0.2456	0.0006	0.8214	0.0035	0.0445	0.0021
NBP[1]377*	0.2247	0.0006	0.8014	0.0034	0.0429	0.0021
NBP[1]402*	0.2061	0.0005	0.7838	0.0033	0.0416	0.0020
NBP[1]428*	0.1961	0.0005	0.7956	0.0033	0.0418	0.0020
NBP[1]454*	0.1956	0.0005	0.8480	0.0036	0.0441	0.0021
NBP[1]480*	0.1982	0.0005	0.9182	0.0039	0.0473	0.0023
NBP[1]505*	0.1920	0.0005	0.9484	0.0040	0.0484	0.0023
NBP[1]531*	0.1852	0.0005	0.9740	0.0041	0.0492	0.0024
NBP[1]557*	0.1784	0.0005	0.9978	0.0042	0.0500	0.0024
NBP[1]582*	0.1706	0.0004	1.0132	0.0043	0.0503	0.0024
NBP[1]608*	0.1643	0.0004	1.0351	0.0044	0.0510	0.0025
NBP[1]634*	0.1611	0.0004	1.0753	0.0045	0.0526	0.0025
NBP[1]659*	0.1586	0.0004	1.1194	0.0047	0.0543	0.0026
NBP[1]685*	0.1641	0.0004	1.2227	0.0051	0.0588	0.0028
NBP[1]711*	0.1715	0.0004	1.3445	0.0057	0.0642	0.0031
NBP[1]736*	0.1697	0.0004	1.3915	0.0059	0.0659	0.0032
NBP[1]762*	0.1653	0.0004	1.4214	0.0060	0.0669	0.0032
NBP[1]788*	0.1585	0.0004	1.4424	0.0061	0.0674	0.0032
NBP[1]825*	0.2655	0.0007	2.5963	0.0109	0.1201	0.0058
NBP[1]873*	0.1830	0.0005	1.9404	0.0082	0.0887	0.0043
NBP[1]926*	0.1437	0.0004	1.6472	0.0069	0.0744	0.0036
NBP[1]978*	0.1474	0.0004	1.8524	0.0078	0.0825	0.0040
NBP[1]1021*	0.0728	0.0002	0.9655	0.0041	0.0426	0.0020
NBP[1]1075*	0.0449	0.0001	0.6310	0.0027	0.0276	0.0013
NBP[1]1123*	0.0417	0.0001	0.6267	0.0026	0.0271	0.0013
NBP[1]1173*	0.0300	0.0001	0.4772	0.0020	0.0205	0.0010
NBP[1]1250*	0.0393	0.0001	0.6767	0.0028	0.0287	0.0014
NBP[1]1339*	0.0364	0.0001	0.6999	0.0029	0.0291	0.0014
NBP[1]1432*	0.0257	0.0001	0.5397	0.0023	0.0221	0.0011
NBP[1]1528*	0.0180	0.0000	0.4082	0.0017	0.0165	0.0008
NBP[1]1637*	0.0127	0.0000	0.3047	0.0013	0.0122	0.0006
NBP[1]1732*	0.0101	0.0000	0.2565	0.0011	0.0101	0.0005

* Specified by user.

Material Stream: 8 (continued)

Fluid Package: Basis-1
Property Package: Peng-Robinson

COMPOSITION

Overall Phase (continued)

Vapour Fraction 0.7094

COMPONENTS	MOLAR FLOW (kgmole/h)	MOLE FRACTION	MASS FLOW (tonne/d)	MASS FRACTION	LIQUID VOLUME FLOW (m3/h)	LIQUID VOLUME FRACTION
NBP[1]1819*	0.0097	0.0000	0.2590	0.0011	0.0101	0.0005
NBP[1]1913*	0.0112	0.0000	0.3148	0.0013	0.0121	0.0006
Total	392.1623	1.0000	237.5489	1.0000	20.8162	1.0000

Vapour Phase

Phase Fraction 0.7094

COMPONENTS	MOLAR FLOW (kgmole/h)	MOLE FRACTION	MASS FLOW (tonne/d)	MASS FRACTION	LIQUID VOLUME FLOW (m3/h)	LIQUID VOLUME FRACTION
Methane	205.7121	0.7394	79.2052	0.5289	11.0230	0.6596
Ethane	28.2788	0.1016	20.4082	0.1363	2.3907	0.1431
Propane	14.6648	0.0527	15.5201	0.1036	1.2763	0.0764
i-Butane	1.8865	0.0068	2.6316	0.0176	0.1951	0.0117
n-Butane	3.6170	0.0130	5.0456	0.0337	0.3605	0.0216
i-Pentane	0.7259	0.0026	1.2571	0.0084	0.0840	0.0050
n-Pentane	0.7997	0.0029	1.3848	0.0092	0.0916	0.0055
n-Hexane	1.0285	0.0037	2.1272	0.0142	0.1338	0.0080
Nitrogen	5.5792	0.0201	3.7510	0.0250	0.1938	0.0116
CO2	9.2671	0.0333	9.7883	0.0654	0.4942	0.0296
H2S	0.0006	0.0000	0.0005	0.0000	0.0000	0.0000
H2O	3.6355	0.0131	1.5719	0.0105	0.0656	0.0039
NBP[1]95*	0.2398	0.0009	0.3909	0.0026	0.0240	0.0014
NBP[1]121*	0.2656	0.0010	0.4644	0.0031	0.0281	0.0017
NBP[1]147*	0.3136	0.0011	0.6036	0.0040	0.0359	0.0021
NBP[1]171*	0.5432	0.0020	1.1430	0.0076	0.0669	0.0040
NBP[1]195*	0.6293	0.0023	1.4132	0.0094	0.0818	0.0049
NBP[1]222*	0.3900	0.0014	0.9421	0.0063	0.0538	0.0032
NBP[1]248*	0.2616	0.0009	0.6794	0.0045	0.0384	0.0023
NBP[1]273*	0.1629	0.0006	0.4525	0.0030	0.0253	0.0015
NBP[1]299*	0.0944	0.0003	0.2795	0.0019	0.0154	0.0009
NBP[1]325*	0.0481	0.0002	0.1514	0.0010	0.0083	0.0005
NBP[1]351*	0.0264	0.0001	0.0884	0.0006	0.0048	0.0003
NBP[1]377*	0.0157	0.0001	0.0559	0.0004	0.0030	0.0002
NBP[1]402*	0.0091	0.0000	0.0347	0.0002	0.0018	0.0001
NBP[1]428*	0.0053	0.0000	0.0216	0.0001	0.0011	0.0001
NBP[1]454*	0.0032	0.0000	0.0139	0.0001	0.0007	0.0000
NBP[1]480*	0.0019	0.0000	0.0088	0.0001	0.0005	0.0000
NBP[1]505*	0.0011	0.0000	0.0052	0.0000	0.0003	0.0000
NBP[1]531*	0.0006	0.0000	0.0030	0.0000	0.0002	0.0000
NBP[1]557*	0.0003	0.0000	0.0017	0.0000	0.0001	0.0000
NBP[1]582*	0.0002	0.0000	0.0009	0.0000	0.0000	0.0000
NBP[1]608*	0.0001	0.0000	0.0005	0.0000	0.0000	0.0000
NBP[1]634*	0.0000	0.0000	0.0003	0.0000	0.0000	0.0000
NBP[1]659*	0.0000	0.0000	0.0001	0.0000	0.0000	0.0000
NBP[1]685*	0.0000	0.0000	0.0001	0.0000	0.0000	0.0000
NBP[1]711*	0.0000	0.0000	0.0000	0.0000	0.0000	0.0000
NBP[1]736*	0.0000	0.0000	0.0000	0.0000	0.0000	0.0000
NBP[1]762*	0.0000	0.0000	0.0000	0.0000	0.0000	0.0000
NBP[1]788*	0.0000	0.0000	0.0000	0.0000	0.0000	0.0000
NBP[1]825*	0.0000	0.0000	0.0000	0.0000	0.0000	0.0000
NBP[1]873*	0.0000	0.0000	0.0000	0.0000	0.0000	0.0000
NBP[1]926*	0.0000	0.0000	0.0000	0.0000	0.0000	0.0000
NBP[1]978*	0.0000	0.0000	0.0000	0.0000	0.0000	0.0000
NBP[1]1021*	0.0000	0.0000	0.0000	0.0000	0.0000	0.0000
NBP[1]1075*	0.0000	0.0000	0.0000	0.0000	0.0000	0.0000
NBP[1]1123*	0.0000	0.0000	0.0000	0.0000	0.0000	0.0000

* Specified by user.

Material Stream: 8 (continued)

Fluid Package: Basis-1
Property Package: Peng-Robinson

COMPOSITION

Vapour Phase (continued)

Phase Fraction 0.7094

COMPONENTS	MOLAR FLOW (kgmole/h)	MOLE FRACTION	MASS FLOW (tonne/d)	MASS FRACTION	LIQUID VOLUME FLOW (m3/h)	LIQUID VOLUME FRACTION
NBP[1]1173*	0.0000	0.0000	0.0000	0.0000	0.0000	0.0000
NBP[1]1250*	0.0000	0.0000	0.0000	0.0000	0.0000	0.0000
NBP[1]1339*	0.0000	0.0000	0.0000	0.0000	0.0000	0.0000
NBP[1]1432*	0.0000	0.0000	0.0000	0.0000	0.0000	0.0000
NBP[1]1528*	0.0000	0.0000	0.0000	0.0000	0.0000	0.0000
NBP[1]1637*	0.0000	0.0000	0.0000	0.0000	0.0000	0.0000
NBP[1]1732*	0.0000	0.0000	0.0000	0.0000	0.0000	0.0000
NBP[1]1819*	0.0000	0.0000	0.0001	0.0000	0.0000	0.0000
NBP[1]1913*	0.0112	0.0000	0.3147	0.0021	0.0121	0.0007
Total	278.2194	1.0000	149.7616	1.0000	16.7111	1.0000

Liquid Phase

Phase Fraction 2.780e-002

COMPONENTS	MOLAR FLOW (kgmole/h)	MOLE FRACTION	MASS FLOW (tonne/d)	MASS FRACTION	LIQUID VOLUME FLOW (m3/h)	LIQUID VOLUME FRACTION
Methane	1.3316	0.1221	0.5127	0.0119	0.0714	0.0318
Ethane	0.5218	0.0479	0.3766	0.0087	0.0441	0.0197
Propane	0.6030	0.0553	0.6381	0.0148	0.0525	0.0234
i-Butane	0.1422	0.0130	0.1984	0.0046	0.0147	0.0066
n-Butane	0.3343	0.0307	0.4663	0.0108	0.0333	0.0148
i-Pentane	0.1235	0.0113	0.2139	0.0049	0.0143	0.0064
n-Pentane	0.1605	0.0147	0.2780	0.0064	0.0184	0.0082
n-Hexane	0.4413	0.0405	0.9127	0.0211	0.0574	0.0256
Nitrogen	0.0188	0.0017	0.0127	0.0003	0.0007	0.0003
CO2	0.1217	0.0112	0.1285	0.0030	0.0065	0.0029
H2S	0.0000	0.0000	0.0000	0.0000	0.0000	0.0000
H2O	0.0513	0.0047	0.0222	0.0005	0.0009	0.0004
NBP[1]95*	0.0485	0.0044	0.0790	0.0018	0.0048	0.0022
NBP[1]121*	0.0725	0.0066	0.1267	0.0029	0.0077	0.0034
NBP[1]147*	0.1179	0.0108	0.2269	0.0052	0.0135	0.0060
NBP[1]171*	0.2792	0.0256	0.5875	0.0136	0.0344	0.0153
NBP[1]195*	0.4465	0.0410	1.0027	0.0232	0.0580	0.0259
NBP[1]222*	0.4103	0.0376	0.9910	0.0229	0.0566	0.0252
NBP[1]248*	0.4040	0.0371	1.0493	0.0243	0.0593	0.0264
NBP[1]273*	0.3729	0.0342	1.0356	0.0240	0.0578	0.0258
NBP[1]299*	0.3241	0.0297	0.9597	0.0222	0.0530	0.0236
NBP[1]325*	0.2547	0.0234	0.8013	0.0185	0.0438	0.0195
NBP[1]351*	0.2192	0.0201	0.7330	0.0170	0.0397	0.0177
NBP[1]377*	0.2091	0.0192	0.7455	0.0172	0.0399	0.0178
NBP[1]402*	0.1970	0.0181	0.7491	0.0173	0.0397	0.0177
NBP[1]428*	0.1907	0.0175	0.7739	0.0179	0.0406	0.0181
NBP[1]454*	0.1924	0.0176	0.8341	0.0193	0.0434	0.0193
NBP[1]480*	0.1963	0.0180	0.9094	0.0210	0.0468	0.0209
NBP[1]505*	0.1909	0.0175	0.9431	0.0218	0.0481	0.0214
NBP[1]531*	0.1847	0.0169	0.9710	0.0225	0.0491	0.0219
NBP[1]557*	0.1781	0.0163	0.9961	0.0230	0.0499	0.0222
NBP[1]582*	0.1704	0.0156	1.0123	0.0234	0.0503	0.0224
NBP[1]608*	0.1642	0.0151	1.0346	0.0239	0.0510	0.0227
NBP[1]634*	0.1611	0.0148	1.0751	0.0249	0.0525	0.0234
NBP[1]659*	0.1586	0.0145	1.1193	0.0259	0.0543	0.0242
NBP[1]685*	0.1641	0.0151	1.2227	0.0283	0.0588	0.0262
NBP[1]711*	0.1715	0.0157	1.3444	0.0311	0.0642	0.0286
NBP[1]736*	0.1697	0.0156	1.3915	0.0322	0.0659	0.0294
NBP[1]762*	0.1653	0.0152	1.4214	0.0329	0.0669	0.0298
NBP[1]788*	0.1585	0.0145	1.4424	0.0334	0.0674	0.0300

* Specified by user.

Material Stream: 8 (continued)

Fluid Package: Basis-1
Property Package: Peng-Robinson

COMPOSITION

Liquid Phase (continued)

Phase Fraction 2.780e-002

COMPONENTS	MOLAR FLOW (kgmole/h)	MOLE FRACTION	MASS FLOW (tonne/d)	MASS FRACTION	LIQUID VOLUME FLOW (m3/h)	LIQUID VOLUME FRACTION
NBP[1]825*	0.2655	0.0243	2.5963	0.0601	0.1201	0.0535
NBP[1]873*	0.1830	0.0168	1.9404	0.0449	0.0887	0.0395
NBP[1]926*	0.1437	0.0132	1.6472	0.0381	0.0744	0.0332
NBP[1]978*	0.1474	0.0135	1.8524	0.0429	0.0825	0.0368
NBP[1]1021*	0.0728	0.0067	0.9655	0.0223	0.0426	0.0190
NBP[1]1075*	0.0449	0.0041	0.6310	0.0146	0.0276	0.0123
NBP[1]1123*	0.0417	0.0038	0.6267	0.0145	0.0271	0.0121
NBP[1]1173*	0.0300	0.0028	0.4772	0.0110	0.0205	0.0091
NBP[1]1250*	0.0393	0.0036	0.6767	0.0157	0.0287	0.0128
NBP[1]1339*	0.0364	0.0033	0.6999	0.0162	0.0291	0.0130
NBP[1]1432*	0.0257	0.0024	0.5397	0.0125	0.0221	0.0099
NBP[1]1528*	0.0180	0.0017	0.4082	0.0094	0.0165	0.0074
NBP[1]1637*	0.0127	0.0012	0.3047	0.0070	0.0122	0.0054
NBP[1]1732*	0.0101	0.0009	0.2565	0.0059	0.0101	0.0045
NBP[1]1819*	0.0097	0.0009	0.2589	0.0060	0.0101	0.0045
NBP[1]1913*	0.0000	0.0000	0.0001	0.0000	0.0000	0.0000
Total	10.9033	1.0000	43.2203	1.0000	2.2442	1.0000

Aqueous Phase

Phase Fraction 0.2627

COMPONENTS	MOLAR FLOW (kgmole/h)	MOLE FRACTION	MASS FLOW (tonne/d)	MASS FRACTION	LIQUID VOLUME FLOW (m3/h)	LIQUID VOLUME FRACTION
Methane	0.0003	0.0000	0.0001	0.0000	0.0000	0.0000
Ethane	0.0000	0.0000	0.0000	0.0000	0.0000	0.0000
Propane	0.0000	0.0000	0.0000	0.0000	0.0000	0.0000
i-Butane	0.0000	0.0000	0.0000	0.0000	0.0000	0.0000
n-Butane	0.0000	0.0000	0.0000	0.0000	0.0000	0.0000
i-Pentane	0.0000	0.0000	0.0000	0.0000	0.0000	0.0000
n-Pentane	0.0000	0.0000	0.0000	0.0000	0.0000	0.0000
n-Hexane	0.0000	0.0000	0.0000	0.0000	0.0000	0.0000
Nitrogen	0.0008	0.0000	0.0005	0.0000	0.0000	0.0000
CO2	0.0263	0.0003	0.0277	0.0006	0.0014	0.0008
H2S	0.0000	0.0000	0.0000	0.0000	0.0000	0.0000
H2O	103.0121	0.9997	44.5386	0.9994	1.8595	0.9992
NBP[1]95*	0.0000	0.0000	0.0000	0.0000	0.0000	0.0000
NBP[1]121*	0.0000	0.0000	0.0000	0.0000	0.0000	0.0000
NBP[1]147*	0.0000	0.0000	0.0000	0.0000	0.0000	0.0000
NBP[1]171*	0.0000	0.0000	0.0000	0.0000	0.0000	0.0000
NBP[1]195*	0.0000	0.0000	0.0000	0.0000	0.0000	0.0000
NBP[1]222*	0.0000	0.0000	0.0000	0.0000	0.0000	0.0000
NBP[1]248*	0.0000	0.0000	0.0000	0.0000	0.0000	0.0000
NBP[1]273*	0.0000	0.0000	0.0000	0.0000	0.0000	0.0000
NBP[1]299*	0.0000	0.0000	0.0000	0.0000	0.0000	0.0000
NBP[1]325*	0.0000	0.0000	0.0000	0.0000	0.0000	0.0000
NBP[1]351*	0.0000	0.0000	0.0000	0.0000	0.0000	0.0000
NBP[1]377*	0.0000	0.0000	0.0000	0.0000	0.0000	0.0000
NBP[1]402*	0.0000	0.0000	0.0000	0.0000	0.0000	0.0000
NBP[1]428*	0.0000	0.0000	0.0000	0.0000	0.0000	0.0000
NBP[1]454*	0.0000	0.0000	0.0000	0.0000	0.0000	0.0000
NBP[1]480*	0.0000	0.0000	0.0000	0.0000	0.0000	0.0000
NBP[1]505*	0.0000	0.0000	0.0000	0.0000	0.0000	0.0000
NBP[1]531*	0.0000	0.0000	0.0000	0.0000	0.0000	0.0000
NBP[1]557*	0.0000	0.0000	0.0000	0.0000	0.0000	0.0000
NBP[1]582*	0.0000	0.0000	0.0000	0.0000	0.0000	0.0000
NBP[1]608*	0.0000	0.0000	0.0000	0.0000	0.0000	0.0000

* Specified by user.

Material Stream: 8 (continued)

Fluid Package: Basis-1
Property Package: Peng-Robinson

COMPOSITION

Aqueous Phase (continued)

Phase Fraction 0.2627

COMPONENTS	MOLAR FLOW (kgmole/h)	MOLE FRACTION	MASS FLOW (tonne/d)	MASS FRACTION	LIQUID VOLUME FLOW (m3/h)	LIQUID VOLUME FRACTION
NBP[1]634*	0.0000	0.0000	0.0000	0.0000	0.0000	0.0000
NBP[1]659*	0.0000	0.0000	0.0000	0.0000	0.0000	0.0000
NBP[1]685*	0.0000	0.0000	0.0000	0.0000	0.0000	0.0000
NBP[1]711*	0.0000	0.0000	0.0000	0.0000	0.0000	0.0000
NBP[1]736*	0.0000	0.0000	0.0000	0.0000	0.0000	0.0000
NBP[1]762*	0.0000	0.0000	0.0000	0.0000	0.0000	0.0000
NBP[1]788*	0.0000	0.0000	0.0000	0.0000	0.0000	0.0000
NBP[1]825*	0.0000	0.0000	0.0000	0.0000	0.0000	0.0000
NBP[1]873*	0.0000	0.0000	0.0000	0.0000	0.0000	0.0000
NBP[1]926*	0.0000	0.0000	0.0000	0.0000	0.0000	0.0000
NBP[1]978*	0.0000	0.0000	0.0000	0.0000	0.0000	0.0000
NBP[1]1021*	0.0000	0.0000	0.0000	0.0000	0.0000	0.0000
NBP[1]1075*	0.0000	0.0000	0.0000	0.0000	0.0000	0.0000
NBP[1]1123*	0.0000	0.0000	0.0000	0.0000	0.0000	0.0000
NBP[1]1173*	0.0000	0.0000	0.0000	0.0000	0.0000	0.0000
NBP[1]1250*	0.0000	0.0000	0.0000	0.0000	0.0000	0.0000
NBP[1]1339*	0.0000	0.0000	0.0000	0.0000	0.0000	0.0000
NBP[1]1432*	0.0000	0.0000	0.0000	0.0000	0.0000	0.0000
NBP[1]1528*	0.0000	0.0000	0.0000	0.0000	0.0000	0.0000
NBP[1]1637*	0.0000	0.0000	0.0000	0.0000	0.0000	0.0000
NBP[1]1732*	0.0000	0.0000	0.0000	0.0000	0.0000	0.0000
NBP[1]1819*	0.0000	0.0000	0.0000	0.0000	0.0000	0.0000
NBP[1]1913*	0.0000	0.0000	0.0000	0.0000	0.0000	0.0000
Total	103.0395	1.0000	44.5670	1.0000	1.8610	1.0000

Material Stream: 9

Fluid Package: Basis-1
Property Package: Peng-Robinson

CONDITIONS

		Overall	Vapour Phase	Liquid Phase	Aqueous Phase
Vapour / Phase Fraction		0.0000	0.0000	1.0000	0.0000
Temperature:	(F)	179.8	179.8	179.8	179.8
Pressure:	(psig)	645.0	645.0	645.0	645.0
Molar Flow	(MMSCFD)	0.2185	0.0000	0.2185	0.0000
Mass Flow	(tonne/d)	43.21	0.0000	43.21	0.0000
Std Ideal Liq Vol Flow	(barrel/day)	338.5	0.0000	338.5	0.0000
Molar Enthalpy	(kJ/kgmole)	-3.493e+005	-9.014e+004	-3.493e+005	-2.817e+005
Molar Entropy	(kJ/kgmole-C)	344.5	164.0	344.5	67.32
Heat Flow	(MMBtu/hr)	-3.602	0.0000	-3.602	0.0000
Liq Vol Flow @Std Cond	(barrel/day)	329.8 *	0.0000	329.8	0.0000

PROPERTIES

		Overall	Vapour Phase	Liquid Phase	Aqueous Phase
Molecular Weight		165.4	22.43	165.4	18.02
Molar Density	(kgmole/m3)	4.626	1.696	4.626	53.52
Mass Density	(kg/m3)	765.4	38.04	765.4	964.6
Act. Volume Flow	(barrel/day)	355.1	0.0000	355.1	0.0000
Mass Enthalpy	(kJ/kg)	-2111	-4019	-2111	-1.563e+004
Mass Entropy	(kJ/kg-C)	2.082	7.313	2.082	3.736
Heat Capacity	(kJ/kgmole-C)	362.7	52.41	362.7	78.40
Mass Heat Capacity	(kJ/kg-C)	2.192	2.337	2.192	4.350
LHV Molar Basis (Std)	(Btu/SCF)	---	---	---	2.868e-003
LHV Mass Basis (Std)	(kJ/kg)	---	---	---	0.1405
Phase Fraction [Vol. Basis]		---	---	1.000	---

* Specified by user.

Material Stream: 9 (continued)

Fluid Package: Basis-1
Property Package: Peng-Robinson

PROPERTIES

	Overall	Vapour Phase	Liquid Phase	Aqueous Phase
Phase Fraction [Mass Basis]	0.0000	0.0000	1.000	0.0000
Partial Pressure of CO2 (psig)	-14.70	---	---	---
Cost Based on Flow (Cost/s)	0.0000	0.0000	0.0000	0.0000
Act. Gas Flow (ACT_m3/h)	---	---	---	---
Avg. Liq. Density (kgmole/m3)	4.852	16.65	4.852	55.37
Specific Heat (kJ/kgmole-C)	362.7	52.41	362.7	78.40
Std. Gas Flow (STD_m3/h)	257.3	0.0000	257.3	0.0000
Std. Ideal Liq. Mass Density (kg/m3)	802.7	373.4	802.7	997.8
Act. Liq. Flow (barrel/day)	355.1	---	355.1	0.0000
Z Factor	---	0.9078	0.3328	2.877e-002
Watson K	11.83	16.94	11.83	8.532
User Property	---	---	---	---
Partial Pressure of H2S (psig)	-14.70	---	---	---
Cp/(Cp - R)	1.023	1.189	1.023	1.119
Cp/Cv	1.187	1.337	1.187	1.169
Heat of Vap. (kJ/kgmole)	2.839e+005	---	---	---
Kinematic Viscosity (cSt)	1.262	0.3698	1.262	0.3544
Liq. Mass Density (Std. Cond) (kg/m3)	824.0	0.9528	824.0	1015
Liq. Vol. Flow (Std. Cond) (barrel/day)	329.8	0.0000	329.8	0.0000
Liquid Fraction	1.000	0.0000	1.000	1.000
Molar Volume (m3/kgmole)	0.2162	0.5896	0.2162	1.868e-002
Mass Heat of Vap. (kJ/kg)	1716	---	---	---
Phase Fraction [Molar Basis]	0.0000	0.0000	1.0000	0.0000
Surface Tension (dyne/cm)	15.07	---	15.07	61.93
Thermal Conductivity (W/m-K)	9.787e-002	4.029e-002	9.787e-002	0.6712
Viscosity (cP)	0.9662	1.407e-002	0.9662	0.3418
Cv (Semi-Ideal) (kJ/kgmole-C)	354.4	44.10	354.4	70.08
Mass Cv (Semi-Ideal) (kJ/kg-C)	2.142	1.966	2.142	3.889
Cv (kJ/kgmole-C)	305.5	39.19	305.5	67.08
Mass Cv (kJ/kg-C)	1.846	1.747	1.846	3.722
Cv (Ent. Method) (kJ/kgmole-C)	---	-4561	---	65.09
Mass Cv (Ent. Method) (kJ/kg-C)	---	-203.4	---	3.612
Cp/Cv (Ent. Method)	---	-1.149e-002	---	1.204
Reid VP at 37.8 C (psig)	69.51	---	69.51	---
True VP at 37.8 C (psig)	497.3	5017	497.3	8631
Liq. Vol. Flow - Sum(Std. Cond) (barrel/day)	329.8	0.0000	329.8	0.0000
HHV Molar Basis (Std) (Btu/SCF)	---	---	---	46.45
HHV Mass Basis (Std) (kJ/kg)	---	---	---	2275
CO2 Loading	---	---	---	---
CO2 App ML Con (kgmole/m3)	5.134e-002	---	5.134e-002	---
CO2 App WT Con (kgmol/kg)	6.707e-005	---	6.707e-005	---
Phase Fraction [Act. Vol. Basis]	0.0000	0.0000	1.000	0.0000
Mass Exergy (kJ/kg)	27.68	---	---	---
Viscosity Index	6.277	---	---	---
Ideal Gas Cp/Cv	1.029	1.216	1.029	1.324
Ideal Gas Cp (kJ/kgmole-C)	299.3	46.85	299.3	33.95
Mass Ideal Gas Cp (kJ/kg-C)	1.809	2.089	1.809	1.884
Bubble Point Pressure (psig)	645.0	---	---	---

COMPOSITION

Overall Phase

Vapour Fraction 0.0000

COMPONENTS	MOLAR FLOW (kgmole/h)	MOLE FRACTION	MASS FLOW (tonne/d)	MASS FRACTION	LIQUID VOLUME FLOW (m3/h)	LIQUID VOLUME FRACTION
Methane	1.3199	0.1213	0.5082	0.0118	0.0707	0.0315
Ethane	0.5182	0.0476	0.3740	0.0087	0.0438	0.0195
Propane	0.5998	0.0551	0.6347	0.0147	0.0522	0.0233

Licensed to: PETROCHEMICAL ENGINEERIN
* Specified by user.

Material Stream: 9 (continued)

Fluid Package: Basis-1
Property Package: Peng-Robinson

COMPOSITION

Overall Phase (continued)

Vapour Fraction 0.0000

COMPONENTS	MOLAR FLOW (kgmole/h)	MOLE FRACTION	MASS FLOW (tonne/d)	MASS FRACTION	LIQUID VOLUME FLOW (m3/h)	LIQUID VOLUME FRACTION
i-Butane	0.1416	0.0130	0.1976	0.0046	0.0146	0.0065
n-Butane	0.3330	0.0306	0.4646	0.0108	0.0332	0.0148
i-Pentane	0.1232	0.0113	0.2134	0.0049	0.0143	0.0064
n-Pentane	0.1602	0.0147	0.2774	0.0064	0.0184	0.0082
n-Hexane	0.4409	0.0405	0.9120	0.0211	0.0573	0.0256
Nitrogen	0.0187	0.0017	0.0125	0.0003	0.0006	0.0003
CO2	0.1207	0.0111	0.1275	0.0030	0.0064	0.0029
H2S	0.0000	0.0000	0.0000	0.0000	0.0000	0.0000
H2O	0.0510	0.0047	0.0221	0.0005	0.0009	0.0004
NBP[1]95*	0.0483	0.0044	0.0788	0.0018	0.0048	0.0022
NBP[1]121*	0.0724	0.0067	0.1265	0.0029	0.0077	0.0034
NBP[1]147*	0.1177	0.0108	0.2266	0.0052	0.0135	0.0060
NBP[1]171*	0.2790	0.0256	0.5872	0.0136	0.0344	0.0153
NBP[1]195*	0.4464	0.0410	1.0025	0.0232	0.0580	0.0259
NBP[1]222*	0.4104	0.0377	0.9912	0.0229	0.0567	0.0253
NBP[1]248*	0.4042	0.0371	1.0498	0.0243	0.0593	0.0264
NBP[1]273*	0.3731	0.0343	1.0362	0.0240	0.0578	0.0258
NBP[1]299*	0.3243	0.0298	0.9603	0.0222	0.0530	0.0236
NBP[1]325*	0.2549	0.0234	0.8018	0.0186	0.0438	0.0195
NBP[1]351*	0.2193	0.0202	0.7333	0.0170	0.0397	0.0177
NBP[1]377*	0.2091	0.0192	0.7458	0.0173	0.0400	0.0178
NBP[1]402*	0.1970	0.0181	0.7494	0.0173	0.0397	0.0177
NBP[1]428*	0.1908	0.0175	0.7741	0.0179	0.0407	0.0181
NBP[1]454*	0.1924	0.0177	0.8343	0.0193	0.0434	0.0193
NBP[1]480*	0.1963	0.0180	0.9094	0.0210	0.0468	0.0209
NBP[1]505*	0.1909	0.0175	0.9432	0.0218	0.0481	0.0215
NBP[1]531*	0.1847	0.0170	0.9710	0.0225	0.0491	0.0219
NBP[1]557*	0.1781	0.0164	0.9962	0.0231	0.0499	0.0223
NBP[1]582*	0.1704	0.0157	1.0123	0.0234	0.0503	0.0224
NBP[1]608*	0.1642	0.0151	1.0346	0.0239	0.0510	0.0227
NBP[1]634*	0.1611	0.0148	1.0751	0.0249	0.0525	0.0234
NBP[1]659*	0.1586	0.0146	1.1193	0.0259	0.0543	0.0242
NBP[1]685*	0.1641	0.0151	1.2227	0.0283	0.0588	0.0262
NBP[1]711*	0.1715	0.0158	1.3444	0.0311	0.0642	0.0286
NBP[1]736*	0.1697	0.0156	1.3915	0.0322	0.0659	0.0294
NBP[1]762*	0.1653	0.0152	1.4214	0.0329	0.0669	0.0298
NBP[1]788*	0.1585	0.0146	1.4424	0.0334	0.0674	0.0300
NBP[1]825*	0.2655	0.0244	2.5963	0.0601	0.1201	0.0536
NBP[1]873*	0.1830	0.0168	1.9404	0.0449	0.0887	0.0396
NBP[1]926*	0.1437	0.0132	1.6472	0.0381	0.0744	0.0332
NBP[1]978*	0.1474	0.0135	1.8524	0.0429	0.0825	0.0368
NBP[1]1021*	0.0728	0.0067	0.9655	0.0223	0.0426	0.0190
NBP[1]1075*	0.0449	0.0041	0.6310	0.0146	0.0276	0.0123
NBP[1]1123*	0.0417	0.0038	0.6267	0.0145	0.0271	0.0121
NBP[1]1173*	0.0300	0.0028	0.4772	0.0110	0.0205	0.0091
NBP[1]1250*	0.0393	0.0036	0.6767	0.0157	0.0287	0.0128
NBP[1]1339*	0.0364	0.0033	0.6999	0.0162	0.0291	0.0130
NBP[1]1432*	0.0257	0.0024	0.5397	0.0125	0.0221	0.0099
NBP[1]1528*	0.0180	0.0017	0.4082	0.0094	0.0165	0.0074
NBP[1]1637*	0.0127	0.0012	0.3047	0.0071	0.0122	0.0054
NBP[1]1732*	0.0101	0.0009	0.2565	0.0059	0.0101	0.0045
NBP[1]1819*	0.0097	0.0009	0.2589	0.0060	0.0101	0.0045
NBP[1]1913*	0.0000	0.0000	0.0001	0.0000	0.0000	0.0000
Total	10.8812	1.0000	43.2065	1.0000	2.2427	1.0000

* Specified by user.

Material Stream: 9 (continued)

Fluid Package: Basis-1
Property Package: Peng-Robinson

COMPOSITION

Vapour Phase

Phase Fraction 0.0000

COMPONENTS	MOLAR FLOW (kgmole/h)	MOLE FRACTION	MASS FLOW (tonne/d)	MASS FRACTION	LIQUID VOLUME FLOW (m3/h)	LIQUID VOLUME FRACTION
Methane	0.0000	0.7393	0.0000	0.5288	0.0000	0.6596
Ethane	0.0000	0.1016	0.0000	0.1363	0.0000	0.1431
Propane	0.0000	0.0527	0.0000	0.1036	0.0000	0.0764
i-Butane	0.0000	0.0068	0.0000	0.0176	0.0000	0.0117
n-Butane	0.0000	0.0130	0.0000	0.0337	0.0000	0.0216
i-Pentane	0.0000	0.0026	0.0000	0.0084	0.0000	0.0050
n-Pentane	0.0000	0.0029	0.0000	0.0092	0.0000	0.0055
n-Hexane	0.0000	0.0037	0.0000	0.0142	0.0000	0.0080
Nitrogen	0.0000	0.0201	0.0000	0.0250	0.0000	0.0116
CO2	0.0000	0.0333	0.0000	0.0654	0.0000	0.0296
H2S	0.0000	0.0000	0.0000	0.0000	0.0000	0.0000
H2O	0.0000	0.0131	0.0000	0.0105	0.0000	0.0039
NBP[1]95*	0.0000	0.0009	0.0000	0.0026	0.0000	0.0014
NBP[1]121*	0.0000	0.0010	0.0000	0.0031	0.0000	0.0017
NBP[1]147*	0.0000	0.0011	0.0000	0.0040	0.0000	0.0021
NBP[1]171*	0.0000	0.0020	0.0000	0.0076	0.0000	0.0040
NBP[1]195*	0.0000	0.0023	0.0000	0.0094	0.0000	0.0049
NBP[1]222*	0.0000	0.0014	0.0000	0.0063	0.0000	0.0032
NBP[1]248*	0.0000	0.0009	0.0000	0.0045	0.0000	0.0023
NBP[1]273*	0.0000	0.0006	0.0000	0.0030	0.0000	0.0015
NBP[1]299*	0.0000	0.0003	0.0000	0.0019	0.0000	0.0009
NBP[1]325*	0.0000	0.0002	0.0000	0.0010	0.0000	0.0005
NBP[1]351*	0.0000	0.0001	0.0000	0.0006	0.0000	0.0003
NBP[1]377*	0.0000	0.0001	0.0000	0.0004	0.0000	0.0002
NBP[1]402*	0.0000	0.0000	0.0000	0.0002	0.0000	0.0001
NBP[1]428*	0.0000	0.0000	0.0000	0.0001	0.0000	0.0001
NBP[1]454*	0.0000	0.0000	0.0000	0.0001	0.0000	0.0000
NBP[1]480*	0.0000	0.0000	0.0000	0.0001	0.0000	0.0000
NBP[1]505*	0.0000	0.0000	0.0000	0.0000	0.0000	0.0000
NBP[1]531*	0.0000	0.0000	0.0000	0.0000	0.0000	0.0000
NBP[1]557*	0.0000	0.0000	0.0000	0.0000	0.0000	0.0000
NBP[1]582*	0.0000	0.0000	0.0000	0.0000	0.0000	0.0000
NBP[1]608*	0.0000	0.0000	0.0000	0.0000	0.0000	0.0000
NBP[1]634*	0.0000	0.0000	0.0000	0.0000	0.0000	0.0000
NBP[1]659*	0.0000	0.0000	0.0000	0.0000	0.0000	0.0000
NBP[1]685*	0.0000	0.0000	0.0000	0.0000	0.0000	0.0000
NBP[1]711*	0.0000	0.0000	0.0000	0.0000	0.0000	0.0000
NBP[1]736*	0.0000	0.0000	0.0000	0.0000	0.0000	0.0000
NBP[1]762*	0.0000	0.0000	0.0000	0.0000	0.0000	0.0000
NBP[1]788*	0.0000	0.0000	0.0000	0.0000	0.0000	0.0000
NBP[1]825*	0.0000	0.0000	0.0000	0.0000	0.0000	0.0000
NBP[1]873*	0.0000	0.0000	0.0000	0.0000	0.0000	0.0000
NBP[1]926*	0.0000	0.0000	0.0000	0.0000	0.0000	0.0000
NBP[1]978*	0.0000	0.0000	0.0000	0.0000	0.0000	0.0000
NBP[1]1021*	0.0000	0.0000	0.0000	0.0000	0.0000	0.0000
NBP[1]1075*	0.0000	0.0000	0.0000	0.0000	0.0000	0.0000
NBP[1]1123*	0.0000	0.0000	0.0000	0.0000	0.0000	0.0000
NBP[1]1173*	0.0000	0.0000	0.0000	0.0000	0.0000	0.0000
NBP[1]1250*	0.0000	0.0000	0.0000	0.0000	0.0000	0.0000
NBP[1]1339*	0.0000	0.0000	0.0000	0.0000	0.0000	0.0000
NBP[1]1432*	0.0000	0.0000	0.0000	0.0000	0.0000	0.0000
NBP[1]1528*	0.0000	0.0000	0.0000	0.0000	0.0000	0.0000
NBP[1]1637*	0.0000	0.0000	0.0000	0.0000	0.0000	0.0000
NBP[1]1732*	0.0000	0.0000	0.0000	0.0000	0.0000	0.0000

* Specified by user.

Material Stream: 9 (continued)

Fluid Package: Basis-1
Property Package: Peng-Robinson

COMPOSITION

Vapour Phase (continued)

Phase Fraction 0.0000

COMPONENTS	MOLAR FLOW (kgmole/h)	MOLE FRACTION	MASS FLOW (tonne/d)	MASS FRACTION	LIQUID VOLUME FLOW (m3/h)	LIQUID VOLUME FRACTION
NBP[1]1819*	0.0000	0.0000	0.0000	0.0000	0.0000	0.0000
NBP[1]1913*	0.0000	0.0000	0.0000	0.0021	0.0000	0.0007
Total	0.0000	1.0000	0.0000	1.0000	0.0000	1.0000

Liquid Phase

Phase Fraction 1.000

COMPONENTS	MOLAR FLOW (kgmole/h)	MOLE FRACTION	MASS FLOW (tonne/d)	MASS FRACTION	LIQUID VOLUME FLOW (m3/h)	LIQUID VOLUME FRACTION
Methane	1.3199	0.1213	0.5082	0.0118	0.0707	0.0315
Ethane	0.5182	0.0476	0.3740	0.0087	0.0438	0.0195
Propane	0.5998	0.0551	0.6347	0.0147	0.0522	0.0233
i-Butane	0.1416	0.0130	0.1976	0.0046	0.0146	0.0065
n-Butane	0.3330	0.0306	0.4646	0.0108	0.0332	0.0148
i-Pentane	0.1232	0.0113	0.2134	0.0049	0.0143	0.0064
n-Pentane	0.1602	0.0147	0.2774	0.0064	0.0184	0.0082
n-Hexane	0.4409	0.0405	0.9120	0.0211	0.0573	0.0256
Nitrogen	0.0187	0.0017	0.0125	0.0003	0.0006	0.0003
CO2	0.1207	0.0111	0.1275	0.0030	0.0064	0.0029
H2S	0.0000	0.0000	0.0000	0.0000	0.0000	0.0000
H2O	0.0510	0.0047	0.0221	0.0005	0.0009	0.0004
NBP[1]95*	0.0483	0.0044	0.0788	0.0018	0.0048	0.0022
NBP[1]121*	0.0724	0.0067	0.1265	0.0029	0.0077	0.0034
NBP[1]147*	0.1177	0.0108	0.2266	0.0052	0.0135	0.0060
NBP[1]171*	0.2790	0.0256	0.5872	0.0136	0.0344	0.0153
NBP[1]195*	0.4464	0.0410	1.0025	0.0232	0.0580	0.0259
NBP[1]222*	0.4104	0.0377	0.9912	0.0229	0.0567	0.0253
NBP[1]248*	0.4042	0.0371	1.0498	0.0243	0.0593	0.0264
NBP[1]273*	0.3731	0.0343	1.0362	0.0240	0.0578	0.0258
NBP[1]299*	0.3243	0.0298	0.9603	0.0222	0.0530	0.0236
NBP[1]325*	0.2549	0.0234	0.8018	0.0186	0.0438	0.0195
NBP[1]351*	0.2193	0.0202	0.7333	0.0170	0.0397	0.0177
NBP[1]377*	0.2091	0.0192	0.7458	0.0173	0.0400	0.0178
NBP[1]402*	0.1970	0.0181	0.7494	0.0173	0.0397	0.0177
NBP[1]428*	0.1908	0.0175	0.7741	0.0179	0.0407	0.0181
NBP[1]454*	0.1924	0.0177	0.8343	0.0193	0.0434	0.0193
NBP[1]480*	0.1963	0.0180	0.9094	0.0210	0.0468	0.0209
NBP[1]505*	0.1909	0.0175	0.9432	0.0218	0.0481	0.0215
NBP[1]531*	0.1847	0.0170	0.9710	0.0225	0.0491	0.0219
NBP[1]557*	0.1781	0.0164	0.9962	0.0231	0.0499	0.0223
NBP[1]582*	0.1704	0.0157	1.0123	0.0234	0.0503	0.0224
NBP[1]608*	0.1642	0.0151	1.0346	0.0239	0.0510	0.0227
NBP[1]634*	0.1611	0.0148	1.0751	0.0249	0.0525	0.0234
NBP[1]659*	0.1586	0.0146	1.1193	0.0259	0.0543	0.0242
NBP[1]685*	0.1641	0.0151	1.2227	0.0283	0.0588	0.0262
NBP[1]711*	0.1715	0.0158	1.3444	0.0311	0.0642	0.0286
NBP[1]736*	0.1697	0.0156	1.3915	0.0322	0.0659	0.0294
NBP[1]762*	0.1653	0.0152	1.4214	0.0329	0.0669	0.0298
NBP[1]788*	0.1585	0.0146	1.4424	0.0334	0.0674	0.0300
NBP[1]825*	0.2655	0.0244	2.5963	0.0601	0.1201	0.0536
NBP[1]873*	0.1830	0.0168	1.9404	0.0449	0.0887	0.0396
NBP[1]926*	0.1437	0.0132	1.6472	0.0381	0.0744	0.0332
NBP[1]978*	0.1474	0.0135	1.8524	0.0429	0.0825	0.0368
NBP[1]1021*	0.0728	0.0067	0.9655	0.0223	0.0426	0.0190
NBP[1]1075*	0.0449	0.0041	0.6310	0.0146	0.0276	0.0123
NBP[1]1123*	0.0417	0.0038	0.6267	0.0145	0.0271	0.0121

* Specified by user.

Material Stream: 9 (continued)

Fluid Package: Basis-1
Property Package: Peng-Robinson

COMPOSITION

Liquid Phase (continued)

Phase Fraction 1.000

COMPONENTS	MOLAR FLOW (kgmole/h)	MOLE FRACTION	MASS FLOW (tonne/d)	MASS FRACTION	LIQUID VOLUME FLOW (m3/h)	LIQUID VOLUME FRACTION
NBP[1]1173*	0.0300	0.0028	0.4772	0.0110	0.0205	0.0091
NBP[1]1250*	0.0393	0.0036	0.6767	0.0157	0.0287	0.0128
NBP[1]1339*	0.0364	0.0033	0.6999	0.0162	0.0291	0.0130
NBP[1]1432*	0.0257	0.0024	0.5397	0.0125	0.0221	0.0099
NBP[1]1528*	0.0180	0.0017	0.4082	0.0094	0.0165	0.0074
NBP[1]1637*	0.0127	0.0012	0.3047	0.0071	0.0122	0.0054
NBP[1]1732*	0.0101	0.0009	0.2565	0.0059	0.0101	0.0045
NBP[1]1819*	0.0097	0.0009	0.2589	0.0060	0.0101	0.0045
NBP[1]1913*	0.0000	0.0000	0.0001	0.0000	0.0000	0.0000
Total	10.8812	1.0000	43.2065	1.0000	2.2427	1.0000

Aqueous Phase

Phase Fraction 0.0000

COMPONENTS	MOLAR FLOW (kgmole/h)	MOLE FRACTION	MASS FLOW (tonne/d)	MASS FRACTION	LIQUID VOLUME FLOW (m3/h)	LIQUID VOLUME FRACTION
Methane	0.0000	0.0000	0.0000	0.0000	0.0000	0.0000
Ethane	0.0000	0.0000	0.0000	0.0000	0.0000	0.0000
Propane	0.0000	0.0000	0.0000	0.0000	0.0000	0.0000
i-Butane	0.0000	0.0000	0.0000	0.0000	0.0000	0.0000
n-Butane	0.0000	0.0000	0.0000	0.0000	0.0000	0.0000
i-Pentane	0.0000	0.0000	0.0000	0.0000	0.0000	0.0000
n-Pentane	0.0000	0.0000	0.0000	0.0000	0.0000	0.0000
n-Hexane	0.0000	0.0000	0.0000	0.0000	0.0000	0.0000
Nitrogen	0.0000	0.0000	0.0000	0.0000	0.0000	0.0000
CO2	0.0000	0.0003	0.0000	0.0006	0.0000	0.0007
H2S	0.0000	0.0000	0.0000	0.0000	0.0000	0.0000
H2O	0.0000	0.9997	0.0000	0.9994	0.0000	0.9992
NBP[1]95*	0.0000	0.0000	0.0000	0.0000	0.0000	0.0000
NBP[1]121*	0.0000	0.0000	0.0000	0.0000	0.0000	0.0000
NBP[1]147*	0.0000	0.0000	0.0000	0.0000	0.0000	0.0000
NBP[1]171*	0.0000	0.0000	0.0000	0.0000	0.0000	0.0000
NBP[1]195*	0.0000	0.0000	0.0000	0.0000	0.0000	0.0000
NBP[1]222*	0.0000	0.0000	0.0000	0.0000	0.0000	0.0000
NBP[1]248*	0.0000	0.0000	0.0000	0.0000	0.0000	0.0000
NBP[1]273*	0.0000	0.0000	0.0000	0.0000	0.0000	0.0000
NBP[1]299*	0.0000	0.0000	0.0000	0.0000	0.0000	0.0000
NBP[1]325*	0.0000	0.0000	0.0000	0.0000	0.0000	0.0000
NBP[1]351*	0.0000	0.0000	0.0000	0.0000	0.0000	0.0000
NBP[1]377*	0.0000	0.0000	0.0000	0.0000	0.0000	0.0000
NBP[1]402*	0.0000	0.0000	0.0000	0.0000	0.0000	0.0000
NBP[1]428*	0.0000	0.0000	0.0000	0.0000	0.0000	0.0000
NBP[1]454*	0.0000	0.0000	0.0000	0.0000	0.0000	0.0000
NBP[1]480*	0.0000	0.0000	0.0000	0.0000	0.0000	0.0000
NBP[1]505*	0.0000	0.0000	0.0000	0.0000	0.0000	0.0000
NBP[1]531*	0.0000	0.0000	0.0000	0.0000	0.0000	0.0000
NBP[1]557*	0.0000	0.0000	0.0000	0.0000	0.0000	0.0000
NBP[1]582*	0.0000	0.0000	0.0000	0.0000	0.0000	0.0000
NBP[1]608*	0.0000	0.0000	0.0000	0.0000	0.0000	0.0000
NBP[1]634*	0.0000	0.0000	0.0000	0.0000	0.0000	0.0000
NBP[1]659*	0.0000	0.0000	0.0000	0.0000	0.0000	0.0000
NBP[1]685*	0.0000	0.0000	0.0000	0.0000	0.0000	0.0000
NBP[1]711*	0.0000	0.0000	0.0000	0.0000	0.0000	0.0000
NBP[1]736*	0.0000	0.0000	0.0000	0.0000	0.0000	0.0000
NBP[1]762*	0.0000	0.0000	0.0000	0.0000	0.0000	0.0000
NBP[1]788*	0.0000	0.0000	0.0000	0.0000	0.0000	0.0000

* Specified by user.

Material Stream: 9 (continued)

Fluid Package: Basis-1
Property Package: Peng-Robinson

COMPOSITION

Aqueous Phase (continued)

Phase Fraction 0.0000

COMPONENTS	MOLAR FLOW (kgmole/h)	MOLE FRACTION	MASS FLOW (tonne/d)	MASS FRACTION	LIQUID VOLUME FLOW (m3/h)	LIQUID VOLUME FRACTION
NBP[1]825*	0.0000	0.0000	0.0000	0.0000	0.0000	0.0000
NBP[1]873*	0.0000	0.0000	0.0000	0.0000	0.0000	0.0000
NBP[1]926*	0.0000	0.0000	0.0000	0.0000	0.0000	0.0000
NBP[1]978*	0.0000	0.0000	0.0000	0.0000	0.0000	0.0000
NBP[1]1021*	0.0000	0.0000	0.0000	0.0000	0.0000	0.0000
NBP[1]1075*	0.0000	0.0000	0.0000	0.0000	0.0000	0.0000
NBP[1]1123*	0.0000	0.0000	0.0000	0.0000	0.0000	0.0000
NBP[1]1173*	0.0000	0.0000	0.0000	0.0000	0.0000	0.0000
NBP[1]1250*	0.0000	0.0000	0.0000	0.0000	0.0000	0.0000
NBP[1]1339*	0.0000	0.0000	0.0000	0.0000	0.0000	0.0000
NBP[1]1432*	0.0000	0.0000	0.0000	0.0000	0.0000	0.0000
NBP[1]1528*	0.0000	0.0000	0.0000	0.0000	0.0000	0.0000
NBP[1]1637*	0.0000	0.0000	0.0000	0.0000	0.0000	0.0000
NBP[1]1732*	0.0000	0.0000	0.0000	0.0000	0.0000	0.0000
NBP[1]1819*	0.0000	0.0000	0.0000	0.0000	0.0000	0.0000
NBP[1]1913*	0.0000	0.0000	0.0000	0.0000	0.0000	0.0000
Total	0.0000	1.0000	0.0000	1.0000	0.0000	1.0000

Material Stream: 10

Fluid Package: Basis-1
Property Package: Peng-Robinson

CONDITIONS

		Overall	Vapour Phase	Liquid Phase	Liquid Phase
Vapour / Phase Fraction		0.3011	0.3011	0.0110	0.6879
Temperature:	(F)	172.4	172.4	172.4	172.4
Pressure:	(psig)	20.00 *	20.00	20.00	20.00
Molar Flow	(MMSCFD)	0.2185	6.577e-002	2.405e-003	0.1503
Mass Flow	(tonne/d)	43.21	3.009	2.198	38.00
Std Ideal Liq Vol Flow	(barrel/day)	338.5	38.66	13.60	286.3
Molar Enthalpy	(kJ/kgmole)	-3.493e+005	-1.093e+005	-1.561e+006	-4.349e+005
Molar Entropy	(kJ/kgmole-C)	352.7	192.7	1884	398.2
Heat Flow	(MMBtu/hr)	-3.602	-0.3395	-0.1772	-3.086
Liq Vol Flow @Std Cond	(barrel/day)	329.8 *	41.96	13.83	285.7

PROPERTIES

		Overall	Vapour Phase	Liquid Phase	Liquid Phase
Molecular Weight		165.4	38.27	764.6	211.5
Molar Density	(kgmole/m3)	0.2629	8.338e-002	1.257	3.730
Mass Density	(kg/m3)	43.49	3.191	961.0	789.0
Act. Volume Flow	(barrel/day)	6248	5931	14.39	302.9
Mass Enthalpy	(kJ/kg)	-2111	-2857	-2041	-2056
Mass Entropy	(kJ/kg-C)	2.132	5.035	2.464	1.883
Heat Capacity	(kJ/kgmole-C)	352.6	74.49	1595	454.4
Mass Heat Capacity	(kJ/kg-C)	2.131	1.947	2.086	2.148
LHV Molar Basis (Std)	(Btu/SCF)	---	---	---	---
LHV Mass Basis (Std)	(kJ/kg)	---	---	---	---
Phase Fraction [Vol. Basis]		0.1142	0.1142	4.016e-002	0.8456
Phase Fraction [Mass Basis]		6.963e-002	6.963e-002	5.088e-002	0.8795
Partial Pressure of CO2	(psig)	-13.48	---	---	---
Cost Based on Flow	(Cost/s)	0.0000	0.0000	0.0000	0.0000
Act. Gas Flow	(ACT_m3/h)	39.29	39.29	---	---
Avg. Liq. Density	(kgmole/m3)	4.852	12.79	1.330	3.947
Specific Heat	(kJ/kgmole-C)	352.6	74.49	1595	454.4
Std. Gas Flow	(STD_m3/h)	257.3	77.46	2.833	177.0

* Specified by user.

Material Stream: 10 (continued)

Fluid Package: Basis-1
Property Package: Peng-Robinson

PROPERTIES

	Overall	Vapour Phase	Liquid Phase	Liquid Phase
Std. Ideal Liq. Mass Density (kg/m3)	802.7	489.5	1017	834.8
Act. Liq. Flow (barrel/day)	317.3	---	14.39	302.9
Z Factor	---	0.9828	6.519e-002	2.197e-002
Watson K	11.83	14.63	11.99	11.85
User Property	---	---	---	---
Partial Pressure of H2S (psig)	-14.70	---	---	---
Cp/(Cp - R)	1.024	1.126	1.005	1.019
Cp/Cv	1.008	1.136	1.372	1.019
Heat of Vap. (kJ/kgmole)	3.787e+005	---	---	---
Kinematic Viscosity (cSt)	---	3.602	421.2	1.764
Liq. Mass Density (Std. Cond) (kg/m3)	824.0	451.0	999.6	836.7
Liq. Vol. Flow (Std. Cond) (barrel/day)	329.8	41.96	13.83	285.7
Liquid Fraction	0.6989	0.0000	1.000	1.000
Molar Volume (m3/kgmole)	3.804	11.99	0.7956	0.2681
Mass Heat of Vap. (kJ/kg)	2289	---	---	---
Phase Fraction [Molar Basis]	0.3011	0.3011	0.0110	0.6879
Surface Tension (dyne/cm)	---	---	23.56	20.34
Thermal Conductivity (W/m-K)	---	2.804e-002	0.1324	0.1102
Viscosity (cP)	---	1.149e-002	404.8	1.392
Cv (Semi-Ideal) (kJ/kgmole-C)	344.3	66.18	1586	---
Mass Cv (Semi-Ideal) (kJ/kg-C)	2.081	1.729	2.075	---
Cv (kJ/kgmole-C)	349.8	65.59	1162	---
Mass Cv (kJ/kg-C)	2.114	1.714	1.520	---
Cv (Ent. Method) (kJ/kgmole-C)	---	---	1338	---
Mass Cv (Ent. Method) (kJ/kg-C)	---	---	1.750	---
Cp/Cv (Ent. Method)	---	---	1.192	---
Reid VP at 37.8 C (psig)	69.51	706.7	-10.52	-7.854
True VP at 37.8 C (psig)	497.3	1530	9.639	7.291
Liq. Vol. Flow - Sum(Std. Cond) (barrel/day)	55.79	41.96	13.83	0.0000
HHV Molar Basis (Std) (Btu/SCF)	---	---	---	---
HHV Mass Basis (Std) (kJ/kg)	---	---	---	---
CO2 Loading	---	---	---	---
CO2 App ML Con (kgmole/m3)	---	---	1.207e-003	2.676e-003
CO2 App WT Con (kgmol/kg)	---	---	1.256e-006	3.392e-006
Phase Fraction [Act. Vol. Basis]	0.9492	0.9492	2.303e-003	4.848e-002
Mass Exergy (kJ/kg)	12.96	---	---	---
Viscosity Index	6.708	---	---	---
Ideal Gas Cp/Cv	1.029	1.127	1.006	1.023
Ideal Gas Cp (kJ/kgmole-C)	296.2	73.82	1366	376.4
Mass Ideal Gas Cp (kJ/kg-C)	1.790	1.929	1.787	1.780
Bubble Point Pressure (psig)	631.4	---	---	---

COMPOSITION

Overall Phase

Vapour Fraction 0.3011

COMPONENTS	MOLAR FLOW (kgmole/h)	MOLE FRACTION	MASS FLOW (tonne/d)	MASS FRACTION	LIQUID VOLUME FLOW (m3/h)	LIQUID VOLUME FRACTION
Methane	1.3199	0.1213	0.5082	0.0118	0.0707	0.0315
Ethane	0.5182	0.0476	0.3740	0.0087	0.0438	0.0195
Propane	0.5998	0.0551	0.6347	0.0147	0.0522	0.0233
i-Butane	0.1416	0.0130	0.1976	0.0046	0.0146	0.0065
n-Butane	0.3330	0.0306	0.4646	0.0108	0.0332	0.0148
i-Pentane	0.1232	0.0113	0.2134	0.0049	0.0143	0.0064
n-Pentane	0.1602	0.0147	0.2774	0.0064	0.0184	0.0082
n-Hexane	0.4409	0.0405	0.9120	0.0211	0.0573	0.0256
Nitrogen	0.0187	0.0017	0.0125	0.0003	0.0006	0.0003
CO2	0.1207	0.0111	0.1275	0.0030	0.0064	0.0029

* Specified by user.

Material Stream: 10 (continued)

Fluid Package: Basis-1
Property Package: Peng-Robinson

COMPOSITION

Overall Phase (continued)

Vapour Fraction 0.3011

COMPONENTS	MOLAR FLOW (kgmole/h)	MOLE FRACTION	MASS FLOW (tonne/d)	MASS FRACTION	LIQUID VOLUME FLOW (m3/h)	LIQUID VOLUME FRACTION
H2S	0.0000	0.0000	0.0000	0.0000	0.0000	0.0000
H2O	0.0510	0.0047	0.0221	0.0005	0.0009	0.0004
NBP[1]95*	0.0483	0.0044	0.0788	0.0018	0.0048	0.0022
NBP[1]121*	0.0724	0.0067	0.1265	0.0029	0.0077	0.0034
NBP[1]147*	0.1177	0.0108	0.2266	0.0052	0.0135	0.0060
NBP[1]171*	0.2790	0.0256	0.5872	0.0136	0.0344	0.0153
NBP[1]195*	0.4464	0.0410	1.0025	0.0232	0.0580	0.0259
NBP[1]222*	0.4104	0.0377	0.9912	0.0229	0.0567	0.0253
NBP[1]248*	0.4042	0.0371	1.0498	0.0243	0.0593	0.0264
NBP[1]273*	0.3731	0.0343	1.0362	0.0240	0.0578	0.0258
NBP[1]299*	0.3243	0.0298	0.9603	0.0222	0.0530	0.0236
NBP[1]325*	0.2549	0.0234	0.8018	0.0186	0.0438	0.0195
NBP[1]351*	0.2193	0.0202	0.7333	0.0170	0.0397	0.0177
NBP[1]377*	0.2091	0.0192	0.7458	0.0173	0.0400	0.0178
NBP[1]402*	0.1970	0.0181	0.7494	0.0173	0.0397	0.0177
NBP[1]428*	0.1908	0.0175	0.7741	0.0179	0.0407	0.0181
NBP[1]454*	0.1924	0.0177	0.8343	0.0193	0.0434	0.0193
NBP[1]480*	0.1963	0.0180	0.9094	0.0210	0.0468	0.0209
NBP[1]505*	0.1909	0.0175	0.9432	0.0218	0.0481	0.0215
NBP[1]531*	0.1847	0.0170	0.9710	0.0225	0.0491	0.0219
NBP[1]557*	0.1781	0.0164	0.9962	0.0231	0.0499	0.0223
NBP[1]582*	0.1704	0.0157	1.0123	0.0234	0.0503	0.0224
NBP[1]608*	0.1642	0.0151	1.0346	0.0239	0.0510	0.0227
NBP[1]634*	0.1611	0.0148	1.0751	0.0249	0.0525	0.0234
NBP[1]659*	0.1586	0.0146	1.1193	0.0259	0.0543	0.0242
NBP[1]685*	0.1641	0.0151	1.2227	0.0283	0.0588	0.0262
NBP[1]711*	0.1715	0.0158	1.3444	0.0311	0.0642	0.0286
NBP[1]736*	0.1697	0.0156	1.3915	0.0322	0.0659	0.0294
NBP[1]762*	0.1653	0.0152	1.4214	0.0329	0.0669	0.0298
NBP[1]788*	0.1585	0.0146	1.4424	0.0334	0.0674	0.0300
NBP[1]825*	0.2655	0.0244	2.5963	0.0601	0.1201	0.0536
NBP[1]873*	0.1830	0.0168	1.9404	0.0449	0.0887	0.0396
NBP[1]926*	0.1437	0.0132	1.6472	0.0381	0.0744	0.0332
NBP[1]978*	0.1474	0.0135	1.8524	0.0429	0.0825	0.0368
NBP[1]1021*	0.0728	0.0067	0.9655	0.0223	0.0426	0.0190
NBP[1]1075*	0.0449	0.0041	0.6310	0.0146	0.0276	0.0123
NBP[1]1123*	0.0417	0.0038	0.6267	0.0145	0.0271	0.0121
NBP[1]1173*	0.0300	0.0028	0.4772	0.0110	0.0205	0.0091
NBP[1]1250*	0.0393	0.0036	0.6767	0.0157	0.0287	0.0128
NBP[1]1339*	0.0364	0.0033	0.6999	0.0162	0.0291	0.0130
NBP[1]1432*	0.0257	0.0024	0.5397	0.0125	0.0221	0.0099
NBP[1]1528*	0.0180	0.0017	0.4082	0.0094	0.0165	0.0074
NBP[1]1637*	0.0127	0.0012	0.3047	0.0071	0.0122	0.0054
NBP[1]1732*	0.0101	0.0009	0.2565	0.0059	0.0101	0.0045
NBP[1]1819*	0.0097	0.0009	0.2589	0.0060	0.0101	0.0045
NBP[1]1913*	0.0000	0.0000	0.0001	0.0000	0.0000	0.0000
Total	10.8812	1.0000	43.2065	1.0000	2.2427	1.0000

Vapour Phase

Phase Fraction 0.3011

COMPONENTS	MOLAR FLOW (kgmole/h)	MOLE FRACTION	MASS FLOW (tonne/d)	MASS FRACTION	LIQUID VOLUME FLOW (m3/h)	LIQUID VOLUME FRACTION
Methane	1.2929	0.3947	0.4978	0.1655	0.0693	0.2705
Ethane	0.4822	0.1472	0.3480	0.1157	0.0408	0.1592
Propane	0.5005	0.1528	0.5297	0.1760	0.0436	0.1701

* Specified by user.

Material Stream: 10 (continued)

Fluid Package: Basis-1
Property Package: Peng-Robinson

COMPOSITION

Vapour Phase (continued)

Phase Fraction 0.3011

COMPONENTS	MOLAR FLOW (kgmole/h)	MOLE FRACTION	MASS FLOW (tonne/d)	MASS FRACTION	LIQUID VOLUME FLOW (m3/h)	LIQUID VOLUME FRACTION
i-Butane	0.1000	0.0305	0.1395	0.0464	0.0103	0.0404
n-Butane	0.2174	0.0664	0.3032	0.1008	0.0217	0.0846
i-Pentane	0.0580	0.0177	0.1005	0.0334	0.0067	0.0262
n-Pentane	0.0676	0.0206	0.1170	0.0389	0.0077	0.0302
n-Hexane	0.0988	0.0302	0.2044	0.0679	0.0129	0.0502
Nitrogen	0.0185	0.0056	0.0124	0.0041	0.0006	0.0025
CO2	0.1153	0.0352	0.1217	0.0405	0.0061	0.0240
H2S	0.0000	0.0000	0.0000	0.0000	0.0000	0.0000
H2O	0.0486	0.0148	0.0210	0.0070	0.0009	0.0034
NBP[1]95*	0.0204	0.0062	0.0332	0.0110	0.0020	0.0080
NBP[1]121*	0.0243	0.0074	0.0425	0.0141	0.0026	0.0100
NBP[1]147*	0.0300	0.0092	0.0578	0.0192	0.0034	0.0134
NBP[1]171*	0.0529	0.0161	0.1113	0.0370	0.0065	0.0254
NBP[1]195*	0.0609	0.0186	0.1367	0.0454	0.0079	0.0309
NBP[1]222*	0.0365	0.0111	0.0882	0.0293	0.0050	0.0197
NBP[1]248*	0.0233	0.0071	0.0605	0.0201	0.0034	0.0133
NBP[1]273*	0.0136	0.0042	0.0378	0.0126	0.0021	0.0082
NBP[1]299*	0.0073	0.0022	0.0217	0.0072	0.0012	0.0047
NBP[1]325*	0.0034	0.0010	0.0108	0.0036	0.0006	0.0023
NBP[1]351*	0.0017	0.0005	0.0057	0.0019	0.0003	0.0012
NBP[1]377*	0.0009	0.0003	0.0033	0.0011	0.0002	0.0007
NBP[1]402*	0.0005	0.0001	0.0018	0.0006	0.0001	0.0004
NBP[1]428*	0.0003	0.0001	0.0010	0.0003	0.0001	0.0002
NBP[1]454*	0.0001	0.0000	0.0006	0.0002	0.0000	0.0001
NBP[1]480*	0.0001	0.0000	0.0003	0.0001	0.0000	0.0001
NBP[1]505*	0.0000	0.0000	0.0002	0.0001	0.0000	0.0000
NBP[1]531*	0.0000	0.0000	0.0001	0.0000	0.0000	0.0000
NBP[1]557*	0.0000	0.0000	0.0000	0.0000	0.0000	0.0000
NBP[1]582*	0.0000	0.0000	0.0000	0.0000	0.0000	0.0000
NBP[1]608*	0.0000	0.0000	0.0000	0.0000	0.0000	0.0000
NBP[1]634*	0.0000	0.0000	0.0000	0.0000	0.0000	0.0000
NBP[1]659*	0.0000	0.0000	0.0000	0.0000	0.0000	0.0000
NBP[1]685*	0.0000	0.0000	0.0000	0.0000	0.0000	0.0000
NBP[1]711*	0.0000	0.0000	0.0000	0.0000	0.0000	0.0000
NBP[1]736*	0.0000	0.0000	0.0000	0.0000	0.0000	0.0000
NBP[1]762*	0.0000	0.0000	0.0000	0.0000	0.0000	0.0000
NBP[1]788*	0.0000	0.0000	0.0000	0.0000	0.0000	0.0000
NBP[1]825*	0.0000	0.0000	0.0000	0.0000	0.0000	0.0000
NBP[1]873*	0.0000	0.0000	0.0000	0.0000	0.0000	0.0000
NBP[1]926*	0.0000	0.0000	0.0000	0.0000	0.0000	0.0000
NBP[1]978*	0.0000	0.0000	0.0000	0.0000	0.0000	0.0000
NBP[1]1021*	0.0000	0.0000	0.0000	0.0000	0.0000	0.0000
NBP[1]1075*	0.0000	0.0000	0.0000	0.0000	0.0000	0.0000
NBP[1]1123*	0.0000	0.0000	0.0000	0.0000	0.0000	0.0000
NBP[1]1173*	0.0000	0.0000	0.0000	0.0000	0.0000	0.0000
NBP[1]1250*	0.0000	0.0000	0.0000	0.0000	0.0000	0.0000
NBP[1]1339*	0.0000	0.0000	0.0000	0.0000	0.0000	0.0000
NBP[1]1432*	0.0000	0.0000	0.0000	0.0000	0.0000	0.0000
NBP[1]1528*	0.0000	0.0000	0.0000	0.0000	0.0000	0.0000
NBP[1]1637*	0.0000	0.0000	0.0000	0.0000	0.0000	0.0000
NBP[1]1732*	0.0000	0.0000	0.0000	0.0000	0.0000	0.0000
NBP[1]1819*	0.0000	0.0000	0.0000	0.0000	0.0000	0.0000
NBP[1]1913*	0.0000	0.0000	0.0000	0.0000	0.0000	0.0000
Total	3.2759	1.0000	3.0086	1.0000	0.2561	1.0000

Licensed to: PETROCHEMICAL ENGINEERIN
* Specified by user.

Material Stream: 10 (continued)

Fluid Package: Basis-1
Property Package: Peng-Robinson

COMPOSITION

Liquid Phase

Phase Fraction 1.101e-002

COMPONENTS	MOLAR FLOW (kgmole/h)	MOLE FRACTION	MASS FLOW (tonne/d)	MASS FRACTION	LIQUID VOLUME FLOW (m3/h)	LIQUID VOLUME FRACTION
Methane	0.0006	0.0048	0.0002	0.0001	0.0000	0.0003
Ethane	0.0005	0.0043	0.0004	0.0002	0.0000	0.0005
Propane	0.0011	0.0093	0.0012	0.0005	0.0001	0.0011
i-Butane	0.0004	0.0034	0.0006	0.0003	0.0000	0.0005
n-Butane	0.0010	0.0086	0.0014	0.0007	0.0001	0.0011
i-Pentane	0.0005	0.0042	0.0009	0.0004	0.0001	0.0006
n-Pentane	0.0007	0.0056	0.0012	0.0005	0.0001	0.0009
n-Hexane	0.0021	0.0173	0.0043	0.0020	0.0003	0.0030
Nitrogen	0.0000	0.0000	0.0000	0.0000	0.0000	0.0000
CO2	0.0001	0.0010	0.0001	0.0001	0.0000	0.0001
H2S	0.0000	0.0000	0.0000	0.0000	0.0000	0.0000
H2O	0.0000	0.0004	0.0000	0.0000	0.0000	0.0000
NBP[1]95*	0.0002	0.0016	0.0003	0.0001	0.0000	0.0002
NBP[1]121*	0.0003	0.0026	0.0005	0.0002	0.0000	0.0004
NBP[1]147*	0.0005	0.0043	0.0010	0.0005	0.0001	0.0007
NBP[1]171*	0.0012	0.0102	0.0026	0.0012	0.0002	0.0017
NBP[1]195*	0.0019	0.0161	0.0043	0.0020	0.0003	0.0028
NBP[1]222*	0.0017	0.0144	0.0042	0.0019	0.0002	0.0026
NBP[1]248*	0.0016	0.0135	0.0042	0.0019	0.0002	0.0026
NBP[1]273*	0.0014	0.0118	0.0039	0.0018	0.0002	0.0024
NBP[1]299*	0.0012	0.0096	0.0034	0.0016	0.0002	0.0021
NBP[1]325*	0.0008	0.0071	0.0027	0.0012	0.0001	0.0016
NBP[1]351*	0.0007	0.0057	0.0023	0.0010	0.0001	0.0014
NBP[1]377*	0.0006	0.0050	0.0021	0.0010	0.0001	0.0013
NBP[1]402*	0.0005	0.0043	0.0020	0.0009	0.0001	0.0012
NBP[1]428*	0.0005	0.0039	0.0019	0.0009	0.0001	0.0011
NBP[1]454*	0.0004	0.0036	0.0019	0.0009	0.0001	0.0011
NBP[1]480*	0.0004	0.0034	0.0019	0.0009	0.0001	0.0011
NBP[1]505*	0.0004	0.0031	0.0018	0.0008	0.0001	0.0010
NBP[1]531*	0.0003	0.0027	0.0017	0.0008	0.0001	0.0010
NBP[1]557*	0.0003	0.0024	0.0016	0.0007	0.0001	0.0009
NBP[1]582*	0.0003	0.0022	0.0015	0.0007	0.0001	0.0009
NBP[1]608*	0.0002	0.0019	0.0015	0.0007	0.0001	0.0008
NBP[1]634*	0.0002	0.0018	0.0014	0.0006	0.0001	0.0008
NBP[1]659*	0.0002	0.0016	0.0014	0.0006	0.0001	0.0007
NBP[1]685*	0.0002	0.0016	0.0014	0.0006	0.0001	0.0008
NBP[1]711*	0.0002	0.0016	0.0015	0.0007	0.0001	0.0008
NBP[1]736*	0.0002	0.0015	0.0015	0.0007	0.0001	0.0008
NBP[1]762*	0.0002	0.0014	0.0014	0.0007	0.0001	0.0008
NBP[1]788*	0.0002	0.0013	0.0014	0.0007	0.0001	0.0007
NBP[1]825*	0.0003	0.0022	0.0026	0.0012	0.0001	0.0013
NBP[1]873*	0.0002	0.0016	0.0020	0.0009	0.0001	0.0010
NBP[1]926*	0.0002	0.0014	0.0020	0.0009	0.0001	0.0010
NBP[1]978*	0.0002	0.0017	0.0026	0.0012	0.0001	0.0013
NBP[1]1021*	0.0001	0.0011	0.0018	0.0008	0.0001	0.0009
NBP[1]1075*	0.0001	0.0012	0.0020	0.0009	0.0001	0.0010
NBP[1]1123*	0.0002	0.0018	0.0033	0.0015	0.0001	0.0016
NBP[1]1173*	0.0004	0.0030	0.0057	0.0026	0.0002	0.0027
NBP[1]1250*	0.0025	0.0208	0.0429	0.0195	0.0018	0.0202
NBP[1]1339*	0.0161	0.1346	0.3102	0.1411	0.0129	0.1434
NBP[1]1432*	0.0251	0.2094	0.5274	0.2399	0.0216	0.2401
NBP[1]1528*	0.0180	0.1504	0.4082	0.1857	0.0165	0.1834
NBP[1]1637*	0.0127	0.1056	0.3047	0.1386	0.0122	0.1352
NBP[1]1732*	0.0101	0.0845	0.2565	0.1167	0.0101	0.1126

* Specified by user.

Material Stream: 10 (continued)

Fluid Package: Basis-1
Property Package: Peng-Robinson

COMPOSITION

Liquid Phase (continued)

Phase Fraction 1.101e-002

COMPONENTS	MOLAR FLOW (kgmole/h)	MOLE FRACTION	MASS FLOW (tonne/d)	MASS FRACTION	LIQUID VOLUME FLOW (m3/h)	LIQUID VOLUME FRACTION
NBP[1]1819*	0.0097	0.0812	0.2589	0.1178	0.0101	0.1122
NBP[1]1913*	0.0000	0.0000	0.0001	0.0000	0.0000	0.0000
Total	0.1198	1.0000	2.1983	1.0000	0.0901	1.0000

Liquid Phase

Phase Fraction 0.6879

COMPONENTS	MOLAR FLOW (kgmole/h)	MOLE FRACTION	MASS FLOW (tonne/d)	MASS FRACTION	LIQUID VOLUME FLOW (m3/h)	LIQUID VOLUME FRACTION
Methane	0.0265	0.0035	0.0102	0.0003	0.0014	0.0007
Ethane	0.0355	0.0047	0.0256	0.0007	0.0030	0.0016
Propane	0.0982	0.0131	0.1039	0.0027	0.0085	0.0045
i-Butane	0.0412	0.0055	0.0575	0.0015	0.0043	0.0022
n-Butane	0.1146	0.0153	0.1599	0.0042	0.0114	0.0060
i-Pentane	0.0647	0.0086	0.1120	0.0029	0.0075	0.0039
n-Pentane	0.0919	0.0123	0.1592	0.0042	0.0105	0.0056
n-Hexane	0.3400	0.0454	0.7033	0.0185	0.0442	0.0233
Nitrogen	0.0002	0.0000	0.0001	0.0000	0.0000	0.0000
CO2	0.0054	0.0007	0.0057	0.0001	0.0003	0.0002
H2S	0.0000	0.0000	0.0000	0.0000	0.0000	0.0000
H2O	0.0024	0.0003	0.0011	0.0000	0.0000	0.0000
NBP[1]95*	0.0278	0.0037	0.0452	0.0012	0.0028	0.0015
NBP[1]121*	0.0478	0.0064	0.0835	0.0022	0.0051	0.0027
NBP[1]147*	0.0872	0.0116	0.1678	0.0044	0.0100	0.0053
NBP[1]171*	0.2249	0.0300	0.4733	0.0125	0.0277	0.0146
NBP[1]195*	0.3836	0.0512	0.8615	0.0227	0.0498	0.0263
NBP[1]222*	0.3721	0.0497	0.8988	0.0237	0.0514	0.0271
NBP[1]248*	0.3793	0.0507	0.9851	0.0259	0.0556	0.0293
NBP[1]273*	0.3581	0.0478	0.9945	0.0262	0.0555	0.0293
NBP[1]299*	0.3158	0.0422	0.9352	0.0246	0.0517	0.0272
NBP[1]325*	0.2506	0.0335	0.7884	0.0207	0.0431	0.0227
NBP[1]351*	0.2169	0.0290	0.7253	0.0191	0.0393	0.0207
NBP[1]377*	0.2076	0.0277	0.7404	0.0195	0.0397	0.0209
NBP[1]402*	0.1960	0.0262	0.7455	0.0196	0.0395	0.0209
NBP[1]428*	0.1901	0.0254	0.7712	0.0203	0.0405	0.0214
NBP[1]454*	0.1918	0.0256	0.8318	0.0219	0.0432	0.0228
NBP[1]480*	0.1958	0.0262	0.9072	0.0239	0.0467	0.0246
NBP[1]505*	0.1905	0.0255	0.9412	0.0248	0.0480	0.0253
NBP[1]531*	0.1843	0.0246	0.9692	0.0255	0.0490	0.0258
NBP[1]557*	0.1778	0.0238	0.9945	0.0262	0.0498	0.0263
NBP[1]582*	0.1702	0.0227	1.0107	0.0266	0.0502	0.0265
NBP[1]608*	0.1640	0.0219	1.0331	0.0272	0.0509	0.0268
NBP[1]634*	0.1608	0.0215	1.0736	0.0283	0.0525	0.0277
NBP[1]659*	0.1584	0.0212	1.1179	0.0294	0.0542	0.0286
NBP[1]685*	0.1639	0.0219	1.2212	0.0321	0.0587	0.0310
NBP[1]711*	0.1713	0.0229	1.3430	0.0353	0.0641	0.0338
NBP[1]736*	0.1696	0.0227	1.3901	0.0366	0.0659	0.0347
NBP[1]762*	0.1651	0.0221	1.4200	0.0374	0.0668	0.0352
NBP[1]788*	0.1583	0.0212	1.4409	0.0379	0.0673	0.0355
NBP[1]825*	0.2652	0.0354	2.5937	0.0683	0.1200	0.0633
NBP[1]873*	0.1828	0.0244	1.9384	0.0510	0.0886	0.0467
NBP[1]926*	0.1436	0.0192	1.6452	0.0433	0.0744	0.0392
NBP[1]978*	0.1472	0.0197	1.8499	0.0487	0.0824	0.0434
NBP[1]1021*	0.0727	0.0097	0.9637	0.0254	0.0426	0.0224
NBP[1]1075*	0.0448	0.0060	0.6290	0.0166	0.0275	0.0145
NBP[1]1123*	0.0415	0.0055	0.6234	0.0164	0.0270	0.0142

* Specified by user.

Material Stream: 10 (continued)

Fluid Package: Basis-1
Property Package: Peng-Robinson

COMPOSITION

Liquid Phase (continued)

Phase Fraction 0.6879

COMPONENTS	MOLAR FLOW (kgmole/h)	MOLE FRACTION	MASS FLOW (tonne/d)	MASS FRACTION	LIQUID VOLUME FLOW (m3/h)	LIQUID VOLUME FRACTION
NBP[1]1173*	0.0296	0.0040	0.4715	0.0124	0.0202	0.0107
NBP[1]1250*	0.0368	0.0049	0.6338	0.0167	0.0269	0.0142
NBP[1]1339*	0.0203	0.0027	0.3898	0.0103	0.0162	0.0086
NBP[1]1432*	0.0006	0.0001	0.0124	0.0003	0.0005	0.0003
NBP[1]1528*	0.0000	0.0000	0.0000	0.0000	0.0000	0.0000
NBP[1]1637*	0.0000	0.0000	0.0000	0.0000	0.0000	0.0000
NBP[1]1732*	0.0000	0.0000	0.0000	0.0000	0.0000	0.0000
NBP[1]1819*	0.0000	0.0000	0.0000	0.0000	0.0000	0.0000
NBP[1]1913*	0.0000	0.0000	0.0000	0.0000	0.0000	0.0000
Total	7.4855	1.0000	37.9996	1.0000	1.8965	1.0000

Material Stream: 11

Fluid Package: Basis-1
Property Package: Peng-Robinson

CONDITIONS

		Overall	Vapour Phase	Liquid Phase	Liquid Phase
Vapour / Phase Fraction		1.0000	1.0000	0.0000	0.0000
Temperature:	(F)	172.4	172.4	172.4	172.4
Pressure:	(psig)	20.00	20.00	20.00	20.00
Molar Flow	(MMSCFD)	6.577e-002	6.577e-002	0.0000	0.0000
Mass Flow	(tonne/d)	3.009	3.009	0.0000	0.0000
Std Ideal Liq Vol Flow	(barrel/day)	38.66	38.66	0.0000	0.0000
Molar Enthalpy	(kJ/kgmole)	-1.093e+005	-1.093e+005	-1.561e+006	-4.349e+005
Molar Entropy	(kJ/kgmole-C)	192.7	192.7	1884	398.2
Heat Flow	(MMBtu/hr)	-0.3395	-0.3395	0.0000	0.0000
Liq Vol Flow @Std Cond	(barrel/day)	41.96 *	41.96	0.0000	0.0000

PROPERTIES

		Overall	Vapour Phase	Liquid Phase	Liquid Phase
Molecular Weight		38.27	38.27	764.6	211.5
Molar Density	(kgmole/m3)	8.338e-002	8.338e-002	1.257	3.730
Mass Density	(kg/m3)	3.191	3.191	961.0	789.0
Act. Volume Flow	(barrel/day)	5931	5931	0.0000	0.0000
Mass Enthalpy	(kJ/kg)	-2857	-2857	-2041	-2056
Mass Entropy	(kJ/kg-C)	5.035	5.035	2.464	1.883
Heat Capacity	(kJ/kgmole-C)	74.49	74.49	1595	454.4
Mass Heat Capacity	(kJ/kg-C)	1.947	1.947	2.086	2.148
LHV Molar Basis (Std)	(Btu/SCF)	---	---	---	---
LHV Mass Basis (Std)	(kJ/kg)	---	---	---	---
Phase Fraction [Vol. Basis]		1.000	1.000	---	---
Phase Fraction [Mass Basis]		1.000	1.000	0.0000	0.0000
Partial Pressure of CO2	(psig)	-13.48	---	---	---
Cost Based on Flow	(Cost/s)	0.0000	0.0000	0.0000	0.0000
Act. Gas Flow	(ACT_m3/h)	39.29	39.29	---	---
Avg. Liq. Density	(kgmole/m3)	12.79	12.79	1.330	3.947
Specific Heat	(kJ/kgmole-C)	74.49	74.49	1595	454.4
Std. Gas Flow	(STD_m3/h)	77.46	77.46	0.0000	0.0000
Std. Ideal Liq. Mass Density	(kg/m3)	489.5	489.5	1017	834.8
Act. Liq. Flow	(barrel/day)	0.0000	---	---	0.0000
Z Factor		---	0.9828	6.519e-002	2.197e-002
Watson K		14.63	14.63	11.99	11.85
User Property		---	---	---	---
Partial Pressure of H2S	(psig)	-14.70	---	---	---
Cp/(Cp - R)		1.126	1.126	1.005	1.019

* Specified by user.

Material Stream: 11 (continued)

Fluid Package: Basis-1
Property Package: Peng-Robinson

PROPERTIES

	Overall	Vapour Phase	Liquid Phase	Liquid Phase
Cp/Cv	1.136	1.136	1.372	1.019
Heat of Vap. (kJ/kgmole)	3.125e+004	---	---	---
Kinematic Viscosity (cSt)	3.602	3.602	421.2	1.764
Liq. Mass Density (Std. Cond) (kg/m3)	451.0	451.0	999.6	836.7
Liq. Vol. Flow (Std. Cond) (barrel/day)	41.96	41.96	0.0000	0.0000
Liquid Fraction	0.0000	0.0000	1.000	1.000
Molar Volume (m3/kgmole)	11.99	11.99	0.7956	0.2681
Mass Heat of Vap. (kJ/kg)	816.7	---	---	---
Phase Fraction [Molar Basis]	1.0000	1.0000	0.0000	0.0000
Surface Tension (dyne/cm)	---	---	23.56	20.34
Thermal Conductivity (W/m-K)	2.804e-002	2.804e-002	0.1324	0.1102
Viscosity (cP)	1.149e-002	1.149e-002	404.8	1.392
Cv (Semi-Ideal) (kJ/kgmole-C)	66.18	66.18	1586	---
Mass Cv (Semi-Ideal) (kJ/kg-C)	1.729	1.729	2.075	---
Cv (kJ/kgmole-C)	65.59	65.59	1162	---
Mass Cv (kJ/kg-C)	1.714	1.714	1.520	---
Cv (Ent. Method) (kJ/kgmole-C)	---	---	1338	---
Mass Cv (Ent. Method) (kJ/kg-C)	---	---	1.750	---
Cp/Cv (Ent. Method)	---	---	1.192	---
Reid VP at 37.8 C (psig)	706.7	706.7	-10.52	-7.854
True VP at 37.8 C (psig)	1530	1530	9.639	7.291
Liq. Vol. Flow - Sum(Std. Cond) (barrel/day)	41.96	41.96	0.0000	0.0000
HHV Molar Basis (Std) (Btu/SCF)	---	---	---	---
HHV Mass Basis (Std) (kJ/kg)	---	---	---	---
CO2 Loading	---	---	---	---
CO2 App ML Con (kgmole/m3)	---	---	---	---
CO2 App WT Con (kgmol/kg)	---	---	---	---
Phase Fraction [Act. Vol. Basis]	1.000	1.000	0.0000	0.0000
Mass Exergy (kJ/kg)	63.35	---	---	---
Viscosity Index	3.022	---	---	---
Ideal Gas Cp/Cv	1.127	1.127	1.006	1.023
Ideal Gas Cp (kJ/kgmole-C)	73.82	73.82	1366	376.4
Mass Ideal Gas Cp (kJ/kg-C)	1.929	1.929	1.787	1.780
Bubble Point Pressure (psig)	1752	---	---	---

COMPOSITION

Overall Phase

Vapour Fraction 1.0000

COMPONENTS	MOLAR FLOW (kgmole/h)	MOLE FRACTION	MASS FLOW (tonne/d)	MASS FRACTION	LIQUID VOLUME FLOW (m3/h)	LIQUID VOLUME FRACTION
Methane	1.2929	0.3947	0.4978	0.1655	0.0693	0.2705
Ethane	0.4822	0.1472	0.3480	0.1157	0.0408	0.1592
Propane	0.5005	0.1528	0.5297	0.1760	0.0436	0.1701
i-Butane	0.1000	0.0305	0.1395	0.0464	0.0103	0.0404
n-Butane	0.2174	0.0664	0.3032	0.1008	0.0217	0.0846
i-Pentane	0.0580	0.0177	0.1005	0.0334	0.0067	0.0262
n-Pentane	0.0676	0.0206	0.1170	0.0389	0.0077	0.0302
n-Hexane	0.0988	0.0302	0.2044	0.0679	0.0129	0.0502
Nitrogen	0.0185	0.0056	0.0124	0.0041	0.0006	0.0025
CO2	0.1153	0.0352	0.1217	0.0405	0.0061	0.0240
H2S	0.0000	0.0000	0.0000	0.0000	0.0000	0.0000
H2O	0.0486	0.0148	0.0210	0.0070	0.0009	0.0034
NBP[1]95*	0.0204	0.0062	0.0332	0.0110	0.0020	0.0080
NBP[1]121*	0.0243	0.0074	0.0425	0.0141	0.0026	0.0100
NBP[1]147*	0.0300	0.0092	0.0578	0.0192	0.0034	0.0134
NBP[1]171*	0.0529	0.0161	0.1113	0.0370	0.0065	0.0254
NBP[1]195*	0.0609	0.0186	0.1367	0.0454	0.0079	0.0309

* Specified by user.

Material Stream: 11 (continued)

Fluid Package: Basis-1
Property Package: Peng-Robinson

COMPOSITION

Overall Phase (continued)

Vapour Fraction 1.0000

COMPONENTS	MOLAR FLOW (kgmole/h)	MOLE FRACTION	MASS FLOW (tonne/d)	MASS FRACTION	LIQUID VOLUME FLOW (m3/h)	LIQUID VOLUME FRACTION
NBP[1]222*	0.0365	0.0111	0.0882	0.0293	0.0050	0.0197
NBP[1]248*	0.0233	0.0071	0.0605	0.0201	0.0034	0.0133
NBP[1]273*	0.0136	0.0042	0.0378	0.0126	0.0021	0.0082
NBP[1]299*	0.0073	0.0022	0.0217	0.0072	0.0012	0.0047
NBP[1]325*	0.0034	0.0010	0.0108	0.0036	0.0006	0.0023
NBP[1]351*	0.0017	0.0005	0.0057	0.0019	0.0003	0.0012
NBP[1]377*	0.0009	0.0003	0.0033	0.0011	0.0002	0.0007
NBP[1]402*	0.0005	0.0001	0.0018	0.0006	0.0001	0.0004
NBP[1]428*	0.0003	0.0001	0.0010	0.0003	0.0001	0.0002
NBP[1]454*	0.0001	0.0000	0.0006	0.0002	0.0000	0.0001
NBP[1]480*	0.0001	0.0000	0.0003	0.0001	0.0000	0.0001
NBP[1]505*	0.0000	0.0000	0.0002	0.0001	0.0000	0.0000
NBP[1]531*	0.0000	0.0000	0.0001	0.0000	0.0000	0.0000
NBP[1]557*	0.0000	0.0000	0.0000	0.0000	0.0000	0.0000
NBP[1]582*	0.0000	0.0000	0.0000	0.0000	0.0000	0.0000
NBP[1]608*	0.0000	0.0000	0.0000	0.0000	0.0000	0.0000
NBP[1]634*	0.0000	0.0000	0.0000	0.0000	0.0000	0.0000
NBP[1]659*	0.0000	0.0000	0.0000	0.0000	0.0000	0.0000
NBP[1]685*	0.0000	0.0000	0.0000	0.0000	0.0000	0.0000
NBP[1]711*	0.0000	0.0000	0.0000	0.0000	0.0000	0.0000
NBP[1]736*	0.0000	0.0000	0.0000	0.0000	0.0000	0.0000
NBP[1]762*	0.0000	0.0000	0.0000	0.0000	0.0000	0.0000
NBP[1]788*	0.0000	0.0000	0.0000	0.0000	0.0000	0.0000
NBP[1]825*	0.0000	0.0000	0.0000	0.0000	0.0000	0.0000
NBP[1]873*	0.0000	0.0000	0.0000	0.0000	0.0000	0.0000
NBP[1]926*	0.0000	0.0000	0.0000	0.0000	0.0000	0.0000
NBP[1]978*	0.0000	0.0000	0.0000	0.0000	0.0000	0.0000
NBP[1]1021*	0.0000	0.0000	0.0000	0.0000	0.0000	0.0000
NBP[1]1075*	0.0000	0.0000	0.0000	0.0000	0.0000	0.0000
NBP[1]1123*	0.0000	0.0000	0.0000	0.0000	0.0000	0.0000
NBP[1]1173*	0.0000	0.0000	0.0000	0.0000	0.0000	0.0000
NBP[1]1250*	0.0000	0.0000	0.0000	0.0000	0.0000	0.0000
NBP[1]1339*	0.0000	0.0000	0.0000	0.0000	0.0000	0.0000
NBP[1]1432*	0.0000	0.0000	0.0000	0.0000	0.0000	0.0000
NBP[1]1528*	0.0000	0.0000	0.0000	0.0000	0.0000	0.0000
NBP[1]1637*	0.0000	0.0000	0.0000	0.0000	0.0000	0.0000
NBP[1]1732*	0.0000	0.0000	0.0000	0.0000	0.0000	0.0000
NBP[1]1819*	0.0000	0.0000	0.0000	0.0000	0.0000	0.0000
NBP[1]1913*	0.0000	0.0000	0.0000	0.0000	0.0000	0.0000
Total	3.2759	1.0000	3.0086	1.0000	0.2561	1.0000

Vapour Phase

Phase Fraction 1.000

COMPONENTS	MOLAR FLOW (kgmole/h)	MOLE FRACTION	MASS FLOW (tonne/d)	MASS FRACTION	LIQUID VOLUME FLOW (m3/h)	LIQUID VOLUME FRACTION
Methane	1.2929	0.3947	0.4978	0.1655	0.0693	0.2705
Ethane	0.4822	0.1472	0.3480	0.1157	0.0408	0.1592
Propane	0.5005	0.1528	0.5297	0.1760	0.0436	0.1701
i-Butane	0.1000	0.0305	0.1395	0.0464	0.0103	0.0404
n-Butane	0.2174	0.0664	0.3032	0.1008	0.0217	0.0846
i-Pentane	0.0580	0.0177	0.1005	0.0334	0.0067	0.0262
n-Pentane	0.0676	0.0206	0.1170	0.0389	0.0077	0.0302
n-Hexane	0.0988	0.0302	0.2044	0.0679	0.0129	0.0502
Nitrogen	0.0185	0.0056	0.0124	0.0041	0.0006	0.0025
CO2	0.1153	0.0352	0.1217	0.0405	0.0061	0.0240

* Specified by user.

Material Stream: 11 (continued)

Fluid Package: Basis-1
Property Package: Peng-Robinson

COMPOSITION

Vapour Phase (continued)

Phase Fraction 1.000

COMPONENTS	MOLAR FLOW (kgmole/h)	MOLE FRACTION	MASS FLOW (tonne/d)	MASS FRACTION	LIQUID VOLUME FLOW (m3/h)	LIQUID VOLUME FRACTION
H2S	0.0000	0.0000	0.0000	0.0000	0.0000	0.0000
H2O	0.0486	0.0148	0.0210	0.0070	0.0009	0.0034
NBP[1]95*	0.0204	0.0062	0.0332	0.0110	0.0020	0.0080
NBP[1]121*	0.0243	0.0074	0.0425	0.0141	0.0026	0.0100
NBP[1]147*	0.0300	0.0092	0.0578	0.0192	0.0034	0.0134
NBP[1]171*	0.0529	0.0161	0.1113	0.0370	0.0065	0.0254
NBP[1]195*	0.0609	0.0186	0.1367	0.0454	0.0079	0.0309
NBP[1]222*	0.0365	0.0111	0.0882	0.0293	0.0050	0.0197
NBP[1]248*	0.0233	0.0071	0.0605	0.0201	0.0034	0.0133
NBP[1]273*	0.0136	0.0042	0.0378	0.0126	0.0021	0.0082
NBP[1]299*	0.0073	0.0022	0.0217	0.0072	0.0012	0.0047
NBP[1]325*	0.0034	0.0010	0.0108	0.0036	0.0006	0.0023
NBP[1]351*	0.0017	0.0005	0.0057	0.0019	0.0003	0.0012
NBP[1]377*	0.0009	0.0003	0.0033	0.0011	0.0002	0.0007
NBP[1]402*	0.0005	0.0001	0.0018	0.0006	0.0001	0.0004
NBP[1]428*	0.0003	0.0001	0.0010	0.0003	0.0001	0.0002
NBP[1]454*	0.0001	0.0000	0.0006	0.0002	0.0000	0.0001
NBP[1]480*	0.0001	0.0000	0.0003	0.0001	0.0000	0.0001
NBP[1]505*	0.0000	0.0000	0.0002	0.0001	0.0000	0.0000
NBP[1]531*	0.0000	0.0000	0.0001	0.0000	0.0000	0.0000
NBP[1]557*	0.0000	0.0000	0.0000	0.0000	0.0000	0.0000
NBP[1]582*	0.0000	0.0000	0.0000	0.0000	0.0000	0.0000
NBP[1]608*	0.0000	0.0000	0.0000	0.0000	0.0000	0.0000
NBP[1]634*	0.0000	0.0000	0.0000	0.0000	0.0000	0.0000
NBP[1]659*	0.0000	0.0000	0.0000	0.0000	0.0000	0.0000
NBP[1]685*	0.0000	0.0000	0.0000	0.0000	0.0000	0.0000
NBP[1]711*	0.0000	0.0000	0.0000	0.0000	0.0000	0.0000
NBP[1]736*	0.0000	0.0000	0.0000	0.0000	0.0000	0.0000
NBP[1]762*	0.0000	0.0000	0.0000	0.0000	0.0000	0.0000
NBP[1]788*	0.0000	0.0000	0.0000	0.0000	0.0000	0.0000
NBP[1]825*	0.0000	0.0000	0.0000	0.0000	0.0000	0.0000
NBP[1]873*	0.0000	0.0000	0.0000	0.0000	0.0000	0.0000
NBP[1]926*	0.0000	0.0000	0.0000	0.0000	0.0000	0.0000
NBP[1]978*	0.0000	0.0000	0.0000	0.0000	0.0000	0.0000
NBP[1]1021*	0.0000	0.0000	0.0000	0.0000	0.0000	0.0000
NBP[1]1075*	0.0000	0.0000	0.0000	0.0000	0.0000	0.0000
NBP[1]1123*	0.0000	0.0000	0.0000	0.0000	0.0000	0.0000
NBP[1]1173*	0.0000	0.0000	0.0000	0.0000	0.0000	0.0000
NBP[1]1250*	0.0000	0.0000	0.0000	0.0000	0.0000	0.0000
NBP[1]1339*	0.0000	0.0000	0.0000	0.0000	0.0000	0.0000
NBP[1]1432*	0.0000	0.0000	0.0000	0.0000	0.0000	0.0000
NBP[1]1528*	0.0000	0.0000	0.0000	0.0000	0.0000	0.0000
NBP[1]1637*	0.0000	0.0000	0.0000	0.0000	0.0000	0.0000
NBP[1]1732*	0.0000	0.0000	0.0000	0.0000	0.0000	0.0000
NBP[1]1819*	0.0000	0.0000	0.0000	0.0000	0.0000	0.0000
NBP[1]1913*	0.0000	0.0000	0.0000	0.0000	0.0000	0.0000
Total	3.2759	1.0000	3.0086	1.0000	0.2561	1.0000

Liquid Phase

Phase Fraction 0.0000

COMPONENTS	MOLAR FLOW (kgmole/h)	MOLE FRACTION	MASS FLOW (tonne/d)	MASS FRACTION	LIQUID VOLUME FLOW (m3/h)	LIQUID VOLUME FRACTION
Methane	0.0000	0.0048	0.0000	0.0001	0.0000	0.0003
Ethane	0.0000	0.0043	0.0000	0.0002	0.0000	0.0005
Propane	0.0000	0.0093	0.0000	0.0005	0.0000	0.0011

* Specified by user.

Material Stream: 11 (continued)

Fluid Package: Basis-1
Property Package: Peng-Robinson

COMPOSITION

Liquid Phase (continued)

Phase Fraction 0.0000

COMPONENTS	MOLAR FLOW (kgmole/h)	MOLE FRACTION	MASS FLOW (tonne/d)	MASS FRACTION	LIQUID VOLUME FLOW (m3/h)	LIQUID VOLUME FRACTION
i-Butane	0.0000	0.0034	0.0000	0.0003	0.0000	0.0005
n-Butane	0.0000	0.0086	0.0000	0.0007	0.0000	0.0011
i-Pentane	0.0000	0.0042	0.0000	0.0004	0.0000	0.0006
n-Pentane	0.0000	0.0056	0.0000	0.0005	0.0000	0.0009
n-Hexane	0.0000	0.0173	0.0000	0.0020	0.0000	0.0030
Nitrogen	0.0000	0.0000	0.0000	0.0000	0.0000	0.0000
CO2	0.0000	0.0010	0.0000	0.0001	0.0000	0.0001
H2S	0.0000	0.0000	0.0000	0.0000	0.0000	0.0000
H2O	0.0000	0.0004	0.0000	0.0000	0.0000	0.0000
NBP[1]95*	0.0000	0.0016	0.0000	0.0001	0.0000	0.0002
NBP[1]121*	0.0000	0.0026	0.0000	0.0002	0.0000	0.0004
NBP[1]147*	0.0000	0.0043	0.0000	0.0005	0.0000	0.0007
NBP[1]171*	0.0000	0.0102	0.0000	0.0012	0.0000	0.0017
NBP[1]195*	0.0000	0.0161	0.0000	0.0020	0.0000	0.0028
NBP[1]222*	0.0000	0.0144	0.0000	0.0019	0.0000	0.0026
NBP[1]248*	0.0000	0.0135	0.0000	0.0019	0.0000	0.0026
NBP[1]273*	0.0000	0.0118	0.0000	0.0018	0.0000	0.0024
NBP[1]299*	0.0000	0.0096	0.0000	0.0016	0.0000	0.0021
NBP[1]325*	0.0000	0.0071	0.0000	0.0012	0.0000	0.0016
NBP[1]351*	0.0000	0.0057	0.0000	0.0010	0.0000	0.0014
NBP[1]377*	0.0000	0.0050	0.0000	0.0010	0.0000	0.0013
NBP[1]402*	0.0000	0.0043	0.0000	0.0009	0.0000	0.0012
NBP[1]428*	0.0000	0.0039	0.0000	0.0009	0.0000	0.0011
NBP[1]454*	0.0000	0.0036	0.0000	0.0009	0.0000	0.0011
NBP[1]480*	0.0000	0.0034	0.0000	0.0009	0.0000	0.0011
NBP[1]505*	0.0000	0.0031	0.0000	0.0008	0.0000	0.0010
NBP[1]531*	0.0000	0.0027	0.0000	0.0008	0.0000	0.0010
NBP[1]557*	0.0000	0.0024	0.0000	0.0007	0.0000	0.0009
NBP[1]582*	0.0000	0.0022	0.0000	0.0007	0.0000	0.0009
NBP[1]608*	0.0000	0.0019	0.0000	0.0007	0.0000	0.0008
NBP[1]634*	0.0000	0.0018	0.0000	0.0006	0.0000	0.0008
NBP[1]659*	0.0000	0.0016	0.0000	0.0006	0.0000	0.0007
NBP[1]685*	0.0000	0.0016	0.0000	0.0006	0.0000	0.0008
NBP[1]711*	0.0000	0.0016	0.0000	0.0007	0.0000	0.0008
NBP[1]736*	0.0000	0.0015	0.0000	0.0007	0.0000	0.0008
NBP[1]762*	0.0000	0.0014	0.0000	0.0007	0.0000	0.0008
NBP[1]788*	0.0000	0.0013	0.0000	0.0007	0.0000	0.0007
NBP[1]825*	0.0000	0.0022	0.0000	0.0012	0.0000	0.0013
NBP[1]873*	0.0000	0.0016	0.0000	0.0009	0.0000	0.0010
NBP[1]926*	0.0000	0.0014	0.0000	0.0009	0.0000	0.0010
NBP[1]978*	0.0000	0.0017	0.0000	0.0012	0.0000	0.0013
NBP[1]1021*	0.0000	0.0011	0.0000	0.0008	0.0000	0.0009
NBP[1]1075*	0.0000	0.0012	0.0000	0.0009	0.0000	0.0010
NBP[1]1123*	0.0000	0.0018	0.0000	0.0015	0.0000	0.0016
NBP[1]1173*	0.0000	0.0030	0.0000	0.0026	0.0000	0.0027
NBP[1]1250*	0.0000	0.0208	0.0000	0.0195	0.0000	0.0202
NBP[1]1339*	0.0000	0.1346	0.0000	0.1411	0.0000	0.1434
NBP[1]1432*	0.0000	0.2094	0.0000	0.2399	0.0000	0.2401
NBP[1]1528*	0.0000	0.1504	0.0000	0.1857	0.0000	0.1834
NBP[1]1637*	0.0000	0.1056	0.0000	0.1386	0.0000	0.1352
NBP[1]1732*	0.0000	0.0845	0.0000	0.1167	0.0000	0.1126
NBP[1]1819*	0.0000	0.0812	0.0000	0.1178	0.0000	0.1122
NBP[1]1913*	0.0000	0.0000	0.0000	0.0000	0.0000	0.0000
Total	0.0000	1.0000	0.0000	1.0000	0.0000	1.0000

* Specified by user.

Material Stream: 11 (continued)

Fluid Package: Basis-1
Property Package: Peng-Robinson

COMPOSITION

Liquid Phase

Phase Fraction 0.0000

COMPONENTS	MOLAR FLOW (kgmole/h)	MOLE FRACTION	MASS FLOW (tonne/d)	MASS FRACTION	LIQUID VOLUME FLOW (m3/h)	LIQUID VOLUME FRACTION
Methane	0.0000	0.0035	0.0000	0.0003	0.0000	0.0007
Ethane	0.0000	0.0047	0.0000	0.0007	0.0000	0.0016
Propane	0.0000	0.0131	0.0000	0.0027	0.0000	0.0045
i-Butane	0.0000	0.0055	0.0000	0.0015	0.0000	0.0022
n-Butane	0.0000	0.0153	0.0000	0.0042	0.0000	0.0060
i-Pentane	0.0000	0.0086	0.0000	0.0029	0.0000	0.0039
n-Pentane	0.0000	0.0123	0.0000	0.0042	0.0000	0.0056
n-Hexane	0.0000	0.0454	0.0000	0.0185	0.0000	0.0233
Nitrogen	0.0000	0.0000	0.0000	0.0000	0.0000	0.0000
CO2	0.0000	0.0007	0.0000	0.0001	0.0000	0.0002
H2S	0.0000	0.0000	0.0000	0.0000	0.0000	0.0000
H2O	0.0000	0.0003	0.0000	0.0000	0.0000	0.0000
NBP[1]95*	0.0000	0.0037	0.0000	0.0012	0.0000	0.0015
NBP[1]121*	0.0000	0.0064	0.0000	0.0022	0.0000	0.0027
NBP[1]147*	0.0000	0.0116	0.0000	0.0044	0.0000	0.0053
NBP[1]171*	0.0000	0.0300	0.0000	0.0125	0.0000	0.0146
NBP[1]195*	0.0000	0.0512	0.0000	0.0227	0.0000	0.0263
NBP[1]222*	0.0000	0.0497	0.0000	0.0237	0.0000	0.0271
NBP[1]248*	0.0000	0.0507	0.0000	0.0259	0.0000	0.0293
NBP[1]273*	0.0000	0.0478	0.0000	0.0262	0.0000	0.0293
NBP[1]299*	0.0000	0.0422	0.0000	0.0246	0.0000	0.0272
NBP[1]325*	0.0000	0.0335	0.0000	0.0207	0.0000	0.0227
NBP[1]351*	0.0000	0.0290	0.0000	0.0191	0.0000	0.0207
NBP[1]377*	0.0000	0.0277	0.0000	0.0195	0.0000	0.0209
NBP[1]402*	0.0000	0.0262	0.0000	0.0196	0.0000	0.0209
NBP[1]428*	0.0000	0.0254	0.0000	0.0203	0.0000	0.0214
NBP[1]454*	0.0000	0.0256	0.0000	0.0219	0.0000	0.0228
NBP[1]480*	0.0000	0.0262	0.0000	0.0239	0.0000	0.0246
NBP[1]505*	0.0000	0.0255	0.0000	0.0248	0.0000	0.0253
NBP[1]531*	0.0000	0.0246	0.0000	0.0255	0.0000	0.0258
NBP[1]557*	0.0000	0.0238	0.0000	0.0262	0.0000	0.0263
NBP[1]582*	0.0000	0.0227	0.0000	0.0266	0.0000	0.0265
NBP[1]608*	0.0000	0.0219	0.0000	0.0272	0.0000	0.0268
NBP[1]634*	0.0000	0.0215	0.0000	0.0283	0.0000	0.0277
NBP[1]659*	0.0000	0.0212	0.0000	0.0294	0.0000	0.0286
NBP[1]685*	0.0000	0.0219	0.0000	0.0321	0.0000	0.0310
NBP[1]711*	0.0000	0.0229	0.0000	0.0353	0.0000	0.0338
NBP[1]736*	0.0000	0.0227	0.0000	0.0366	0.0000	0.0347
NBP[1]762*	0.0000	0.0221	0.0000	0.0374	0.0000	0.0352
NBP[1]788*	0.0000	0.0212	0.0000	0.0379	0.0000	0.0355
NBP[1]825*	0.0000	0.0354	0.0000	0.0683	0.0000	0.0633
NBP[1]873*	0.0000	0.0244	0.0000	0.0510	0.0000	0.0467
NBP[1]926*	0.0000	0.0192	0.0000	0.0433	0.0000	0.0392
NBP[1]978*	0.0000	0.0197	0.0000	0.0487	0.0000	0.0434
NBP[1]1021*	0.0000	0.0097	0.0000	0.0254	0.0000	0.0224
NBP[1]1075*	0.0000	0.0060	0.0000	0.0166	0.0000	0.0145
NBP[1]1123*	0.0000	0.0055	0.0000	0.0164	0.0000	0.0142
NBP[1]1173*	0.0000	0.0040	0.0000	0.0124	0.0000	0.0107
NBP[1]1250*	0.0000	0.0049	0.0000	0.0167	0.0000	0.0142
NBP[1]1339*	0.0000	0.0027	0.0000	0.0103	0.0000	0.0086
NBP[1]1432*	0.0000	0.0001	0.0000	0.0003	0.0000	0.0003
NBP[1]1528*	0.0000	0.0000	0.0000	0.0000	0.0000	0.0000
NBP[1]1637*	0.0000	0.0000	0.0000	0.0000	0.0000	0.0000
NBP[1]1732*	0.0000	0.0000	0.0000	0.0000	0.0000	0.0000

* Specified by user.

Material Stream: 11 (continued)

Fluid Package: Basis-1
Property Package: Peng-Robinson

COMPOSITION

Liquid Phase (continued)

Phase Fraction 0.0000

COMPONENTS	MOLAR FLOW (kgmole/h)	MOLE FRACTION	MASS FLOW (tonne/d)	MASS FRACTION	LIQUID VOLUME FLOW (m3/h)	LIQUID VOLUME FRACTION
NBP[1]1819*	0.0000	0.0000	0.0000	0.0000	0.0000	0.0000
NBP[1]1913*	0.0000	0.0000	0.0000	0.0000	0.0000	0.0000
Total	0.0000	1.0000	0.0000	1.0000	0.0000	1.0000

Material Stream: 12

Fluid Package: Basis-1
Property Package: Peng-Robinson

CONDITIONS

		Overall	Vapour Phase	Liquid Phase		
Vapour / Phase Fraction		1.0000	1.0000	0.0000		
Temperature:	(F)	103.0	103.0	103.0		
Pressure:	(psig)	20.00	20.00	20.00		
Molar Flow	(MMSCFD)	2.876	2.876	9.160e-013		
Mass Flow	(tonne/d)	79.20	79.20	4.068e-010		
Std Ideal Liq Vol Flow	(barrel/day)	1179	1179	2.861e-009		
Molar Enthalpy	(kJ/kgmole)	-1.314e+005	-1.314e+005	-7.877e+005		
Molar Entropy	(kJ/kgmole-C)	182.0	182.0	669.4		
Heat Flow	(MMBtu/hr)	-17.84	-17.84	-3.406e-011		
Liq Vol Flow @Std Cond	(barrel/day)	5.096e+005 *	5.096e+005	2.850e-009		

PROPERTIES

		Overall	Vapour Phase	Liquid Phase		
Molecular Weight		23.04	23.04	371.6		
Molar Density	(kgmole/m3)	9.257e-002	9.257e-002	2.371		
Mass Density	(kg/m3)	2.133	2.133	881.1		
Act. Volume Flow	(barrel/day)	2.336e+005	2.336e+005	2.904e-009		
Mass Enthalpy	(kJ/kg)	-5704	-5704	-2120		
Mass Entropy	(kJ/kg-C)	7.899	7.899	1.802		
Heat Capacity	(kJ/kgmole-C)	38.51	38.51	721.3		
Mass Heat Capacity	(kJ/kg-C)	1.672	1.672	1.941		
LHV Molar Basis (Std)	(Btu/SCF)	---	---	---		
LHV Mass Basis (Std)	(kJ/kg)	---	---	---		
Phase Fraction [Vol. Basis]		1.000	1.000	2.427e-012		
Phase Fraction [Mass Basis]		1.000	1.000	5.137e-012		
Partial Pressure of CO2	(psig)	-8.223	---	---		
Cost Based on Flow	(Cost/s)	0.0000	0.0000	0.0000		
Act. Gas Flow	(ACT_m3/h)	1547	1547	---		
Avg. Liq. Density	(kgmole/m3)	18.34	18.34	2.407		
Specific Heat	(kJ/kgmole-C)	38.51	38.51	721.3		
Std. Gas Flow	(STD_m3/h)	3387	3387	1.079e-009		
Std. Ideal Liq. Mass Density	(kg/m3)	422.6	422.6	894.5		
Act. Liq. Flow	(barrel/day)	---	---	---		
Z Factor		---	0.9942	3.881e-002		
Watson K		14.58	14.58	11.98		
User Property		---	---	---		
Partial Pressure of H2S	(psig)	-14.70	---	---		
Cp/(Cp - R)		1.275	1.275	1.012		
Cp/Cv		1.285	1.285	1.165		
Heat of Vap.	(kJ/kgmole)	1.692e+004	---	---		
Kinematic Viscosity	(cSt)	5.950	5.950	16.33		
Liq. Mass Density (Std. Cond)	(kg/m3)	0.9775	0.9775	897.8		
Liq. Vol. Flow (Std. Cond)	(barrel/day)	5.096e+005	5.096e+005	2.850e-009		
Liquid Fraction		0.0000	0.0000	1.000		
Molar Volume	(m3/kgmole)	10.80	10.80	0.4217		

* Specified by user.

Material Stream: 12 (continued)

Fluid Package: Basis-1
Property Package: Peng-Robinson

PROPERTIES

	Overall	Vapour Phase	Liquid Phase
Mass Heat of Vap. (kJ/kg)	734.3	---	---
Phase Fraction [Molar Basis]	1.0000	1.0000	0.0000
Surface Tension (dyne/cm)	---	---	28.50
Thermal Conductivity (W/m-K)	3.035e-002	3.035e-002	0.1268
Viscosity (cP)	1.269e-002	1.269e-002	14.39
Cv (Semi-Ideal) (kJ/kgmole-C)	30.20	30.20	713.0
Mass Cv (Semi-Ideal) (kJ/kg-C)	1.311	1.311	1.919
Cv (kJ/kgmole-C)	29.97	29.97	619.3
Mass Cv (kJ/kg-C)	1.301	1.301	1.667
Cv (Ent. Method) (kJ/kgmole-C)	---	---	600.8
Mass Cv (Ent. Method) (kJ/kg-C)	---	---	1.617
Cp/Cv (Ent. Method)	---	---	1.200
Reid VP at 37.8 C (psig)	---	---	-11.58
True VP at 37.8 C (psig)	592.7	591.7	19.61
Liq. Vol. Flow - Sum(Std. Cond) (barrel/day)	5.096e+005	5.096e+005	0.0000
HHV Molar Basis (Std) (Btu/SCF)	---	---	---
HHV Mass Basis (Std) (kJ/kg)	---	---	---
CO2 Loading	---	---	---
CO2 App ML Con (kgmole/m3)	---	---	1.289e-002
CO2 App WT Con (kgmol/kg)	---	---	1.463e-005
Phase Fraction [Act. Vol. Basis]	1.000	1.000	1.243e-014
Mass Exergy (kJ/kg)	92.58	---	---
Viscosity Index	-8.961	---	---
Ideal Gas Cp/Cv	1.278	1.278	1.014
Ideal Gas Cp (kJ/kgmole-C)	38.25	38.25	592.6
Mass Ideal Gas Cp (kJ/kg-C)	1.660	1.660	1.595
Bubble Point Pressure (psig)	519.8	---	---

COMPOSITION

Overall Phase

Vapour Fraction 1.0000

COMPONENTS	MOLAR FLOW (kgmole/h)	MOLE FRACTION	MASS FLOW (tonne/d)	MASS FRACTION	LIQUID VOLUME FLOW (m3/h)	LIQUID VOLUME FRACTION
Methane	101.7408	0.7103	39.1732	0.4946	5.4517	0.6981
Ethane	5.7157	0.0399	4.1249	0.0521	0.4832	0.0619
Propane	0.8668	0.0061	0.9174	0.0116	0.0754	0.0097
i-Butane	0.1209	0.0008	0.1687	0.0021	0.0125	0.0016
n-Butane	0.2383	0.0017	0.3324	0.0042	0.0238	0.0030
i-Pentane	0.0685	0.0005	0.1186	0.0015	0.0079	0.0010
n-Pentane	0.0676	0.0005	0.1170	0.0015	0.0077	0.0010
n-Hexane	0.3082	0.0022	0.6374	0.0080	0.0401	0.0051
Nitrogen	7.0597	0.0493	4.7463	0.0599	0.2452	0.0314
CO2	26.7225	0.1866	28.2251	0.3564	1.4249	0.1825
H2S	0.0000	0.0000	0.0000	0.0000	0.0000	0.0000
H2O	0.0486	0.0003	0.0210	0.0003	0.0009	0.0001
NBP[1]95*	0.0204	0.0001	0.0332	0.0004	0.0020	0.0003
NBP[1]121*	0.0243	0.0002	0.0425	0.0005	0.0026	0.0003
NBP[1]147*	0.0300	0.0002	0.0578	0.0007	0.0034	0.0004
NBP[1]171*	0.0529	0.0004	0.1113	0.0014	0.0065	0.0008
NBP[1]195*	0.0609	0.0004	0.1367	0.0017	0.0079	0.0010
NBP[1]222*	0.0365	0.0003	0.0882	0.0011	0.0050	0.0006
NBP[1]248*	0.0233	0.0002	0.0605	0.0008	0.0034	0.0004
NBP[1]273*	0.0136	0.0001	0.0378	0.0005	0.0021	0.0003
NBP[1]299*	0.0073	0.0001	0.0217	0.0003	0.0012	0.0002
NBP[1]325*	0.0034	0.0000	0.0108	0.0001	0.0006	0.0001
NBP[1]351*	0.0017	0.0000	0.0057	0.0001	0.0003	0.0000
NBP[1]377*	0.0009	0.0000	0.0033	0.0000	0.0002	0.0000

* Specified by user.

Material Stream: 12 (continued)

Fluid Package: Basis-1
Property Package: Peng-Robinson

COMPOSITION

Overall Phase (continued)

Vapour Fraction 1.0000

COMPONENTS	MOLAR FLOW (kgmole/h)	MOLE FRACTION	MASS FLOW (tonne/d)	MASS FRACTION	LIQUID VOLUME FLOW (m3/h)	LIQUID VOLUME FRACTION
NBP[1]402*	0.0005	0.0000	0.0018	0.0000	0.0001	0.0000
NBP[1]428*	0.0003	0.0000	0.0010	0.0000	0.0001	0.0000
NBP[1]454*	0.0001	0.0000	0.0006	0.0000	0.0000	0.0000
NBP[1]480*	0.0001	0.0000	0.0003	0.0000	0.0000	0.0000
NBP[1]505*	0.0000	0.0000	0.0002	0.0000	0.0000	0.0000
NBP[1]531*	0.0000	0.0000	0.0001	0.0000	0.0000	0.0000
NBP[1]557*	0.0000	0.0000	0.0000	0.0000	0.0000	0.0000
NBP[1]582*	0.0000	0.0000	0.0000	0.0000	0.0000	0.0000
NBP[1]608*	0.0000	0.0000	0.0000	0.0000	0.0000	0.0000
NBP[1]634*	0.0000	0.0000	0.0000	0.0000	0.0000	0.0000
NBP[1]659*	0.0000	0.0000	0.0000	0.0000	0.0000	0.0000
NBP[1]685*	0.0000	0.0000	0.0000	0.0000	0.0000	0.0000
NBP[1]711*	0.0000	0.0000	0.0000	0.0000	0.0000	0.0000
NBP[1]736*	0.0000	0.0000	0.0000	0.0000	0.0000	0.0000
NBP[1]762*	0.0000	0.0000	0.0000	0.0000	0.0000	0.0000
NBP[1]788*	0.0000	0.0000	0.0000	0.0000	0.0000	0.0000
NBP[1]825*	0.0000	0.0000	0.0000	0.0000	0.0000	0.0000
NBP[1]873*	0.0000	0.0000	0.0000	0.0000	0.0000	0.0000
NBP[1]926*	0.0000	0.0000	0.0000	0.0000	0.0000	0.0000
NBP[1]978*	0.0000	0.0000	0.0000	0.0000	0.0000	0.0000
NBP[1]1021*	0.0000	0.0000	0.0000	0.0000	0.0000	0.0000
NBP[1]1075*	0.0000	0.0000	0.0000	0.0000	0.0000	0.0000
NBP[1]1123*	0.0000	0.0000	0.0000	0.0000	0.0000	0.0000
NBP[1]1173*	0.0000	0.0000	0.0000	0.0000	0.0000	0.0000
NBP[1]1250*	0.0000	0.0000	0.0000	0.0000	0.0000	0.0000
NBP[1]1339*	0.0000	0.0000	0.0000	0.0000	0.0000	0.0000
NBP[1]1432*	0.0000	0.0000	0.0000	0.0000	0.0000	0.0000
NBP[1]1528*	0.0000	0.0000	0.0000	0.0000	0.0000	0.0000
NBP[1]1637*	0.0000	0.0000	0.0000	0.0000	0.0000	0.0000
NBP[1]1732*	0.0000	0.0000	0.0000	0.0000	0.0000	0.0000
NBP[1]1819*	0.0000	0.0000	0.0000	0.0000	0.0000	0.0000
NBP[1]1913*	0.0000	0.0000	0.0000	0.0000	0.0000	0.0000
Total	143.2338	1.0000	79.1955	1.0000	7.8090	1.0000

Vapour Phase

Phase Fraction 1.000

COMPONENTS	MOLAR FLOW (kgmole/h)	MOLE FRACTION	MASS FLOW (tonne/d)	MASS FRACTION	LIQUID VOLUME FLOW (m3/h)	LIQUID VOLUME FRACTION
Methane	101.7408	0.7103	39.1732	0.4946	5.4517	0.6981
Ethane	5.7157	0.0399	4.1249	0.0521	0.4832	0.0619
Propane	0.8668	0.0061	0.9174	0.0116	0.0754	0.0097
i-Butane	0.1209	0.0008	0.1687	0.0021	0.0125	0.0016
n-Butane	0.2383	0.0017	0.3324	0.0042	0.0238	0.0030
i-Pentane	0.0685	0.0005	0.1186	0.0015	0.0079	0.0010
n-Pentane	0.0676	0.0005	0.1170	0.0015	0.0077	0.0010
n-Hexane	0.3082	0.0022	0.6374	0.0080	0.0401	0.0051
Nitrogen	7.0597	0.0493	4.7463	0.0599	0.2452	0.0314
CO2	26.7225	0.1866	28.2251	0.3564	1.4249	0.1825
H2S	0.0000	0.0000	0.0000	0.0000	0.0000	0.0000
H2O	0.0486	0.0003	0.0210	0.0003	0.0009	0.0001
NBP[1]95*	0.0204	0.0001	0.0332	0.0004	0.0020	0.0003
NBP[1]121*	0.0243	0.0002	0.0425	0.0005	0.0026	0.0003
NBP[1]147*	0.0300	0.0002	0.0578	0.0007	0.0034	0.0004
NBP[1]171*	0.0529	0.0004	0.1113	0.0014	0.0065	0.0008
NBP[1]195*	0.0609	0.0004	0.1367	0.0017	0.0079	0.0010

Licensed to: PETROCHEMICAL ENGINEERIN
* Specified by user.

Material Stream: 12 (continued)

Fluid Package: Basis-1
Property Package: Peng-Robinson

COMPOSITION

Vapour Phase (continued)

Phase Fraction 1.000

COMPONENTS	MOLAR FLOW (kgmole/h)	MOLE FRACTION	MASS FLOW (tonne/d)	MASS FRACTION	LIQUID VOLUME FLOW (m3/h)	LIQUID VOLUME FRACTION
NBP[1]222*	0.0365	0.0003	0.0882	0.0011	0.0050	0.0006
NBP[1]248*	0.0233	0.0002	0.0605	0.0008	0.0034	0.0004
NBP[1]273*	0.0136	0.0001	0.0378	0.0005	0.0021	0.0003
NBP[1]299*	0.0073	0.0001	0.0217	0.0003	0.0012	0.0002
NBP[1]325*	0.0034	0.0000	0.0108	0.0001	0.0006	0.0001
NBP[1]351*	0.0017	0.0000	0.0057	0.0001	0.0003	0.0000
NBP[1]377*	0.0009	0.0000	0.0033	0.0000	0.0002	0.0000
NBP[1]402*	0.0005	0.0000	0.0018	0.0000	0.0001	0.0000
NBP[1]428*	0.0003	0.0000	0.0010	0.0000	0.0001	0.0000
NBP[1]454*	0.0001	0.0000	0.0006	0.0000	0.0000	0.0000
NBP[1]480*	0.0001	0.0000	0.0003	0.0000	0.0000	0.0000
NBP[1]505*	0.0000	0.0000	0.0002	0.0000	0.0000	0.0000
NBP[1]531*	0.0000	0.0000	0.0001	0.0000	0.0000	0.0000
NBP[1]557*	0.0000	0.0000	0.0000	0.0000	0.0000	0.0000
NBP[1]582*	0.0000	0.0000	0.0000	0.0000	0.0000	0.0000
NBP[1]608*	0.0000	0.0000	0.0000	0.0000	0.0000	0.0000
NBP[1]634*	0.0000	0.0000	0.0000	0.0000	0.0000	0.0000
NBP[1]659*	0.0000	0.0000	0.0000	0.0000	0.0000	0.0000
NBP[1]685*	0.0000	0.0000	0.0000	0.0000	0.0000	0.0000
NBP[1]711*	0.0000	0.0000	0.0000	0.0000	0.0000	0.0000
NBP[1]736*	0.0000	0.0000	0.0000	0.0000	0.0000	0.0000
NBP[1]762*	0.0000	0.0000	0.0000	0.0000	0.0000	0.0000
NBP[1]788*	0.0000	0.0000	0.0000	0.0000	0.0000	0.0000
NBP[1]825*	0.0000	0.0000	0.0000	0.0000	0.0000	0.0000
NBP[1]873*	0.0000	0.0000	0.0000	0.0000	0.0000	0.0000
NBP[1]926*	0.0000	0.0000	0.0000	0.0000	0.0000	0.0000
NBP[1]978*	0.0000	0.0000	0.0000	0.0000	0.0000	0.0000
NBP[1]1021*	0.0000	0.0000	0.0000	0.0000	0.0000	0.0000
NBP[1]1075*	0.0000	0.0000	0.0000	0.0000	0.0000	0.0000
NBP[1]1123*	0.0000	0.0000	0.0000	0.0000	0.0000	0.0000
NBP[1]1173*	0.0000	0.0000	0.0000	0.0000	0.0000	0.0000
NBP[1]1250*	0.0000	0.0000	0.0000	0.0000	0.0000	0.0000
NBP[1]1339*	0.0000	0.0000	0.0000	0.0000	0.0000	0.0000
NBP[1]1432*	0.0000	0.0000	0.0000	0.0000	0.0000	0.0000
NBP[1]1528*	0.0000	0.0000	0.0000	0.0000	0.0000	0.0000
NBP[1]1637*	0.0000	0.0000	0.0000	0.0000	0.0000	0.0000
NBP[1]1732*	0.0000	0.0000	0.0000	0.0000	0.0000	0.0000
NBP[1]1819*	0.0000	0.0000	0.0000	0.0000	0.0000	0.0000
NBP[1]1913*	0.0000	0.0000	0.0000	0.0000	0.0000	0.0000
Total	143.2338	1.0000	79.1955	1.0000	7.8090	1.0000

Liquid Phase

Phase Fraction 3.185e-013

COMPONENTS	MOLAR FLOW (kgmole/h)	MOLE FRACTION	MASS FLOW (tonne/d)	MASS FRACTION	LIQUID VOLUME FLOW (m3/h)	LIQUID VOLUME FRACTION
Methane	0.0000	0.0069	0.0000	0.0003	0.0000	0.0009
Ethane	0.0000	0.0017	0.0000	0.0001	0.0000	0.0004
Propane	0.0000	0.0008	0.0000	0.0001	0.0000	0.0002
i-Butane	0.0000	0.0003	0.0000	0.0000	0.0000	0.0001
n-Butane	0.0000	0.0008	0.0000	0.0001	0.0000	0.0002
i-Pentane	0.0000	0.0005	0.0000	0.0001	0.0000	0.0001
n-Pentane	0.0000	0.0007	0.0000	0.0001	0.0000	0.0002
n-Hexane	0.0000	0.0095	0.0000	0.0022	0.0000	0.0030
Nitrogen	0.0000	0.0002	0.0000	0.0000	0.0000	0.0000
CO2	0.0000	0.0054	0.0000	0.0006	0.0000	0.0007

* Specified by user.

Material Stream: 12 (continued)

Fluid Package: Basis-1
Property Package: Peng-Robinson

COMPOSITION

Liquid Phase (continued)

Phase Fraction 3.185e-013

COMPONENTS	MOLAR FLOW (kgmole/h)	MOLE FRACTION	MASS FLOW (tonne/d)	MASS FRACTION	LIQUID VOLUME FLOW (m3/h)	LIQUID VOLUME FRACTION
H2S	0.0000	0.0000	0.0000	0.0000	0.0000	0.0000
H2O	0.0000	0.0000	0.0000	0.0000	0.0000	0.0000
NBP[1]95*	0.0000	0.0002	0.0000	0.0000	0.0000	0.0000
NBP[1]121*	0.0000	0.0004	0.0000	0.0001	0.0000	0.0001
NBP[1]147*	0.0000	0.0007	0.0000	0.0002	0.0000	0.0002
NBP[1]171*	0.0000	0.0021	0.0000	0.0005	0.0000	0.0006
NBP[1]195*	0.0000	0.0038	0.0000	0.0010	0.0000	0.0012
NBP[1]222*	0.0000	0.0041	0.0000	0.0011	0.0000	0.0014
NBP[1]248*	0.0000	0.0047	0.0000	0.0014	0.0000	0.0016
NBP[1]273*	0.0000	0.0049	0.0000	0.0015	0.0000	0.0018
NBP[1]299*	0.0000	0.0048	0.0000	0.0016	0.0000	0.0019
NBP[1]325*	0.0000	0.0043	0.0000	0.0015	0.0000	0.0018
NBP[1]351*	0.0000	0.0042	0.0000	0.0016	0.0000	0.0019
NBP[1]377*	0.0000	0.0047	0.0000	0.0019	0.0000	0.0021
NBP[1]402*	0.0000	0.0051	0.0000	0.0022	0.0000	0.0025
NBP[1]428*	0.0000	0.0057	0.0000	0.0026	0.0000	0.0029
NBP[1]454*	0.0000	0.0067	0.0000	0.0032	0.0000	0.0036
NBP[1]480*	0.0000	0.0080	0.0000	0.0041	0.0000	0.0046
NBP[1]505*	0.0000	0.0091	0.0000	0.0051	0.0000	0.0055
NBP[1]531*	0.0000	0.0105	0.0000	0.0062	0.0000	0.0067
NBP[1]557*	0.0000	0.0121	0.0000	0.0076	0.0000	0.0082
NBP[1]582*	0.0000	0.0140	0.0000	0.0093	0.0000	0.0099
NBP[1]608*	0.0000	0.0163	0.0000	0.0115	0.0000	0.0122
NBP[1]634*	0.0000	0.0196	0.0000	0.0147	0.0000	0.0154
NBP[1]659*	0.0000	0.0238	0.0000	0.0189	0.0000	0.0196
NBP[1]685*	0.0000	0.0307	0.0000	0.0257	0.0000	0.0265
NBP[1]711*	0.0000	0.0402	0.0000	0.0353	0.0000	0.0362
NBP[1]736*	0.0000	0.0498	0.0000	0.0458	0.0000	0.0465
NBP[1]762*	0.0000	0.0613	0.0000	0.0591	0.0000	0.0597
NBP[1]788*	0.0000	0.0745	0.0000	0.0761	0.0000	0.0763
NBP[1]825*	0.0000	0.1772	0.0000	0.1944	0.0000	0.1930
NBP[1]873*	0.0000	0.1876	0.0000	0.2231	0.0000	0.2190
NBP[1]926*	0.0000	0.1434	0.0000	0.1843	0.0000	0.1788
NBP[1]978*	0.0000	0.0352	0.0000	0.0496	0.0000	0.0474
NBP[1]1021*	0.0000	0.0033	0.0000	0.0049	0.0000	0.0047
NBP[1]1075*	0.0000	0.0002	0.0000	0.0004	0.0000	0.0004
NBP[1]1123*	0.0000	0.0000	0.0000	0.0001	0.0000	0.0001
NBP[1]1173*	0.0000	0.0000	0.0000	0.0000	0.0000	0.0000
NBP[1]1250*	0.0000	0.0000	0.0000	0.0000	0.0000	0.0000
NBP[1]1339*	0.0000	0.0000	0.0000	0.0000	0.0000	0.0000
NBP[1]1432*	0.0000	0.0000	0.0000	0.0000	0.0000	0.0000
NBP[1]1528*	0.0000	0.0000	0.0000	0.0000	0.0000	0.0000
NBP[1]1637*	0.0000	0.0000	0.0000	0.0000	0.0000	0.0000
NBP[1]1732*	0.0000	0.0000	0.0000	0.0000	0.0000	0.0000
NBP[1]1819*	0.0000	0.0000	0.0000	0.0000	0.0000	0.0000
NBP[1]1913*	0.0000	0.0000	0.0000	0.0000	0.0000	0.0000
Total	0.0000	1.0000	0.0000	1.0000	0.0000	1.0000

Material Stream: 13

Fluid Package: Basis-1
Property Package: Peng-Robinson

CONDITIONS

	Overall	Vapour Phase	Liquid Phase	Liquid Phase	
Vapour / Phase Fraction	0.0000	0.0000	0.0158	0.9842	

* Specified by user.

Material Stream: 13 (continued)

Fluid Package: Basis-1
Property Package: Peng-Robinson

CONDITIONS

		Overall	Vapour Phase	Liquid Phase	Liquid Phase
Temperature:	(F)	172.4	172.4	172.4	172.4
Pressure:	(psig)	20.00	20.00	20.00	20.00
Molar Flow	(MMSCFD)	0.1527	0.0000	2.405e-003	0.1503
Mass Flow	(tonne/d)	40.20	0.0000	2.198	38.00
Std Ideal Liq Vol Flow	(barrel/day)	299.9	0.0000	13.60	286.3
Molar Enthalpy	(kJ/kgmole)	-4.527e+005	-1.093e+005	-1.561e+006	-4.349e+005
Molar Entropy	(kJ/kgmole-C)	421.6	192.7	1884	398.2
Heat Flow	(MMBtu/hr)	-3.263	0.0000	-0.1772	-3.086
Liq Vol Flow @Std Cond	(barrel/day)	299.9 *	0.0000	13.83	285.7

PROPERTIES

		Overall	Vapour Phase	Liquid Phase	Liquid Phase
Molecular Weight		220.2	38.27	764.6	211.5
Molar Density	(kgmole/m3)	3.618	8.338e-002	1.257	3.730
Mass Density	(kg/m3)	796.8	3.191	961.0	789.0
Act. Volume Flow	(barrel/day)	317.3	0.0000	14.39	302.9
Mass Enthalpy	(kJ/kg)	-2055	-2857	-2041	-2056
Mass Entropy	(kJ/kg-C)	1.915	5.035	2.464	1.883
Heat Capacity	(kJ/kgmole-C)	472.4	74.49	1595	454.4
Mass Heat Capacity	(kJ/kg-C)	2.145	1.947	2.086	2.148
LHV Molar Basis (Std)	(Btu/SCF)	---	---	---	---
LHV Mass Basis (Std)	(kJ/kg)	---	---	---	---
Phase Fraction [Vol. Basis]		---	---	4.534e-002	0.9547
Phase Fraction [Mass Basis]		0.0000	0.0000	5.469e-002	0.9453
Partial Pressure of CO2	(psig)	-14.70	---	---	---
Cost Based on Flow	(Cost/s)	0.0000	0.0000	0.0000	0.0000
Act. Gas Flow	(ACT_m3/h)	---	---	---	---
Avg. Liq. Density	(kgmole/m3)	3.828	12.79	1.330	3.947
Specific Heat	(kJ/kgmole-C)	472.4	74.49	1595	454.4
Std. Gas Flow	(STD_m3/h)	179.8	0.0000	2.833	177.0
Std. Ideal Liq. Mass Density	(kg/m3)	843.1	489.5	1017	834.8
Act. Liq. Flow	(barrel/day)	317.3	---	14.39	302.9
Z Factor		---	0.9828	6.519e-002	2.197e-002
Watson K		11.83	14.63	11.99	11.85
User Property		---	---	---	---
Partial Pressure of H2S	(psig)	-14.70	---	---	---
Cp/(Cp - R)		1.018	1.126	1.005	1.019
Cp/Cv		1.018	1.136	1.372	1.019
Heat of Vap.	(kJ/kgmole)	4.334e+005	---	---	---
Kinematic Viscosity	(cSt)	1.898	3.602	421.2	1.764
Liq. Mass Density (Std. Cond)	(kg/m3)	843.1	451.0	999.6	836.7
Liq. Vol. Flow (Std. Cond)	(barrel/day)	299.9	0.0000	13.83	285.7
Liquid Fraction		1.000	0.0000	1.000	1.000
Molar Volume	(m3/kgmole)	0.2764	11.99	0.7956	0.2681
Mass Heat of Vap.	(kJ/kg)	1968	---	---	---
Phase Fraction [Molar Basis]		0.0000	0.0000	0.0158	0.9842
Surface Tension	(dyne/cm)	---	---	23.56	20.34
Thermal Conductivity	(W/m-K)	0.1111	2.804e-002	0.1324	0.1102
Viscosity	(cP)	1.898	1.149e-002	404.8	1.392
Cv (Semi-Ideal)	(kJ/kgmole-C)	464.1	66.18	1586	---
Mass Cv (Semi-Ideal)	(kJ/kg-C)	2.107	1.729	2.075	---
Cv	(kJ/kgmole-C)	464.1	65.59	1162	---
Mass Cv	(kJ/kg-C)	2.107	1.714	1.520	---
Cv (Ent. Method)	(kJ/kgmole-C)	---	---	1338	---
Mass Cv (Ent. Method)	(kJ/kg-C)	---	---	1.750	---
Cp/Cv (Ent. Method)		---	---	1.192	---
Reid VP at 37.8 C	(psig)	-7.942	706.7	-10.52	-7.854

* Specified by user.

Material Stream: 13 (continued)

Fluid Package: Basis-1
Property Package: Peng-Robinson

PROPERTIES

		Overall	Vapour Phase	Liquid Phase	Liquid Phase
True VP at 37.8 C	(psig)	6.818	1530	9.639	7.291
Liq. Vol. Flow - Sum(Std. Cond)	(barrel/day)	13.83	0.0000	13.83	0.0000
HHV Molar Basis (Std)	(Btu/SCF)	---	---	---	---
HHV Mass Basis (Std)	(kJ/kg)	---	---	---	---
CO2 Loading		---	---	---	---
CO2 App ML Con	(kgmole/m3)	2.609e-003	---	1.207e-003	2.676e-003
CO2 App WT Con	(kgmol/kg)	3.275e-006	---	1.256e-006	3.392e-006
Phase Fraction [Act. Vol. Basis]		0.0000	0.0000	4.534e-002	0.9547
Mass Exergy	(kJ/kg)	8.958	---	---	---
Viscosity Index		11.54	---	---	---
Ideal Gas Cp/Cv		1.022	1.127	1.006	1.023
Ideal Gas Cp	(kJ/kgmole-C)	392.0	73.82	1366	376.4
Mass Ideal Gas Cp	(kJ/kg-C)	1.780	1.929	1.787	1.780
Bubble Point Pressure	(psig)	19.36	---	---	---

COMPOSITION

Overall Phase

Vapour Fraction 0.0000

COMPONENTS	MOLAR FLOW (kgmole/h)	MOLE FRACTION	MASS FLOW (tonne/d)	MASS FRACTION	LIQUID VOLUME FLOW (m3/h)	LIQUID VOLUME FRACTION
Methane	0.0271	0.0036	0.0104	0.0003	0.0015	0.0007
Ethane	0.0360	0.0047	0.0260	0.0006	0.0030	0.0015
Propane	0.0993	0.0131	0.1051	0.0026	0.0086	0.0044
i-Butane	0.0416	0.0055	0.0581	0.0014	0.0043	0.0022
n-Butane	0.1157	0.0152	0.1613	0.0040	0.0115	0.0058
i-Pentane	0.0652	0.0086	0.1129	0.0028	0.0075	0.0038
n-Pentane	0.0926	0.0122	0.1604	0.0040	0.0106	0.0053
n-Hexane	0.3421	0.0450	0.7076	0.0176	0.0445	0.0224
Nitrogen	0.0002	0.0000	0.0001	0.0000	0.0000	0.0000
CO2	0.0055	0.0007	0.0058	0.0001	0.0003	0.0001
H2S	0.0000	0.0000	0.0000	0.0000	0.0000	0.0000
H2O	0.0025	0.0003	0.0011	0.0000	0.0000	0.0000
NBP[1]95*	0.0280	0.0037	0.0456	0.0011	0.0028	0.0014
NBP[1]121*	0.0481	0.0063	0.0841	0.0021	0.0051	0.0026
NBP[1]147*	0.0877	0.0115	0.1688	0.0042	0.0100	0.0051
NBP[1]171*	0.2262	0.0297	0.4759	0.0118	0.0279	0.0140
NBP[1]195*	0.3855	0.0507	0.8658	0.0215	0.0501	0.0252
NBP[1]222*	0.3739	0.0492	0.9030	0.0225	0.0516	0.0260
NBP[1]248*	0.3809	0.0501	0.9893	0.0246	0.0559	0.0281
NBP[1]273*	0.3595	0.0473	0.9984	0.0248	0.0557	0.0281
NBP[1]299*	0.3170	0.0417	0.9387	0.0234	0.0518	0.0261
NBP[1]325*	0.2515	0.0331	0.7910	0.0197	0.0433	0.0218
NBP[1]351*	0.2176	0.0286	0.7276	0.0181	0.0394	0.0198
NBP[1]377*	0.2082	0.0274	0.7425	0.0185	0.0398	0.0200
NBP[1]402*	0.1966	0.0258	0.7475	0.0186	0.0397	0.0200
NBP[1]428*	0.1905	0.0251	0.7730	0.0192	0.0406	0.0204
NBP[1]454*	0.1923	0.0253	0.8337	0.0207	0.0433	0.0218
NBP[1]480*	0.1962	0.0258	0.9091	0.0226	0.0468	0.0236
NBP[1]505*	0.1909	0.0251	0.9430	0.0235	0.0481	0.0242
NBP[1]531*	0.1846	0.0243	0.9709	0.0242	0.0491	0.0247
NBP[1]557*	0.1781	0.0234	0.9961	0.0248	0.0499	0.0251
NBP[1]582*	0.1704	0.0224	1.0123	0.0252	0.0503	0.0253
NBP[1]608*	0.1642	0.0216	1.0346	0.0257	0.0510	0.0257
NBP[1]634*	0.1611	0.0212	1.0751	0.0267	0.0525	0.0264
NBP[1]659*	0.1586	0.0209	1.1193	0.0278	0.0543	0.0273
NBP[1]685*	0.1641	0.0216	1.2227	0.0304	0.0588	0.0296
NBP[1]711*	0.1715	0.0226	1.3444	0.0334	0.0642	0.0323

* Specified by user.

Material Stream: 13 (continued)

Fluid Package: Basis-1
Property Package: Peng-Robinson

COMPOSITION

Overall Phase (continued)

Vapour Fraction 0.0000

COMPONENTS	MOLAR FLOW (kgmole/h)	MOLE FRACTION	MASS FLOW (tonne/d)	MASS FRACTION	LIQUID VOLUME FLOW (m3/h)	LIQUID VOLUME FRACTION
NBP[1]736*	0.1697	0.0223	1.3915	0.0346	0.0659	0.0332
NBP[1]762*	0.1653	0.0217	1.4214	0.0354	0.0669	0.0337
NBP[1]788*	0.1585	0.0208	1.4424	0.0359	0.0674	0.0339
NBP[1]825*	0.2655	0.0349	2.5963	0.0646	0.1201	0.0605
NBP[1]873*	0.1830	0.0241	1.9404	0.0483	0.0887	0.0447
NBP[1]926*	0.1437	0.0189	1.6472	0.0410	0.0744	0.0375
NBP[1]978*	0.1474	0.0194	1.8524	0.0461	0.0825	0.0415
NBP[1]1021*	0.0728	0.0096	0.9655	0.0240	0.0426	0.0215
NBP[1]1075*	0.0449	0.0059	0.6310	0.0157	0.0276	0.0139
NBP[1]1123*	0.0417	0.0055	0.6267	0.0156	0.0271	0.0137
NBP[1]1173*	0.0300	0.0039	0.4772	0.0119	0.0205	0.0103
NBP[1]1250*	0.0393	0.0052	0.6767	0.0168	0.0287	0.0144
NBP[1]1339*	0.0364	0.0048	0.6999	0.0174	0.0291	0.0147
NBP[1]1432*	0.0257	0.0034	0.5397	0.0134	0.0221	0.0111
NBP[1]1528*	0.0180	0.0024	0.4082	0.0102	0.0165	0.0083
NBP[1]1637*	0.0127	0.0017	0.3047	0.0076	0.0122	0.0061
NBP[1]1732*	0.0101	0.0013	0.2565	0.0064	0.0101	0.0051
NBP[1]1819*	0.0097	0.0013	0.2589	0.0064	0.0101	0.0051
NBP[1]1913*	0.0000	0.0000	0.0001	0.0000	0.0000	0.0000
Total	7.6053	1.0000	40.1979	1.0000	1.9866	1.0000

Vapour Phase

Phase Fraction 0.0000

COMPONENTS	MOLAR FLOW (kgmole/h)	MOLE FRACTION	MASS FLOW (tonne/d)	MASS FRACTION	LIQUID VOLUME FLOW (m3/h)	LIQUID VOLUME FRACTION
Methane	0.0000	0.3947	0.0000	0.1655	0.0000	0.2705
Ethane	0.0000	0.1472	0.0000	0.1157	0.0000	0.1592
Propane	0.0000	0.1528	0.0000	0.1760	0.0000	0.1701
i-Butane	0.0000	0.0305	0.0000	0.0464	0.0000	0.0404
n-Butane	0.0000	0.0664	0.0000	0.1008	0.0000	0.0846
i-Pentane	0.0000	0.0177	0.0000	0.0334	0.0000	0.0262
n-Pentane	0.0000	0.0206	0.0000	0.0389	0.0000	0.0302
n-Hexane	0.0000	0.0302	0.0000	0.0679	0.0000	0.0502
Nitrogen	0.0000	0.0056	0.0000	0.0041	0.0000	0.0025
CO2	0.0000	0.0352	0.0000	0.0405	0.0000	0.0240
H2S	0.0000	0.0000	0.0000	0.0000	0.0000	0.0000
H2O	0.0000	0.0148	0.0000	0.0070	0.0000	0.0034
NBP[1]95*	0.0000	0.0062	0.0000	0.0110	0.0000	0.0080
NBP[1]121*	0.0000	0.0074	0.0000	0.0141	0.0000	0.0100
NBP[1]147*	0.0000	0.0092	0.0000	0.0192	0.0000	0.0134
NBP[1]171*	0.0000	0.0161	0.0000	0.0370	0.0000	0.0254
NBP[1]195*	0.0000	0.0186	0.0000	0.0454	0.0000	0.0309
NBP[1]222*	0.0000	0.0111	0.0000	0.0293	0.0000	0.0197
NBP[1]248*	0.0000	0.0071	0.0000	0.0201	0.0000	0.0133
NBP[1]273*	0.0000	0.0042	0.0000	0.0126	0.0000	0.0082
NBP[1]299*	0.0000	0.0022	0.0000	0.0072	0.0000	0.0047
NBP[1]325*	0.0000	0.0010	0.0000	0.0036	0.0000	0.0023
NBP[1]351*	0.0000	0.0005	0.0000	0.0019	0.0000	0.0012
NBP[1]377*	0.0000	0.0003	0.0000	0.0011	0.0000	0.0007
NBP[1]402*	0.0000	0.0001	0.0000	0.0006	0.0000	0.0004
NBP[1]428*	0.0000	0.0001	0.0000	0.0003	0.0000	0.0002
NBP[1]454*	0.0000	0.0000	0.0000	0.0002	0.0000	0.0001
NBP[1]480*	0.0000	0.0000	0.0000	0.0001	0.0000	0.0001
NBP[1]505*	0.0000	0.0000	0.0000	0.0001	0.0000	0.0000
NBP[1]531*	0.0000	0.0000	0.0000	0.0000	0.0000	0.0000

* Specified by user.

Material Stream: 13 (continued)

Fluid Package: Basis-1
Property Package: Peng-Robinson

COMPOSITION

Vapour Phase (continued)

Phase Fraction 0.0000

COMPONENTS	MOLAR FLOW (kgmole/h)	MOLE FRACTION	MASS FLOW (tonne/d)	MASS FRACTION	LIQUID VOLUME FLOW (m3/h)	LIQUID VOLUME FRACTION
NBP[1]557*	0.0000	0.0000	0.0000	0.0000	0.0000	0.0000
NBP[1]582*	0.0000	0.0000	0.0000	0.0000	0.0000	0.0000
NBP[1]608*	0.0000	0.0000	0.0000	0.0000	0.0000	0.0000
NBP[1]634*	0.0000	0.0000	0.0000	0.0000	0.0000	0.0000
NBP[1]659*	0.0000	0.0000	0.0000	0.0000	0.0000	0.0000
NBP[1]685*	0.0000	0.0000	0.0000	0.0000	0.0000	0.0000
NBP[1]711*	0.0000	0.0000	0.0000	0.0000	0.0000	0.0000
NBP[1]736*	0.0000	0.0000	0.0000	0.0000	0.0000	0.0000
NBP[1]762*	0.0000	0.0000	0.0000	0.0000	0.0000	0.0000
NBP[1]788*	0.0000	0.0000	0.0000	0.0000	0.0000	0.0000
NBP[1]825*	0.0000	0.0000	0.0000	0.0000	0.0000	0.0000
NBP[1]873*	0.0000	0.0000	0.0000	0.0000	0.0000	0.0000
NBP[1]926*	0.0000	0.0000	0.0000	0.0000	0.0000	0.0000
NBP[1]978*	0.0000	0.0000	0.0000	0.0000	0.0000	0.0000
NBP[1]1021*	0.0000	0.0000	0.0000	0.0000	0.0000	0.0000
NBP[1]1075*	0.0000	0.0000	0.0000	0.0000	0.0000	0.0000
NBP[1]1123*	0.0000	0.0000	0.0000	0.0000	0.0000	0.0000
NBP[1]1173*	0.0000	0.0000	0.0000	0.0000	0.0000	0.0000
NBP[1]1250*	0.0000	0.0000	0.0000	0.0000	0.0000	0.0000
NBP[1]1339*	0.0000	0.0000	0.0000	0.0000	0.0000	0.0000
NBP[1]1432*	0.0000	0.0000	0.0000	0.0000	0.0000	0.0000
NBP[1]1528*	0.0000	0.0000	0.0000	0.0000	0.0000	0.0000
NBP[1]1637*	0.0000	0.0000	0.0000	0.0000	0.0000	0.0000
NBP[1]1732*	0.0000	0.0000	0.0000	0.0000	0.0000	0.0000
NBP[1]1819*	0.0000	0.0000	0.0000	0.0000	0.0000	0.0000
NBP[1]1913*	0.0000	0.0000	0.0000	0.0000	0.0000	0.0000
Total	0.0000	1.0000	0.0000	1.0000	0.0000	1.0000

Liquid Phase

Phase Fraction 1.575e-002

COMPONENTS	MOLAR FLOW (kgmole/h)	MOLE FRACTION	MASS FLOW (tonne/d)	MASS FRACTION	LIQUID VOLUME FLOW (m3/h)	LIQUID VOLUME FRACTION
Methane	0.0006	0.0048	0.0002	0.0001	0.0000	0.0003
Ethane	0.0005	0.0043	0.0004	0.0002	0.0000	0.0005
Propane	0.0011	0.0093	0.0012	0.0005	0.0001	0.0011
i-Butane	0.0004	0.0034	0.0006	0.0003	0.0000	0.0005
n-Butane	0.0010	0.0086	0.0014	0.0007	0.0001	0.0011
i-Pentane	0.0005	0.0042	0.0009	0.0004	0.0001	0.0006
n-Pentane	0.0007	0.0056	0.0012	0.0005	0.0001	0.0009
n-Hexane	0.0021	0.0173	0.0043	0.0020	0.0003	0.0030
Nitrogen	0.0000	0.0000	0.0000	0.0000	0.0000	0.0000
CO2	0.0001	0.0010	0.0001	0.0001	0.0000	0.0001
H2S	0.0000	0.0000	0.0000	0.0000	0.0000	0.0000
H2O	0.0000	0.0004	0.0000	0.0000	0.0000	0.0000
NBP[1]95*	0.0002	0.0016	0.0003	0.0001	0.0000	0.0002
NBP[1]121*	0.0003	0.0026	0.0005	0.0002	0.0000	0.0004
NBP[1]147*	0.0005	0.0043	0.0010	0.0005	0.0001	0.0007
NBP[1]171*	0.0012	0.0102	0.0026	0.0012	0.0002	0.0017
NBP[1]195*	0.0019	0.0161	0.0043	0.0020	0.0003	0.0028
NBP[1]222*	0.0017	0.0144	0.0042	0.0019	0.0002	0.0026
NBP[1]248*	0.0016	0.0135	0.0042	0.0019	0.0002	0.0026
NBP[1]273*	0.0014	0.0118	0.0039	0.0018	0.0002	0.0024
NBP[1]299*	0.0012	0.0096	0.0034	0.0016	0.0002	0.0021
NBP[1]325*	0.0008	0.0071	0.0027	0.0012	0.0001	0.0016
NBP[1]351*	0.0007	0.0057	0.0023	0.0010	0.0001	0.0014

* Specified by user.

Material Stream: 13 (continued)

Fluid Package: Basis-1
Property Package: Peng-Robinson

COMPOSITION

Liquid Phase (continued)

Phase Fraction 1.575e-002

COMPONENTS	MOLAR FLOW (kgmole/h)	MOLE FRACTION	MASS FLOW (tonne/d)	MASS FRACTION	LIQUID VOLUME FLOW (m3/h)	LIQUID VOLUME FRACTION
NBP[1]377*	0.0006	0.0050	0.0021	0.0010	0.0001	0.0013
NBP[1]402*	0.0005	0.0043	0.0020	0.0009	0.0001	0.0012
NBP[1]428*	0.0005	0.0039	0.0019	0.0009	0.0001	0.0011
NBP[1]454*	0.0004	0.0036	0.0019	0.0009	0.0001	0.0011
NBP[1]480*	0.0004	0.0034	0.0019	0.0009	0.0001	0.0011
NBP[1]505*	0.0004	0.0031	0.0018	0.0008	0.0001	0.0010
NBP[1]531*	0.0003	0.0027	0.0017	0.0008	0.0001	0.0010
NBP[1]557*	0.0003	0.0024	0.0016	0.0007	0.0001	0.0009
NBP[1]582*	0.0003	0.0022	0.0015	0.0007	0.0001	0.0009
NBP[1]608*	0.0002	0.0019	0.0015	0.0007	0.0001	0.0008
NBP[1]634*	0.0002	0.0018	0.0014	0.0006	0.0001	0.0008
NBP[1]659*	0.0002	0.0016	0.0014	0.0006	0.0001	0.0007
NBP[1]685*	0.0002	0.0016	0.0014	0.0006	0.0001	0.0008
NBP[1]711*	0.0002	0.0016	0.0015	0.0007	0.0001	0.0008
NBP[1]736*	0.0002	0.0015	0.0015	0.0007	0.0001	0.0008
NBP[1]762*	0.0002	0.0014	0.0014	0.0007	0.0001	0.0008
NBP[1]788*	0.0002	0.0013	0.0014	0.0007	0.0001	0.0007
NBP[1]825*	0.0003	0.0022	0.0026	0.0012	0.0001	0.0013
NBP[1]873*	0.0002	0.0016	0.0020	0.0009	0.0001	0.0010
NBP[1]926*	0.0002	0.0014	0.0020	0.0009	0.0001	0.0010
NBP[1]978*	0.0002	0.0017	0.0026	0.0012	0.0001	0.0013
NBP[1]1021*	0.0001	0.0011	0.0018	0.0008	0.0001	0.0009
NBP[1]1075*	0.0001	0.0012	0.0020	0.0009	0.0001	0.0010
NBP[1]1123*	0.0002	0.0018	0.0033	0.0015	0.0001	0.0016
NBP[1]1173*	0.0004	0.0030	0.0057	0.0026	0.0002	0.0027
NBP[1]1250*	0.0025	0.0208	0.0429	0.0195	0.0018	0.0202
NBP[1]1339*	0.0161	0.1346	0.3102	0.1411	0.0129	0.1434
NBP[1]1432*	0.0251	0.2094	0.5274	0.2399	0.0216	0.2401
NBP[1]1528*	0.0180	0.1504	0.4082	0.1857	0.0165	0.1834
NBP[1]1637*	0.0127	0.1056	0.3047	0.1386	0.0122	0.1352
NBP[1]1732*	0.0101	0.0845	0.2565	0.1167	0.0101	0.1126
NBP[1]1819*	0.0097	0.0812	0.2589	0.1178	0.0101	0.1122
NBP[1]1913*	0.0000	0.0000	0.0001	0.0000	0.0000	0.0000
Total	0.1198	1.0000	2.1983	1.0000	0.0901	1.0000

Liquid Phase

Phase Fraction 0.9842

COMPONENTS	MOLAR FLOW (kgmole/h)	MOLE FRACTION	MASS FLOW (tonne/d)	MASS FRACTION	LIQUID VOLUME FLOW (m3/h)	LIQUID VOLUME FRACTION
Methane	0.0265	0.0035	0.0102	0.0003	0.0014	0.0007
Ethane	0.0355	0.0047	0.0256	0.0007	0.0030	0.0016
Propane	0.0982	0.0131	0.1039	0.0027	0.0085	0.0045
i-Butane	0.0412	0.0055	0.0575	0.0015	0.0043	0.0022
n-Butane	0.1146	0.0153	0.1599	0.0042	0.0114	0.0060
i-Pentane	0.0647	0.0086	0.1120	0.0029	0.0075	0.0039
n-Pentane	0.0919	0.0123	0.1592	0.0042	0.0105	0.0056
n-Hexane	0.3400	0.0454	0.7033	0.0185	0.0442	0.0233
Nitrogen	0.0002	0.0000	0.0001	0.0000	0.0000	0.0000
CO2	0.0054	0.0007	0.0057	0.0001	0.0003	0.0002
H2S	0.0000	0.0000	0.0000	0.0000	0.0000	0.0000
H2O	0.0024	0.0003	0.0011	0.0000	0.0000	0.0000
NBP[1]95*	0.0278	0.0037	0.0452	0.0012	0.0028	0.0015
NBP[1]121*	0.0478	0.0064	0.0835	0.0022	0.0051	0.0027
NBP[1]147*	0.0872	0.0116	0.1678	0.0044	0.0100	0.0053
NBP[1]171*	0.2249	0.0300	0.4733	0.0125	0.0277	0.0146

* Specified by user.

Material Stream: 13 (continued)

Fluid Package: Basis-1
Property Package: Peng-Robinson

COMPOSITION

Liquid Phase (continued)

Phase Fraction 0.9842

COMPONENTS	MOLAR FLOW (kgmole/h)	MOLE FRACTION	MASS FLOW (tonne/d)	MASS FRACTION	LIQUID VOLUME FLOW (m3/h)	LIQUID VOLUME FRACTION
NBP[1]195*	0.3836	0.0512	0.8615	0.0227	0.0498	0.0263
NBP[1]222*	0.3721	0.0497	0.8988	0.0237	0.0514	0.0271
NBP[1]248*	0.3793	0.0507	0.9851	0.0259	0.0556	0.0293
NBP[1]273*	0.3581	0.0478	0.9945	0.0262	0.0555	0.0293
NBP[1]299*	0.3158	0.0422	0.9352	0.0246	0.0517	0.0272
NBP[1]325*	0.2506	0.0335	0.7884	0.0207	0.0431	0.0227
NBP[1]351*	0.2169	0.0290	0.7253	0.0191	0.0393	0.0207
NBP[1]377*	0.2076	0.0277	0.7404	0.0195	0.0397	0.0209
NBP[1]402*	0.1960	0.0262	0.7455	0.0196	0.0395	0.0209
NBP[1]428*	0.1901	0.0254	0.7712	0.0203	0.0405	0.0214
NBP[1]454*	0.1918	0.0256	0.8318	0.0219	0.0432	0.0228
NBP[1]480*	0.1958	0.0262	0.9072	0.0239	0.0467	0.0246
NBP[1]505*	0.1905	0.0255	0.9412	0.0248	0.0480	0.0253
NBP[1]531*	0.1843	0.0246	0.9692	0.0255	0.0490	0.0258
NBP[1]557*	0.1778	0.0238	0.9945	0.0262	0.0498	0.0263
NBP[1]582*	0.1702	0.0227	1.0107	0.0266	0.0502	0.0265
NBP[1]608*	0.1640	0.0219	1.0331	0.0272	0.0509	0.0268
NBP[1]634*	0.1608	0.0215	1.0736	0.0283	0.0525	0.0277
NBP[1]659*	0.1584	0.0212	1.1179	0.0294	0.0542	0.0286
NBP[1]685*	0.1639	0.0219	1.2212	0.0321	0.0587	0.0310
NBP[1]711*	0.1713	0.0229	1.3430	0.0353	0.0641	0.0338
NBP[1]736*	0.1696	0.0227	1.3901	0.0366	0.0659	0.0347
NBP[1]762*	0.1651	0.0221	1.4200	0.0374	0.0668	0.0352
NBP[1]788*	0.1583	0.0212	1.4409	0.0379	0.0673	0.0355
NBP[1]825*	0.2652	0.0354	2.5937	0.0683	0.1200	0.0633
NBP[1]873*	0.1828	0.0244	1.9384	0.0510	0.0886	0.0467
NBP[1]926*	0.1436	0.0192	1.6452	0.0433	0.0744	0.0392
NBP[1]978*	0.1472	0.0197	1.8499	0.0487	0.0824	0.0434
NBP[1]1021*	0.0727	0.0097	0.9637	0.0254	0.0426	0.0224
NBP[1]1075*	0.0448	0.0060	0.6290	0.0166	0.0275	0.0145
NBP[1]1123*	0.0415	0.0055	0.6234	0.0164	0.0270	0.0142
NBP[1]1173*	0.0296	0.0040	0.4715	0.0124	0.0202	0.0107
NBP[1]1250*	0.0368	0.0049	0.6338	0.0167	0.0269	0.0142
NBP[1]1339*	0.0203	0.0027	0.3898	0.0103	0.0162	0.0086
NBP[1]1432*	0.0006	0.0001	0.0124	0.0003	0.0005	0.0003
NBP[1]1528*	0.0000	0.0000	0.0000	0.0000	0.0000	0.0000
NBP[1]1637*	0.0000	0.0000	0.0000	0.0000	0.0000	0.0000
NBP[1]1732*	0.0000	0.0000	0.0000	0.0000	0.0000	0.0000
NBP[1]1819*	0.0000	0.0000	0.0000	0.0000	0.0000	0.0000
NBP[1]1913*	0.0000	0.0000	0.0000	0.0000	0.0000	0.0000
Total	7.4855	1.0000	37.9996	1.0000	1.8965	1.0000

Material Stream: FLASH-G

Fluid Package: Basis-1
Property Package: Peng-Robinson

CONDITIONS

		Overall
Vapour / Phase Fraction		---
Temperature:	(F)	---
Pressure:	(psig)	450.0
Molar Flow	(MMSCFD)	0.1359
Mass Flow	(tonne/d)	6.156 *
Std Ideal Liq Vol Flow	(barrel/day)	80.89
Molar Enthalpy	(kJ/kgmole)	---

* Specified by user.

Material Stream: FLASH-G (continued)

Fluid Package: Basis-1
Property Package: Peng-Robinson

CONDITIONS

	Overall
Molar Entropy (kJ/kgmole-C)	---
Heat Flow (MMBtu/hr)	---
Liq Vol Flow @Std Cond (barrel/day)	87.30 *

PROPERTIES

	Overall
Molecular Weight	37.88
Molar Density (kgmole/m3)	---
Mass Density (kg/m3)	---
Act. Volume Flow (barrel/day)	---
Mass Enthalpy (kJ/kg)	---
Mass Entropy (kJ/kg-C)	---
Heat Capacity (kJ/kgmole-C)	---
Mass Heat Capacity (kJ/kg-C)	---
LHV Molar Basis (Std) (Btu/SCF)	---
LHV Mass Basis (Std) (kJ/kg)	---
Phase Fraction [Vol. Basis]	0.0000
Phase Fraction [Mass Basis]	0.0000
Partial Pressure of CO2 (psig)	-14.70
Cost Based on Flow (Cost/s)	0.0000
Act. Gas Flow (ACT_m3/h)	---
Avg. Liq. Density (kgmole/m3)	12.64
Specific Heat (kJ/kgmole-C)	---
Std. Gas Flow (STD_m3/h)	160.1
Std. Ideal Liq. Mass Density (kg/m3)	478.7
Act. Liq. Flow (barrel/day)	---
Z Factor	---
Watson K	14.89
User Property	---
Partial Pressure of H2S (psig)	-14.70
Cp/(Cp - R)	---
Cp/Cv	---
Heat of Vap. (kJ/kgmole)	---
Kinematic Viscosity (cSt)	---
Liq. Mass Density (Std. Cond) (kg/m3)	443.5
Liq. Vol. Flow (Std. Cond) (barrel/day)	87.30
Liquid Fraction	---
Molar Volume (m3/kgmole)	---
Mass Heat of Vap. (kJ/kg)	---
Phase Fraction [Molar Basis]	---
Surface Tension (dyne/cm)	---
Thermal Conductivity (W/m-K)	---
Viscosity (cP)	---
Cv (Semi-Ideal) (kJ/kgmole-C)	---
Mass Cv (Semi-Ideal) (kJ/kg-C)	---
Cv (kJ/kgmole-C)	---
Mass Cv (kJ/kg-C)	---
Cv (Ent. Method) (kJ/kgmole-C)	---
Mass Cv (Ent. Method) (kJ/kg-C)	---
Cp/Cv (Ent. Method)	---
Reid VP at 37.8 C (psig)	---
True VP at 37.8 C (psig)	---
Liq. Vol. Flow - Sum(Std. Cond) (barrel/day)	0.0000
HHV Molar Basis (Std) (Btu/SCF)	---
HHV Mass Basis (Std) (kJ/kg)	---
CO2 Loading	---
CO2 App ML Con (kgmole/m3)	---

* Specified by user.

Material Stream: FLASH-G (continued)

Fluid Package: Basis-1
Property Package: Peng-Robinson

PROPERTIES

	Overall
CO2 App WT Con (kgmol/kg)	1.012e-003
Phase Fraction [Act. Vol. Basis]	0.0000
Mass Exergy (kJ/kg)	9.741e+006
Viscosity Index	---
Ideal Gas Cp/Cv	1.000
Ideal Gas Cp (kJ/kgmole-C)	6.915e+007
Mass Ideal Gas Cp (kJ/kg-C)	1.825e+006
Bubble Point Pressure (psig)	---

COMPOSITION

Overall Phase

Vapour Fraction ---

COMPONENTS	MOLAR FLOW (kgmole/h)	MOLE FRACTION	MASS FLOW (tonne/d)	MASS FRACTION	LIQUID VOLUME FLOW (m3/h)	LIQUID VOLUME FRACTION
Methane	2.2576 *	0.3334 *	0.8692 *	0.1412 *	0.1210 *	0.2258 *
Ethane	1.1838 *	0.1748 *	0.8543 *	0.1388 *	0.1001 *	0.1868 *
Propane	1.4351 *	0.2120 *	1.5188 *	0.2467 *	0.1249 *	0.2331 *
i-Butane	0.2831 *	0.0418 *	0.3950 *	0.0642 *	0.0293 *	0.0547 *
n-Butane	0.5947 *	0.0878 *	0.8295 *	0.1348 *	0.0593 *	0.1106 *
i-Pentane	0.1287 *	0.0190 *	0.2228 *	0.0362 *	0.0149 *	0.0278 *
n-Pentane	0.1372 *	0.0203 *	0.2376 *	0.0386 *	0.0157 *	0.0293 *
n-Hexane	0.1223 *	0.0181 *	0.2530 *	0.0411 *	0.0159 *	0.0297 *
Nitrogen	0.0260 *	0.0038 *	0.0175 *	0.0028 *	0.0009 *	0.0017 *
CO2	0.2597 *	0.0384 *	0.2743 *	0.0446 *	0.0138 *	0.0258 *
H2S	0.0000 *	0.0000 *	0.0000 *	0.0000 *	0.0000 *	0.0000 *
H2O	0.0116 *	0.0017 *	0.0050 *	0.0008 *	0.0002 *	0.0004 *
NBP[1]95*	0.0492 *	0.0073 *	0.0802 *	0.0130 *	0.0049 *	0.0092 *
NBP[1]121*	0.0494 *	0.0073 *	0.0863 *	0.0140 *	0.0052 *	0.0097 *
NBP[1]147*	0.0493 *	0.0073 *	0.0948 *	0.0154 *	0.0056 *	0.0105 *
NBP[1]171*	0.0691 *	0.0102 *	0.1455 *	0.0236 *	0.0085 *	0.0159 *
NBP[1]195*	0.0624 *	0.0092 *	0.1401 *	0.0228 *	0.0081 *	0.0151 *
NBP[1]222*	0.0278 *	0.0041 *	0.0672 *	0.0109 *	0.0038 *	0.0072 *
NBP[1]248*	0.0135 *	0.0020 *	0.0350 *	0.0057 *	0.0020 *	0.0037 *
NBP[1]273*	0.0061 *	0.0009 *	0.0169 *	0.0027 *	0.0009 *	0.0018 *
NBP[1]299*	0.0026 *	0.0004 *	0.0076 *	0.0012 *	0.0004 *	0.0008 *
NBP[1]325*	0.0010 *	0.0001 *	0.0030 *	0.0005 *	0.0002 *	0.0003 *
NBP[1]351*	0.0004 *	0.0001 *	0.0013 *	0.0002 *	0.0001 *	0.0001 *
NBP[1]377*	0.0002 *	0.0000 *	0.0006 *	0.0001 *	0.0000 *	0.0001 *
NBP[1]402*	0.0001 *	0.0000 *	0.0003 *	0.0000 *	0.0000 *	0.0000 *
NBP[1]428*	0.0000 *	0.0000 *	0.0001 *	0.0000 *	0.0000 *	0.0000 *
NBP[1]454*	0.0000 *	0.0000 *	0.0001 *	0.0000 *	0.0000 *	0.0000 *
NBP[1]480*	0.0000 *	0.0000 *	0.0000 *	0.0000 *	0.0000 *	0.0000 *
NBP[1]505*	0.0000 *	0.0000 *	0.0000 *	0.0000 *	0.0000 *	0.0000 *
NBP[1]531*	0.0000 *	0.0000 *	0.0000 *	0.0000 *	0.0000 *	0.0000 *
NBP[1]557*	0.0000 *	0.0000 *	0.0000 *	0.0000 *	0.0000 *	0.0000 *
NBP[1]582*	0.0000 *	0.0000 *	0.0000 *	0.0000 *	0.0000 *	0.0000 *
NBP[1]608*	0.0000 *	0.0000 *	0.0000 *	0.0000 *	0.0000 *	0.0000 *
NBP[1]634*	0.0000 *	0.0000 *	0.0000 *	0.0000 *	0.0000 *	0.0000 *
NBP[1]659*	0.0000 *	0.0000 *	0.0000 *	0.0000 *	0.0000 *	0.0000 *
NBP[1]685*	0.0000 *	0.0000 *	0.0000 *	0.0000 *	0.0000 *	0.0000 *
NBP[1]711*	0.0000 *	0.0000 *	0.0000 *	0.0000 *	0.0000 *	0.0000 *
NBP[1]736*	0.0000 *	0.0000 *	0.0000 *	0.0000 *	0.0000 *	0.0000 *
NBP[1]762*	0.0000 *	0.0000 *	0.0000 *	0.0000 *	0.0000 *	0.0000 *
NBP[1]788*	0.0000 *	0.0000 *	0.0000 *	0.0000 *	0.0000 *	0.0000 *
NBP[1]825*	0.0000 *	0.0000 *	0.0000 *	0.0000 *	0.0000 *	0.0000 *
NBP[1]873*	0.0000 *	0.0000 *	0.0000 *	0.0000 *	0.0000 *	0.0000 *
NBP[1]926*	0.0000 *	0.0000 *	0.0000 *	0.0000 *	0.0000 *	0.0000 *

* Specified by user.

Material Stream: FLASH-G (continued)

Fluid Package: Basis-1
Property Package: Peng-Robinson

COMPOSITION

Overall Phase (continued)

Vapour Fraction ---

COMPONENTS	MOLAR FLOW (kgmole/h)	MOLE FRACTION	MASS FLOW (tonne/d)	MASS FRACTION	LIQUID VOLUME FLOW (m3/h)	LIQUID VOLUME FRACTION
NBP[1]978*	0.0000 *	0.0000 *	0.0000 *	0.0000 *	0.0000 *	0.0000 *
NBP[1]1021*	0.0000 *	0.0000 *	0.0000 *	0.0000 *	0.0000 *	0.0000 *
NBP[1]1075*	0.0000 *	0.0000 *	0.0000 *	0.0000 *	0.0000 *	0.0000 *
NBP[1]1123*	0.0000 *	0.0000 *	0.0000 *	0.0000 *	0.0000 *	0.0000 *
NBP[1]1173*	0.0000 *	0.0000 *	0.0000 *	0.0000 *	0.0000 *	0.0000 *
NBP[1]1250*	0.0000 *	0.0000 *	0.0000 *	0.0000 *	0.0000 *	0.0000 *
NBP[1]1339*	0.0000 *	0.0000 *	0.0000 *	0.0000 *	0.0000 *	0.0000 *
NBP[1]1432*	0.0000 *	0.0000 *	0.0000 *	0.0000 *	0.0000 *	0.0000 *
NBP[1]1528*	0.0000 *	0.0000 *	0.0000 *	0.0000 *	0.0000 *	0.0000 *
NBP[1]1637*	0.0000 *	0.0000 *	0.0000 *	0.0000 *	0.0000 *	0.0000 *
NBP[1]1732*	0.0000 *	0.0000 *	0.0000 *	0.0000 *	0.0000 *	0.0000 *
NBP[1]1819*	0.0000 *	0.0000 *	0.0000 *	0.0000 *	0.0000 *	0.0000 *
NBP[1]1913*	0.0000 *	0.0000 *	0.0000 *	0.0000 *	0.0000 *	0.0000 *
Total	6.7707	1.0000	6.1561	1.0000	0.5358	1.0000

Material Stream: Gas-PRD-

Fluid Package: Basis-1
Property Package: Peng-Robinson

CONDITIONS

		Overall
Vapour / Phase Fraction		---
Temperature:	(F)	---
Pressure:	(psig)	450.0 *
Molar Flow	(MMSCFD)	5.400 *
Mass Flow	(tonne/d)	139.4
Std Ideal Liq Vol Flow	(barrel/day)	2425
Molar Enthalpy	(kJ/kgmole)	---
Molar Entropy	(kJ/kgmole-C)	---
Heat Flow	(MMBtu/hr)	---
Liq Vol Flow @Std Cond	(barrel/day)	9.561e+005 *

PROPERTIES

		Overall
Molecular Weight		21.60
Molar Density	(kgmole/m3)	---
Mass Density	(kg/m3)	---
Act. Volume Flow	(barrel/day)	---
Mass Enthalpy	(kJ/kg)	---
Mass Entropy	(kJ/kg-C)	---
Heat Capacity	(kJ/kgmole-C)	---
Mass Heat Capacity	(kJ/kg-C)	---
LHV Molar Basis (Std)	(Btu/SCF)	1078
LHV Mass Basis (Std)	(kJ/kg)	4.406e+004
Phase Fraction [Vol. Basis]		0.0000
Phase Fraction [Mass Basis]		0.0000
Partial Pressure of CO2	(psig)	-14.70
Cost Based on Flow	(Cost/s)	0.0000
Act. Gas Flow	(ACT_m3/h)	---
Avg. Liq. Density	(kgmole/m3)	16.75
Specific Heat	(kJ/kgmole-C)	---
Std. Gas Flow	(STD_m3/h)	6359
Std. Ideal Liq. Mass Density	(kg/m3)	361.7
Act. Liq. Flow	(barrel/day)	---
Z Factor		---

* Specified by user.

Material Stream: Gas-PRD- (continued)

Fluid Package: Basis-1
Property Package: Peng-Robinson

PROPERTIES

	Overall				
Watson K	17.22				
User Property	---				
Partial Pressure of H2S (psig)	-14.70				
Cp/(Cp - R)	---				
Cp/Cv	---				
Heat of Vap. (kJ/kgmole)	---				
Kinematic Viscosity (cSt)	---				
Liq. Mass Density (Std. Cond) (kg/m3)	0.9172				
Liq. Vol. Flow (Std. Cond) (barrel/day)	9.561e+005				
Liquid Fraction	---				
Molar Volume (m3/kgmole)	---				
Mass Heat of Vap. (kJ/kg)	---				
Phase Fraction [Molar Basis]	---				
Surface Tension (dyne/cm)	---				
Thermal Conductivity (W/m-K)	---				
Viscosity (cP)	---				
Cv (Semi-Ideal) (kJ/kgmole-C)	---				
Mass Cv (Semi-Ideal) (kJ/kg-C)	---				
Cv (kJ/kgmole-C)	---				
Mass Cv (kJ/kg-C)	---				
Cv (Ent. Method) (kJ/kgmole-C)	---				
Mass Cv (Ent. Method) (kJ/kg-C)	---				
Cp/Cv (Ent. Method)	---				
Reid VP at 37.8 C (psig)	---				
True VP at 37.8 C (psig)	---				
Liq. Vol. Flow - Sum(Std. Cond) (barrel/day)	0.0000				
HHV Molar Basis (Std) (Btu/SCF)	1181				
HHV Mass Basis (Std) (kJ/kg)	4.824e+004				
CO2 Loading	---				
CO2 App ML Con (kgmole/m3)	---				
CO2 App WT Con (kgmol/kg)	1.576e-003				
Phase Fraction [Act. Vol. Basis]	0.0000				
Mass Exergy (kJ/kg)	9.743e+006				
Viscosity Index	---				
Ideal Gas Cp/Cv	1.000				
Ideal Gas Cp (kJ/kgmole-C)	8.446e+007				
Mass Ideal Gas Cp (kJ/kg-C)	3.911e+006				
Bubble Point Pressure (psig)	---				

COMPOSITION

Overall Phase

Vapour Fraction ---

COMPONENTS	MOLAR FLOW (kgmole/h)	MOLE FRACTION	MASS FLOW (tonne/d)	MASS FRACTION	LIQUID VOLUME FLOW (m3/h)	LIQUID VOLUME FRACTION
Methane	204.7864 *	0.7614 *	78.8488 *	0.5656 *	10.9734 *	0.6832 *
Ethane	27.6169 *	0.1027 *	19.9305 *	0.1430 *	2.3348 *	0.1454 *
Propane	13.8326 *	0.0514 *	14.6395 *	0.1050 *	1.2039 *	0.0750 *
i-Butane	1.7456 *	0.0065 *	2.4350 *	0.0175 *	0.1805 *	0.0112 *
n-Butane	3.3566 *	0.0125 *	4.6824 *	0.0336 *	0.3345 *	0.0208 *
i-Pentane	0.7208 *	0.0027 *	1.2482 *	0.0090 *	0.0834 *	0.0052 *
n-Pentane	0.8230 *	0.0031 *	1.4252 *	0.0102 *	0.0943 *	0.0059 *
n-Hexane	1.3475 *	0.0050 *	2.7870 *	0.0200 *	0.1752 *	0.0109 *
Nitrogen	5.5729 *	0.0207 *	3.7467 *	0.0269 *	0.1936 *	0.0121 *
CO2	9.1554 *	0.0340 *	9.6702 *	0.0694 *	0.4882 *	0.0304 *
H2S	0.0005 *	0.0000 *	0.0004 *	0.0000 *	0.0000 *	0.0000 *
H2O	0.0000 *	0.0000 *	0.0000 *	0.0000 *	0.0000 *	0.0000 *
NBP[1]95*	0.0000 *	0.0000 *	0.0000 *	0.0000 *	0.0000 *	0.0000 *

* Specified by user.

Material Stream: Gas-PRD- (continued)

Fluid Package: Basis-1
Property Package: Peng-Robinson

COMPOSITION

Overall Phase (continued)

Vapour Fraction ---

COMPONENTS	MOLAR FLOW (kgmole/h)	MOLE FRACTION	MASS FLOW (tonne/d)	MASS FRACTION	LIQUID VOLUME FLOW (m3/h)	LIQUID VOLUME FRACTION
NBP[1]121*	0.0000 *	0.0000 *	0.0000 *	0.0000 *	0.0000 *	0.0000 *
NBP[1]147*	0.0000 *	0.0000 *	0.0000 *	0.0000 *	0.0000 *	0.0000 *
NBP[1]171*	0.0000 *	0.0000 *	0.0000 *	0.0000 *	0.0000 *	0.0000 *
NBP[1]195*	0.0000 *	0.0000 *	0.0000 *	0.0000 *	0.0000 *	0.0000 *
NBP[1]222*	0.0000 *	0.0000 *	0.0000 *	0.0000 *	0.0000 *	0.0000 *
NBP[1]248*	0.0000 *	0.0000 *	0.0000 *	0.0000 *	0.0000 *	0.0000 *
NBP[1]273*	0.0000 *	0.0000 *	0.0000 *	0.0000 *	0.0000 *	0.0000 *
NBP[1]299*	0.0000 *	0.0000 *	0.0000 *	0.0000 *	0.0000 *	0.0000 *
NBP[1]325*	0.0000 *	0.0000 *	0.0000 *	0.0000 *	0.0000 *	0.0000 *
NBP[1]351*	0.0000 *	0.0000 *	0.0000 *	0.0000 *	0.0000 *	0.0000 *
NBP[1]377*	0.0000 *	0.0000 *	0.0000 *	0.0000 *	0.0000 *	0.0000 *
NBP[1]402*	0.0000 *	0.0000 *	0.0000 *	0.0000 *	0.0000 *	0.0000 *
NBP[1]428*	0.0000 *	0.0000 *	0.0000 *	0.0000 *	0.0000 *	0.0000 *
NBP[1]454*	0.0000 *	0.0000 *	0.0000 *	0.0000 *	0.0000 *	0.0000 *
NBP[1]480*	0.0000 *	0.0000 *	0.0000 *	0.0000 *	0.0000 *	0.0000 *
NBP[1]505*	0.0000 *	0.0000 *	0.0000 *	0.0000 *	0.0000 *	0.0000 *
NBP[1]531*	0.0000 *	0.0000 *	0.0000 *	0.0000 *	0.0000 *	0.0000 *
NBP[1]557*	0.0000 *	0.0000 *	0.0000 *	0.0000 *	0.0000 *	0.0000 *
NBP[1]582*	0.0000 *	0.0000 *	0.0000 *	0.0000 *	0.0000 *	0.0000 *
NBP[1]608*	0.0000 *	0.0000 *	0.0000 *	0.0000 *	0.0000 *	0.0000 *
NBP[1]634*	0.0000 *	0.0000 *	0.0000 *	0.0000 *	0.0000 *	0.0000 *
NBP[1]659*	0.0000 *	0.0000 *	0.0000 *	0.0000 *	0.0000 *	0.0000 *
NBP[1]685*	0.0000 *	0.0000 *	0.0000 *	0.0000 *	0.0000 *	0.0000 *
NBP[1]711*	0.0000 *	0.0000 *	0.0000 *	0.0000 *	0.0000 *	0.0000 *
NBP[1]736*	0.0000 *	0.0000 *	0.0000 *	0.0000 *	0.0000 *	0.0000 *
NBP[1]762*	0.0000 *	0.0000 *	0.0000 *	0.0000 *	0.0000 *	0.0000 *
NBP[1]788*	0.0000 *	0.0000 *	0.0000 *	0.0000 *	0.0000 *	0.0000 *
NBP[1]825*	0.0000 *	0.0000 *	0.0000 *	0.0000 *	0.0000 *	0.0000 *
NBP[1]873*	0.0000 *	0.0000 *	0.0000 *	0.0000 *	0.0000 *	0.0000 *
NBP[1]926*	0.0000 *	0.0000 *	0.0000 *	0.0000 *	0.0000 *	0.0000 *
NBP[1]978*	0.0000 *	0.0000 *	0.0000 *	0.0000 *	0.0000 *	0.0000 *
NBP[1]1021*	0.0000 *	0.0000 *	0.0000 *	0.0000 *	0.0000 *	0.0000 *
NBP[1]1075*	0.0000 *	0.0000 *	0.0000 *	0.0000 *	0.0000 *	0.0000 *
NBP[1]1123*	0.0000 *	0.0000 *	0.0000 *	0.0000 *	0.0000 *	0.0000 *
NBP[1]1173*	0.0000 *	0.0000 *	0.0000 *	0.0000 *	0.0000 *	0.0000 *
NBP[1]1250*	0.0000 *	0.0000 *	0.0000 *	0.0000 *	0.0000 *	0.0000 *
NBP[1]1339*	0.0000 *	0.0000 *	0.0000 *	0.0000 *	0.0000 *	0.0000 *
NBP[1]1432*	0.0000 *	0.0000 *	0.0000 *	0.0000 *	0.0000 *	0.0000 *
NBP[1]1528*	0.0000 *	0.0000 *	0.0000 *	0.0000 *	0.0000 *	0.0000 *
NBP[1]1637*	0.0000 *	0.0000 *	0.0000 *	0.0000 *	0.0000 *	0.0000 *
NBP[1]1732*	0.0000 *	0.0000 *	0.0000 *	0.0000 *	0.0000 *	0.0000 *
NBP[1]1819*	0.0000 *	0.0000 *	0.0000 *	0.0000 *	0.0000 *	0.0000 *
NBP[1]1913*	0.0000 *	0.0000 *	0.0000 *	0.0000 *	0.0000 *	0.0000 *
Total	268.9582	1.0000	139.4139	1.0000	16.0619	1.0000

Material Stream: Pandhi

Fluid Package: Basis-1
Property Package: Peng-Robinson

CONDITIONS

	Overall	Vapour Phase	Liquid Phase	Aqueous Phase
Vapour / Phase Fraction	0.6833	0.6833	0.0455	0.2712
Temperature: (F)	85.00 *	85.00	85.00	85.00
Pressure: (psig)	450.0 *	450.0	450.0	450.0
Molar Flow (MMSCFD)	7.874	5.380	0.3586	2.135

* Specified by user.

Material Stream: Pandhi (continued)

Fluid Package: Basis-1
Property Package: Peng-Robinson

CONDITIONS

	Overall	Vapour Phase	Liquid Phase	Aqueous Phase
Mass Flow (tonne/d)	237.5	137.5	54.03	46.00
Std Ideal Liq Vol Flow (barrel/day)	3142	2402	450.0	290.0
Molar Enthalpy (kJ/kgmole)	-1.516e+005	-8.928e+004	-2.868e+005	-2.859e+005
Molar Entropy (kJ/kgmole-C)	133.6	159.2	218.5	54.86
Heat Flow (MMBtu/hr)	-56.34	-22.68	-4.856	-28.81
Liq Vol Flow @Std Cond (barrel/day)	2.954e+005 *	9.526e+005	434.8	285.1

PROPERTIES

	Overall	Vapour Phase	Liquid Phase	Aqueous Phase
Molecular Weight	25.24	21.38	126.0	18.03
Molar Density (kgmole/m3)	2.032	1.424	6.091	55.76
Mass Density (kg/m3)	51.28	30.45	767.6	1005
Act. Volume Flow (barrel/day)	2.914e+004	2.841e+004	442.7	287.9
Mass Enthalpy (kJ/kg)	-6006	-4175	-2276	-1.586e+004
Mass Entropy (kJ/kg-C)	5.293	7.444	1.734	3.043
Heat Capacity (kJ/kgmole-C)	64.84	47.20	253.3	77.64
Mass Heat Capacity (kJ/kg-C)	2.569	2.207	2.010	4.307
LHV Molar Basis (Std) (Btu/SCF)	---	---	---	1.835e-004
LHV Mass Basis (Std) (kJ/kg)	---	---	---	8.987e-003
Phase Fraction [Vol. Basis]	0.7645	0.7645	0.1432	9.229e-002
Phase Fraction [Mass Basis]	0.5789	0.5789	0.2274	0.1937
Partial Pressure of CO2 (psig)	1.138	---	---	---
Cost Based on Flow (Cost/s)	0.0000	0.0000	0.0000	0.0000
Act. Gas Flow (ACT_m3/h)	188.2	188.2	---	---
Avg. Liq. Density (kgmole/m3)	18.84	16.84	5.992	55.35
Specific Heat (kJ/kgmole-C)	64.84	47.20	253.3	77.64
Std. Gas Flow (STD_m3/h)	9272	6336	422.3	2514
Std. Ideal Liq. Mass Density (kg/m3)	475.5	360.1	755.2	997.8
Act. Liq. Flow (barrel/day)	730.6	---	442.7	287.9
Z Factor	---	0.8944	0.2091	2.284e-002
Watson K	15.58	17.28	11.99	8.497
User Property	---	---	---	---
Partial Pressure of H2S (psig)	-14.70	---	---	---
Cp/(Cp - R)	1.147	1.214	1.034	1.120
Cp/Cv	1.164	1.389	1.034	1.149
Heat of Vap. (kJ/kgmole)	6.864e+004	---	---	---
Kinematic Viscosity (cSt)	---	0.3953	11.77	0.8027
Liq. Mass Density (Std. Cond) (kg/m3)	5.058	0.9080	781.4	1015
Liq. Vol. Flow (Std. Cond) (barrel/day)	2.954e+005	9.526e+005	434.8	285.1
Liquid Fraction	0.3167	0.0000	1.000	1.000
Molar Volume (m3/kgmole)	0.4922	0.7023	0.1642	1.793e-002
Mass Heat of Vap. (kJ/kg)	2720	---	---	---
Phase Fraction [Molar Basis]	0.6833	0.6833	0.0455	0.2712
Surface Tension (dyne/cm)	---	---	15.90	71.30
Thermal Conductivity (W/m-K)	---	3.307e-002	0.1005	0.6175
Viscosity (cP)	---	1.204e-002	9.037	0.8068
Cv (Semi-Ideal) (kJ/kgmole-C)	56.53	38.88	245.0	69.33
Mass Cv (Semi-Ideal) (kJ/kg-C)	2.240	1.818	1.944	3.846
Cv (kJ/kgmole-C)	55.70	33.97	245.0	67.55
Mass Cv (kJ/kg-C)	2.207	1.589	1.944	3.748
Cv (Ent. Method) (kJ/kgmole-C)	---	-3703	---	67.05
Mass Cv (Ent. Method) (kJ/kg-C)	---	-173.2	---	3.720
Cp/Cv (Ent. Method)	---	-1.275e-002	---	1.158
Reid VP at 37.8 C (psig)	3319	---	98.95	---
True VP at 37.8 C (psig)	6318	4184	480.8	17.45
Liq. Vol. Flow - Sum(Std. Cond) (barrel/day)	9.533e+005	9.526e+005	434.8	285.1
HHV Molar Basis (Std) (Btu/SCF)	---	---	---	46.45

* Specified by user.

Material Stream: Pandhi (continued)

Fluid Package: Basis-1
Property Package: Peng-Robinson

PROPERTIES

	Overall	Vapour Phase	Liquid Phase	Aqueous Phase
HHV Mass Basis (Std) (kJ/kg)	---	---	---	2274
CO2 Loading	---	---	---	---
CO2 App ML Con (kgmole/m3)	---	---	8.249e-002	2.230e-002
CO2 App WT Con (kgmol/kg)	---	---	1.075e-004	2.219e-005
Phase Fraction [Act. Vol. Basis]	0.9749	0.9749	1.519e-002	9.880e-003
Mass Exergy (kJ/kg)	234.0	---	---	---
Viscosity Index	-12.15	---	---	---
Ideal Gas Cp/Cv	1.217	1.249	1.043	1.329
Ideal Gas Cp (kJ/kgmole-C)	46.72	41.73	199.6	33.60
Mass Ideal Gas Cp (kJ/kg-C)	1.851	1.951	1.584	1.864
Bubble Point Pressure (psig)	6241	---	---	---

COMPOSITION

Overall Phase

Vapour Fraction 0.6833

COMPONENTS	MOLAR FLOW (kgmole/h)	MOLE FRACTION	MASS FLOW (tonne/d)	MASS FRACTION	LIQUID VOLUME FLOW (m3/h)	LIQUID VOLUME FRACTION
Methane	207.0440	0.5280	79.7181	0.3356	11.0944	0.5330
Ethane	28.8006	0.0734	20.7848	0.0875	2.4348	0.1170
Propane	15.2677	0.0389	16.1583	0.0680	1.3288	0.0638
i-Butane	2.0287	0.0052	2.8300	0.0119	0.2098	0.0101
n-Butane	3.9513	0.0101	5.5120	0.0232	0.3938	0.0189
i-Pentane	0.8495	0.0022	1.4710	0.0062	0.0983	0.0047
n-Pentane	0.9602	0.0024	1.6627	0.0070	0.1100	0.0053
n-Hexane	1.4698	0.0037	3.0399	0.0128	0.1911	0.0092
Nitrogen	5.5989	0.0143	3.7642	0.0158	0.1945	0.0093
CO2	9.4151	0.0240	9.9445	0.0419	0.5020	0.0241
H2S	0.0006	0.0000	0.0005	0.0000	0.0000	0.0000
H2O	106.6990	0.2721	46.1326	0.1942	1.9261	0.0925
NBP[1]95*	0.2883	0.0007	0.4699	0.0020	0.0288	0.0014
NBP[1]121*	0.3381	0.0009	0.5912	0.0025	0.0358	0.0017
NBP[1]147*	0.4314	0.0011	0.8304	0.0035	0.0494	0.0024
NBP[1]171*	0.8224	0.0021	1.7306	0.0073	0.1013	0.0049
NBP[1]195*	1.0758	0.0027	2.4160	0.0102	0.1398	0.0067
NBP[1]222*	0.8003	0.0020	1.9331	0.0081	0.1105	0.0053
NBP[1]248*	0.6657	0.0017	1.7287	0.0073	0.0976	0.0047
NBP[1]273*	0.5358	0.0014	1.4881	0.0063	0.0831	0.0040
NBP[1]299*	0.4185	0.0011	1.2393	0.0052	0.0684	0.0033
NBP[1]325*	0.3029	0.0008	0.9528	0.0040	0.0521	0.0025
NBP[1]351*	0.2456	0.0006	0.8214	0.0035	0.0445	0.0021
NBP[1]377*	0.2247	0.0006	0.8014	0.0034	0.0429	0.0021
NBP[1]402*	0.2061	0.0005	0.7838	0.0033	0.0416	0.0020
NBP[1]428*	0.1961	0.0005	0.7956	0.0033	0.0418	0.0020
NBP[1]454*	0.1956	0.0005	0.8480	0.0036	0.0441	0.0021
NBP[1]480*	0.1982	0.0005	0.9182	0.0039	0.0473	0.0023
NBP[1]505*	0.1920	0.0005	0.9484	0.0040	0.0484	0.0023
NBP[1]531*	0.1852	0.0005	0.9740	0.0041	0.0492	0.0024
NBP[1]557*	0.1784	0.0005	0.9978	0.0042	0.0500	0.0024
NBP[1]582*	0.1706	0.0004	1.0132	0.0043	0.0503	0.0024
NBP[1]608*	0.1643	0.0004	1.0351	0.0044	0.0510	0.0025
NBP[1]634*	0.1611	0.0004	1.0753	0.0045	0.0526	0.0025
NBP[1]659*	0.1586	0.0004	1.1194	0.0047	0.0543	0.0026
NBP[1]685*	0.1641	0.0004	1.2227	0.0051	0.0588	0.0028
NBP[1]711*	0.1715	0.0004	1.3445	0.0057	0.0642	0.0031
NBP[1]736*	0.1697	0.0004	1.3915	0.0059	0.0659	0.0032
NBP[1]762*	0.1653	0.0004	1.4214	0.0060	0.0669	0.0032
NBP[1]788*	0.1585	0.0004	1.4424	0.0061	0.0674	0.0032

* Specified by user.

Material Stream: Pandhi (continued)

Fluid Package: Basis-1
Property Package: Peng-Robinson

COMPOSITION

Overall Phase (continued)

Vapour Fraction 0.6833

COMPONENTS	MOLAR FLOW (kgmole/h)	MOLE FRACTION	MASS FLOW (tonne/d)	MASS FRACTION	LIQUID VOLUME FLOW (m3/h)	LIQUID VOLUME FRACTION
NBP[1]825*	0.2655	0.0007	2.5963	0.0109	0.1201	0.0058
NBP[1]873*	0.1830	0.0005	1.9404	0.0082	0.0887	0.0043
NBP[1]926*	0.1437	0.0004	1.6472	0.0069	0.0744	0.0036
NBP[1]978*	0.1474	0.0004	1.8524	0.0078	0.0825	0.0040
NBP[1]1021*	0.0728	0.0002	0.9655	0.0041	0.0426	0.0020
NBP[1]1075*	0.0449	0.0001	0.6310	0.0027	0.0276	0.0013
NBP[1]1123*	0.0417	0.0001	0.6267	0.0026	0.0271	0.0013
NBP[1]1173*	0.0300	0.0001	0.4772	0.0020	0.0205	0.0010
NBP[1]1250*	0.0393	0.0001	0.6767	0.0028	0.0287	0.0014
NBP[1]1339*	0.0364	0.0001	0.6999	0.0029	0.0291	0.0014
NBP[1]1432*	0.0257	0.0001	0.5397	0.0023	0.0221	0.0011
NBP[1]1528*	0.0180	0.0000	0.4082	0.0017	0.0165	0.0008
NBP[1]1637*	0.0127	0.0000	0.3047	0.0013	0.0122	0.0006
NBP[1]1732*	0.0101	0.0000	0.2565	0.0011	0.0101	0.0005
NBP[1]1819*	0.0097	0.0000	0.2590	0.0011	0.0101	0.0005
NBP[1]1913*	0.0112	0.0000	0.3148	0.0013	0.0121	0.0006
Total	392.1623	1.0000	237.5489	1.0000	20.8162	1.0000

Vapour Phase

Phase Fraction 0.6833

COMPONENTS	MOLAR FLOW (kgmole/h)	MOLE FRACTION	MASS FLOW (tonne/d)	MASS FRACTION	LIQUID VOLUME FLOW (m3/h)	LIQUID VOLUME FRACTION
Methane	204.9954	0.7650	78.9293	0.5739	10.9846	0.6902
Ethane	27.6428	0.1032	19.9492	0.1451	2.3370	0.1468
Propane	13.5786	0.0507	14.3706	0.1045	1.1818	0.0743
i-Butane	1.5846	0.0059	2.2105	0.0161	0.1639	0.0103
n-Butane	2.8799	0.0107	4.0174	0.0292	0.2870	0.0180
i-Pentane	0.4627	0.0017	0.8013	0.0058	0.0536	0.0034
n-Pentane	0.4645	0.0017	0.8044	0.0058	0.0532	0.0033
n-Hexane	0.3692	0.0014	0.7636	0.0056	0.0480	0.0030
Nitrogen	5.5749	0.0208	3.7480	0.0273	0.1937	0.0122
CO2	9.1306	0.0341	9.6441	0.0701	0.4869	0.0306
H2S	0.0005	0.0000	0.0004	0.0000	0.0000	0.0000
H2O	0.3934	0.0015	0.1701	0.0012	0.0071	0.0004
NBP[1]95*	0.1423	0.0005	0.2320	0.0017	0.0142	0.0009
NBP[1]121*	0.1317	0.0005	0.2302	0.0017	0.0139	0.0009
NBP[1]147*	0.1253	0.0005	0.2411	0.0018	0.0143	0.0009
NBP[1]171*	0.1732	0.0006	0.3645	0.0027	0.0213	0.0013
NBP[1]195*	0.1580	0.0006	0.3548	0.0026	0.0205	0.0013
NBP[1]222*	0.0733	0.0003	0.1771	0.0013	0.0101	0.0006
NBP[1]248*	0.0376	0.0001	0.0977	0.0007	0.0055	0.0003
NBP[1]273*	0.0182	0.0001	0.0505	0.0004	0.0028	0.0002
NBP[1]299*	0.0083	0.0000	0.0246	0.0002	0.0014	0.0001
NBP[1]325*	0.0034	0.0000	0.0106	0.0001	0.0006	0.0000
NBP[1]351*	0.0015	0.0000	0.0050	0.0000	0.0003	0.0000
NBP[1]377*	0.0007	0.0000	0.0026	0.0000	0.0001	0.0000
NBP[1]402*	0.0003	0.0000	0.0013	0.0000	0.0001	0.0000
NBP[1]428*	0.0002	0.0000	0.0007	0.0000	0.0000	0.0000
NBP[1]454*	0.0001	0.0000	0.0004	0.0000	0.0000	0.0000
NBP[1]480*	0.0000	0.0000	0.0002	0.0000	0.0000	0.0000
NBP[1]505*	0.0000	0.0000	0.0001	0.0000	0.0000	0.0000
NBP[1]531*	0.0000	0.0000	0.0000	0.0000	0.0000	0.0000
NBP[1]557*	0.0000	0.0000	0.0000	0.0000	0.0000	0.0000
NBP[1]582*	0.0000	0.0000	0.0000	0.0000	0.0000	0.0000
NBP[1]608*	0.0000	0.0000	0.0000	0.0000	0.0000	0.0000

* Specified by user.

Material Stream: Pandhi (continued)

Fluid Package: Basis-1
Property Package: Peng-Robinson

COMPOSITION

Vapour Phase (continued)

Phase Fraction 0.6833

COMPONENTS	MOLAR FLOW (kgmole/h)	MOLE FRACTION	MASS FLOW (tonne/d)	MASS FRACTION	LIQUID VOLUME FLOW (m3/h)	LIQUID VOLUME FRACTION
NBP[1]634*	0.0000	0.0000	0.0000	0.0000	0.0000	0.0000
NBP[1]659*	0.0000	0.0000	0.0000	0.0000	0.0000	0.0000
NBP[1]685*	0.0000	0.0000	0.0000	0.0000	0.0000	0.0000
NBP[1]711*	0.0000	0.0000	0.0000	0.0000	0.0000	0.0000
NBP[1]736*	0.0000	0.0000	0.0000	0.0000	0.0000	0.0000
NBP[1]762*	0.0000	0.0000	0.0000	0.0000	0.0000	0.0000
NBP[1]788*	0.0000	0.0000	0.0000	0.0000	0.0000	0.0000
NBP[1]825*	0.0000	0.0000	0.0000	0.0000	0.0000	0.0000
NBP[1]873*	0.0000	0.0000	0.0000	0.0000	0.0000	0.0000
NBP[1]926*	0.0000	0.0000	0.0000	0.0000	0.0000	0.0000
NBP[1]978*	0.0000	0.0000	0.0000	0.0000	0.0000	0.0000
NBP[1]1021*	0.0000	0.0000	0.0000	0.0000	0.0000	0.0000
NBP[1]1075*	0.0000	0.0000	0.0000	0.0000	0.0000	0.0000
NBP[1]1123*	0.0000	0.0000	0.0000	0.0000	0.0000	0.0000
NBP[1]1173*	0.0000	0.0000	0.0000	0.0000	0.0000	0.0000
NBP[1]1250*	0.0000	0.0000	0.0000	0.0000	0.0000	0.0000
NBP[1]1339*	0.0000	0.0000	0.0000	0.0000	0.0000	0.0000
NBP[1]1432*	0.0000	0.0000	0.0000	0.0000	0.0000	0.0000
NBP[1]1528*	0.0000	0.0000	0.0000	0.0000	0.0000	0.0000
NBP[1]1637*	0.0000	0.0000	0.0000	0.0000	0.0000	0.0000
NBP[1]1732*	0.0000	0.0000	0.0000	0.0000	0.0000	0.0000
NBP[1]1819*	0.0001	0.0000	0.0033	0.0000	0.0001	0.0000
NBP[1]1913*	0.0112	0.0000	0.3148	0.0023	0.0121	0.0008
Total	267.9625	1.0000	137.5201	1.0000	15.9142	1.0000

Liquid Phase

Phase Fraction 4.555e-002

COMPONENTS	MOLAR FLOW (kgmole/h)	MOLE FRACTION	MASS FLOW (tonne/d)	MASS FRACTION	LIQUID VOLUME FLOW (m3/h)	LIQUID VOLUME FRACTION
Methane	2.0486	0.1147	0.7888	0.0146	0.1098	0.0368
Ethane	1.1578	0.0648	0.8356	0.0155	0.0979	0.0328
Propane	1.6892	0.0946	1.7877	0.0331	0.1470	0.0493
i-Butane	0.4441	0.0249	0.6195	0.0115	0.0459	0.0154
n-Butane	1.0714	0.0600	1.4946	0.0277	0.1068	0.0358
i-Pentane	0.3868	0.0217	0.6697	0.0124	0.0448	0.0150
n-Pentane	0.4957	0.0278	0.8584	0.0159	0.0568	0.0191
n-Hexane	1.1006	0.0616	2.2764	0.0421	0.1431	0.0480
Nitrogen	0.0232	0.0013	0.0156	0.0003	0.0008	0.0003
CO2	0.2419	0.0135	0.2555	0.0047	0.0129	0.0043
H2S	0.0000	0.0000	0.0000	0.0000	0.0000	0.0000
H2O	0.0108	0.0006	0.0047	0.0001	0.0002	0.0001
NBP[1]95*	0.1460	0.0082	0.2380	0.0044	0.0146	0.0049
NBP[1]121*	0.2065	0.0116	0.3610	0.0067	0.0218	0.0073
NBP[1]147*	0.3062	0.0171	0.5893	0.0109	0.0350	0.0118
NBP[1]171*	0.6492	0.0363	1.3661	0.0253	0.0800	0.0268
NBP[1]195*	0.9178	0.0514	2.0612	0.0382	0.1193	0.0400
NBP[1]222*	0.7270	0.0407	1.7560	0.0325	0.1004	0.0337
NBP[1]248*	0.6280	0.0352	1.6311	0.0302	0.0921	0.0309
NBP[1]273*	0.5176	0.0290	1.4376	0.0266	0.0803	0.0269
NBP[1]299*	0.4102	0.0230	1.2147	0.0225	0.0671	0.0225
NBP[1]325*	0.2995	0.0168	0.9422	0.0174	0.0515	0.0173
NBP[1]351*	0.2441	0.0137	0.8164	0.0151	0.0442	0.0148
NBP[1]377*	0.2240	0.0125	0.7988	0.0148	0.0428	0.0144
NBP[1]402*	0.2058	0.0115	0.7825	0.0145	0.0415	0.0139
NBP[1]428*	0.1959	0.0110	0.7949	0.0147	0.0417	0.0140

* Specified by user.

Material Stream: Pandhi (continued)

Fluid Package: Basis-1
Property Package: Peng-Robinson

COMPOSITION

Liquid Phase (continued)

Phase Fraction 4.555e-002

COMPONENTS	MOLAR FLOW (kgmole/h)	MOLE FRACTION	MASS FLOW (tonne/d)	MASS FRACTION	LIQUID VOLUME FLOW (m3/h)	LIQUID VOLUME FRACTION
NBP[1]454*	0.1955	0.0109	0.8477	0.0157	0.0441	0.0148
NBP[1]480*	0.1981	0.0111	0.9180	0.0170	0.0473	0.0159
NBP[1]505*	0.1920	0.0107	0.9483	0.0176	0.0484	0.0162
NBP[1]531*	0.1852	0.0104	0.9740	0.0180	0.0492	0.0165
NBP[1]557*	0.1784	0.0100	0.9978	0.0185	0.0500	0.0168
NBP[1]582*	0.1706	0.0095	1.0132	0.0188	0.0503	0.0169
NBP[1]608*	0.1643	0.0092	1.0351	0.0192	0.0510	0.0171
NBP[1]634*	0.1611	0.0090	1.0753	0.0199	0.0526	0.0176
NBP[1]659*	0.1586	0.0089	1.1194	0.0207	0.0543	0.0182
NBP[1]685*	0.1641	0.0092	1.2227	0.0226	0.0588	0.0197
NBP[1]711*	0.1715	0.0096	1.3445	0.0249	0.0642	0.0215
NBP[1]736*	0.1697	0.0095	1.3915	0.0258	0.0659	0.0221
NBP[1]762*	0.1653	0.0093	1.4214	0.0263	0.0669	0.0224
NBP[1]788*	0.1585	0.0089	1.4424	0.0267	0.0674	0.0226
NBP[1]825*	0.2655	0.0149	2.5963	0.0481	0.1201	0.0403
NBP[1]873*	0.1830	0.0102	1.9404	0.0359	0.0887	0.0298
NBP[1]926*	0.1437	0.0080	1.6472	0.0305	0.0744	0.0250
NBP[1]978*	0.1474	0.0082	1.8524	0.0343	0.0825	0.0277
NBP[1]1021*	0.0728	0.0041	0.9655	0.0179	0.0426	0.0143
NBP[1]1075*	0.0449	0.0025	0.6310	0.0117	0.0276	0.0093
NBP[1]1123*	0.0417	0.0023	0.6267	0.0116	0.0271	0.0091
NBP[1]1173*	0.0300	0.0017	0.4772	0.0088	0.0205	0.0069
NBP[1]1250*	0.0393	0.0022	0.6767	0.0125	0.0287	0.0096
NBP[1]1339*	0.0364	0.0020	0.6999	0.0130	0.0291	0.0098
NBP[1]1432*	0.0257	0.0014	0.5397	0.0100	0.0221	0.0074
NBP[1]1528*	0.0180	0.0010	0.4082	0.0076	0.0165	0.0055
NBP[1]1637*	0.0127	0.0007	0.3047	0.0056	0.0122	0.0041
NBP[1]1732*	0.0101	0.0006	0.2565	0.0047	0.0101	0.0034
NBP[1]1819*	0.0096	0.0005	0.2557	0.0047	0.0100	0.0033
NBP[1]1913*	0.0000	0.0000	0.0000	0.0000	0.0000	0.0000
Total	17.8617	1.0000	54.0255	1.0000	2.9809	1.0000

Aqueous Phase

Phase Fraction 0.2712

COMPONENTS	MOLAR FLOW (kgmole/h)	MOLE FRACTION	MASS FLOW (tonne/d)	MASS FRACTION	LIQUID VOLUME FLOW (m3/h)	LIQUID VOLUME FRACTION
Methane	0.0000	0.0000	0.0000	0.0000	0.0000	0.0000
Ethane	0.0000	0.0000	0.0000	0.0000	0.0000	0.0000
Propane	0.0000	0.0000	0.0000	0.0000	0.0000	0.0000
i-Butane	0.0000	0.0000	0.0000	0.0000	0.0000	0.0000
n-Butane	0.0000	0.0000	0.0000	0.0000	0.0000	0.0000
i-Pentane	0.0000	0.0000	0.0000	0.0000	0.0000	0.0000
n-Pentane	0.0000	0.0000	0.0000	0.0000	0.0000	0.0000
n-Hexane	0.0000	0.0000	0.0000	0.0000	0.0000	0.0000
Nitrogen	0.0008	0.0000	0.0006	0.0000	0.0000	0.0000
CO2	0.0425	0.0004	0.0449	0.0010	0.0023	0.0012
H2S	0.0000	0.0000	0.0000	0.0000	0.0000	0.0000
H2O	106.2948	0.9996	45.9579	0.9990	1.9188	0.9988
NBP[1]95*	0.0000	0.0000	0.0000	0.0000	0.0000	0.0000
NBP[1]121*	0.0000	0.0000	0.0000	0.0000	0.0000	0.0000
NBP[1]147*	0.0000	0.0000	0.0000	0.0000	0.0000	0.0000
NBP[1]171*	0.0000	0.0000	0.0000	0.0000	0.0000	0.0000
NBP[1]195*	0.0000	0.0000	0.0000	0.0000	0.0000	0.0000
NBP[1]222*	0.0000	0.0000	0.0000	0.0000	0.0000	0.0000
NBP[1]248*	0.0000	0.0000	0.0000	0.0000	0.0000	0.0000

* Specified by user.

Material Stream: Pandhi (continued)

Fluid Package: Basis-1
Property Package: Peng-Robinson

COMPOSITION

Aqueous Phase (continued)

Phase Fraction 0.2712

COMPONENTS	MOLAR FLOW (kgmole/h)	MOLE FRACTION	MASS FLOW (tonne/d)	MASS FRACTION	LIQUID VOLUME FLOW (m3/h)	LIQUID VOLUME FRACTION
NBP[1]273*	0.0000	0.0000	0.0000	0.0000	0.0000	0.0000
NBP[1]299*	0.0000	0.0000	0.0000	0.0000	0.0000	0.0000
NBP[1]325*	0.0000	0.0000	0.0000	0.0000	0.0000	0.0000
NBP[1]351*	0.0000	0.0000	0.0000	0.0000	0.0000	0.0000
NBP[1]377*	0.0000	0.0000	0.0000	0.0000	0.0000	0.0000
NBP[1]402*	0.0000	0.0000	0.0000	0.0000	0.0000	0.0000
NBP[1]428*	0.0000	0.0000	0.0000	0.0000	0.0000	0.0000
NBP[1]454*	0.0000	0.0000	0.0000	0.0000	0.0000	0.0000
NBP[1]480*	0.0000	0.0000	0.0000	0.0000	0.0000	0.0000
NBP[1]505*	0.0000	0.0000	0.0000	0.0000	0.0000	0.0000
NBP[1]531*	0.0000	0.0000	0.0000	0.0000	0.0000	0.0000
NBP[1]557*	0.0000	0.0000	0.0000	0.0000	0.0000	0.0000
NBP[1]582*	0.0000	0.0000	0.0000	0.0000	0.0000	0.0000
NBP[1]608*	0.0000	0.0000	0.0000	0.0000	0.0000	0.0000
NBP[1]634*	0.0000	0.0000	0.0000	0.0000	0.0000	0.0000
NBP[1]659*	0.0000	0.0000	0.0000	0.0000	0.0000	0.0000
NBP[1]685*	0.0000	0.0000	0.0000	0.0000	0.0000	0.0000
NBP[1]711*	0.0000	0.0000	0.0000	0.0000	0.0000	0.0000
NBP[1]736*	0.0000	0.0000	0.0000	0.0000	0.0000	0.0000
NBP[1]762*	0.0000	0.0000	0.0000	0.0000	0.0000	0.0000
NBP[1]788*	0.0000	0.0000	0.0000	0.0000	0.0000	0.0000
NBP[1]825*	0.0000	0.0000	0.0000	0.0000	0.0000	0.0000
NBP[1]873*	0.0000	0.0000	0.0000	0.0000	0.0000	0.0000
NBP[1]926*	0.0000	0.0000	0.0000	0.0000	0.0000	0.0000
NBP[1]978*	0.0000	0.0000	0.0000	0.0000	0.0000	0.0000
NBP[1]1021*	0.0000	0.0000	0.0000	0.0000	0.0000	0.0000
NBP[1]1075*	0.0000	0.0000	0.0000	0.0000	0.0000	0.0000
NBP[1]1123*	0.0000	0.0000	0.0000	0.0000	0.0000	0.0000
NBP[1]1173*	0.0000	0.0000	0.0000	0.0000	0.0000	0.0000
NBP[1]1250*	0.0000	0.0000	0.0000	0.0000	0.0000	0.0000
NBP[1]1339*	0.0000	0.0000	0.0000	0.0000	0.0000	0.0000
NBP[1]1432*	0.0000	0.0000	0.0000	0.0000	0.0000	0.0000
NBP[1]1528*	0.0000	0.0000	0.0000	0.0000	0.0000	0.0000
NBP[1]1637*	0.0000	0.0000	0.0000	0.0000	0.0000	0.0000
NBP[1]1732*	0.0000	0.0000	0.0000	0.0000	0.0000	0.0000
NBP[1]1819*	0.0000	0.0000	0.0000	0.0000	0.0000	0.0000
NBP[1]1913*	0.0000	0.0000	0.0000	0.0000	0.0000	0.0000
Total	106.3381	1.0000	46.0033	1.0000	1.9211	1.0000

Material Stream: PANDHI oil

Fluid Package: Basis-1
Property Package: Peng-Robinson

CONDITIONS

		Overall				
Vapour / Phase Fraction		---				
Temperature:	(F)	---				
Pressure:	(psig)	450.0 *				
Molar Flow	(MMSCFD)	0.1957				
Mass Flow	(tonne/d)	45.85				
Std Ideal Liq Vol Flow	(barrel/day)	346.1				
Molar Enthalpy	(kJ/kgmole)	---				
Molar Entropy	(kJ/kgmole-C)	---				
Heat Flow	(MMBtu/hr)	---				
Liq Vol Flow @Std Cond	(barrel/day)	346.1 *				

* Specified by user.

Material Stream: PANDHI oil (continued)

Fluid Package: Basis-1
Property Package: Peng-Robinson

PROPERTIES

		Overall				
Molecular Weight		196.0				
Molar Density	(kgmole/m3)	---				
Mass Density	(kg/m3)	---				
Act. Volume Flow	(barrel/day)	---				
Mass Enthalpy	(kJ/kg)	---				
Mass Entropy	(kJ/kg-C)	---				
Heat Capacity	(kJ/kgmole-C)	---				
Mass Heat Capacity	(kJ/kg-C)	---				
LHV Molar Basis (Std)	(Btu/SCF)	---				
LHV Mass Basis (Std)	(kJ/kg)	---				
Phase Fraction [Vol. Basis]		0.0000				
Phase Fraction [Mass Basis]		0.0000				
Partial Pressure of CO2	(psig)	-14.70				
Cost Based on Flow	(Cost/s)	0.0000				
Act. Gas Flow	(ACT_m3/h)	---				
Avg. Liq. Density	(kgmole/m3)	4.251				
Specific Heat	(kJ/kgmole-C)	---				
Std. Gas Flow	(STD_m3/h)	230.4				
Std. Ideal Liq. Mass Density	(kg/m3)	833.3				
Act. Liq. Flow	(barrel/day)	---				
Z Factor		---				
Watson K		11.77				
User Property		---				
Partial Pressure of H2S	(psig)	-14.70				
Cp/(Cp - R)		---				
Cp/Cv		---				
Heat of Vap.	(kJ/kgmole)	---				
Kinematic Viscosity	(cSt)	---				
Liq. Mass Density (Std. Cond)	(kg/m3)	833.3				
Liq. Vol. Flow (Std. Cond)	(barrel/day)	346.1				
Liquid Fraction		---				
Molar Volume	(m3/kgmole)	---				
Mass Heat of Vap.	(kJ/kg)	---				
Phase Fraction [Molar Basis]		---				
Surface Tension	(dyne/cm)	---				
Thermal Conductivity	(W/m-K)	---				
Viscosity	(cP)	---				
Cv (Semi-Ideal)	(kJ/kgmole-C)	---				
Mass Cv (Semi-Ideal)	(kJ/kg-C)	---				
Cv	(kJ/kgmole-C)	---				
Mass Cv	(kJ/kg-C)	---				
Cv (Ent. Method)	(kJ/kgmole-C)	---				
Mass Cv (Ent. Method)	(kJ/kg-C)	---				
Cp/Cv (Ent. Method)		---				
Reid VP at 37.8 C	(psig)	---				
True VP at 37.8 C	(psig)	---				
Liq. Vol. Flow - Sum(Std. Cond)	(barrel/day)	0.0000				
HHV Molar Basis (Std)	(Btu/SCF)	---				
HHV Mass Basis (Std)	(kJ/kg)	---				
CO2 Loading		---				
CO2 App ML Con	(kgmole/m3)	---				
CO2 App WT Con	(kgmol/kg)	0.0000				
Phase Fraction [Act. Vol. Basis]		0.0000				
Mass Exergy	(kJ/kg)	9.739e+006				
Viscosity Index		---				
Ideal Gas Cp/Cv		1.000				
Ideal Gas Cp	(kJ/kgmole-C)	-5.304e+005				

Licensed to: PETROCHEMICAL ENGINEERIN
* Specified by user.

Material Stream: PANDHI oil (continued)

Fluid Package: Basis-1
Property Package: Peng-Robinson

PROPERTIES

	Overall				
Mass Ideal Gas Cp (kJ/kg-C)	-2706				
Bubble Point Pressure (psig)	---				

COMPOSITION

Overall Phase

Vapour Fraction ---

COMPONENTS	MOLAR FLOW (kgmole/h)	MOLE FRACTION	MASS FLOW (tonne/d)	MASS FRACTION	LIQUID VOLUME FLOW (m3/h)	LIQUID VOLUME FRACTION
Methane	0.0000 *	0.0000 *	0.0000 *	0.0000 *	0.0000 *	0.0000 *
Ethane	0.0000 *	0.0000 *	0.0000 *	0.0000 *	0.0000 *	0.0000 *
Propane	0.0000 *	0.0000 *	0.0000 *	0.0000 *	0.0000 *	0.0000 *
i-Butane	0.0000 *	0.0000 *	0.0000 *	0.0000 *	0.0000 *	0.0000 *
n-Butane	0.0000 *	0.0000 *	0.0000 *	0.0000 *	0.0000 *	0.0000 *
i-Pentane	0.0000 *	0.0000 *	0.0000 *	0.0000 *	0.0000 *	0.0000 *
n-Pentane	0.0000 *	0.0000 *	0.0000 *	0.0000 *	0.0000 *	0.0000 *
n-Hexane	0.0000 *	0.0000 *	0.0000 *	0.0000 *	0.0000 *	0.0000 *
Nitrogen	0.0000 *	0.0000 *	0.0000 *	0.0000 *	0.0000 *	0.0000 *
CO2	0.0000 *	0.0000 *	0.0000 *	0.0000 *	0.0000 *	0.0000 *
H2S	0.0000 *	0.0000 *	0.0000 *	0.0000 *	0.0000 *	0.0000 *
H2O	0.0000 *	0.0000 *	0.0000 *	0.0000 *	0.0000 *	0.0000 *
NBP[1]95*	0.2390 *	0.0245 *	0.3897 *	0.0085 *	0.0239 *	0.0104 *
NBP[1]121*	0.2888 *	0.0296 *	0.5049 *	0.0110 *	0.0305 *	0.0133 *
NBP[1]147*	0.3822 *	0.0392 *	0.7356 *	0.0160 *	0.0437 *	0.0191 *
NBP[1]171*	0.7533 *	0.0773 *	1.5851 *	0.0346 *	0.0928 *	0.0405 *
NBP[1]195*	1.0134 *	0.1040 *	2.2759 *	0.0496 *	0.1317 *	0.0574 *
NBP[1]222*	0.7725 *	0.0793 *	1.8658 *	0.0407 *	0.1066 *	0.0465 *
NBP[1]248*	0.6522 *	0.0669 *	1.6937 *	0.0369 *	0.0956 *	0.0417 *
NBP[1]273*	0.5297 *	0.0544 *	1.4712 *	0.0321 *	0.0821 *	0.0358 *
NBP[1]299*	0.4159 *	0.0427 *	1.2317 *	0.0269 *	0.0680 *	0.0297 *
NBP[1]325*	0.3019 *	0.0310 *	0.9498 *	0.0207 *	0.0519 *	0.0227 *
NBP[1]351*	0.2452 *	0.0252 *	0.8201 *	0.0179 *	0.0444 *	0.0194 *
NBP[1]377*	0.2246 *	0.0230 *	0.8008 *	0.0175 *	0.0429 *	0.0187 *
NBP[1]402*	0.2060 *	0.0211 *	0.7836 *	0.0171 *	0.0416 *	0.0181 *
NBP[1]428*	0.1960 *	0.0201 *	0.7954 *	0.0173 *	0.0418 *	0.0182 *
NBP[1]454*	0.1956 *	0.0201 *	0.8479 *	0.0185 *	0.0441 *	0.0192 *
NBP[1]480*	0.1982 *	0.0203 *	0.9181 *	0.0200 *	0.0473 *	0.0206 *
NBP[1]505*	0.1920 *	0.0197 *	0.9484 *	0.0207 *	0.0484 *	0.0211 *
NBP[1]531*	0.1852 *	0.0190 *	0.9740 *	0.0212 *	0.0492 *	0.0215 *
NBP[1]557*	0.1784 *	0.0183 *	0.9978 *	0.0218 *	0.0500 *	0.0218 *
NBP[1]582*	0.1706 *	0.0175 *	1.0132 *	0.0221 *	0.0503 *	0.0220 *
NBP[1]608*	0.1643 *	0.0169 *	1.0351 *	0.0226 *	0.0510 *	0.0222 *
NBP[1]634*	0.1611 *	0.0165 *	1.0753 *	0.0235 *	0.0526 *	0.0229 *
NBP[1]659*	0.1586 *	0.0163 *	1.1194 *	0.0244 *	0.0543 *	0.0237 *
NBP[1]685*	0.1641 *	0.0168 *	1.2227 *	0.0267 *	0.0588 *	0.0257 *
NBP[1]711*	0.1715 *	0.0176 *	1.3445 *	0.0293 *	0.0642 *	0.0280 *
NBP[1]736*	0.1697 *	0.0174 *	1.3915 *	0.0303 *	0.0659 *	0.0288 *
NBP[1]762*	0.1653 *	0.0170 *	1.4214 *	0.0310 *	0.0669 *	0.0292 *
NBP[1]788*	0.1585 *	0.0163 *	1.4424 *	0.0315 *	0.0674 *	0.0294 *
NBP[1]825*	0.2655 *	0.0272 *	2.5963 *	0.0566 *	0.1201 *	0.0524 *
NBP[1]873*	0.1830 *	0.0188 *	1.9404 *	0.0423 *	0.0887 *	0.0387 *
NBP[1]926*	0.1437 *	0.0147 *	1.6472 *	0.0359 *	0.0744 *	0.0325 *
NBP[1]978*	0.1474 *	0.0151 *	1.8524 *	0.0404 *	0.0825 *	0.0360 *
NBP[1]1021*	0.0728 *	0.0075 *	0.9655 *	0.0211 *	0.0426 *	0.0186 *
NBP[1]1075*	0.0449 *	0.0046 *	0.6310 *	0.0138 *	0.0276 *	0.0120 *
NBP[1]1123*	0.0417 *	0.0043 *	0.6267 *	0.0137 *	0.0271 *	0.0118 *
NBP[1]1173*	0.0300 *	0.0031 *	0.4772 *	0.0104 *	0.0205 *	0.0089 *
NBP[1]1250*	0.0393 *	0.0040 *	0.6767 *	0.0148 *	0.0287 *	0.0125 *

Licensed to: PETROCHEMICAL ENGINEERIN
* Specified by user.

Material Stream: PANDHI oil (continued)

Fluid Package: Basis-1
Property Package: Peng-Robinson

COMPOSITION

Overall Phase (continued)

Vapour Fraction ---

COMPONENTS	MOLAR FLOW (kgmole/h)	MOLE FRACTION	MASS FLOW (tonne/d)	MASS FRACTION	LIQUID VOLUME FLOW (m3/h)	LIQUID VOLUME FRACTION
NBP[1]1339*	0.0364 *	0.0037 *	0.6999 *	0.0153 *	0.0291 *	0.0127 *
NBP[1]1432*	0.0257 *	0.0026 *	0.5397 *	0.0118 *	0.0221 *	0.0097 *
NBP[1]1528*	0.0180 *	0.0018 *	0.4082 *	0.0089 *	0.0165 *	0.0072 *
NBP[1]1637*	0.0127 *	0.0013 *	0.3047 *	0.0066 *	0.0122 *	0.0053 *
NBP[1]1732*	0.0101 *	0.0010 *	0.2565 *	0.0056 *	0.0101 *	0.0044 *
NBP[1]1819*	0.0097 *	0.0010 *	0.2590 *	0.0056 *	0.0101 *	0.0044 *
NBP[1]1913*	0.0112 *	0.0011 *	0.3148 *	0.0069 *	0.0121 *	0.0053 *
Total	9.7460	1.0000	45.8513	1.0000	2.2926	1.0000

Material Stream: Pandhi-C

Fluid Package: Basis-1
Property Package: Peng-Robinson

CONDITIONS

		Overall	Vapour Phase	Liquid Phase	Aqueous Phase
Vapour / Phase Fraction		0.0000	0.0000	1.0000	0.0000
Temperature:	(F)	84.79	84.79	84.79	84.79
Pressure:	(psig)	445.0	445.0	445.0	445.0
Molar Flow	(MMSCFD)	0.3574	0.0000	0.3574	0.0000
Mass Flow	(tonne/d)	53.98	0.0000	53.98	0.0000
Std Ideal Liq Vol Flow	(barrel/day)	449.3	0.0000	449.3	0.0000
Molar Enthalpy	(kJ/kgmole)	-2.875e+005	-8.928e+004	-2.875e+005	-2.859e+005
Molar Entropy	(kJ/kgmole-C)	218.7	159.3	218.7	54.83
Heat Flow	(MMBtu/hr)	-4.850	0.0000	-4.850	0.0000
Liq Vol Flow @Std Cond	(barrel/day)	434.3 *	0.0000	434.3	0.0000

PROPERTIES

		Overall	Vapour Phase	Liquid Phase	Aqueous Phase
Molecular Weight		126.4	21.39	126.4	18.03
Molar Density	(kgmole/m3)	6.079	1.408	6.079	55.76
Mass Density	(kg/m3)	768.1	30.10	768.1	1005
Act. Volume Flow	(barrel/day)	442.0	0.0000	442.0	0.0000
Mass Enthalpy	(kJ/kg)	-2275	-4175	-2275	-1.586e+004
Mass Entropy	(kJ/kg-C)	1.731	7.448	1.731	3.042
Heat Capacity	(kJ/kgmole-C)	253.8	47.13	253.8	77.64
Mass Heat Capacity	(kJ/kg-C)	2.009	2.204	2.009	4.307
LHV Molar Basis (Std)	(Btu/SCF)	---	---	---	1.809e-004
LHV Mass Basis (Std)	(kJ/kg)	---	---	---	8.858e-003
Phase Fraction [Vol. Basis]		---	---	1.000	---
Phase Fraction [Mass Basis]		0.0000	0.0000	1.000	0.0000
Partial Pressure of CO2	(psig)	-14.70	---	---	---
Cost Based on Flow	(Cost/s)	0.0000	0.0000	0.0000	0.0000
Act. Gas Flow	(ACT_m3/h)	---	---	---	---
Avg. Liq. Density	(kgmole/m3)	5.980	16.84	5.980	55.35
Specific Heat	(kJ/kgmole-C)	253.8	47.13	253.8	77.64
Std. Gas Flow	(STD_m3/h)	420.9	0.0000	420.9	0.0000
Std. Ideal Liq. Mass Density	(kg/m3)	755.6	360.1	755.6	997.8
Act. Liq. Flow	(barrel/day)	442.0	---	442.0	0.0000
Z Factor		---	0.8953	0.2073	2.260e-002
Watson K		11.99	17.28	11.99	8.497
User Property		---	---	---	---
Partial Pressure of H2S	(psig)	-14.70	---	---	---
Cp/(Cp - R)		1.034	1.214	1.034	1.120
Cp/Cv		1.034	1.388	1.034	1.149
Heat of Vap.	(kJ/kgmole)	2.556e+005	---	---	---

* Specified by user.

Material Stream: Pandhi-C (continued)

Fluid Package: Basis-1
Property Package: Peng-Robinson

PROPERTIES

	Overall	Vapour Phase	Liquid Phase	Aqueous Phase
Kinematic Viscosity (cSt)	12.25	0.3993	12.25	0.8047
Liq. Mass Density (Std. Cond) (kg/m3)	781.8	0.9081	781.8	1015
Liq. Vol. Flow (Std. Cond) (barrel/day)	434.3	0.0000	434.3	0.0000
Liquid Fraction	1.000	0.0000	1.000	1.000
Molar Volume (m3/kgmole)	0.1645	0.7104	0.1645	1.793e-002
Mass Heat of Vap. (kJ/kg)	2023	---	---	---
Phase Fraction [Molar Basis]	0.0000	0.0000	1.0000	0.0000
Surface Tension (dyne/cm)	15.96	---	15.96	71.32
Thermal Conductivity (W/m-K)	0.1006	3.302e-002	0.1006	0.6173
Viscosity (cP)	9.409	1.202e-002	9.409	0.8089
Cv (Semi-Ideal) (kJ/kgmole-C)	245.5	38.81	245.5	69.33
Mass Cv (Semi-Ideal) (kJ/kg-C)	1.943	1.815	1.943	3.846
Cv (kJ/kgmole-C)	245.5	33.96	245.5	67.56
Mass Cv (kJ/kg-C)	1.943	1.588	1.943	3.748
Cv (Ent. Method) (kJ/kgmole-C)	---	-3697	---	66.88
Mass Cv (Ent. Method) (kJ/kg-C)	---	-172.9	---	3.711
Cp/Cv (Ent. Method)	---	-1.275e-002	---	1.161
Reid VP at 37.8 C (psig)	97.87	---	97.87	---
True VP at 37.8 C (psig)	475.9	3607	475.9	17.11
Liq. Vol. Flow - Sum(Std. Cond) (barrel/day)	434.3	0.0000	434.3	0.0000
HHV Molar Basis (Std) (Btu/SCF)	---	---	---	46.45
HHV Mass Basis (Std) (kJ/kg)	---	---	---	2274
CO2 Loading	---	---	---	---
CO2 App ML Con (kgmole/m3)	8.172e-002	---	8.172e-002	---
CO2 App WT Con (kgmol/kg)	1.064e-004	---	1.064e-004	---
Phase Fraction [Act. Vol. Basis]	0.0000	0.0000	1.000	0.0000
Mass Exergy (kJ/kg)	19.83	---	---	---
Viscosity Index	24.69	---	---	---
Ideal Gas Cp/Cv	1.043	1.249	1.043	1.329
Ideal Gas Cp (kJ/kgmole-C)	200.0	41.72	200.0	33.60
Mass Ideal Gas Cp (kJ/kg-C)	1.583	1.951	1.583	1.864
Bubble Point Pressure (psig)	445.0	---	---	---

COMPOSITION

Overall Phase

Vapour Fraction 0.0000

COMPONENTS	MOLAR FLOW (kgmole/h)	MOLE FRACTION	MASS FLOW (tonne/d)	MASS FRACTION	LIQUID VOLUME FLOW (m3/h)	LIQUID VOLUME FRACTION
Methane	2.0221	0.1136	0.7786	0.0144	0.1084	0.0364
Ethane	1.1465	0.0644	0.8274	0.0153	0.0969	0.0326
Propane	1.6775	0.0942	1.7753	0.0329	0.1460	0.0490
i-Butane	0.4420	0.0248	0.6166	0.0114	0.0457	0.0154
n-Butane	1.0672	0.0600	1.4887	0.0276	0.1064	0.0357
i-Pentane	0.3860	0.0217	0.6684	0.0124	0.0447	0.0150
n-Pentane	0.4950	0.0278	0.8571	0.0159	0.0567	0.0191
n-Hexane	1.1004	0.0618	2.2760	0.0422	0.1431	0.0481
Nitrogen	0.0228	0.0013	0.0153	0.0003	0.0008	0.0003
CO2	0.2393	0.0134	0.2527	0.0047	0.0128	0.0043
H2S	0.0000	0.0000	0.0000	0.0000	0.0000	0.0000
H2O	0.0107	0.0006	0.0046	0.0001	0.0002	0.0001
NBP[1]95*	0.1457	0.0082	0.2376	0.0044	0.0146	0.0049
NBP[1]121*	0.2063	0.0116	0.3606	0.0067	0.0218	0.0073
NBP[1]147*	0.3061	0.0172	0.5891	0.0109	0.0350	0.0118
NBP[1]171*	0.6492	0.0365	1.3660	0.0253	0.0800	0.0269
NBP[1]195*	0.9179	0.0516	2.0614	0.0382	0.1193	0.0401
NBP[1]222*	0.7271	0.0408	1.7563	0.0325	0.1004	0.0337
NBP[1]248*	0.6282	0.0353	1.6313	0.0302	0.0921	0.0309

* Specified by user.

Material Stream: Pandhi-C (continued)

Fluid Package: Basis-1
Property Package: Peng-Robinson

COMPOSITION

Overall Phase (continued)

Vapour Fraction 0.0000

COMPONENTS	MOLAR FLOW (kgmole/h)	MOLE FRACTION	MASS FLOW (tonne/d)	MASS FRACTION	LIQUID VOLUME FLOW (m3/h)	LIQUID VOLUME FRACTION
NBP[1]273*	0.5177	0.0291	1.4378	0.0266	0.0803	0.0270
NBP[1]299*	0.4103	0.0230	1.2148	0.0225	0.0671	0.0225
NBP[1]325*	0.2995	0.0168	0.9422	0.0175	0.0515	0.0173
NBP[1]351*	0.2442	0.0137	0.8165	0.0151	0.0442	0.0148
NBP[1]377*	0.2240	0.0126	0.7989	0.0148	0.0428	0.0144
NBP[1]402*	0.2058	0.0116	0.7826	0.0145	0.0415	0.0139
NBP[1]428*	0.1959	0.0110	0.7949	0.0147	0.0417	0.0140
NBP[1]454*	0.1955	0.0110	0.8477	0.0157	0.0441	0.0148
NBP[1]480*	0.1981	0.0111	0.9180	0.0170	0.0473	0.0159
NBP[1]505*	0.1920	0.0108	0.9483	0.0176	0.0484	0.0162
NBP[1]531*	0.1852	0.0104	0.9740	0.0180	0.0492	0.0165
NBP[1]557*	0.1784	0.0100	0.9978	0.0185	0.0500	0.0168
NBP[1]582*	0.1706	0.0096	1.0132	0.0188	0.0503	0.0169
NBP[1]608*	0.1643	0.0092	1.0351	0.0192	0.0510	0.0171
NBP[1]634*	0.1611	0.0090	1.0753	0.0199	0.0526	0.0177
NBP[1]659*	0.1586	0.0089	1.1194	0.0207	0.0543	0.0182
NBP[1]685*	0.1641	0.0092	1.2227	0.0227	0.0588	0.0198
NBP[1]711*	0.1715	0.0096	1.3445	0.0249	0.0642	0.0216
NBP[1]736*	0.1697	0.0095	1.3915	0.0258	0.0659	0.0221
NBP[1]762*	0.1653	0.0093	1.4214	0.0263	0.0669	0.0225
NBP[1]788*	0.1585	0.0089	1.4424	0.0267	0.0674	0.0226
NBP[1]825*	0.2655	0.0149	2.5963	0.0481	0.1201	0.0404
NBP[1]873*	0.1830	0.0103	1.9404	0.0359	0.0887	0.0298
NBP[1]926*	0.1437	0.0081	1.6472	0.0305	0.0744	0.0250
NBP[1]978*	0.1474	0.0083	1.8524	0.0343	0.0825	0.0277
NBP[1]1021*	0.0728	0.0041	0.9655	0.0179	0.0426	0.0143
NBP[1]1075*	0.0449	0.0025	0.6310	0.0117	0.0276	0.0093
NBP[1]1123*	0.0417	0.0023	0.6267	0.0116	0.0271	0.0091
NBP[1]1173*	0.0300	0.0017	0.4772	0.0088	0.0205	0.0069
NBP[1]1250*	0.0393	0.0022	0.6767	0.0125	0.0287	0.0096
NBP[1]1339*	0.0364	0.0020	0.6999	0.0130	0.0291	0.0098
NBP[1]1432*	0.0257	0.0014	0.5397	0.0100	0.0221	0.0074
NBP[1]1528*	0.0180	0.0010	0.4082	0.0076	0.0165	0.0055
NBP[1]1637*	0.0127	0.0007	0.3047	0.0056	0.0122	0.0041
NBP[1]1732*	0.0101	0.0006	0.2565	0.0048	0.0101	0.0034
NBP[1]1819*	0.0096	0.0005	0.2561	0.0047	0.0100	0.0034
NBP[1]1913*	0.0000	0.0000	0.0000	0.0000	0.0000	0.0000
Total	17.8012	1.0000	53.9808	1.0000	2.9766	1.0000

Vapour Phase

Phase Fraction 0.0000

COMPONENTS	MOLAR FLOW (kgmole/h)	MOLE FRACTION	MASS FLOW (tonne/d)	MASS FRACTION	LIQUID VOLUME FLOW (m3/h)	LIQUID VOLUME FRACTION
Methane	0.0000	0.7649	0.0000	0.5738	0.0000	0.6901
Ethane	0.0000	0.1032	0.0000	0.1451	0.0000	0.1469
Propane	0.0000	0.0507	0.0000	0.1046	0.0000	0.0743
i-Butane	0.0000	0.0059	0.0000	0.0161	0.0000	0.0103
n-Butane	0.0000	0.0108	0.0000	0.0292	0.0000	0.0181
i-Pentane	0.0000	0.0017	0.0000	0.0058	0.0000	0.0034
n-Pentane	0.0000	0.0017	0.0000	0.0059	0.0000	0.0033
n-Hexane	0.0000	0.0014	0.0000	0.0056	0.0000	0.0030
Nitrogen	0.0000	0.0208	0.0000	0.0272	0.0000	0.0122
CO2	0.0000	0.0341	0.0000	0.0701	0.0000	0.0306
H2S	0.0000	0.0000	0.0000	0.0000	0.0000	0.0000
H2O	0.0000	0.0015	0.0000	0.0012	0.0000	0.0004

* Specified by user.

Material Stream: Pandhi-C (continued)

Fluid Package: Basis-1
Property Package: Peng-Robinson

COMPOSITION

Vapour Phase (continued)

Phase Fraction 0.0000

COMPONENTS	MOLAR FLOW (kgmole/h)	MOLE FRACTION	MASS FLOW (tonne/d)	MASS FRACTION	LIQUID VOLUME FLOW (m3/h)	LIQUID VOLUME FRACTION
NBP[1]95*	0.0000	0.0005	0.0000	0.0017	0.0000	0.0009
NBP[1]121*	0.0000	0.0005	0.0000	0.0017	0.0000	0.0009
NBP[1]147*	0.0000	0.0005	0.0000	0.0018	0.0000	0.0009
NBP[1]171*	0.0000	0.0006	0.0000	0.0027	0.0000	0.0013
NBP[1]195*	0.0000	0.0006	0.0000	0.0026	0.0000	0.0013
NBP[1]222*	0.0000	0.0003	0.0000	0.0013	0.0000	0.0006
NBP[1]248*	0.0000	0.0001	0.0000	0.0007	0.0000	0.0003
NBP[1]273*	0.0000	0.0001	0.0000	0.0004	0.0000	0.0002
NBP[1]299*	0.0000	0.0000	0.0000	0.0002	0.0000	0.0001
NBP[1]325*	0.0000	0.0000	0.0000	0.0001	0.0000	0.0000
NBP[1]351*	0.0000	0.0000	0.0000	0.0000	0.0000	0.0000
NBP[1]377*	0.0000	0.0000	0.0000	0.0000	0.0000	0.0000
NBP[1]402*	0.0000	0.0000	0.0000	0.0000	0.0000	0.0000
NBP[1]428*	0.0000	0.0000	0.0000	0.0000	0.0000	0.0000
NBP[1]454*	0.0000	0.0000	0.0000	0.0000	0.0000	0.0000
NBP[1]480*	0.0000	0.0000	0.0000	0.0000	0.0000	0.0000
NBP[1]505*	0.0000	0.0000	0.0000	0.0000	0.0000	0.0000
NBP[1]531*	0.0000	0.0000	0.0000	0.0000	0.0000	0.0000
NBP[1]557*	0.0000	0.0000	0.0000	0.0000	0.0000	0.0000
NBP[1]582*	0.0000	0.0000	0.0000	0.0000	0.0000	0.0000
NBP[1]608*	0.0000	0.0000	0.0000	0.0000	0.0000	0.0000
NBP[1]634*	0.0000	0.0000	0.0000	0.0000	0.0000	0.0000
NBP[1]659*	0.0000	0.0000	0.0000	0.0000	0.0000	0.0000
NBP[1]685*	0.0000	0.0000	0.0000	0.0000	0.0000	0.0000
NBP[1]711*	0.0000	0.0000	0.0000	0.0000	0.0000	0.0000
NBP[1]736*	0.0000	0.0000	0.0000	0.0000	0.0000	0.0000
NBP[1]762*	0.0000	0.0000	0.0000	0.0000	0.0000	0.0000
NBP[1]788*	0.0000	0.0000	0.0000	0.0000	0.0000	0.0000
NBP[1]825*	0.0000	0.0000	0.0000	0.0000	0.0000	0.0000
NBP[1]873*	0.0000	0.0000	0.0000	0.0000	0.0000	0.0000
NBP[1]926*	0.0000	0.0000	0.0000	0.0000	0.0000	0.0000
NBP[1]978*	0.0000	0.0000	0.0000	0.0000	0.0000	0.0000
NBP[1]1021*	0.0000	0.0000	0.0000	0.0000	0.0000	0.0000
NBP[1]1075*	0.0000	0.0000	0.0000	0.0000	0.0000	0.0000
NBP[1]1123*	0.0000	0.0000	0.0000	0.0000	0.0000	0.0000
NBP[1]1173*	0.0000	0.0000	0.0000	0.0000	0.0000	0.0000
NBP[1]1250*	0.0000	0.0000	0.0000	0.0000	0.0000	0.0000
NBP[1]1339*	0.0000	0.0000	0.0000	0.0000	0.0000	0.0000
NBP[1]1432*	0.0000	0.0000	0.0000	0.0000	0.0000	0.0000
NBP[1]1528*	0.0000	0.0000	0.0000	0.0000	0.0000	0.0000
NBP[1]1637*	0.0000	0.0000	0.0000	0.0000	0.0000	0.0000
NBP[1]1732*	0.0000	0.0000	0.0000	0.0000	0.0000	0.0000
NBP[1]1819*	0.0000	0.0000	0.0000	0.0000	0.0000	0.0000
NBP[1]1913*	0.0000	0.0000	0.0000	0.0023	0.0000	0.0008
Total	0.0000	1.0000	0.0000	1.0000	0.0000	1.0000

Liquid Phase

Phase Fraction 1.000

COMPONENTS	MOLAR FLOW (kgmole/h)	MOLE FRACTION	MASS FLOW (tonne/d)	MASS FRACTION	LIQUID VOLUME FLOW (m3/h)	LIQUID VOLUME FRACTION
Methane	2.0221	0.1136	0.7786	0.0144	0.1084	0.0364
Ethane	1.1465	0.0644	0.8274	0.0153	0.0969	0.0326
Propane	1.6775	0.0942	1.7753	0.0329	0.1460	0.0490
i-Butane	0.4420	0.0248	0.6166	0.0114	0.0457	0.0154
n-Butane	1.0672	0.0600	1.4887	0.0276	0.1064	0.0357

* Specified by user.

Material Stream: Pandhi-C (continued)

Fluid Package: Basis-1
Property Package: Peng-Robinson

COMPOSITION

Liquid Phase (continued)

Phase Fraction 1.000

COMPONENTS	MOLAR FLOW (kgmole/h)	MOLE FRACTION	MASS FLOW (tonne/d)	MASS FRACTION	LIQUID VOLUME FLOW (m3/h)	LIQUID VOLUME FRACTION
i-Pentane	0.3860	0.0217	0.6684	0.0124	0.0447	0.0150
n-Pentane	0.4950	0.0278	0.8571	0.0159	0.0567	0.0191
n-Hexane	1.1004	0.0618	2.2760	0.0422	0.1431	0.0481
Nitrogen	0.0228	0.0013	0.0153	0.0003	0.0008	0.0003
CO2	0.2393	0.0134	0.2527	0.0047	0.0128	0.0043
H2S	0.0000	0.0000	0.0000	0.0000	0.0000	0.0000
H2O	0.0107	0.0006	0.0046	0.0001	0.0002	0.0001
NBP[1]95*	0.1457	0.0082	0.2376	0.0044	0.0146	0.0049
NBP[1]121*	0.2063	0.0116	0.3606	0.0067	0.0218	0.0073
NBP[1]147*	0.3061	0.0172	0.5891	0.0109	0.0350	0.0118
NBP[1]171*	0.6492	0.0365	1.3660	0.0253	0.0800	0.0269
NBP[1]195*	0.9179	0.0516	2.0614	0.0382	0.1193	0.0401
NBP[1]222*	0.7271	0.0408	1.7563	0.0325	0.1004	0.0337
NBP[1]248*	0.6282	0.0353	1.6313	0.0302	0.0921	0.0309
NBP[1]273*	0.5177	0.0291	1.4378	0.0266	0.0803	0.0270
NBP[1]299*	0.4103	0.0230	1.2148	0.0225	0.0671	0.0225
NBP[1]325*	0.2995	0.0168	0.9422	0.0175	0.0515	0.0173
NBP[1]351*	0.2442	0.0137	0.8165	0.0151	0.0442	0.0148
NBP[1]377*	0.2240	0.0126	0.7989	0.0148	0.0428	0.0144
NBP[1]402*	0.2058	0.0116	0.7826	0.0145	0.0415	0.0139
NBP[1]428*	0.1959	0.0110	0.7949	0.0147	0.0417	0.0140
NBP[1]454*	0.1955	0.0110	0.8477	0.0157	0.0441	0.0148
NBP[1]480*	0.1981	0.0111	0.9180	0.0170	0.0473	0.0159
NBP[1]505*	0.1920	0.0108	0.9483	0.0176	0.0484	0.0162
NBP[1]531*	0.1852	0.0104	0.9740	0.0180	0.0492	0.0165
NBP[1]557*	0.1784	0.0100	0.9978	0.0185	0.0500	0.0168
NBP[1]582*	0.1706	0.0096	1.0132	0.0188	0.0503	0.0169
NBP[1]608*	0.1643	0.0092	1.0351	0.0192	0.0510	0.0171
NBP[1]634*	0.1611	0.0090	1.0753	0.0199	0.0526	0.0177
NBP[1]659*	0.1586	0.0089	1.1194	0.0207	0.0543	0.0182
NBP[1]685*	0.1641	0.0092	1.2227	0.0227	0.0588	0.0198
NBP[1]711*	0.1715	0.0096	1.3445	0.0249	0.0642	0.0216
NBP[1]736*	0.1697	0.0095	1.3915	0.0258	0.0659	0.0221
NBP[1]762*	0.1653	0.0093	1.4214	0.0263	0.0669	0.0225
NBP[1]788*	0.1585	0.0089	1.4424	0.0267	0.0674	0.0226
NBP[1]825*	0.2655	0.0149	2.5963	0.0481	0.1201	0.0404
NBP[1]873*	0.1830	0.0103	1.9404	0.0359	0.0887	0.0298
NBP[1]926*	0.1437	0.0081	1.6472	0.0305	0.0744	0.0250
NBP[1]978*	0.1474	0.0083	1.8524	0.0343	0.0825	0.0277
NBP[1]1021*	0.0728	0.0041	0.9655	0.0179	0.0426	0.0143
NBP[1]1075*	0.0449	0.0025	0.6310	0.0117	0.0276	0.0093
NBP[1]1123*	0.0417	0.0023	0.6267	0.0116	0.0271	0.0091
NBP[1]1173*	0.0300	0.0017	0.4772	0.0088	0.0205	0.0069
NBP[1]1250*	0.0393	0.0022	0.6767	0.0125	0.0287	0.0096
NBP[1]1339*	0.0364	0.0020	0.6999	0.0130	0.0291	0.0098
NBP[1]1432*	0.0257	0.0014	0.5397	0.0100	0.0221	0.0074
NBP[1]1528*	0.0180	0.0010	0.4082	0.0076	0.0165	0.0055
NBP[1]1637*	0.0127	0.0007	0.3047	0.0056	0.0122	0.0041
NBP[1]1732*	0.0101	0.0006	0.2565	0.0048	0.0101	0.0034
NBP[1]1819*	0.0096	0.0005	0.2561	0.0047	0.0100	0.0034
NBP[1]1913*	0.0000	0.0000	0.0000	0.0000	0.0000	0.0000
Total	17.8012	1.0000	53.9808	1.0000	2.9766	1.0000

* Specified by user.

Material Stream: Pandhi-C (continued)

Fluid Package: Basis-1
Property Package: Peng-Robinson

COMPOSITION

Aqueous Phase

Phase Fraction 0.0000

COMPONENTS	MOLAR FLOW (kgmole/h)	MOLE FRACTION	MASS FLOW (tonne/d)	MASS FRACTION	LIQUID VOLUME FLOW (m3/h)	LIQUID VOLUME FRACTION
Methane	0.0000	0.0000	0.0000	0.0000	0.0000	0.0000
Ethane	0.0000	0.0000	0.0000	0.0000	0.0000	0.0000
Propane	0.0000	0.0000	0.0000	0.0000	0.0000	0.0000
i-Butane	0.0000	0.0000	0.0000	0.0000	0.0000	0.0000
n-Butane	0.0000	0.0000	0.0000	0.0000	0.0000	0.0000
i-Pentane	0.0000	0.0000	0.0000	0.0000	0.0000	0.0000
n-Pentane	0.0000	0.0000	0.0000	0.0000	0.0000	0.0000
n-Hexane	0.0000	0.0000	0.0000	0.0000	0.0000	0.0000
Nitrogen	0.0000	0.0000	0.0000	0.0000	0.0000	0.0000
CO2	0.0000	0.0004	0.0000	0.0010	0.0000	0.0012
H2S	0.0000	0.0000	0.0000	0.0000	0.0000	0.0000
H2O	0.0000	0.9996	0.0000	0.9990	0.0000	0.9988
NBP[1]95*	0.0000	0.0000	0.0000	0.0000	0.0000	0.0000
NBP[1]121*	0.0000	0.0000	0.0000	0.0000	0.0000	0.0000
NBP[1]147*	0.0000	0.0000	0.0000	0.0000	0.0000	0.0000
NBP[1]171*	0.0000	0.0000	0.0000	0.0000	0.0000	0.0000
NBP[1]195*	0.0000	0.0000	0.0000	0.0000	0.0000	0.0000
NBP[1]222*	0.0000	0.0000	0.0000	0.0000	0.0000	0.0000
NBP[1]248*	0.0000	0.0000	0.0000	0.0000	0.0000	0.0000
NBP[1]273*	0.0000	0.0000	0.0000	0.0000	0.0000	0.0000
NBP[1]299*	0.0000	0.0000	0.0000	0.0000	0.0000	0.0000
NBP[1]325*	0.0000	0.0000	0.0000	0.0000	0.0000	0.0000
NBP[1]351*	0.0000	0.0000	0.0000	0.0000	0.0000	0.0000
NBP[1]377*	0.0000	0.0000	0.0000	0.0000	0.0000	0.0000
NBP[1]402*	0.0000	0.0000	0.0000	0.0000	0.0000	0.0000
NBP[1]428*	0.0000	0.0000	0.0000	0.0000	0.0000	0.0000
NBP[1]454*	0.0000	0.0000	0.0000	0.0000	0.0000	0.0000
NBP[1]480*	0.0000	0.0000	0.0000	0.0000	0.0000	0.0000
NBP[1]505*	0.0000	0.0000	0.0000	0.0000	0.0000	0.0000
NBP[1]531*	0.0000	0.0000	0.0000	0.0000	0.0000	0.0000
NBP[1]557*	0.0000	0.0000	0.0000	0.0000	0.0000	0.0000
NBP[1]582*	0.0000	0.0000	0.0000	0.0000	0.0000	0.0000
NBP[1]608*	0.0000	0.0000	0.0000	0.0000	0.0000	0.0000
NBP[1]634*	0.0000	0.0000	0.0000	0.0000	0.0000	0.0000
NBP[1]659*	0.0000	0.0000	0.0000	0.0000	0.0000	0.0000
NBP[1]685*	0.0000	0.0000	0.0000	0.0000	0.0000	0.0000
NBP[1]711*	0.0000	0.0000	0.0000	0.0000	0.0000	0.0000
NBP[1]736*	0.0000	0.0000	0.0000	0.0000	0.0000	0.0000
NBP[1]762*	0.0000	0.0000	0.0000	0.0000	0.0000	0.0000
NBP[1]788*	0.0000	0.0000	0.0000	0.0000	0.0000	0.0000
NBP[1]825*	0.0000	0.0000	0.0000	0.0000	0.0000	0.0000
NBP[1]873*	0.0000	0.0000	0.0000	0.0000	0.0000	0.0000
NBP[1]926*	0.0000	0.0000	0.0000	0.0000	0.0000	0.0000
NBP[1]978*	0.0000	0.0000	0.0000	0.0000	0.0000	0.0000
NBP[1]1021*	0.0000	0.0000	0.0000	0.0000	0.0000	0.0000
NBP[1]1075*	0.0000	0.0000	0.0000	0.0000	0.0000	0.0000
NBP[1]1123*	0.0000	0.0000	0.0000	0.0000	0.0000	0.0000
NBP[1]1173*	0.0000	0.0000	0.0000	0.0000	0.0000	0.0000
NBP[1]1250*	0.0000	0.0000	0.0000	0.0000	0.0000	0.0000
NBP[1]1339*	0.0000	0.0000	0.0000	0.0000	0.0000	0.0000
NBP[1]1432*	0.0000	0.0000	0.0000	0.0000	0.0000	0.0000
NBP[1]1528*	0.0000	0.0000	0.0000	0.0000	0.0000	0.0000
NBP[1]1637*	0.0000	0.0000	0.0000	0.0000	0.0000	0.0000
NBP[1]1732*	0.0000	0.0000	0.0000	0.0000	0.0000	0.0000

* Specified by user.

Material Stream: Pandhi-C (continued)

Fluid Package: Basis-1
Property Package: Peng-Robinson

COMPOSITION

Aqueous Phase (continued)

Phase Fraction 0.0000

COMPONENTS	MOLAR FLOW (kgmole/h)	MOLE FRACTION	MASS FLOW (tonne/d)	MASS FRACTION	LIQUID VOLUME FLOW (m3/h)	LIQUID VOLUME FRACTION
NBP[1]1819*	0.0000	0.0000	0.0000	0.0000	0.0000	0.0000
NBP[1]1913*	0.0000	0.0000	0.0000	0.0000	0.0000	0.0000
Total	0.0000	1.0000	0.0000	1.0000	0.0000	1.0000

Material Stream: Pandhi-Cond.

Fluid Package: Basis-1
Property Package: Peng-Robinson

CONDITIONS

		Overall	Vapour Phase	Liquid Phase	Aqueous Phase
Vapour / Phase Fraction		0.0000	0.0000	1.0000	0.0000
Temperature:	(F)	179.8	179.8	179.8	179.8
Pressure:	(psig)	645.0	645.0	645.0	645.0
Molar Flow	(MMSCFD)	0.2185	0.0000	0.2185	0.0000
Mass Flow	(tonne/d)	43.21	0.0000	43.21	0.0000
Std Ideal Liq Vol Flow	(barrel/day)	338.5	0.0000	338.5	0.0000
Molar Enthalpy	(kJ/kgmole)	-3.493e+005	-9.014e+004	-3.493e+005	-2.817e+005
Molar Entropy	(kJ/kgmole-C)	344.5	164.0	344.5	67.32
Heat Flow	(MMBtu/hr)	-3.602	0.0000	-3.602	0.0000
Liq Vol Flow @Std Cond	(barrel/day)	329.8 *	0.0000	329.8	0.0000

PROPERTIES

		Overall	Vapour Phase	Liquid Phase	Aqueous Phase
Molecular Weight		165.4	22.43	165.4	18.02
Molar Density	(kgmole/m3)	4.626	1.696	4.626	53.52
Mass Density	(kg/m3)	765.4	38.04	765.4	964.6
Act. Volume Flow	(barrel/day)	355.1	0.0000	355.1	0.0000
Mass Enthalpy	(kJ/kg)	-2111	-4019	-2111	-1.563e+004
Mass Entropy	(kJ/kg-C)	2.082	7.313	2.082	3.736
Heat Capacity	(kJ/kgmole-C)	362.7	52.41	362.7	78.40
Mass Heat Capacity	(kJ/kg-C)	2.192	2.337	2.192	4.350
LHV Molar Basis (Std)	(Btu/SCF)	---	---	---	2.868e-003
LHV Mass Basis (Std)	(kJ/kg)	---	---	---	0.1405
Phase Fraction [Vol. Basis]		---	---	1.000	---
Phase Fraction [Mass Basis]		0.0000	0.0000	1.000	0.0000
Partial Pressure of CO2	(psig)	-14.70	---	---	---
Cost Based on Flow	(Cost/s)	0.0000	0.0000	0.0000	0.0000
Act. Gas Flow	(ACT_m3/h)	---	---	---	---
Avg. Liq. Density	(kgmole/m3)	4.852	16.65	4.852	55.37
Specific Heat	(kJ/kgmole-C)	362.7	52.41	362.7	78.40
Std. Gas Flow	(STD_m3/h)	257.3	0.0000	257.3	0.0000
Std. Ideal Liq. Mass Density	(kg/m3)	802.7	373.4	802.7	997.8
Act. Liq. Flow	(barrel/day)	355.1	---	355.1	0.0000
Z Factor		---	0.9078	0.3328	2.877e-002
Watson K		11.83	16.94	11.83	8.532
User Property		---	---	---	---
Partial Pressure of H2S	(psig)	-14.70	---	---	---
Cp/(Cp - R)		1.023	1.189	1.023	1.119
Cp/Cv		1.187	1.337	1.187	1.169
Heat of Vap.	(kJ/kgmole)	2.839e+005	---	---	---
Kinematic Viscosity	(cSt)	1.262	0.3698	1.262	0.3544
Liq. Mass Density (Std. Cond)	(kg/m3)	824.0	0.9528	824.0	1015
Liq. Vol. Flow (Std. Cond)	(barrel/day)	329.8	0.0000	329.8	0.0000
Liquid Fraction		1.000	0.0000	1.000	1.000
Molar Volume	(m3/kgmole)	0.2162	0.5896	0.2162	1.868e-002

* Specified by user.

Material Stream: Pandhi-Cond. (continued)

Fluid Package: Basis-1
Property Package: Peng-Robinson

PROPERTIES

		Overall	Vapour Phase	Liquid Phase	Aqueous Phase
Mass Heat of Vap.	(kJ/kg)	1716	---	---	---
Phase Fraction [Molar Basis]		0.0000	0.0000	1.0000	0.0000
Surface Tension	(dyne/cm)	15.07	---	15.07	61.93
Thermal Conductivity	(W/m-K)	9.787e-002	4.029e-002	9.787e-002	0.6712
Viscosity	(cP)	0.9662	1.407e-002	0.9662	0.3418
Cv (Semi-Ideal)	(kJ/kgmole-C)	354.4	44.10	354.4	70.08
Mass Cv (Semi-Ideal)	(kJ/kg-C)	2.142	1.966	2.142	3.889
Cv	(kJ/kgmole-C)	305.5	39.19	305.5	67.08
Mass Cv	(kJ/kg-C)	1.846	1.747	1.846	3.722
Cv (Ent. Method)	(kJ/kgmole-C)	---	-4561	---	65.09
Mass Cv (Ent. Method)	(kJ/kg-C)	---	-203.4	---	3.612
Cp/Cv (Ent. Method)		---	-1.149e-002	---	1.204
Reid VP at 37.8 C	(psig)	69.51	---	69.51	---
True VP at 37.8 C	(psig)	497.3	5017	497.3	8631
Liq. Vol. Flow - Sum(Std. Cond)	(barrel/day)	329.8	0.0000	329.8	0.0000
HHV Molar Basis (Std)	(Btu/SCF)	---	---	---	46.45
HHV Mass Basis (Std)	(kJ/kg)	---	---	---	2275
CO2 Loading		---	---	---	---
CO2 App ML Con	(kgmole/m3)	5.134e-002	---	5.134e-002	---
CO2 App WT Con	(kgmol/kg)	6.707e-005	---	6.707e-005	---
Phase Fraction [Act. Vol. Basis]		0.0000	0.0000	1.000	0.0000
Mass Exergy	(kJ/kg)	27.68	---	---	---
Viscosity Index		6.277	---	---	---
Ideal Gas Cp/Cv		1.029	1.216	1.029	1.324
Ideal Gas Cp	(kJ/kgmole-C)	299.3	46.85	299.3	33.95
Mass Ideal Gas Cp	(kJ/kg-C)	1.809	2.089	1.809	1.884
Bubble Point Pressure	(psig)	645.0	---	---	---

COMPOSITION

Overall Phase

Vapour Fraction 0.0000

COMPONENTS	MOLAR FLOW (kgmole/h)	MOLE FRACTION	MASS FLOW (tonne/d)	MASS FRACTION	LIQUID VOLUME FLOW (m3/h)	LIQUID VOLUME FRACTION
Methane	1.3199	0.1213	0.5082	0.0118	0.0707	0.0315
Ethane	0.5182	0.0476	0.3740	0.0087	0.0438	0.0195
Propane	0.5998	0.0551	0.6347	0.0147	0.0522	0.0233
i-Butane	0.1416	0.0130	0.1976	0.0046	0.0146	0.0065
n-Butane	0.3330	0.0306	0.4646	0.0108	0.0332	0.0148
i-Pentane	0.1232	0.0113	0.2134	0.0049	0.0143	0.0064
n-Pentane	0.1602	0.0147	0.2774	0.0064	0.0184	0.0082
n-Hexane	0.4409	0.0405	0.9120	0.0211	0.0573	0.0256
Nitrogen	0.0187	0.0017	0.0125	0.0003	0.0006	0.0003
CO2	0.1207	0.0111	0.1275	0.0030	0.0064	0.0029
H2S	0.0000	0.0000	0.0000	0.0000	0.0000	0.0000
H2O	0.0510	0.0047	0.0221	0.0005	0.0009	0.0004
NBP[1]95*	0.0483	0.0044	0.0788	0.0018	0.0048	0.0022
NBP[1]121*	0.0724	0.0067	0.1265	0.0029	0.0077	0.0034
NBP[1]147*	0.1177	0.0108	0.2266	0.0052	0.0135	0.0060
NBP[1]171*	0.2790	0.0256	0.5872	0.0136	0.0344	0.0153
NBP[1]195*	0.4464	0.0410	1.0025	0.0232	0.0580	0.0259
NBP[1]222*	0.4104	0.0377	0.9912	0.0229	0.0567	0.0253
NBP[1]248*	0.4042	0.0371	1.0498	0.0243	0.0593	0.0264
NBP[1]273*	0.3731	0.0343	1.0362	0.0240	0.0578	0.0258
NBP[1]299*	0.3243	0.0298	0.9603	0.0222	0.0530	0.0236
NBP[1]325*	0.2549	0.0234	0.8018	0.0186	0.0438	0.0195
NBP[1]351*	0.2193	0.0202	0.7333	0.0170	0.0397	0.0177
NBP[1]377*	0.2091	0.0192	0.7458	0.0173	0.0400	0.0178

* Specified by user.

Material Stream: Pandhi-Cond. (continued)

Fluid Package: Basis-1
Property Package: Peng-Robinson

COMPOSITION

Overall Phase (continued)

Vapour Fraction 0.0000

COMPONENTS	MOLAR FLOW (kgmole/h)	MOLE FRACTION	MASS FLOW (tonne/d)	MASS FRACTION	LIQUID VOLUME FLOW (m3/h)	LIQUID VOLUME FRACTION
NBP[1]402*	0.1970	0.0181	0.7494	0.0173	0.0397	0.0177
NBP[1]428*	0.1908	0.0175	0.7741	0.0179	0.0407	0.0181
NBP[1]454*	0.1924	0.0177	0.8343	0.0193	0.0434	0.0193
NBP[1]480*	0.1963	0.0180	0.9094	0.0210	0.0468	0.0209
NBP[1]505*	0.1909	0.0175	0.9432	0.0218	0.0481	0.0215
NBP[1]531*	0.1847	0.0170	0.9710	0.0225	0.0491	0.0219
NBP[1]557*	0.1781	0.0164	0.9962	0.0231	0.0499	0.0223
NBP[1]582*	0.1704	0.0157	1.0123	0.0234	0.0503	0.0224
NBP[1]608*	0.1642	0.0151	1.0346	0.0239	0.0510	0.0227
NBP[1]634*	0.1611	0.0148	1.0751	0.0249	0.0525	0.0234
NBP[1]659*	0.1586	0.0146	1.1193	0.0259	0.0543	0.0242
NBP[1]685*	0.1641	0.0151	1.2227	0.0283	0.0588	0.0262
NBP[1]711*	0.1715	0.0158	1.3444	0.0311	0.0642	0.0286
NBP[1]736*	0.1697	0.0156	1.3915	0.0322	0.0659	0.0294
NBP[1]762*	0.1653	0.0152	1.4214	0.0329	0.0669	0.0298
NBP[1]788*	0.1585	0.0146	1.4424	0.0334	0.0674	0.0300
NBP[1]825*	0.2655	0.0244	2.5963	0.0601	0.1201	0.0536
NBP[1]873*	0.1830	0.0168	1.9404	0.0449	0.0887	0.0396
NBP[1]926*	0.1437	0.0132	1.6472	0.0381	0.0744	0.0332
NBP[1]978*	0.1474	0.0135	1.8524	0.0429	0.0825	0.0368
NBP[1]1021*	0.0728	0.0067	0.9655	0.0223	0.0426	0.0190
NBP[1]1075*	0.0449	0.0041	0.6310	0.0146	0.0276	0.0123
NBP[1]1123*	0.0417	0.0038	0.6267	0.0145	0.0271	0.0121
NBP[1]1173*	0.0300	0.0028	0.4772	0.0110	0.0205	0.0091
NBP[1]1250*	0.0393	0.0036	0.6767	0.0157	0.0287	0.0128
NBP[1]1339*	0.0364	0.0033	0.6999	0.0162	0.0291	0.0130
NBP[1]1432*	0.0257	0.0024	0.5397	0.0125	0.0221	0.0099
NBP[1]1528*	0.0180	0.0017	0.4082	0.0094	0.0165	0.0074
NBP[1]1637*	0.0127	0.0012	0.3047	0.0071	0.0122	0.0054
NBP[1]1732*	0.0101	0.0009	0.2565	0.0059	0.0101	0.0045
NBP[1]1819*	0.0097	0.0009	0.2589	0.0060	0.0101	0.0045
NBP[1]1913*	0.0000	0.0000	0.0001	0.0000	0.0000	0.0000
Total	10.8812	1.0000	43.2065	1.0000	2.2427	1.0000

Vapour Phase

Phase Fraction 0.0000

COMPONENTS	MOLAR FLOW (kgmole/h)	MOLE FRACTION	MASS FLOW (tonne/d)	MASS FRACTION	LIQUID VOLUME FLOW (m3/h)	LIQUID VOLUME FRACTION
Methane	0.0000	0.7393	0.0000	0.5288	0.0000	0.6596
Ethane	0.0000	0.1016	0.0000	0.1363	0.0000	0.1431
Propane	0.0000	0.0527	0.0000	0.1036	0.0000	0.0764
i-Butane	0.0000	0.0068	0.0000	0.0176	0.0000	0.0117
n-Butane	0.0000	0.0130	0.0000	0.0337	0.0000	0.0216
i-Pentane	0.0000	0.0026	0.0000	0.0084	0.0000	0.0050
n-Pentane	0.0000	0.0029	0.0000	0.0092	0.0000	0.0055
n-Hexane	0.0000	0.0037	0.0000	0.0142	0.0000	0.0080
Nitrogen	0.0000	0.0201	0.0000	0.0250	0.0000	0.0116
CO2	0.0000	0.0333	0.0000	0.0654	0.0000	0.0296
H2S	0.0000	0.0000	0.0000	0.0000	0.0000	0.0000
H2O	0.0000	0.0131	0.0000	0.0105	0.0000	0.0039
NBP[1]95*	0.0000	0.0009	0.0000	0.0026	0.0000	0.0014
NBP[1]121*	0.0000	0.0010	0.0000	0.0031	0.0000	0.0017
NBP[1]147*	0.0000	0.0011	0.0000	0.0040	0.0000	0.0021
NBP[1]171*	0.0000	0.0020	0.0000	0.0076	0.0000	0.0040
NBP[1]195*	0.0000	0.0023	0.0000	0.0094	0.0000	0.0049

* Specified by user.

Material Stream: Pandhi-Cond. (continued)

Fluid Package: Basis-1
Property Package: Peng-Robinson

COMPOSITION

Vapour Phase (continued)

Phase Fraction 0.0000

COMPONENTS	MOLAR FLOW (kgmole/h)	MOLE FRACTION	MASS FLOW (tonne/d)	MASS FRACTION	LIQUID VOLUME FLOW (m3/h)	LIQUID VOLUME FRACTION
NBP[1]222*	0.0000	0.0014	0.0000	0.0063	0.0000	0.0032
NBP[1]248*	0.0000	0.0009	0.0000	0.0045	0.0000	0.0023
NBP[1]273*	0.0000	0.0006	0.0000	0.0030	0.0000	0.0015
NBP[1]299*	0.0000	0.0003	0.0000	0.0019	0.0000	0.0009
NBP[1]325*	0.0000	0.0002	0.0000	0.0010	0.0000	0.0005
NBP[1]351*	0.0000	0.0001	0.0000	0.0006	0.0000	0.0003
NBP[1]377*	0.0000	0.0001	0.0000	0.0004	0.0000	0.0002
NBP[1]402*	0.0000	0.0000	0.0000	0.0002	0.0000	0.0001
NBP[1]428*	0.0000	0.0000	0.0000	0.0001	0.0000	0.0001
NBP[1]454*	0.0000	0.0000	0.0000	0.0001	0.0000	0.0000
NBP[1]480*	0.0000	0.0000	0.0000	0.0001	0.0000	0.0000
NBP[1]505*	0.0000	0.0000	0.0000	0.0000	0.0000	0.0000
NBP[1]531*	0.0000	0.0000	0.0000	0.0000	0.0000	0.0000
NBP[1]557*	0.0000	0.0000	0.0000	0.0000	0.0000	0.0000
NBP[1]582*	0.0000	0.0000	0.0000	0.0000	0.0000	0.0000
NBP[1]608*	0.0000	0.0000	0.0000	0.0000	0.0000	0.0000
NBP[1]634*	0.0000	0.0000	0.0000	0.0000	0.0000	0.0000
NBP[1]659*	0.0000	0.0000	0.0000	0.0000	0.0000	0.0000
NBP[1]685*	0.0000	0.0000	0.0000	0.0000	0.0000	0.0000
NBP[1]711*	0.0000	0.0000	0.0000	0.0000	0.0000	0.0000
NBP[1]736*	0.0000	0.0000	0.0000	0.0000	0.0000	0.0000
NBP[1]762*	0.0000	0.0000	0.0000	0.0000	0.0000	0.0000
NBP[1]788*	0.0000	0.0000	0.0000	0.0000	0.0000	0.0000
NBP[1]825*	0.0000	0.0000	0.0000	0.0000	0.0000	0.0000
NBP[1]873*	0.0000	0.0000	0.0000	0.0000	0.0000	0.0000
NBP[1]926*	0.0000	0.0000	0.0000	0.0000	0.0000	0.0000
NBP[1]978*	0.0000	0.0000	0.0000	0.0000	0.0000	0.0000
NBP[1]1021*	0.0000	0.0000	0.0000	0.0000	0.0000	0.0000
NBP[1]1075*	0.0000	0.0000	0.0000	0.0000	0.0000	0.0000
NBP[1]1123*	0.0000	0.0000	0.0000	0.0000	0.0000	0.0000
NBP[1]1173*	0.0000	0.0000	0.0000	0.0000	0.0000	0.0000
NBP[1]1250*	0.0000	0.0000	0.0000	0.0000	0.0000	0.0000
NBP[1]1339*	0.0000	0.0000	0.0000	0.0000	0.0000	0.0000
NBP[1]1432*	0.0000	0.0000	0.0000	0.0000	0.0000	0.0000
NBP[1]1528*	0.0000	0.0000	0.0000	0.0000	0.0000	0.0000
NBP[1]1637*	0.0000	0.0000	0.0000	0.0000	0.0000	0.0000
NBP[1]1732*	0.0000	0.0000	0.0000	0.0000	0.0000	0.0000
NBP[1]1819*	0.0000	0.0000	0.0000	0.0000	0.0000	0.0000
NBP[1]1913*	0.0000	0.0000	0.0000	0.0021	0.0000	0.0007
Total	0.0000	1.0000	0.0000	1.0000	0.0000	1.0000

Liquid Phase

Phase Fraction 1.000

COMPONENTS	MOLAR FLOW (kgmole/h)	MOLE FRACTION	MASS FLOW (tonne/d)	MASS FRACTION	LIQUID VOLUME FLOW (m3/h)	LIQUID VOLUME FRACTION
Methane	1.3199	0.1213	0.5082	0.0118	0.0707	0.0315
Ethane	0.5182	0.0476	0.3740	0.0087	0.0438	0.0195
Propane	0.5998	0.0551	0.6347	0.0147	0.0522	0.0233
i-Butane	0.1416	0.0130	0.1976	0.0046	0.0146	0.0065
n-Butane	0.3330	0.0306	0.4646	0.0108	0.0332	0.0148
i-Pentane	0.1232	0.0113	0.2134	0.0049	0.0143	0.0064
n-Pentane	0.1602	0.0147	0.2774	0.0064	0.0184	0.0082
n-Hexane	0.4409	0.0405	0.9120	0.0211	0.0573	0.0256
Nitrogen	0.0187	0.0017	0.0125	0.0003	0.0006	0.0003
CO2	0.1207	0.0111	0.1275	0.0030	0.0064	0.0029

* Specified by user.

Material Stream: Pandhi-Cond. (continued)

Fluid Package: Basis-1
Property Package: Peng-Robinson

COMPOSITION

Liquid Phase (continued)

Phase Fraction 1.000

COMPONENTS	MOLAR FLOW (kgmole/h)	MOLE FRACTION	MASS FLOW (tonne/d)	MASS FRACTION	LIQUID VOLUME FLOW (m3/h)	LIQUID VOLUME FRACTION
H2S	0.0000	0.0000	0.0000	0.0000	0.0000	0.0000
H2O	0.0510	0.0047	0.0221	0.0005	0.0009	0.0004
NBP[1]95*	0.0483	0.0044	0.0788	0.0018	0.0048	0.0022
NBP[1]121*	0.0724	0.0067	0.1265	0.0029	0.0077	0.0034
NBP[1]147*	0.1177	0.0108	0.2266	0.0052	0.0135	0.0060
NBP[1]171*	0.2790	0.0256	0.5872	0.0136	0.0344	0.0153
NBP[1]195*	0.4464	0.0410	1.0025	0.0232	0.0580	0.0259
NBP[1]222*	0.4104	0.0377	0.9912	0.0229	0.0567	0.0253
NBP[1]248*	0.4042	0.0371	1.0498	0.0243	0.0593	0.0264
NBP[1]273*	0.3731	0.0343	1.0362	0.0240	0.0578	0.0258
NBP[1]299*	0.3243	0.0298	0.9603	0.0222	0.0530	0.0236
NBP[1]325*	0.2549	0.0234	0.8018	0.0186	0.0438	0.0195
NBP[1]351*	0.2193	0.0202	0.7333	0.0170	0.0397	0.0177
NBP[1]377*	0.2091	0.0192	0.7458	0.0173	0.0400	0.0178
NBP[1]402*	0.1970	0.0181	0.7494	0.0173	0.0397	0.0177
NBP[1]428*	0.1908	0.0175	0.7741	0.0179	0.0407	0.0181
NBP[1]454*	0.1924	0.0177	0.8343	0.0193	0.0434	0.0193
NBP[1]480*	0.1963	0.0180	0.9094	0.0210	0.0468	0.0209
NBP[1]505*	0.1909	0.0175	0.9432	0.0218	0.0481	0.0215
NBP[1]531*	0.1847	0.0170	0.9710	0.0225	0.0491	0.0219
NBP[1]557*	0.1781	0.0164	0.9962	0.0231	0.0499	0.0223
NBP[1]582*	0.1704	0.0157	1.0123	0.0234	0.0503	0.0224
NBP[1]608*	0.1642	0.0151	1.0346	0.0239	0.0510	0.0227
NBP[1]634*	0.1611	0.0148	1.0751	0.0249	0.0525	0.0234
NBP[1]659*	0.1586	0.0146	1.1193	0.0259	0.0543	0.0242
NBP[1]685*	0.1641	0.0151	1.2227	0.0283	0.0588	0.0262
NBP[1]711*	0.1715	0.0158	1.3444	0.0311	0.0642	0.0286
NBP[1]736*	0.1697	0.0156	1.3915	0.0322	0.0659	0.0294
NBP[1]762*	0.1653	0.0152	1.4214	0.0329	0.0669	0.0298
NBP[1]788*	0.1585	0.0146	1.4424	0.0334	0.0674	0.0300
NBP[1]825*	0.2655	0.0244	2.5963	0.0601	0.1201	0.0536
NBP[1]873*	0.1830	0.0168	1.9404	0.0449	0.0887	0.0396
NBP[1]926*	0.1437	0.0132	1.6472	0.0381	0.0744	0.0332
NBP[1]978*	0.1474	0.0135	1.8524	0.0429	0.0825	0.0368
NBP[1]1021*	0.0728	0.0067	0.9655	0.0223	0.0426	0.0190
NBP[1]1075*	0.0449	0.0041	0.6310	0.0146	0.0276	0.0123
NBP[1]1123*	0.0417	0.0038	0.6267	0.0145	0.0271	0.0121
NBP[1]1173*	0.0300	0.0028	0.4772	0.0110	0.0205	0.0091
NBP[1]1250*	0.0393	0.0036	0.6767	0.0157	0.0287	0.0128
NBP[1]1339*	0.0364	0.0033	0.6999	0.0162	0.0291	0.0130
NBP[1]1432*	0.0257	0.0024	0.5397	0.0125	0.0221	0.0099
NBP[1]1528*	0.0180	0.0017	0.4082	0.0094	0.0165	0.0074
NBP[1]1637*	0.0127	0.0012	0.3047	0.0071	0.0122	0.0054
NBP[1]1732*	0.0101	0.0009	0.2565	0.0059	0.0101	0.0045
NBP[1]1819*	0.0097	0.0009	0.2589	0.0060	0.0101	0.0045
NBP[1]1913*	0.0000	0.0000	0.0001	0.0000	0.0000	0.0000
Total	10.8812	1.0000	43.2065	1.0000	2.2427	1.0000

Aqueous Phase

Phase Fraction 0.0000

COMPONENTS	MOLAR FLOW (kgmole/h)	MOLE FRACTION	MASS FLOW (tonne/d)	MASS FRACTION	LIQUID VOLUME FLOW (m3/h)	LIQUID VOLUME FRACTION
Methane	0.0000	0.0000	0.0000	0.0000	0.0000	0.0000
Ethane	0.0000	0.0000	0.0000	0.0000	0.0000	0.0000
Propane	0.0000	0.0000	0.0000	0.0000	0.0000	0.0000

* Specified by user.

Material Stream: Pandhi-Cond. (continued)

Fluid Package: Basis-1
Property Package: Peng-Robinson

COMPOSITION

Aqueous Phase (continued)

Phase Fraction 0.0000

COMPONENTS	MOLAR FLOW (kgmole/h)	MOLE FRACTION	MASS FLOW (tonne/d)	MASS FRACTION	LIQUID VOLUME FLOW (m3/h)	LIQUID VOLUME FRACTION
i-Butane	0.0000	0.0000	0.0000	0.0000	0.0000	0.0000
n-Butane	0.0000	0.0000	0.0000	0.0000	0.0000	0.0000
i-Pentane	0.0000	0.0000	0.0000	0.0000	0.0000	0.0000
n-Pentane	0.0000	0.0000	0.0000	0.0000	0.0000	0.0000
n-Hexane	0.0000	0.0000	0.0000	0.0000	0.0000	0.0000
Nitrogen	0.0000	0.0000	0.0000	0.0000	0.0000	0.0000
CO2	0.0000	0.0003	0.0000	0.0006	0.0000	0.0007
H2S	0.0000	0.0000	0.0000	0.0000	0.0000	0.0000
H2O	0.0000	0.9997	0.0000	0.9994	0.0000	0.9992
NBP[1]95*	0.0000	0.0000	0.0000	0.0000	0.0000	0.0000
NBP[1]121*	0.0000	0.0000	0.0000	0.0000	0.0000	0.0000
NBP[1]147*	0.0000	0.0000	0.0000	0.0000	0.0000	0.0000
NBP[1]171*	0.0000	0.0000	0.0000	0.0000	0.0000	0.0000
NBP[1]195*	0.0000	0.0000	0.0000	0.0000	0.0000	0.0000
NBP[1]222*	0.0000	0.0000	0.0000	0.0000	0.0000	0.0000
NBP[1]248*	0.0000	0.0000	0.0000	0.0000	0.0000	0.0000
NBP[1]273*	0.0000	0.0000	0.0000	0.0000	0.0000	0.0000
NBP[1]299*	0.0000	0.0000	0.0000	0.0000	0.0000	0.0000
NBP[1]325*	0.0000	0.0000	0.0000	0.0000	0.0000	0.0000
NBP[1]351*	0.0000	0.0000	0.0000	0.0000	0.0000	0.0000
NBP[1]377*	0.0000	0.0000	0.0000	0.0000	0.0000	0.0000
NBP[1]402*	0.0000	0.0000	0.0000	0.0000	0.0000	0.0000
NBP[1]428*	0.0000	0.0000	0.0000	0.0000	0.0000	0.0000
NBP[1]454*	0.0000	0.0000	0.0000	0.0000	0.0000	0.0000
NBP[1]480*	0.0000	0.0000	0.0000	0.0000	0.0000	0.0000
NBP[1]505*	0.0000	0.0000	0.0000	0.0000	0.0000	0.0000
NBP[1]531*	0.0000	0.0000	0.0000	0.0000	0.0000	0.0000
NBP[1]557*	0.0000	0.0000	0.0000	0.0000	0.0000	0.0000
NBP[1]582*	0.0000	0.0000	0.0000	0.0000	0.0000	0.0000
NBP[1]608*	0.0000	0.0000	0.0000	0.0000	0.0000	0.0000
NBP[1]634*	0.0000	0.0000	0.0000	0.0000	0.0000	0.0000
NBP[1]659*	0.0000	0.0000	0.0000	0.0000	0.0000	0.0000
NBP[1]685*	0.0000	0.0000	0.0000	0.0000	0.0000	0.0000
NBP[1]711*	0.0000	0.0000	0.0000	0.0000	0.0000	0.0000
NBP[1]736*	0.0000	0.0000	0.0000	0.0000	0.0000	0.0000
NBP[1]762*	0.0000	0.0000	0.0000	0.0000	0.0000	0.0000
NBP[1]788*	0.0000	0.0000	0.0000	0.0000	0.0000	0.0000
NBP[1]825*	0.0000	0.0000	0.0000	0.0000	0.0000	0.0000
NBP[1]873*	0.0000	0.0000	0.0000	0.0000	0.0000	0.0000
NBP[1]926*	0.0000	0.0000	0.0000	0.0000	0.0000	0.0000
NBP[1]978*	0.0000	0.0000	0.0000	0.0000	0.0000	0.0000
NBP[1]1021*	0.0000	0.0000	0.0000	0.0000	0.0000	0.0000
NBP[1]1075*	0.0000	0.0000	0.0000	0.0000	0.0000	0.0000
NBP[1]1123*	0.0000	0.0000	0.0000	0.0000	0.0000	0.0000
NBP[1]1173*	0.0000	0.0000	0.0000	0.0000	0.0000	0.0000
NBP[1]1250*	0.0000	0.0000	0.0000	0.0000	0.0000	0.0000
NBP[1]1339*	0.0000	0.0000	0.0000	0.0000	0.0000	0.0000
NBP[1]1432*	0.0000	0.0000	0.0000	0.0000	0.0000	0.0000
NBP[1]1528*	0.0000	0.0000	0.0000	0.0000	0.0000	0.0000
NBP[1]1637*	0.0000	0.0000	0.0000	0.0000	0.0000	0.0000
NBP[1]1732*	0.0000	0.0000	0.0000	0.0000	0.0000	0.0000
NBP[1]1819*	0.0000	0.0000	0.0000	0.0000	0.0000	0.0000
NBP[1]1913*	0.0000	0.0000	0.0000	0.0000	0.0000	0.0000
Total	0.0000	1.0000	0.0000	1.0000	0.0000	1.0000

* Specified by user.

Petrochemical Engineering Consultants Karachi, Pakistan	Case Name:	CASE-3B.hsc
	Unit Set:	NewUser5e
	Date/Time:	Fri Mar 20 18:25:06 2020

Material Stream: Pandhi-Gas-

Fluid Package: Basis-1

Property Package: Peng-Robinson

CONDITIONS

	Overall	Vapour Phase	Liquid Phase	Aqueous Phase
Vapour / Phase Fraction	1.0000	1.0000	0.0000	0.0000
Temperature: (F)	84.79	84.79	84.79	84.79
Pressure: (psig)	445.0	445.0	445.0	445.0
Molar Flow (MMSCFD)	5.381	5.381	0.0000	0.0000
Mass Flow (tonne/d)	137.6	137.6	0.0000	0.0000
Std Ideal Liq Vol Flow (barrel/day)	2403	2403	0.0000	0.0000
Molar Enthalpy (kJ/kgmole)	-8.928e+004	-8.928e+004	-2.875e+005	-2.859e+005
Molar Entropy (kJ/kgmole-C)	159.3	159.3	218.7	54.83
Heat Flow (MMBtu/hr)	-22.68	-22.68	0.0000	0.0000
Liq Vol Flow @Std Cond (barrel/day)	9.528e+005 *	9.528e+005	0.0000	0.0000

PROPERTIES

	Overall	Vapour Phase	Liquid Phase	Aqueous Phase
Molecular Weight	21.39	21.39	126.4	18.03
Molar Density (kgmole/m3)	1.408	1.408	6.079	55.76
Mass Density (kg/m3)	30.10	30.10	768.1	1005
Act. Volume Flow (barrel/day)	2.874e+004	2.874e+004	0.0000	0.0000
Mass Enthalpy (kJ/kg)	-4175	-4175	-2275	-1.586e+004
Mass Entropy (kJ/kg-C)	7.448	7.448	1.731	3.042
Heat Capacity (kJ/kgmole-C)	47.13	47.13	253.8	77.64
Mass Heat Capacity (kJ/kg-C)	2.204	2.204	2.009	4.307
LHV Molar Basis (Std) (Btu/SCF)	---	---	---	1.809e-004
LHV Mass Basis (Std) (kJ/kg)	---	---	---	8.858e-003
Phase Fraction [Vol. Basis]	1.000	1.000	---	---
Phase Fraction [Mass Basis]	1.000	1.000	0.0000	0.0000
Partial Pressure of CO2 (psig)	0.9692	---	---	---
Cost Based on Flow (Cost/s)	0.0000	0.0000	0.0000	0.0000
Act. Gas Flow (ACT_m3/h)	190.4	190.4	---	---
Avg. Liq. Density (kgmole/m3)	16.84	16.84	5.980	55.35
Specific Heat (kJ/kgmole-C)	47.13	47.13	253.8	77.64
Std. Gas Flow (STD_m3/h)	6337	6337	0.0000	0.0000
Std. Ideal Liq. Mass Density (kg/m3)	360.1	360.1	755.6	997.8
Act. Liq. Flow (barrel/day)	0.0000	---	---	0.0000
Z Factor	---	0.8953	0.2073	2.260e-002
Watson K	17.28	17.28	11.99	8.497
User Property	---	---	---	---
Partial Pressure of H2S (psig)	-14.70	---	---	---
Cp/(Cp - R)	1.214	1.214	1.034	1.120
Cp/Cv	1.388	1.388	1.034	1.149
Heat of Vap. (kJ/kgmole)	1.879e+004	---	---	---
Kinematic Viscosity (cSt)	0.3993	0.3993	12.25	0.8047
Liq. Mass Density (Std. Cond) (kg/m3)	0.9081	0.9081	781.8	1015
Liq. Vol. Flow (Std. Cond) (barrel/day)	9.528e+005	9.528e+005	0.0000	0.0000
Liquid Fraction	0.0000	0.0000	1.000	1.000
Molar Volume (m3/kgmole)	0.7104	0.7104	0.1645	1.793e-002
Mass Heat of Vap. (kJ/kg)	878.6	---	---	---
Phase Fraction [Molar Basis]	1.0000	1.0000	0.0000	0.0000
Surface Tension (dyne/cm)	---	---	15.96	71.32
Thermal Conductivity (W/m-K)	3.302e-002	3.302e-002	0.1006	0.6173
Viscosity (cP)	1.202e-002	1.202e-002	9.409	0.8089
Cv (Semi-Ideal) (kJ/kgmole-C)	38.81	38.81	245.5	69.33
Mass Cv (Semi-Ideal) (kJ/kg-C)	1.815	1.815	1.943	3.846
Cv (kJ/kgmole-C)	33.96	33.96	245.5	67.56
Mass Cv (kJ/kg-C)	1.588	1.588	1.943	3.748
Cv (Ent. Method) (kJ/kgmole-C)	-508.4	-3697	---	66.88
Mass Cv (Ent. Method) (kJ/kg-C)	-23.77	-172.9	---	3.711
Cp/Cv (Ent. Method)	-9.270e-002	-1.275e-002	---	1.161

Licensed to: PETROCHEMICAL ENGINEERIN

* Specified by user.

Material Stream: Pandhi-Gas- (continued)

Fluid Package: Basis-1
Property Package: Peng-Robinson

PROPERTIES

	Overall	Vapour Phase	Liquid Phase	Aqueous Phase
Reid VP at 37.8 C (psig)	---	---	97.87	---
True VP at 37.8 C (psig)	3607	3607	475.9	17.11
Liq. Vol. Flow - Sum(Std. Cond) (barrel/day)	9.528e+005	9.528e+005	0.0000	0.0000
HHV Molar Basis (Std) (Btu/SCF)	---	---	---	46.45
HHV Mass Basis (Std) (kJ/kg)	---	---	---	2274
CO2 Loading	---	---	---	---
CO2 App ML Con (kgmole/m3)	---	---	---	---
CO2 App WT Con (kgmol/kg)	---	---	---	---
Phase Fraction [Act. Vol. Basis]	1.000	1.000	0.0000	0.0000
Mass Exergy (kJ/kg)	387.1	---	---	---
Viscosity Index	-58.95	---	---	---
Ideal Gas Cp/Cv	1.249	1.249	1.043	1.329
Ideal Gas Cp (kJ/kgmole-C)	41.72	41.72	200.0	33.60
Mass Ideal Gas Cp (kJ/kg-C)	1.951	1.951	1.583	1.864
Bubble Point Pressure (psig)	4658	---	---	---

COMPOSITION

Overall Phase

Vapour Fraction 1.0000

COMPONENTS	MOLAR FLOW (kgmole/h)	MOLE FRACTION	MASS FLOW (tonne/d)	MASS FRACTION	LIQUID VOLUME FLOW (m3/h)	LIQUID VOLUME FRACTION
Methane	205.0219	0.7649	78.9395	0.5738	10.9860	0.6901
Ethane	27.6541	0.1032	19.9573	0.1451	2.3379	0.1469
Propane	13.5902	0.0507	14.3829	0.1046	1.1828	0.0743
i-Butane	1.5866	0.0059	2.2133	0.0161	0.1641	0.0103
n-Butane	2.8841	0.0108	4.0233	0.0292	0.2874	0.0181
i-Pentane	0.4635	0.0017	0.8025	0.0058	0.0536	0.0034
n-Pentane	0.4652	0.0017	0.8056	0.0059	0.0533	0.0033
n-Hexane	0.3694	0.0014	0.7639	0.0056	0.0480	0.0030
Nitrogen	5.5752	0.0208	3.7483	0.0272	0.1937	0.0122
CO2	9.1335	0.0341	9.6471	0.0701	0.4870	0.0306
H2S	0.0005	0.0000	0.0004	0.0000	0.0000	0.0000
H2O	0.3945	0.0015	0.1706	0.0012	0.0071	0.0004
NBP[1]95*	0.1425	0.0005	0.2323	0.0017	0.0142	0.0009
NBP[1]121*	0.1318	0.0005	0.2305	0.0017	0.0139	0.0009
NBP[1]147*	0.1254	0.0005	0.2414	0.0018	0.0144	0.0009
NBP[1]171*	0.1733	0.0006	0.3646	0.0027	0.0213	0.0013
NBP[1]195*	0.1579	0.0006	0.3546	0.0026	0.0205	0.0013
NBP[1]222*	0.0732	0.0003	0.1768	0.0013	0.0101	0.0006
NBP[1]248*	0.0375	0.0001	0.0974	0.0007	0.0055	0.0003
NBP[1]273*	0.0181	0.0001	0.0503	0.0004	0.0028	0.0002
NBP[1]299*	0.0083	0.0000	0.0245	0.0002	0.0014	0.0001
NBP[1]325*	0.0033	0.0000	0.0105	0.0001	0.0006	0.0000
NBP[1]351*	0.0015	0.0000	0.0050	0.0000	0.0003	0.0000
NBP[1]377*	0.0007	0.0000	0.0025	0.0000	0.0001	0.0000
NBP[1]402*	0.0003	0.0000	0.0013	0.0000	0.0001	0.0000
NBP[1]428*	0.0002	0.0000	0.0007	0.0000	0.0000	0.0000
NBP[1]454*	0.0001	0.0000	0.0003	0.0000	0.0000	0.0000
NBP[1]480*	0.0000	0.0000	0.0002	0.0000	0.0000	0.0000
NBP[1]505*	0.0000	0.0000	0.0001	0.0000	0.0000	0.0000
NBP[1]531*	0.0000	0.0000	0.0000	0.0000	0.0000	0.0000
NBP[1]557*	0.0000	0.0000	0.0000	0.0000	0.0000	0.0000
NBP[1]582*	0.0000	0.0000	0.0000	0.0000	0.0000	0.0000
NBP[1]608*	0.0000	0.0000	0.0000	0.0000	0.0000	0.0000
NBP[1]634*	0.0000	0.0000	0.0000	0.0000	0.0000	0.0000
NBP[1]659*	0.0000	0.0000	0.0000	0.0000	0.0000	0.0000
NBP[1]685*	0.0000	0.0000	0.0000	0.0000	0.0000	0.0000

* Specified by user.

Material Stream: Pandhi-Gas- (continued)

Fluid Package: Basis-1
Property Package: Peng-Robinson

COMPOSITION

Overall Phase (continued)

Vapour Fraction 1.0000

COMPONENTS	MOLAR FLOW (kgmole/h)	MOLE FRACTION	MASS FLOW (tonne/d)	MASS FRACTION	LIQUID VOLUME FLOW (m3/h)	LIQUID VOLUME FRACTION
NBP[1]711*	0.0000	0.0000	0.0000	0.0000	0.0000	0.0000
NBP[1]736*	0.0000	0.0000	0.0000	0.0000	0.0000	0.0000
NBP[1]762*	0.0000	0.0000	0.0000	0.0000	0.0000	0.0000
NBP[1]788*	0.0000	0.0000	0.0000	0.0000	0.0000	0.0000
NBP[1]825*	0.0000	0.0000	0.0000	0.0000	0.0000	0.0000
NBP[1]873*	0.0000	0.0000	0.0000	0.0000	0.0000	0.0000
NBP[1]926*	0.0000	0.0000	0.0000	0.0000	0.0000	0.0000
NBP[1]978*	0.0000	0.0000	0.0000	0.0000	0.0000	0.0000
NBP[1]1021*	0.0000	0.0000	0.0000	0.0000	0.0000	0.0000
NBP[1]1075*	0.0000	0.0000	0.0000	0.0000	0.0000	0.0000
NBP[1]1123*	0.0000	0.0000	0.0000	0.0000	0.0000	0.0000
NBP[1]1173*	0.0000	0.0000	0.0000	0.0000	0.0000	0.0000
NBP[1]1250*	0.0000	0.0000	0.0000	0.0000	0.0000	0.0000
NBP[1]1339*	0.0000	0.0000	0.0000	0.0000	0.0000	0.0000
NBP[1]1432*	0.0000	0.0000	0.0000	0.0000	0.0000	0.0000
NBP[1]1528*	0.0000	0.0000	0.0000	0.0000	0.0000	0.0000
NBP[1]1637*	0.0000	0.0000	0.0000	0.0000	0.0000	0.0000
NBP[1]1732*	0.0000	0.0000	0.0000	0.0000	0.0000	0.0000
NBP[1]1819*	0.0001	0.0000	0.0029	0.0000	0.0001	0.0000
NBP[1]1913*	0.0112	0.0000	0.3148	0.0023	0.0121	0.0008
Total	268.0242	1.0000	137.5655	1.0000	15.9186	1.0000

Vapour Phase

Phase Fraction 1.000

COMPONENTS	MOLAR FLOW (kgmole/h)	MOLE FRACTION	MASS FLOW (tonne/d)	MASS FRACTION	LIQUID VOLUME FLOW (m3/h)	LIQUID VOLUME FRACTION
Methane	205.0219	0.7649	78.9395	0.5738	10.9860	0.6901
Ethane	27.6541	0.1032	19.9573	0.1451	2.3379	0.1469
Propane	13.5902	0.0507	14.3829	0.1046	1.1828	0.0743
i-Butane	1.5866	0.0059	2.2133	0.0161	0.1641	0.0103
n-Butane	2.8841	0.0108	4.0233	0.0292	0.2874	0.0181
i-Pentane	0.4635	0.0017	0.8025	0.0058	0.0536	0.0034
n-Pentane	0.4652	0.0017	0.8056	0.0059	0.0533	0.0033
n-Hexane	0.3694	0.0014	0.7639	0.0056	0.0480	0.0030
Nitrogen	5.5752	0.0208	3.7483	0.0272	0.1937	0.0122
CO2	9.1335	0.0341	9.6471	0.0701	0.4870	0.0306
H2S	0.0005	0.0000	0.0004	0.0000	0.0000	0.0000
H2O	0.3945	0.0015	0.1706	0.0012	0.0071	0.0004
NBP[1]95*	0.1425	0.0005	0.2323	0.0017	0.0142	0.0009
NBP[1]121*	0.1318	0.0005	0.2305	0.0017	0.0139	0.0009
NBP[1]147*	0.1254	0.0005	0.2414	0.0018	0.0144	0.0009
NBP[1]171*	0.1733	0.0006	0.3646	0.0027	0.0213	0.0013
NBP[1]195*	0.1579	0.0006	0.3546	0.0026	0.0205	0.0013
NBP[1]222*	0.0732	0.0003	0.1768	0.0013	0.0101	0.0006
NBP[1]248*	0.0375	0.0001	0.0974	0.0007	0.0055	0.0003
NBP[1]273*	0.0181	0.0001	0.0503	0.0004	0.0028	0.0002
NBP[1]299*	0.0083	0.0000	0.0245	0.0002	0.0014	0.0001
NBP[1]325*	0.0033	0.0000	0.0105	0.0001	0.0006	0.0000
NBP[1]351*	0.0015	0.0000	0.0050	0.0000	0.0003	0.0000
NBP[1]377*	0.0007	0.0000	0.0025	0.0000	0.0001	0.0000
NBP[1]402*	0.0003	0.0000	0.0013	0.0000	0.0001	0.0000
NBP[1]428*	0.0002	0.0000	0.0007	0.0000	0.0000	0.0000
NBP[1]454*	0.0001	0.0000	0.0003	0.0000	0.0000	0.0000
NBP[1]480*	0.0000	0.0000	0.0002	0.0000	0.0000	0.0000
NBP[1]505*	0.0000	0.0000	0.0001	0.0000	0.0000	0.0000

* Specified by user.

Material Stream: Pandhi-Gas- (continued)

Fluid Package: Basis-1
Property Package: Peng-Robinson

COMPOSITION

Vapour Phase (continued)

Phase Fraction 1.000

COMPONENTS	MOLAR FLOW (kgmole/h)	MOLE FRACTION	MASS FLOW (tonne/d)	MASS FRACTION	LIQUID VOLUME FLOW (m3/h)	LIQUID VOLUME FRACTION
NBP[1]531*	0.0000	0.0000	0.0000	0.0000	0.0000	0.0000
NBP[1]557*	0.0000	0.0000	0.0000	0.0000	0.0000	0.0000
NBP[1]582*	0.0000	0.0000	0.0000	0.0000	0.0000	0.0000
NBP[1]608*	0.0000	0.0000	0.0000	0.0000	0.0000	0.0000
NBP[1]634*	0.0000	0.0000	0.0000	0.0000	0.0000	0.0000
NBP[1]659*	0.0000	0.0000	0.0000	0.0000	0.0000	0.0000
NBP[1]685*	0.0000	0.0000	0.0000	0.0000	0.0000	0.0000
NBP[1]711*	0.0000	0.0000	0.0000	0.0000	0.0000	0.0000
NBP[1]736*	0.0000	0.0000	0.0000	0.0000	0.0000	0.0000
NBP[1]762*	0.0000	0.0000	0.0000	0.0000	0.0000	0.0000
NBP[1]788*	0.0000	0.0000	0.0000	0.0000	0.0000	0.0000
NBP[1]825*	0.0000	0.0000	0.0000	0.0000	0.0000	0.0000
NBP[1]873*	0.0000	0.0000	0.0000	0.0000	0.0000	0.0000
NBP[1]926*	0.0000	0.0000	0.0000	0.0000	0.0000	0.0000
NBP[1]978*	0.0000	0.0000	0.0000	0.0000	0.0000	0.0000
NBP[1]1021*	0.0000	0.0000	0.0000	0.0000	0.0000	0.0000
NBP[1]1075*	0.0000	0.0000	0.0000	0.0000	0.0000	0.0000
NBP[1]1123*	0.0000	0.0000	0.0000	0.0000	0.0000	0.0000
NBP[1]1173*	0.0000	0.0000	0.0000	0.0000	0.0000	0.0000
NBP[1]1250*	0.0000	0.0000	0.0000	0.0000	0.0000	0.0000
NBP[1]1339*	0.0000	0.0000	0.0000	0.0000	0.0000	0.0000
NBP[1]1432*	0.0000	0.0000	0.0000	0.0000	0.0000	0.0000
NBP[1]1528*	0.0000	0.0000	0.0000	0.0000	0.0000	0.0000
NBP[1]1637*	0.0000	0.0000	0.0000	0.0000	0.0000	0.0000
NBP[1]1732*	0.0000	0.0000	0.0000	0.0000	0.0000	0.0000
NBP[1]1819*	0.0001	0.0000	0.0029	0.0000	0.0001	0.0000
NBP[1]1913*	0.0112	0.0000	0.3148	0.0023	0.0121	0.0008
Total	268.0242	1.0000	137.5655	1.0000	15.9186	1.0000

Liquid Phase

Phase Fraction 0.0000

COMPONENTS	MOLAR FLOW (kgmole/h)	MOLE FRACTION	MASS FLOW (tonne/d)	MASS FRACTION	LIQUID VOLUME FLOW (m3/h)	LIQUID VOLUME FRACTION
Methane	0.0000	0.1136	0.0000	0.0144	0.0000	0.0364
Ethane	0.0000	0.0644	0.0000	0.0153	0.0000	0.0326
Propane	0.0000	0.0942	0.0000	0.0329	0.0000	0.0490
i-Butane	0.0000	0.0248	0.0000	0.0114	0.0000	0.0154
n-Butane	0.0000	0.0600	0.0000	0.0276	0.0000	0.0357
i-Pentane	0.0000	0.0217	0.0000	0.0124	0.0000	0.0150
n-Pentane	0.0000	0.0278	0.0000	0.0159	0.0000	0.0191
n-Hexane	0.0000	0.0618	0.0000	0.0422	0.0000	0.0481
Nitrogen	0.0000	0.0013	0.0000	0.0003	0.0000	0.0003
CO2	0.0000	0.0134	0.0000	0.0047	0.0000	0.0043
H2S	0.0000	0.0000	0.0000	0.0000	0.0000	0.0000
H2O	0.0000	0.0006	0.0000	0.0001	0.0000	0.0001
NBP[1]95*	0.0000	0.0082	0.0000	0.0044	0.0000	0.0049
NBP[1]121*	0.0000	0.0116	0.0000	0.0067	0.0000	0.0073
NBP[1]147*	0.0000	0.0172	0.0000	0.0109	0.0000	0.0118
NBP[1]171*	0.0000	0.0365	0.0000	0.0253	0.0000	0.0269
NBP[1]195*	0.0000	0.0516	0.0000	0.0382	0.0000	0.0401
NBP[1]222*	0.0000	0.0408	0.0000	0.0325	0.0000	0.0337
NBP[1]248*	0.0000	0.0353	0.0000	0.0302	0.0000	0.0309
NBP[1]273*	0.0000	0.0291	0.0000	0.0266	0.0000	0.0270
NBP[1]299*	0.0000	0.0230	0.0000	0.0225	0.0000	0.0225
NBP[1]325*	0.0000	0.0168	0.0000	0.0175	0.0000	0.0173

Licensed to: PETROCHEMICAL ENGINEERIN
* Specified by user.

Material Stream: Pandhi-Gas- (continued)

Fluid Package: Basis-1
Property Package: Peng-Robinson

COMPOSITION

Liquid Phase (continued)

Phase Fraction 0.0000

COMPONENTS	MOLAR FLOW (kgmole/h)	MOLE FRACTION	MASS FLOW (tonne/d)	MASS FRACTION	LIQUID VOLUME FLOW (m3/h)	LIQUID VOLUME FRACTION
NBP[1]351*	0.0000	0.0137	0.0000	0.0151	0.0000	0.0148
NBP[1]377*	0.0000	0.0126	0.0000	0.0148	0.0000	0.0144
NBP[1]402*	0.0000	0.0116	0.0000	0.0145	0.0000	0.0139
NBP[1]428*	0.0000	0.0110	0.0000	0.0147	0.0000	0.0140
NBP[1]454*	0.0000	0.0110	0.0000	0.0157	0.0000	0.0148
NBP[1]480*	0.0000	0.0111	0.0000	0.0170	0.0000	0.0159
NBP[1]505*	0.0000	0.0108	0.0000	0.0176	0.0000	0.0162
NBP[1]531*	0.0000	0.0104	0.0000	0.0180	0.0000	0.0165
NBP[1]557*	0.0000	0.0100	0.0000	0.0185	0.0000	0.0168
NBP[1]582*	0.0000	0.0096	0.0000	0.0188	0.0000	0.0169
NBP[1]608*	0.0000	0.0092	0.0000	0.0192	0.0000	0.0171
NBP[1]634*	0.0000	0.0090	0.0000	0.0199	0.0000	0.0177
NBP[1]659*	0.0000	0.0089	0.0000	0.0207	0.0000	0.0182
NBP[1]685*	0.0000	0.0092	0.0000	0.0227	0.0000	0.0198
NBP[1]711*	0.0000	0.0096	0.0000	0.0249	0.0000	0.0216
NBP[1]736*	0.0000	0.0095	0.0000	0.0258	0.0000	0.0221
NBP[1]762*	0.0000	0.0093	0.0000	0.0263	0.0000	0.0225
NBP[1]788*	0.0000	0.0089	0.0000	0.0267	0.0000	0.0226
NBP[1]825*	0.0000	0.0149	0.0000	0.0481	0.0000	0.0404
NBP[1]873*	0.0000	0.0103	0.0000	0.0359	0.0000	0.0298
NBP[1]926*	0.0000	0.0081	0.0000	0.0305	0.0000	0.0250
NBP[1]978*	0.0000	0.0083	0.0000	0.0343	0.0000	0.0277
NBP[1]1021*	0.0000	0.0041	0.0000	0.0179	0.0000	0.0143
NBP[1]1075*	0.0000	0.0025	0.0000	0.0117	0.0000	0.0093
NBP[1]1123*	0.0000	0.0023	0.0000	0.0116	0.0000	0.0091
NBP[1]1173*	0.0000	0.0017	0.0000	0.0088	0.0000	0.0069
NBP[1]1250*	0.0000	0.0022	0.0000	0.0125	0.0000	0.0096
NBP[1]1339*	0.0000	0.0020	0.0000	0.0130	0.0000	0.0098
NBP[1]1432*	0.0000	0.0014	0.0000	0.0100	0.0000	0.0074
NBP[1]1528*	0.0000	0.0010	0.0000	0.0076	0.0000	0.0055
NBP[1]1637*	0.0000	0.0007	0.0000	0.0056	0.0000	0.0041
NBP[1]1732*	0.0000	0.0006	0.0000	0.0048	0.0000	0.0034
NBP[1]1819*	0.0000	0.0005	0.0000	0.0047	0.0000	0.0034
NBP[1]1913*	0.0000	0.0000	0.0000	0.0000	0.0000	0.0000
Total	0.0000	1.0000	0.0000	1.0000	0.0000	1.0000

Aqueous Phase

Phase Fraction 0.0000

COMPONENTS	MOLAR FLOW (kgmole/h)	MOLE FRACTION	MASS FLOW (tonne/d)	MASS FRACTION	LIQUID VOLUME FLOW (m3/h)	LIQUID VOLUME FRACTION
Methane	0.0000	0.0000	0.0000	0.0000	0.0000	0.0000
Ethane	0.0000	0.0000	0.0000	0.0000	0.0000	0.0000
Propane	0.0000	0.0000	0.0000	0.0000	0.0000	0.0000
i-Butane	0.0000	0.0000	0.0000	0.0000	0.0000	0.0000
n-Butane	0.0000	0.0000	0.0000	0.0000	0.0000	0.0000
i-Pentane	0.0000	0.0000	0.0000	0.0000	0.0000	0.0000
n-Pentane	0.0000	0.0000	0.0000	0.0000	0.0000	0.0000
n-Hexane	0.0000	0.0000	0.0000	0.0000	0.0000	0.0000
Nitrogen	0.0000	0.0000	0.0000	0.0000	0.0000	0.0000
CO2	0.0000	0.0004	0.0000	0.0010	0.0000	0.0012
H2S	0.0000	0.0000	0.0000	0.0000	0.0000	0.0000
H2O	0.0000	0.9996	0.0000	0.9990	0.0000	0.9988
NBP[1]95*	0.0000	0.0000	0.0000	0.0000	0.0000	0.0000
NBP[1]121*	0.0000	0.0000	0.0000	0.0000	0.0000	0.0000
NBP[1]147*	0.0000	0.0000	0.0000	0.0000	0.0000	0.0000

* Specified by user.

Material Stream: Pandhi-Gas- (continued)

Fluid Package: Basis-1
Property Package: Peng-Robinson

COMPOSITION

Aqueous Phase (continued)

Phase Fraction 0.0000

COMPONENTS	MOLAR FLOW (kgmole/h)	MOLE FRACTION	MASS FLOW (tonne/d)	MASS FRACTION	LIQUID VOLUME FLOW (m3/h)	LIQUID VOLUME FRACTION
NBP[1]171*	0.0000	0.0000	0.0000	0.0000	0.0000	0.0000
NBP[1]195*	0.0000	0.0000	0.0000	0.0000	0.0000	0.0000
NBP[1]222*	0.0000	0.0000	0.0000	0.0000	0.0000	0.0000
NBP[1]248*	0.0000	0.0000	0.0000	0.0000	0.0000	0.0000
NBP[1]273*	0.0000	0.0000	0.0000	0.0000	0.0000	0.0000
NBP[1]299*	0.0000	0.0000	0.0000	0.0000	0.0000	0.0000
NBP[1]325*	0.0000	0.0000	0.0000	0.0000	0.0000	0.0000
NBP[1]351*	0.0000	0.0000	0.0000	0.0000	0.0000	0.0000
NBP[1]377*	0.0000	0.0000	0.0000	0.0000	0.0000	0.0000
NBP[1]402*	0.0000	0.0000	0.0000	0.0000	0.0000	0.0000
NBP[1]428*	0.0000	0.0000	0.0000	0.0000	0.0000	0.0000
NBP[1]454*	0.0000	0.0000	0.0000	0.0000	0.0000	0.0000
NBP[1]480*	0.0000	0.0000	0.0000	0.0000	0.0000	0.0000
NBP[1]505*	0.0000	0.0000	0.0000	0.0000	0.0000	0.0000
NBP[1]531*	0.0000	0.0000	0.0000	0.0000	0.0000	0.0000
NBP[1]557*	0.0000	0.0000	0.0000	0.0000	0.0000	0.0000
NBP[1]582*	0.0000	0.0000	0.0000	0.0000	0.0000	0.0000
NBP[1]608*	0.0000	0.0000	0.0000	0.0000	0.0000	0.0000
NBP[1]634*	0.0000	0.0000	0.0000	0.0000	0.0000	0.0000
NBP[1]659*	0.0000	0.0000	0.0000	0.0000	0.0000	0.0000
NBP[1]685*	0.0000	0.0000	0.0000	0.0000	0.0000	0.0000
NBP[1]711*	0.0000	0.0000	0.0000	0.0000	0.0000	0.0000
NBP[1]736*	0.0000	0.0000	0.0000	0.0000	0.0000	0.0000
NBP[1]762*	0.0000	0.0000	0.0000	0.0000	0.0000	0.0000
NBP[1]788*	0.0000	0.0000	0.0000	0.0000	0.0000	0.0000
NBP[1]825*	0.0000	0.0000	0.0000	0.0000	0.0000	0.0000
NBP[1]873*	0.0000	0.0000	0.0000	0.0000	0.0000	0.0000
NBP[1]926*	0.0000	0.0000	0.0000	0.0000	0.0000	0.0000
NBP[1]978*	0.0000	0.0000	0.0000	0.0000	0.0000	0.0000
NBP[1]1021*	0.0000	0.0000	0.0000	0.0000	0.0000	0.0000
NBP[1]1075*	0.0000	0.0000	0.0000	0.0000	0.0000	0.0000
NBP[1]1123*	0.0000	0.0000	0.0000	0.0000	0.0000	0.0000
NBP[1]1173*	0.0000	0.0000	0.0000	0.0000	0.0000	0.0000
NBP[1]1250*	0.0000	0.0000	0.0000	0.0000	0.0000	0.0000
NBP[1]1339*	0.0000	0.0000	0.0000	0.0000	0.0000	0.0000
NBP[1]1432*	0.0000	0.0000	0.0000	0.0000	0.0000	0.0000
NBP[1]1528*	0.0000	0.0000	0.0000	0.0000	0.0000	0.0000
NBP[1]1637*	0.0000	0.0000	0.0000	0.0000	0.0000	0.0000
NBP[1]1732*	0.0000	0.0000	0.0000	0.0000	0.0000	0.0000
NBP[1]1819*	0.0000	0.0000	0.0000	0.0000	0.0000	0.0000
NBP[1]1913*	0.0000	0.0000	0.0000	0.0000	0.0000	0.0000
Total	0.0000	1.0000	0.0000	1.0000	0.0000	1.0000

Material Stream: Pandhi-W

Fluid Package: Basis-1
Property Package: Peng-Robinson

CONDITIONS

		Overall	Vapour Phase	Liquid Phase	Aqueous Phase
Vapour / Phase Fraction		0.0000	0.0000	0.0000	1.0000
Temperature:	(F)	84.79	84.79	84.79	84.79
Pressure:	(psig)	445.0	445.0	445.0	445.0
Molar Flow	(MMSCFD)	2.135	0.0000	0.0000	2.135
Mass Flow	(tonne/d)	46.00	0.0000	0.0000	46.00
Std Ideal Liq Vol Flow	(barrel/day)	290.0	0.0000	0.0000	290.0

* Specified by user.

Material Stream: Pandhi-W (continued)

Fluid Package: Basis-1
Property Package: Peng-Robinson

CONDITIONS

	Overall	Vapour Phase	Liquid Phase	Aqueous Phase
Molar Enthalpy (kJ/kgmole)	-2.859e+005	-8.928e+004	-2.875e+005	-2.859e+005
Molar Entropy (kJ/kgmole-C)	54.83	159.3	218.7	54.83
Heat Flow (MMBtu/hr)	-28.81	0.0000	0.0000	-28.81
Liq Vol Flow @Std Cond (barrel/day)	285.1 *	0.0000	0.0000	285.1

PROPERTIES

	Overall	Vapour Phase	Liquid Phase	Aqueous Phase
Molecular Weight	18.03	21.39	126.4	18.03
Molar Density (kgmole/m3)	55.76	1.408	6.079	55.76
Mass Density (kg/m3)	1005	30.10	768.1	1005
Act. Volume Flow (barrel/day)	287.9	0.0000	0.0000	287.9
Mass Enthalpy (kJ/kg)	-1.586e+004	-4175	-2275	-1.586e+004
Mass Entropy (kJ/kg-C)	3.042	7.448	1.731	3.042
Heat Capacity (kJ/kgmole-C)	77.64	47.13	253.8	77.64
Mass Heat Capacity (kJ/kg-C)	4.307	2.204	2.009	4.307
LHV Molar Basis (Std) (Btu/SCF)	1.809e-004	---	---	1.809e-004
LHV Mass Basis (Std) (kJ/kg)	8.858e-003	---	---	8.858e-003
Phase Fraction [Vol. Basis]	---	---	---	1.000
Phase Fraction [Mass Basis]	0.0000	0.0000	0.0000	1.000
Partial Pressure of CO2 (psig)	-14.70	---	---	---
Cost Based on Flow (Cost/s)	0.0000	0.0000	0.0000	0.0000
Act. Gas Flow (ACT_m3/h)	---	---	---	---
Avg. Liq. Density (kgmole/m3)	55.35	16.84	5.980	55.35
Specific Heat (kJ/kgmole-C)	77.64	47.13	253.8	77.64
Std. Gas Flow (STD_m3/h)	2514	0.0000	0.0000	2514
Std. Ideal Liq. Mass Density (kg/m3)	997.8	360.1	755.6	997.8
Act. Liq. Flow (barrel/day)	287.9	---	---	287.9
Z Factor	---	0.8953	0.2073	2.260e-002
Watson K	8.497	17.28	11.99	8.497
User Property	---	---	---	---
Partial Pressure of H2S (psig)	-14.70	---	---	---
Cp/(Cp - R)	1.120	1.214	1.034	1.120
Cp/Cv	1.149	1.388	1.034	1.149
Heat of Vap. (kJ/kgmole)	3.304e+004	---	---	---
Kinematic Viscosity (cSt)	0.8047	0.3993	12.25	0.8047
Liq. Mass Density (Std. Cond) (kg/m3)	1015	0.9081	781.8	1015
Liq. Vol. Flow (Std. Cond) (barrel/day)	285.1	0.0000	0.0000	285.1
Liquid Fraction	1.000	0.0000	1.000	1.000
Molar Volume (m3/kgmole)	1.793e-002	0.7104	0.1645	1.793e-002
Mass Heat of Vap. (kJ/kg)	1833	---	---	---
Phase Fraction [Molar Basis]	0.0000	0.0000	0.0000	1.0000
Surface Tension (dyne/cm)	71.32	---	15.96	71.32
Thermal Conductivity (W/m-K)	0.6173	3.302e-002	0.1006	0.6173
Viscosity (cP)	0.8089	1.202e-002	9.409	0.8089
Cv (Semi-Ideal) (kJ/kgmole-C)	69.33	38.81	245.5	69.33
Mass Cv (Semi-Ideal) (kJ/kg-C)	3.846	1.815	1.943	3.846
Cv (kJ/kgmole-C)	67.56	33.96	245.5	67.56
Mass Cv (kJ/kg-C)	3.748	1.588	1.943	3.748
Cv (Ent. Method) (kJ/kgmole-C)	66.88	-3697	---	66.88
Mass Cv (Ent. Method) (kJ/kg-C)	3.711	-172.9	---	3.711
Cp/Cv (Ent. Method)	1.161	-1.275e-002	---	1.161
Reid VP at 37.8 C (psig)	---	---	97.87	---
True VP at 37.8 C (psig)	17.11	3607	475.9	17.11
Liq. Vol. Flow - Sum(Std. Cond) (barrel/day)	285.1	0.0000	0.0000	285.1
HHV Molar Basis (Std) (Btu/SCF)	46.45	---	---	46.45
HHV Mass Basis (Std) (kJ/kg)	2274	---	---	2274
CO2 Loading	---	---	---	---

* Specified by user.

Material Stream: Pandhi-W (continued)

Fluid Package: Basis-1
Property Package: Peng-Robinson

PROPERTIES

	Overall	Vapour Phase	Liquid Phase	Aqueous Phase
CO2 App ML Con (kgmole/m3)	2.216e-002	---	---	2.216e-002
CO2 App WT Con (kgmol/kg)	2.204e-005	---	---	2.204e-005
Phase Fraction [Act. Vol. Basis]	0.0000	0.0000	0.0000	1.000
Mass Exergy (kJ/kg)	3.750	---	---	---
Viscosity Index	9.106e-002	---	---	---
Ideal Gas Cp/Cv	1.329	1.249	1.043	1.329
Ideal Gas Cp (kJ/kgmole-C)	33.60	41.72	200.0	33.60
Mass Ideal Gas Cp (kJ/kg-C)	1.864	1.951	1.583	1.864
Bubble Point Pressure (psig)	12.46	---	---	---

COMPOSITION

Overall Phase

Vapour Fraction 0.0000

COMPONENTS	MOLAR FLOW (kgmole/h)	MOLE FRACTION	MASS FLOW (tonne/d)	MASS FRACTION	LIQUID VOLUME FLOW (m3/h)	LIQUID VOLUME FRACTION
Methane	0.0000	0.0000	0.0000	0.0000	0.0000	0.0000
Ethane	0.0000	0.0000	0.0000	0.0000	0.0000	0.0000
Propane	0.0000	0.0000	0.0000	0.0000	0.0000	0.0000
i-Butane	0.0000	0.0000	0.0000	0.0000	0.0000	0.0000
n-Butane	0.0000	0.0000	0.0000	0.0000	0.0000	0.0000
i-Pentane	0.0000	0.0000	0.0000	0.0000	0.0000	0.0000
n-Pentane	0.0000	0.0000	0.0000	0.0000	0.0000	0.0000
n-Hexane	0.0000	0.0000	0.0000	0.0000	0.0000	0.0000
Nitrogen	0.0008	0.0000	0.0006	0.0000	0.0000	0.0000
CO2	0.0423	0.0004	0.0446	0.0010	0.0023	0.0012
H2S	0.0000	0.0000	0.0000	0.0000	0.0000	0.0000
H2O	106.2938	0.9996	45.9575	0.9990	1.9188	0.9988
NBP[1]95*	0.0000	0.0000	0.0000	0.0000	0.0000	0.0000
NBP[1]121*	0.0000	0.0000	0.0000	0.0000	0.0000	0.0000
NBP[1]147*	0.0000	0.0000	0.0000	0.0000	0.0000	0.0000
NBP[1]171*	0.0000	0.0000	0.0000	0.0000	0.0000	0.0000
NBP[1]195*	0.0000	0.0000	0.0000	0.0000	0.0000	0.0000
NBP[1]222*	0.0000	0.0000	0.0000	0.0000	0.0000	0.0000
NBP[1]248*	0.0000	0.0000	0.0000	0.0000	0.0000	0.0000
NBP[1]273*	0.0000	0.0000	0.0000	0.0000	0.0000	0.0000
NBP[1]299*	0.0000	0.0000	0.0000	0.0000	0.0000	0.0000
NBP[1]325*	0.0000	0.0000	0.0000	0.0000	0.0000	0.0000
NBP[1]351*	0.0000	0.0000	0.0000	0.0000	0.0000	0.0000
NBP[1]377*	0.0000	0.0000	0.0000	0.0000	0.0000	0.0000
NBP[1]402*	0.0000	0.0000	0.0000	0.0000	0.0000	0.0000
NBP[1]428*	0.0000	0.0000	0.0000	0.0000	0.0000	0.0000
NBP[1]454*	0.0000	0.0000	0.0000	0.0000	0.0000	0.0000
NBP[1]480*	0.0000	0.0000	0.0000	0.0000	0.0000	0.0000
NBP[1]505*	0.0000	0.0000	0.0000	0.0000	0.0000	0.0000
NBP[1]531*	0.0000	0.0000	0.0000	0.0000	0.0000	0.0000
NBP[1]557*	0.0000	0.0000	0.0000	0.0000	0.0000	0.0000
NBP[1]582*	0.0000	0.0000	0.0000	0.0000	0.0000	0.0000
NBP[1]608*	0.0000	0.0000	0.0000	0.0000	0.0000	0.0000
NBP[1]634*	0.0000	0.0000	0.0000	0.0000	0.0000	0.0000
NBP[1]659*	0.0000	0.0000	0.0000	0.0000	0.0000	0.0000
NBP[1]685*	0.0000	0.0000	0.0000	0.0000	0.0000	0.0000
NBP[1]711*	0.0000	0.0000	0.0000	0.0000	0.0000	0.0000
NBP[1]736*	0.0000	0.0000	0.0000	0.0000	0.0000	0.0000
NBP[1]762*	0.0000	0.0000	0.0000	0.0000	0.0000	0.0000
NBP[1]788*	0.0000	0.0000	0.0000	0.0000	0.0000	0.0000
NBP[1]825*	0.0000	0.0000	0.0000	0.0000	0.0000	0.0000
NBP[1]873*	0.0000	0.0000	0.0000	0.0000	0.0000	0.0000

* Specified by user.

Material Stream: Pandhi-W (continued)

Fluid Package: Basis-1
Property Package: Peng-Robinson

COMPOSITION

Overall Phase (continued)

Vapour Fraction 0.0000

COMPONENTS	MOLAR FLOW (kgmole/h)	MOLE FRACTION	MASS FLOW (tonne/d)	MASS FRACTION	LIQUID VOLUME FLOW (m3/h)	LIQUID VOLUME FRACTION
NBP[1]926*	0.0000	0.0000	0.0000	0.0000	0.0000	0.0000
NBP[1]978*	0.0000	0.0000	0.0000	0.0000	0.0000	0.0000
NBP[1]1021*	0.0000	0.0000	0.0000	0.0000	0.0000	0.0000
NBP[1]1075*	0.0000	0.0000	0.0000	0.0000	0.0000	0.0000
NBP[1]1123*	0.0000	0.0000	0.0000	0.0000	0.0000	0.0000
NBP[1]1173*	0.0000	0.0000	0.0000	0.0000	0.0000	0.0000
NBP[1]1250*	0.0000	0.0000	0.0000	0.0000	0.0000	0.0000
NBP[1]1339*	0.0000	0.0000	0.0000	0.0000	0.0000	0.0000
NBP[1]1432*	0.0000	0.0000	0.0000	0.0000	0.0000	0.0000
NBP[1]1528*	0.0000	0.0000	0.0000	0.0000	0.0000	0.0000
NBP[1]1637*	0.0000	0.0000	0.0000	0.0000	0.0000	0.0000
NBP[1]1732*	0.0000	0.0000	0.0000	0.0000	0.0000	0.0000
NBP[1]1819*	0.0000	0.0000	0.0000	0.0000	0.0000	0.0000
NBP[1]1913*	0.0000	0.0000	0.0000	0.0000	0.0000	0.0000
Total	106.3369	1.0000	46.0026	1.0000	1.9210	1.0000

Vapour Phase

Phase Fraction 0.0000

COMPONENTS	MOLAR FLOW (kgmole/h)	MOLE FRACTION	MASS FLOW (tonne/d)	MASS FRACTION	LIQUID VOLUME FLOW (m3/h)	LIQUID VOLUME FRACTION
Methane	0.0000	0.7649	0.0000	0.5738	0.0000	0.6901
Ethane	0.0000	0.1032	0.0000	0.1451	0.0000	0.1469
Propane	0.0000	0.0507	0.0000	0.1046	0.0000	0.0743
i-Butane	0.0000	0.0059	0.0000	0.0161	0.0000	0.0103
n-Butane	0.0000	0.0108	0.0000	0.0292	0.0000	0.0181
i-Pentane	0.0000	0.0017	0.0000	0.0058	0.0000	0.0034
n-Pentane	0.0000	0.0017	0.0000	0.0059	0.0000	0.0033
n-Hexane	0.0000	0.0014	0.0000	0.0056	0.0000	0.0030
Nitrogen	0.0000	0.0208	0.0000	0.0272	0.0000	0.0122
CO2	0.0000	0.0341	0.0000	0.0701	0.0000	0.0306
H2S	0.0000	0.0000	0.0000	0.0000	0.0000	0.0000
H2O	0.0000	0.0015	0.0000	0.0012	0.0000	0.0004
NBP[1]95*	0.0000	0.0005	0.0000	0.0017	0.0000	0.0009
NBP[1]121*	0.0000	0.0005	0.0000	0.0017	0.0000	0.0009
NBP[1]147*	0.0000	0.0005	0.0000	0.0018	0.0000	0.0009
NBP[1]171*	0.0000	0.0006	0.0000	0.0027	0.0000	0.0013
NBP[1]195*	0.0000	0.0006	0.0000	0.0026	0.0000	0.0013
NBP[1]222*	0.0000	0.0003	0.0000	0.0013	0.0000	0.0006
NBP[1]248*	0.0000	0.0001	0.0000	0.0007	0.0000	0.0003
NBP[1]273*	0.0000	0.0001	0.0000	0.0004	0.0000	0.0002
NBP[1]299*	0.0000	0.0000	0.0000	0.0002	0.0000	0.0001
NBP[1]325*	0.0000	0.0000	0.0000	0.0001	0.0000	0.0000
NBP[1]351*	0.0000	0.0000	0.0000	0.0000	0.0000	0.0000
NBP[1]377*	0.0000	0.0000	0.0000	0.0000	0.0000	0.0000
NBP[1]402*	0.0000	0.0000	0.0000	0.0000	0.0000	0.0000
NBP[1]428*	0.0000	0.0000	0.0000	0.0000	0.0000	0.0000
NBP[1]454*	0.0000	0.0000	0.0000	0.0000	0.0000	0.0000
NBP[1]480*	0.0000	0.0000	0.0000	0.0000	0.0000	0.0000
NBP[1]505*	0.0000	0.0000	0.0000	0.0000	0.0000	0.0000
NBP[1]531*	0.0000	0.0000	0.0000	0.0000	0.0000	0.0000
NBP[1]557*	0.0000	0.0000	0.0000	0.0000	0.0000	0.0000
NBP[1]582*	0.0000	0.0000	0.0000	0.0000	0.0000	0.0000
NBP[1]608*	0.0000	0.0000	0.0000	0.0000	0.0000	0.0000
NBP[1]634*	0.0000	0.0000	0.0000	0.0000	0.0000	0.0000
NBP[1]659*	0.0000	0.0000	0.0000	0.0000	0.0000	0.0000

* Specified by user.

Material Stream: Pandhi-W (continued)

Fluid Package: Basis-1
Property Package: Peng-Robinson

COMPOSITION

Vapour Phase (continued)

Phase Fraction 0.0000

COMPONENTS	MOLAR FLOW (kgmole/h)	MOLE FRACTION	MASS FLOW (tonne/d)	MASS FRACTION	LIQUID VOLUME FLOW (m3/h)	LIQUID VOLUME FRACTION
NBP[1]685*	0.0000	0.0000	0.0000	0.0000	0.0000	0.0000
NBP[1]711*	0.0000	0.0000	0.0000	0.0000	0.0000	0.0000
NBP[1]736*	0.0000	0.0000	0.0000	0.0000	0.0000	0.0000
NBP[1]762*	0.0000	0.0000	0.0000	0.0000	0.0000	0.0000
NBP[1]788*	0.0000	0.0000	0.0000	0.0000	0.0000	0.0000
NBP[1]825*	0.0000	0.0000	0.0000	0.0000	0.0000	0.0000
NBP[1]873*	0.0000	0.0000	0.0000	0.0000	0.0000	0.0000
NBP[1]926*	0.0000	0.0000	0.0000	0.0000	0.0000	0.0000
NBP[1]978*	0.0000	0.0000	0.0000	0.0000	0.0000	0.0000
NBP[1]1021*	0.0000	0.0000	0.0000	0.0000	0.0000	0.0000
NBP[1]1075*	0.0000	0.0000	0.0000	0.0000	0.0000	0.0000
NBP[1]1123*	0.0000	0.0000	0.0000	0.0000	0.0000	0.0000
NBP[1]1173*	0.0000	0.0000	0.0000	0.0000	0.0000	0.0000
NBP[1]1250*	0.0000	0.0000	0.0000	0.0000	0.0000	0.0000
NBP[1]1339*	0.0000	0.0000	0.0000	0.0000	0.0000	0.0000
NBP[1]1432*	0.0000	0.0000	0.0000	0.0000	0.0000	0.0000
NBP[1]1528*	0.0000	0.0000	0.0000	0.0000	0.0000	0.0000
NBP[1]1637*	0.0000	0.0000	0.0000	0.0000	0.0000	0.0000
NBP[1]1732*	0.0000	0.0000	0.0000	0.0000	0.0000	0.0000
NBP[1]1819*	0.0000	0.0000	0.0000	0.0000	0.0000	0.0000
NBP[1]1913*	0.0000	0.0000	0.0000	0.0023	0.0000	0.0008
Total	0.0000	1.0000	0.0000	1.0000	0.0000	1.0000

Liquid Phase

Phase Fraction 0.0000

COMPONENTS	MOLAR FLOW (kgmole/h)	MOLE FRACTION	MASS FLOW (tonne/d)	MASS FRACTION	LIQUID VOLUME FLOW (m3/h)	LIQUID VOLUME FRACTION
Methane	0.0000	0.1136	0.0000	0.0144	0.0000	0.0364
Ethane	0.0000	0.0644	0.0000	0.0153	0.0000	0.0326
Propane	0.0000	0.0942	0.0000	0.0329	0.0000	0.0490
i-Butane	0.0000	0.0248	0.0000	0.0114	0.0000	0.0154
n-Butane	0.0000	0.0600	0.0000	0.0276	0.0000	0.0357
i-Pentane	0.0000	0.0217	0.0000	0.0124	0.0000	0.0150
n-Pentane	0.0000	0.0278	0.0000	0.0159	0.0000	0.0191
n-Hexane	0.0000	0.0618	0.0000	0.0422	0.0000	0.0481
Nitrogen	0.0000	0.0013	0.0000	0.0003	0.0000	0.0003
CO2	0.0000	0.0134	0.0000	0.0047	0.0000	0.0043
H2S	0.0000	0.0000	0.0000	0.0000	0.0000	0.0000
H2O	0.0000	0.0006	0.0000	0.0001	0.0000	0.0001
NBP[1]95*	0.0000	0.0082	0.0000	0.0044	0.0000	0.0049
NBP[1]121*	0.0000	0.0116	0.0000	0.0067	0.0000	0.0073
NBP[1]147*	0.0000	0.0172	0.0000	0.0109	0.0000	0.0118
NBP[1]171*	0.0000	0.0365	0.0000	0.0253	0.0000	0.0269
NBP[1]195*	0.0000	0.0516	0.0000	0.0382	0.0000	0.0401
NBP[1]222*	0.0000	0.0408	0.0000	0.0325	0.0000	0.0337
NBP[1]248*	0.0000	0.0353	0.0000	0.0302	0.0000	0.0309
NBP[1]273*	0.0000	0.0291	0.0000	0.0266	0.0000	0.0270
NBP[1]299*	0.0000	0.0230	0.0000	0.0225	0.0000	0.0225
NBP[1]325*	0.0000	0.0168	0.0000	0.0175	0.0000	0.0173
NBP[1]351*	0.0000	0.0137	0.0000	0.0151	0.0000	0.0148
NBP[1]377*	0.0000	0.0126	0.0000	0.0148	0.0000	0.0144
NBP[1]402*	0.0000	0.0116	0.0000	0.0145	0.0000	0.0139
NBP[1]428*	0.0000	0.0110	0.0000	0.0147	0.0000	0.0140
NBP[1]454*	0.0000	0.0110	0.0000	0.0157	0.0000	0.0148
NBP[1]480*	0.0000	0.0111	0.0000	0.0170	0.0000	0.0159

* Specified by user.

Material Stream: Pandhi-W (continued)

Fluid Package: Basis-1
Property Package: Peng-Robinson

COMPOSITION

Liquid Phase (continued)

Phase Fraction 0.0000

COMPONENTS	MOLAR FLOW (kgmole/h)	MOLE FRACTION	MASS FLOW (tonne/d)	MASS FRACTION	LIQUID VOLUME FLOW (m3/h)	LIQUID VOLUME FRACTION
NBP[1]505*	0.0000	0.0108	0.0000	0.0176	0.0000	0.0162
NBP[1]531*	0.0000	0.0104	0.0000	0.0180	0.0000	0.0165
NBP[1]557*	0.0000	0.0100	0.0000	0.0185	0.0000	0.0168
NBP[1]582*	0.0000	0.0096	0.0000	0.0188	0.0000	0.0169
NBP[1]608*	0.0000	0.0092	0.0000	0.0192	0.0000	0.0171
NBP[1]634*	0.0000	0.0090	0.0000	0.0199	0.0000	0.0177
NBP[1]659*	0.0000	0.0089	0.0000	0.0207	0.0000	0.0182
NBP[1]685*	0.0000	0.0092	0.0000	0.0227	0.0000	0.0198
NBP[1]711*	0.0000	0.0096	0.0000	0.0249	0.0000	0.0216
NBP[1]736*	0.0000	0.0095	0.0000	0.0258	0.0000	0.0221
NBP[1]762*	0.0000	0.0093	0.0000	0.0263	0.0000	0.0225
NBP[1]788*	0.0000	0.0089	0.0000	0.0267	0.0000	0.0226
NBP[1]825*	0.0000	0.0149	0.0000	0.0481	0.0000	0.0404
NBP[1]873*	0.0000	0.0103	0.0000	0.0359	0.0000	0.0298
NBP[1]926*	0.0000	0.0081	0.0000	0.0305	0.0000	0.0250
NBP[1]978*	0.0000	0.0083	0.0000	0.0343	0.0000	0.0277
NBP[1]1021*	0.0000	0.0041	0.0000	0.0179	0.0000	0.0143
NBP[1]1075*	0.0000	0.0025	0.0000	0.0117	0.0000	0.0093
NBP[1]1123*	0.0000	0.0023	0.0000	0.0116	0.0000	0.0091
NBP[1]1173*	0.0000	0.0017	0.0000	0.0088	0.0000	0.0069
NBP[1]1250*	0.0000	0.0022	0.0000	0.0125	0.0000	0.0096
NBP[1]1339*	0.0000	0.0020	0.0000	0.0130	0.0000	0.0098
NBP[1]1432*	0.0000	0.0014	0.0000	0.0100	0.0000	0.0074
NBP[1]1528*	0.0000	0.0010	0.0000	0.0076	0.0000	0.0055
NBP[1]1637*	0.0000	0.0007	0.0000	0.0056	0.0000	0.0041
NBP[1]1732*	0.0000	0.0006	0.0000	0.0048	0.0000	0.0034
NBP[1]1819*	0.0000	0.0005	0.0000	0.0047	0.0000	0.0034
NBP[1]1913*	0.0000	0.0000	0.0000	0.0000	0.0000	0.0000
Total	0.0000	1.0000	0.0000	1.0000	0.0000	1.0000

Aqueous Phase

Phase Fraction 1.000

COMPONENTS	MOLAR FLOW (kgmole/h)	MOLE FRACTION	MASS FLOW (tonne/d)	MASS FRACTION	LIQUID VOLUME FLOW (m3/h)	LIQUID VOLUME FRACTION
Methane	0.0000	0.0000	0.0000	0.0000	0.0000	0.0000
Ethane	0.0000	0.0000	0.0000	0.0000	0.0000	0.0000
Propane	0.0000	0.0000	0.0000	0.0000	0.0000	0.0000
i-Butane	0.0000	0.0000	0.0000	0.0000	0.0000	0.0000
n-Butane	0.0000	0.0000	0.0000	0.0000	0.0000	0.0000
i-Pentane	0.0000	0.0000	0.0000	0.0000	0.0000	0.0000
n-Pentane	0.0000	0.0000	0.0000	0.0000	0.0000	0.0000
n-Hexane	0.0000	0.0000	0.0000	0.0000	0.0000	0.0000
Nitrogen	0.0008	0.0000	0.0006	0.0000	0.0000	0.0000
CO2	0.0423	0.0004	0.0446	0.0010	0.0023	0.0012
H2S	0.0000	0.0000	0.0000	0.0000	0.0000	0.0000
H2O	106.2938	0.9996	45.9575	0.9990	1.9188	0.9988
NBP[1]95*	0.0000	0.0000	0.0000	0.0000	0.0000	0.0000
NBP[1]121*	0.0000	0.0000	0.0000	0.0000	0.0000	0.0000
NBP[1]147*	0.0000	0.0000	0.0000	0.0000	0.0000	0.0000
NBP[1]171*	0.0000	0.0000	0.0000	0.0000	0.0000	0.0000
NBP[1]195*	0.0000	0.0000	0.0000	0.0000	0.0000	0.0000
NBP[1]222*	0.0000	0.0000	0.0000	0.0000	0.0000	0.0000
NBP[1]248*	0.0000	0.0000	0.0000	0.0000	0.0000	0.0000
NBP[1]273*	0.0000	0.0000	0.0000	0.0000	0.0000	0.0000
NBP[1]299*	0.0000	0.0000	0.0000	0.0000	0.0000	0.0000

* Specified by user.

Material Stream: Pandhi-W (continued)

Fluid Package: Basis-1
Property Package: Peng-Robinson

COMPOSITION

Aqueous Phase (continued)

Phase Fraction 1.000

COMPONENTS	MOLAR FLOW (kgmole/h)	MOLE FRACTION	MASS FLOW (tonne/d)	MASS FRACTION	LIQUID VOLUME FLOW (m3/h)	LIQUID VOLUME FRACTION
NBP[1]325*	0.0000	0.0000	0.0000	0.0000	0.0000	0.0000
NBP[1]351*	0.0000	0.0000	0.0000	0.0000	0.0000	0.0000
NBP[1]377*	0.0000	0.0000	0.0000	0.0000	0.0000	0.0000
NBP[1]402*	0.0000	0.0000	0.0000	0.0000	0.0000	0.0000
NBP[1]428*	0.0000	0.0000	0.0000	0.0000	0.0000	0.0000
NBP[1]454*	0.0000	0.0000	0.0000	0.0000	0.0000	0.0000
NBP[1]480*	0.0000	0.0000	0.0000	0.0000	0.0000	0.0000
NBP[1]505*	0.0000	0.0000	0.0000	0.0000	0.0000	0.0000
NBP[1]531*	0.0000	0.0000	0.0000	0.0000	0.0000	0.0000
NBP[1]557*	0.0000	0.0000	0.0000	0.0000	0.0000	0.0000
NBP[1]582*	0.0000	0.0000	0.0000	0.0000	0.0000	0.0000
NBP[1]608*	0.0000	0.0000	0.0000	0.0000	0.0000	0.0000
NBP[1]634*	0.0000	0.0000	0.0000	0.0000	0.0000	0.0000
NBP[1]659*	0.0000	0.0000	0.0000	0.0000	0.0000	0.0000
NBP[1]685*	0.0000	0.0000	0.0000	0.0000	0.0000	0.0000
NBP[1]711*	0.0000	0.0000	0.0000	0.0000	0.0000	0.0000
NBP[1]736*	0.0000	0.0000	0.0000	0.0000	0.0000	0.0000
NBP[1]762*	0.0000	0.0000	0.0000	0.0000	0.0000	0.0000
NBP[1]788*	0.0000	0.0000	0.0000	0.0000	0.0000	0.0000
NBP[1]825*	0.0000	0.0000	0.0000	0.0000	0.0000	0.0000
NBP[1]873*	0.0000	0.0000	0.0000	0.0000	0.0000	0.0000
NBP[1]926*	0.0000	0.0000	0.0000	0.0000	0.0000	0.0000
NBP[1]978*	0.0000	0.0000	0.0000	0.0000	0.0000	0.0000
NBP[1]1021*	0.0000	0.0000	0.0000	0.0000	0.0000	0.0000
NBP[1]1075*	0.0000	0.0000	0.0000	0.0000	0.0000	0.0000
NBP[1]1123*	0.0000	0.0000	0.0000	0.0000	0.0000	0.0000
NBP[1]1173*	0.0000	0.0000	0.0000	0.0000	0.0000	0.0000
NBP[1]1250*	0.0000	0.0000	0.0000	0.0000	0.0000	0.0000
NBP[1]1339*	0.0000	0.0000	0.0000	0.0000	0.0000	0.0000
NBP[1]1432*	0.0000	0.0000	0.0000	0.0000	0.0000	0.0000
NBP[1]1528*	0.0000	0.0000	0.0000	0.0000	0.0000	0.0000
NBP[1]1637*	0.0000	0.0000	0.0000	0.0000	0.0000	0.0000
NBP[1]1732*	0.0000	0.0000	0.0000	0.0000	0.0000	0.0000
NBP[1]1819*	0.0000	0.0000	0.0000	0.0000	0.0000	0.0000
NBP[1]1913*	0.0000	0.0000	0.0000	0.0000	0.0000	0.0000
Total	106.3369	1.0000	46.0026	1.0000	1.9210	1.0000

Material Stream: Pandhi-Water-

Fluid Package: Basis-1
Property Package: Peng-Robinson

CONDITIONS

		Overall	Vapour Phase	Liquid Phase	Aqueous Phase
Vapour / Phase Fraction		0.0000	0.0000	0.0000	1.0000
Temperature:	(F)	179.8	179.8	179.8	179.8
Pressure:	(psig)	645.0	645.0	645.0	645.0
Molar Flow	(MMSCFD)	2.069	0.0000	0.0000	2.069
Mass Flow	(tonne/d)	44.56	0.0000	0.0000	44.56
Std Ideal Liq Vol Flow	(barrel/day)	280.9	0.0000	0.0000	280.9
Molar Enthalpy	(kJ/kgmole)	-2.817e+005	-9.014e+004	-3.493e+005	-2.817e+005
Molar Entropy	(kJ/kgmole-C)	67.32	164.0	344.5	67.32
Heat Flow	(MMBtu/hr)	-27.51	0.0000	0.0000	-27.51
Liq Vol Flow @Std Cond	(barrel/day)	276.2 *	0.0000	0.0000	276.2

* Specified by user.

Material Stream: Pandhi-Water- (continued)

Fluid Package: Basis-1
Property Package: Peng-Robinson

PROPERTIES

	Overall	Vapour Phase	Liquid Phase	Aqueous Phase
Molecular Weight	18.02	22.43	165.4	18.02
Molar Density (kgmole/m3)	53.52	1.696	4.626	53.52
Mass Density (kg/m3)	964.6	38.04	765.4	964.6
Act. Volume Flow (barrel/day)	290.6	0.0000	0.0000	290.6
Mass Enthalpy (kJ/kg)	-1.563e+004	-4019	-2111	-1.563e+004
Mass Entropy (kJ/kg-C)	3.736	7.313	2.082	3.736
Heat Capacity (kJ/kgmole-C)	78.40	52.41	362.7	78.40
Mass Heat Capacity (kJ/kg-C)	4.350	2.337	2.192	4.350
LHV Molar Basis (Std) (Btu/SCF)	2.868e-003	---	---	2.868e-003
LHV Mass Basis (Std) (kJ/kg)	0.1405	---	---	0.1405
Phase Fraction [Vol. Basis]	---	---	---	1.000
Phase Fraction [Mass Basis]	0.0000	0.0000	0.0000	1.000
Partial Pressure of CO2 (psig)	-14.70	---	---	---
Cost Based on Flow (Cost/s)	0.0000	0.0000	0.0000	0.0000
Act. Gas Flow (ACT_m3/h)	---	---	---	---
Avg. Liq. Density (kgmole/m3)	55.37	16.65	4.852	55.37
Specific Heat (kJ/kgmole-C)	78.40	52.41	362.7	78.40
Std. Gas Flow (STD_m3/h)	2436	0.0000	0.0000	2436
Std. Ideal Liq. Mass Density (kg/m3)	997.8	373.4	802.7	997.8
Act. Liq. Flow (barrel/day)	290.6	---	---	290.6
Z Factor	---	0.9078	0.3328	2.877e-002
Watson K	8.532	16.94	11.83	8.532
User Property	---	---	---	---
Partial Pressure of H2S (psig)	-14.70	---	---	---
Cp/(Cp - R)	1.119	1.189	1.023	1.119
Cp/Cv	1.169	1.337	1.187	1.169
Heat of Vap. (kJ/kgmole)	3.085e+004	---	---	---
Kinematic Viscosity (cSt)	0.3544	0.3698	1.262	0.3544
Liq. Mass Density (Std. Cond) (kg/m3)	1015	0.9528	824.0	1015
Liq. Vol. Flow (Std. Cond) (barrel/day)	276.2	0.0000	0.0000	276.2
Liquid Fraction	1.000	0.0000	1.000	1.000
Molar Volume (m3/kgmole)	1.868e-002	0.5896	0.2162	1.868e-002
Mass Heat of Vap. (kJ/kg)	1712	---	---	---
Phase Fraction [Molar Basis]	0.0000	0.0000	0.0000	1.0000
Surface Tension (dyne/cm)	61.93	---	15.07	61.93
Thermal Conductivity (W/m-K)	0.6712	4.029e-002	9.787e-002	0.6712
Viscosity (cP)	0.3418	1.407e-002	0.9662	0.3418
Cv (Semi-Ideal) (kJ/kgmole-C)	70.08	44.10	354.4	70.08
Mass Cv (Semi-Ideal) (kJ/kg-C)	3.889	1.966	2.142	3.889
Cv (kJ/kgmole-C)	67.08	39.19	305.5	67.08
Mass Cv (kJ/kg-C)	3.722	1.747	1.846	3.722
Cv (Ent. Method) (kJ/kgmole-C)	65.09	-4561	---	65.09
Mass Cv (Ent. Method) (kJ/kg-C)	3.612	-203.4	---	3.612
Cp/Cv (Ent. Method)	1.204	-1.149e-002	---	1.204
Reid VP at 37.8 C (psig)	---	---	69.51	---
True VP at 37.8 C (psig)	8631	5017	497.3	8631
Liq. Vol. Flow - Sum(Std. Cond) (barrel/day)	276.2	0.0000	0.0000	276.2
HHV Molar Basis (Std) (Btu/SCF)	46.45	---	---	46.45
HHV Mass Basis (Std) (kJ/kg)	2275	---	---	2275
CO2 Loading	---	---	---	---
CO2 App ML Con (kgmole/m3)	1.357e-002	---	---	1.357e-002
CO2 App WT Con (kgmol/kg)	1.407e-005	---	---	1.407e-005
Phase Fraction [Act. Vol. Basis]	0.0000	0.0000	0.0000	1.000
Mass Exergy (kJ/kg)	26.30	---	---	---
Viscosity Index	-17.24	---	---	---
Ideal Gas Cp/Cv	1.324	1.216	1.029	1.324
Ideal Gas Cp (kJ/kgmole-C)	33.95	46.85	299.3	33.95

* Specified by user.

Material Stream: Pandhi-Water- (continued)

Fluid Package: Basis-1
Property Package: Peng-Robinson

PROPERTIES

	Overall	Vapour Phase	Liquid Phase	Aqueous Phase
Mass Ideal Gas Cp (kJ/kg-C)	1.884	2.089	1.809	1.884
Bubble Point Pressure (psig)	371.9	---	---	---

COMPOSITION

Overall Phase

Vapour Fraction 0.0000

COMPONENTS	MOLAR FLOW (kgmole/h)	MOLE FRACTION	MASS FLOW (tonne/d)	MASS FRACTION	LIQUID VOLUME FLOW (m3/h)	LIQUID VOLUME FRACTION
Methane	0.0003	0.0000	0.0001	0.0000	0.0000	0.0000
Ethane	0.0000	0.0000	0.0000	0.0000	0.0000	0.0000
Propane	0.0000	0.0000	0.0000	0.0000	0.0000	0.0000
i-Butane	0.0000	0.0000	0.0000	0.0000	0.0000	0.0000
n-Butane	0.0000	0.0000	0.0000	0.0000	0.0000	0.0000
i-Pentane	0.0000	0.0000	0.0000	0.0000	0.0000	0.0000
n-Pentane	0.0000	0.0000	0.0000	0.0000	0.0000	0.0000
n-Hexane	0.0000	0.0000	0.0000	0.0000	0.0000	0.0000
Nitrogen	0.0008	0.0000	0.0005	0.0000	0.0000	0.0000
CO2	0.0261	0.0003	0.0276	0.0006	0.0014	0.0007
H2S	0.0000	0.0000	0.0000	0.0000	0.0000	0.0000
H2O	103.0021	0.9997	44.5342	0.9994	1.8593	0.9992
NBP[1]95*	0.0000	0.0000	0.0000	0.0000	0.0000	0.0000
NBP[1]121*	0.0000	0.0000	0.0000	0.0000	0.0000	0.0000
NBP[1]147*	0.0000	0.0000	0.0000	0.0000	0.0000	0.0000
NBP[1]171*	0.0000	0.0000	0.0000	0.0000	0.0000	0.0000
NBP[1]195*	0.0000	0.0000	0.0000	0.0000	0.0000	0.0000
NBP[1]222*	0.0000	0.0000	0.0000	0.0000	0.0000	0.0000
NBP[1]248*	0.0000	0.0000	0.0000	0.0000	0.0000	0.0000
NBP[1]273*	0.0000	0.0000	0.0000	0.0000	0.0000	0.0000
NBP[1]299*	0.0000	0.0000	0.0000	0.0000	0.0000	0.0000
NBP[1]325*	0.0000	0.0000	0.0000	0.0000	0.0000	0.0000
NBP[1]351*	0.0000	0.0000	0.0000	0.0000	0.0000	0.0000
NBP[1]377*	0.0000	0.0000	0.0000	0.0000	0.0000	0.0000
NBP[1]402*	0.0000	0.0000	0.0000	0.0000	0.0000	0.0000
NBP[1]428*	0.0000	0.0000	0.0000	0.0000	0.0000	0.0000
NBP[1]454*	0.0000	0.0000	0.0000	0.0000	0.0000	0.0000
NBP[1]480*	0.0000	0.0000	0.0000	0.0000	0.0000	0.0000
NBP[1]505*	0.0000	0.0000	0.0000	0.0000	0.0000	0.0000
NBP[1]531*	0.0000	0.0000	0.0000	0.0000	0.0000	0.0000
NBP[1]557*	0.0000	0.0000	0.0000	0.0000	0.0000	0.0000
NBP[1]582*	0.0000	0.0000	0.0000	0.0000	0.0000	0.0000
NBP[1]608*	0.0000	0.0000	0.0000	0.0000	0.0000	0.0000
NBP[1]634*	0.0000	0.0000	0.0000	0.0000	0.0000	0.0000
NBP[1]659*	0.0000	0.0000	0.0000	0.0000	0.0000	0.0000
NBP[1]685*	0.0000	0.0000	0.0000	0.0000	0.0000	0.0000
NBP[1]711*	0.0000	0.0000	0.0000	0.0000	0.0000	0.0000
NBP[1]736*	0.0000	0.0000	0.0000	0.0000	0.0000	0.0000
NBP[1]762*	0.0000	0.0000	0.0000	0.0000	0.0000	0.0000
NBP[1]788*	0.0000	0.0000	0.0000	0.0000	0.0000	0.0000
NBP[1]825*	0.0000	0.0000	0.0000	0.0000	0.0000	0.0000
NBP[1]873*	0.0000	0.0000	0.0000	0.0000	0.0000	0.0000
NBP[1]926*	0.0000	0.0000	0.0000	0.0000	0.0000	0.0000
NBP[1]978*	0.0000	0.0000	0.0000	0.0000	0.0000	0.0000
NBP[1]1021*	0.0000	0.0000	0.0000	0.0000	0.0000	0.0000
NBP[1]1075*	0.0000	0.0000	0.0000	0.0000	0.0000	0.0000
NBP[1]1123*	0.0000	0.0000	0.0000	0.0000	0.0000	0.0000
NBP[1]1173*	0.0000	0.0000	0.0000	0.0000	0.0000	0.0000
NBP[1]1250*	0.0000	0.0000	0.0000	0.0000	0.0000	0.0000

* Specified by user.

Material Stream: Pandhi-Water- (continued)

Fluid Package: Basis-1
Property Package: Peng-Robinson

COMPOSITION

Overall Phase (continued)

Vapour Fraction 0.0000

COMPONENTS	MOLAR FLOW (kgmole/h)	MOLE FRACTION	MASS FLOW (tonne/d)	MASS FRACTION	LIQUID VOLUME FLOW (m3/h)	LIQUID VOLUME FRACTION
NBP[1]1339*	0.0000	0.0000	0.0000	0.0000	0.0000	0.0000
NBP[1]1432*	0.0000	0.0000	0.0000	0.0000	0.0000	0.0000
NBP[1]1528*	0.0000	0.0000	0.0000	0.0000	0.0000	0.0000
NBP[1]1637*	0.0000	0.0000	0.0000	0.0000	0.0000	0.0000
NBP[1]1732*	0.0000	0.0000	0.0000	0.0000	0.0000	0.0000
NBP[1]1819*	0.0000	0.0000	0.0000	0.0000	0.0000	0.0000
NBP[1]1913*	0.0000	0.0000	0.0000	0.0000	0.0000	0.0000
Total	103.0293	1.0000	44.5625	1.0000	1.8608	1.0000

Vapour Phase

Phase Fraction 0.0000

COMPONENTS	MOLAR FLOW (kgmole/h)	MOLE FRACTION	MASS FLOW (tonne/d)	MASS FRACTION	LIQUID VOLUME FLOW (m3/h)	LIQUID VOLUME FRACTION
Methane	0.0000	0.7393	0.0000	0.5288	0.0000	0.6596
Ethane	0.0000	0.1016	0.0000	0.1363	0.0000	0.1431
Propane	0.0000	0.0527	0.0000	0.1036	0.0000	0.0764
i-Butane	0.0000	0.0068	0.0000	0.0176	0.0000	0.0117
n-Butane	0.0000	0.0130	0.0000	0.0337	0.0000	0.0216
i-Pentane	0.0000	0.0026	0.0000	0.0084	0.0000	0.0050
n-Pentane	0.0000	0.0029	0.0000	0.0092	0.0000	0.0055
n-Hexane	0.0000	0.0037	0.0000	0.0142	0.0000	0.0080
Nitrogen	0.0000	0.0201	0.0000	0.0250	0.0000	0.0116
CO2	0.0000	0.0333	0.0000	0.0654	0.0000	0.0296
H2S	0.0000	0.0000	0.0000	0.0000	0.0000	0.0000
H2O	0.0000	0.0131	0.0000	0.0105	0.0000	0.0039
NBP[1]95*	0.0000	0.0009	0.0000	0.0026	0.0000	0.0014
NBP[1]121*	0.0000	0.0010	0.0000	0.0031	0.0000	0.0017
NBP[1]147*	0.0000	0.0011	0.0000	0.0040	0.0000	0.0021
NBP[1]171*	0.0000	0.0020	0.0000	0.0076	0.0000	0.0040
NBP[1]195*	0.0000	0.0023	0.0000	0.0094	0.0000	0.0049
NBP[1]222*	0.0000	0.0014	0.0000	0.0063	0.0000	0.0032
NBP[1]248*	0.0000	0.0009	0.0000	0.0045	0.0000	0.0023
NBP[1]273*	0.0000	0.0006	0.0000	0.0030	0.0000	0.0015
NBP[1]299*	0.0000	0.0003	0.0000	0.0019	0.0000	0.0009
NBP[1]325*	0.0000	0.0002	0.0000	0.0010	0.0000	0.0005
NBP[1]351*	0.0000	0.0001	0.0000	0.0006	0.0000	0.0003
NBP[1]377*	0.0000	0.0001	0.0000	0.0004	0.0000	0.0002
NBP[1]402*	0.0000	0.0000	0.0000	0.0002	0.0000	0.0001
NBP[1]428*	0.0000	0.0000	0.0000	0.0001	0.0000	0.0001
NBP[1]454*	0.0000	0.0000	0.0000	0.0001	0.0000	0.0000
NBP[1]480*	0.0000	0.0000	0.0000	0.0001	0.0000	0.0000
NBP[1]505*	0.0000	0.0000	0.0000	0.0000	0.0000	0.0000
NBP[1]531*	0.0000	0.0000	0.0000	0.0000	0.0000	0.0000
NBP[1]557*	0.0000	0.0000	0.0000	0.0000	0.0000	0.0000
NBP[1]582*	0.0000	0.0000	0.0000	0.0000	0.0000	0.0000
NBP[1]608*	0.0000	0.0000	0.0000	0.0000	0.0000	0.0000
NBP[1]634*	0.0000	0.0000	0.0000	0.0000	0.0000	0.0000
NBP[1]659*	0.0000	0.0000	0.0000	0.0000	0.0000	0.0000
NBP[1]685*	0.0000	0.0000	0.0000	0.0000	0.0000	0.0000
NBP[1]711*	0.0000	0.0000	0.0000	0.0000	0.0000	0.0000
NBP[1]736*	0.0000	0.0000	0.0000	0.0000	0.0000	0.0000
NBP[1]762*	0.0000	0.0000	0.0000	0.0000	0.0000	0.0000
NBP[1]788*	0.0000	0.0000	0.0000	0.0000	0.0000	0.0000
NBP[1]825*	0.0000	0.0000	0.0000	0.0000	0.0000	0.0000
NBP[1]873*	0.0000	0.0000	0.0000	0.0000	0.0000	0.0000

* Specified by user.

Material Stream: Pandhi-Water- (continued)

Fluid Package: Basis-1
Property Package: Peng-Robinson

COMPOSITION

Vapour Phase (continued)

Phase Fraction 0.0000

COMPONENTS	MOLAR FLOW (kgmole/h)	MOLE FRACTION	MASS FLOW (tonne/d)	MASS FRACTION	LIQUID VOLUME FLOW (m3/h)	LIQUID VOLUME FRACTION
NBP[1]926*	0.0000	0.0000	0.0000	0.0000	0.0000	0.0000
NBP[1]978*	0.0000	0.0000	0.0000	0.0000	0.0000	0.0000
NBP[1]1021*	0.0000	0.0000	0.0000	0.0000	0.0000	0.0000
NBP[1]1075*	0.0000	0.0000	0.0000	0.0000	0.0000	0.0000
NBP[1]1123*	0.0000	0.0000	0.0000	0.0000	0.0000	0.0000
NBP[1]1173*	0.0000	0.0000	0.0000	0.0000	0.0000	0.0000
NBP[1]1250*	0.0000	0.0000	0.0000	0.0000	0.0000	0.0000
NBP[1]1339*	0.0000	0.0000	0.0000	0.0000	0.0000	0.0000
NBP[1]1432*	0.0000	0.0000	0.0000	0.0000	0.0000	0.0000
NBP[1]1528*	0.0000	0.0000	0.0000	0.0000	0.0000	0.0000
NBP[1]1637*	0.0000	0.0000	0.0000	0.0000	0.0000	0.0000
NBP[1]1732*	0.0000	0.0000	0.0000	0.0000	0.0000	0.0000
NBP[1]1819*	0.0000	0.0000	0.0000	0.0000	0.0000	0.0000
NBP[1]1913*	0.0000	0.0000	0.0000	0.0021	0.0000	0.0007
Total	0.0000	1.0000	0.0000	1.0000	0.0000	1.0000

Liquid Phase

Phase Fraction 0.0000

COMPONENTS	MOLAR FLOW (kgmole/h)	MOLE FRACTION	MASS FLOW (tonne/d)	MASS FRACTION	LIQUID VOLUME FLOW (m3/h)	LIQUID VOLUME FRACTION
Methane	0.0000	0.1213	0.0000	0.0118	0.0000	0.0315
Ethane	0.0000	0.0476	0.0000	0.0087	0.0000	0.0195
Propane	0.0000	0.0551	0.0000	0.0147	0.0000	0.0233
i-Butane	0.0000	0.0130	0.0000	0.0046	0.0000	0.0065
n-Butane	0.0000	0.0306	0.0000	0.0108	0.0000	0.0148
i-Pentane	0.0000	0.0113	0.0000	0.0049	0.0000	0.0064
n-Pentane	0.0000	0.0147	0.0000	0.0064	0.0000	0.0082
n-Hexane	0.0000	0.0405	0.0000	0.0211	0.0000	0.0256
Nitrogen	0.0000	0.0017	0.0000	0.0003	0.0000	0.0003
CO2	0.0000	0.0111	0.0000	0.0030	0.0000	0.0029
H2S	0.0000	0.0000	0.0000	0.0000	0.0000	0.0000
H2O	0.0000	0.0047	0.0000	0.0005	0.0000	0.0004
NBP[1]95*	0.0000	0.0044	0.0000	0.0018	0.0000	0.0022
NBP[1]121*	0.0000	0.0067	0.0000	0.0029	0.0000	0.0034
NBP[1]147*	0.0000	0.0108	0.0000	0.0052	0.0000	0.0060
NBP[1]171*	0.0000	0.0256	0.0000	0.0136	0.0000	0.0153
NBP[1]195*	0.0000	0.0410	0.0000	0.0232	0.0000	0.0259
NBP[1]222*	0.0000	0.0377	0.0000	0.0229	0.0000	0.0253
NBP[1]248*	0.0000	0.0371	0.0000	0.0243	0.0000	0.0264
NBP[1]273*	0.0000	0.0343	0.0000	0.0240	0.0000	0.0258
NBP[1]299*	0.0000	0.0298	0.0000	0.0222	0.0000	0.0236
NBP[1]325*	0.0000	0.0234	0.0000	0.0186	0.0000	0.0195
NBP[1]351*	0.0000	0.0202	0.0000	0.0170	0.0000	0.0177
NBP[1]377*	0.0000	0.0192	0.0000	0.0173	0.0000	0.0178
NBP[1]402*	0.0000	0.0181	0.0000	0.0173	0.0000	0.0177
NBP[1]428*	0.0000	0.0175	0.0000	0.0179	0.0000	0.0181
NBP[1]454*	0.0000	0.0177	0.0000	0.0193	0.0000	0.0193
NBP[1]480*	0.0000	0.0180	0.0000	0.0210	0.0000	0.0209
NBP[1]505*	0.0000	0.0175	0.0000	0.0218	0.0000	0.0215
NBP[1]531*	0.0000	0.0170	0.0000	0.0225	0.0000	0.0219
NBP[1]557*	0.0000	0.0164	0.0000	0.0231	0.0000	0.0223
NBP[1]582*	0.0000	0.0157	0.0000	0.0234	0.0000	0.0224
NBP[1]608*	0.0000	0.0151	0.0000	0.0239	0.0000	0.0227
NBP[1]634*	0.0000	0.0148	0.0000	0.0249	0.0000	0.0234
NBP[1]659*	0.0000	0.0146	0.0000	0.0259	0.0000	0.0242

* Specified by user.

Material Stream: Pandhi-Water- (continued)

Fluid Package: Basis-1
Property Package: Peng-Robinson

COMPOSITION

Liquid Phase (continued)

Phase Fraction 0.0000

COMPONENTS	MOLAR FLOW (kgmole/h)	MOLE FRACTION	MASS FLOW (tonne/d)	MASS FRACTION	LIQUID VOLUME FLOW (m3/h)	LIQUID VOLUME FRACTION
NBP[1]685*	0.0000	0.0151	0.0000	0.0283	0.0000	0.0262
NBP[1]711*	0.0000	0.0158	0.0000	0.0311	0.0000	0.0286
NBP[1]736*	0.0000	0.0156	0.0000	0.0322	0.0000	0.0294
NBP[1]762*	0.0000	0.0152	0.0000	0.0329	0.0000	0.0298
NBP[1]788*	0.0000	0.0146	0.0000	0.0334	0.0000	0.0300
NBP[1]825*	0.0000	0.0244	0.0000	0.0601	0.0000	0.0536
NBP[1]873*	0.0000	0.0168	0.0000	0.0449	0.0000	0.0396
NBP[1]926*	0.0000	0.0132	0.0000	0.0381	0.0000	0.0332
NBP[1]978*	0.0000	0.0135	0.0000	0.0429	0.0000	0.0368
NBP[1]1021*	0.0000	0.0067	0.0000	0.0223	0.0000	0.0190
NBP[1]1075*	0.0000	0.0041	0.0000	0.0146	0.0000	0.0123
NBP[1]1123*	0.0000	0.0038	0.0000	0.0145	0.0000	0.0121
NBP[1]1173*	0.0000	0.0028	0.0000	0.0110	0.0000	0.0091
NBP[1]1250*	0.0000	0.0036	0.0000	0.0157	0.0000	0.0128
NBP[1]1339*	0.0000	0.0033	0.0000	0.0162	0.0000	0.0130
NBP[1]1432*	0.0000	0.0024	0.0000	0.0125	0.0000	0.0099
NBP[1]1528*	0.0000	0.0017	0.0000	0.0094	0.0000	0.0074
NBP[1]1637*	0.0000	0.0012	0.0000	0.0071	0.0000	0.0054
NBP[1]1732*	0.0000	0.0009	0.0000	0.0059	0.0000	0.0045
NBP[1]1819*	0.0000	0.0009	0.0000	0.0060	0.0000	0.0045
NBP[1]1913*	0.0000	0.0000	0.0000	0.0000	0.0000	0.0000
Total	0.0000	1.0000	0.0000	1.0000	0.0000	1.0000

Aqueous Phase

Phase Fraction 1.000

COMPONENTS	MOLAR FLOW (kgmole/h)	MOLE FRACTION	MASS FLOW (tonne/d)	MASS FRACTION	LIQUID VOLUME FLOW (m3/h)	LIQUID VOLUME FRACTION
Methane	0.0003	0.0000	0.0001	0.0000	0.0000	0.0000
Ethane	0.0000	0.0000	0.0000	0.0000	0.0000	0.0000
Propane	0.0000	0.0000	0.0000	0.0000	0.0000	0.0000
i-Butane	0.0000	0.0000	0.0000	0.0000	0.0000	0.0000
n-Butane	0.0000	0.0000	0.0000	0.0000	0.0000	0.0000
i-Pentane	0.0000	0.0000	0.0000	0.0000	0.0000	0.0000
n-Pentane	0.0000	0.0000	0.0000	0.0000	0.0000	0.0000
n-Hexane	0.0000	0.0000	0.0000	0.0000	0.0000	0.0000
Nitrogen	0.0008	0.0000	0.0005	0.0000	0.0000	0.0000
CO2	0.0261	0.0003	0.0276	0.0006	0.0014	0.0007
H2S	0.0000	0.0000	0.0000	0.0000	0.0000	0.0000
H2O	103.0021	0.9997	44.5342	0.9994	1.8593	0.9992
NBP[1]95*	0.0000	0.0000	0.0000	0.0000	0.0000	0.0000
NBP[1]121*	0.0000	0.0000	0.0000	0.0000	0.0000	0.0000
NBP[1]147*	0.0000	0.0000	0.0000	0.0000	0.0000	0.0000
NBP[1]171*	0.0000	0.0000	0.0000	0.0000	0.0000	0.0000
NBP[1]195*	0.0000	0.0000	0.0000	0.0000	0.0000	0.0000
NBP[1]222*	0.0000	0.0000	0.0000	0.0000	0.0000	0.0000
NBP[1]248*	0.0000	0.0000	0.0000	0.0000	0.0000	0.0000
NBP[1]273*	0.0000	0.0000	0.0000	0.0000	0.0000	0.0000
NBP[1]299*	0.0000	0.0000	0.0000	0.0000	0.0000	0.0000
NBP[1]325*	0.0000	0.0000	0.0000	0.0000	0.0000	0.0000
NBP[1]351*	0.0000	0.0000	0.0000	0.0000	0.0000	0.0000
NBP[1]377*	0.0000	0.0000	0.0000	0.0000	0.0000	0.0000
NBP[1]402*	0.0000	0.0000	0.0000	0.0000	0.0000	0.0000
NBP[1]428*	0.0000	0.0000	0.0000	0.0000	0.0000	0.0000
NBP[1]454*	0.0000	0.0000	0.0000	0.0000	0.0000	0.0000
NBP[1]480*	0.0000	0.0000	0.0000	0.0000	0.0000	0.0000

* Specified by user.

Material Stream: Pandhi-Water- (continued)

Fluid Package: Basis-1
Property Package: Peng-Robinson

COMPOSITION

Aqueous Phase (continued)

Phase Fraction 1.000

COMPONENTS	MOLAR FLOW (kgmole/h)	MOLE FRACTION	MASS FLOW (tonne/d)	MASS FRACTION	LIQUID VOLUME FLOW (m3/h)	LIQUID VOLUME FRACTION
NBP[1]505*	0.0000	0.0000	0.0000	0.0000	0.0000	0.0000
NBP[1]531*	0.0000	0.0000	0.0000	0.0000	0.0000	0.0000
NBP[1]557*	0.0000	0.0000	0.0000	0.0000	0.0000	0.0000
NBP[1]582*	0.0000	0.0000	0.0000	0.0000	0.0000	0.0000
NBP[1]608*	0.0000	0.0000	0.0000	0.0000	0.0000	0.0000
NBP[1]634*	0.0000	0.0000	0.0000	0.0000	0.0000	0.0000
NBP[1]659*	0.0000	0.0000	0.0000	0.0000	0.0000	0.0000
NBP[1]685*	0.0000	0.0000	0.0000	0.0000	0.0000	0.0000
NBP[1]711*	0.0000	0.0000	0.0000	0.0000	0.0000	0.0000
NBP[1]736*	0.0000	0.0000	0.0000	0.0000	0.0000	0.0000
NBP[1]762*	0.0000	0.0000	0.0000	0.0000	0.0000	0.0000
NBP[1]788*	0.0000	0.0000	0.0000	0.0000	0.0000	0.0000
NBP[1]825*	0.0000	0.0000	0.0000	0.0000	0.0000	0.0000
NBP[1]873*	0.0000	0.0000	0.0000	0.0000	0.0000	0.0000
NBP[1]926*	0.0000	0.0000	0.0000	0.0000	0.0000	0.0000
NBP[1]978*	0.0000	0.0000	0.0000	0.0000	0.0000	0.0000
NBP[1]1021*	0.0000	0.0000	0.0000	0.0000	0.0000	0.0000
NBP[1]1075*	0.0000	0.0000	0.0000	0.0000	0.0000	0.0000
NBP[1]1123*	0.0000	0.0000	0.0000	0.0000	0.0000	0.0000
NBP[1]1173*	0.0000	0.0000	0.0000	0.0000	0.0000	0.0000
NBP[1]1250*	0.0000	0.0000	0.0000	0.0000	0.0000	0.0000
NBP[1]1339*	0.0000	0.0000	0.0000	0.0000	0.0000	0.0000
NBP[1]1432*	0.0000	0.0000	0.0000	0.0000	0.0000	0.0000
NBP[1]1528*	0.0000	0.0000	0.0000	0.0000	0.0000	0.0000
NBP[1]1637*	0.0000	0.0000	0.0000	0.0000	0.0000	0.0000
NBP[1]1732*	0.0000	0.0000	0.0000	0.0000	0.0000	0.0000
NBP[1]1819*	0.0000	0.0000	0.0000	0.0000	0.0000	0.0000
NBP[1]1913*	0.0000	0.0000	0.0000	0.0000	0.0000	0.0000
Total	103.0293	1.0000	44.5625	1.0000	1.8608	1.0000

Material Stream: permeate

Fluid Package: Basis-1
Property Package: Peng-Robinson

CONDITIONS

		Overall	Vapour Phase
Vapour / Phase Fraction		1.0000	1.0000
Temperature:	(F)	100.0 *	100.0
Pressure:	(psig)	20.00 *	20.00
Molar Flow	(MMSCFD)	2.810 *	2.810
Mass Flow	(tonne/d)	76.19	76.19
Std Ideal Liq Vol Flow	(barrel/day)	1140	1140
Molar Enthalpy	(kJ/kgmole)	-1.319e+005	-1.319e+005
Molar Entropy	(kJ/kgmole-C)	181.4	181.4
Heat Flow	(MMBtu/hr)	-17.50	-17.50
Liq Vol Flow @Std Cond	(barrel/day)	4.980e+005 *	4.980e+005

PROPERTIES

		Overall	Vapour Phase
Molecular Weight		22.68	22.68
Molar Density	(kgmole/m3)	9.306e-002	9.306e-002
Mass Density	(kg/m3)	2.111	2.111
Act. Volume Flow	(barrel/day)	2.270e+005	2.270e+005
Mass Enthalpy	(kJ/kg)	-5817	-5817
Mass Entropy	(kJ/kg-C)	7.998	7.998

* Specified by user.

Material Stream: permeate (continued)

Fluid Package: Basis-1
Property Package: Peng-Robinson

PROPERTIES

		Overall	Vapour Phase			
Heat Capacity	(kJ/kgmole-C)	37.74	37.74			
Mass Heat Capacity	(kJ/kg-C)	1.664	1.664			
LHV Molar Basis (Std)	(Btu/SCF)	727.1	727.1			
LHV Mass Basis (Std)	(kJ/kg)	2.829e+004	2.829e+004			
Phase Fraction [Vol. Basis]		1.000	1.000			
Phase Fraction [Mass Basis]		1.000	1.000			
Partial Pressure of CO2	(psig)	-8.100	---			
Cost Based on Flow	(Cost/s)	0.0000	0.0000			
Act. Gas Flow	(ACT_m3/h)	1504	1504			
Avg. Liq. Density	(kgmole/m3)	18.53	18.53			
Specific Heat	(kJ/kgmole-C)	37.74	37.74			
Std. Gas Flow	(STD_m3/h)	3309	3309			
Std. Ideal Liq. Mass Density	(kg/m3)	420.3	420.3			
Act. Liq. Flow	(barrel/day)	---	---			
Z Factor		0.9944	0.9944			
Watson K		14.59	14.59			
User Property		---	---			
Partial Pressure of H2S	(psig)	-14.70	---			
Cp/(Cp - R)		1.283	1.283			
Cp/Cv		1.292	1.292			
Heat of Vap.	(kJ/kgmole)	1.372e+004	---			
Kinematic Viscosity	(cSt)	5.993	5.993			
Liq. Mass Density (Std. Cond)	(kg/m3)	0.9622	0.9622			
Liq. Vol. Flow (Std. Cond)	(barrel/day)	4.980e+005	4.980e+005			
Liquid Fraction		0.0000	0.0000			
Molar Volume	(m3/kgmole)	10.75	10.75			
Mass Heat of Vap.	(kJ/kg)	604.9	---			
Phase Fraction [Molar Basis]		1.0000	1.0000			
Surface Tension	(dyne/cm)	---	---			
Thermal Conductivity	(W/m-K)	3.032e-002	3.032e-002			
Viscosity	(cP)	1.265e-002	1.265e-002			
Cv (Semi-Ideal)	(kJ/kgmole-C)	29.43	29.43			
Mass Cv (Semi-Ideal)	(kJ/kg-C)	1.297	1.297			
Cv	(kJ/kgmole-C)	29.20	29.20			
Mass Cv	(kJ/kg-C)	1.288	1.288			
Cv (Ent. Method)	(kJ/kgmole-C)	---	---			
Mass Cv (Ent. Method)	(kJ/kg-C)	---	---			
Cp/Cv (Ent. Method)		---	---			
Reid VP at 37.8 C	(psig)	---	---			
True VP at 37.8 C	(psig)	---	---			
Liq. Vol. Flow - Sum(Std. Cond)	(barrel/day)	4.980e+005	4.980e+005			
HHV Molar Basis (Std)	(Btu/SCF)	800.0	800.0			
HHV Mass Basis (Std)	(kJ/kg)	3.113e+004	3.113e+004			
CO2 Loading		---	---			
CO2 App ML Con	(kgmole/m3)	---	---			
CO2 App WT Con	(kgmol/kg)	---	---			
Phase Fraction [Act. Vol. Basis]		1.000	1.000			
Mass Exergy	(kJ/kg)	93.92	---			
Viscosity Index		-9.135	---			
Ideal Gas Cp/Cv		1.285	1.285			
Ideal Gas Cp	(kJ/kgmole-C)	37.49	37.49			
Mass Ideal Gas Cp	(kJ/kg-C)	1.653	1.653			
Bubble Point Pressure	(psig)	---	---			

* Specified by user.

Material Stream: permeate (continued)

Fluid Package: Basis-1
Property Package: Peng-Robinson

COMPOSITION

Overall Phase

Vapour Fraction 1.0000

COMPONENTS	MOLAR FLOW (kgmole/h)	MOLE FRACTION	MASS FLOW (tonne/d)	MASS FRACTION	LIQUID VOLUME FLOW (m3/h)	LIQUID VOLUME FRACTION
Methane	100.4480 *	0.7177 *	38.6754 *	0.5076 *	5.3825 *	0.7126 *
Ethane	5.2335 *	0.0374 *	3.7769 *	0.0496 *	0.4424 *	0.0586 *
Propane	0.3663 *	0.0026 *	0.3877 *	0.0051 *	0.0319 *	0.0042 *
i-Butane	0.0209 *	0.0001 *	0.0292 *	0.0004 *	0.0022 *	0.0003 *
n-Butane	0.0209 *	0.0001 *	0.0292 *	0.0004 *	0.0021 *	0.0003 *
i-Pentane	0.0105 *	0.0001 *	0.0181 *	0.0002 *	0.0012 *	0.0002 *
n-Pentane	0.0000 *	0.0000 *	0.0000 *	0.0000 *	0.0000 *	0.0000 *
n-Hexane	0.2093 *	0.0015 *	0.4330 *	0.0057 *	0.0272 *	0.0036 *
Nitrogen	7.0412 *	0.0503 *	4.7339 *	0.0621 *	0.2446 *	0.0324 *
CO2	26.6072 *	0.1901 *	28.1034 *	0.3689 *	1.4188 *	0.1878 *
H2S	0.0000 *	0.0000 *	0.0000 *	0.0000 *	0.0000 *	0.0000 *
H2O	0.0000 *	0.0000 *	0.0000 *	0.0000 *	0.0000 *	0.0000 *
NBP[1]95*	0.0000 *	0.0000 *	0.0000 *	0.0000 *	0.0000 *	0.0000 *
NBP[1]121*	0.0000 *	0.0000 *	0.0000 *	0.0000 *	0.0000 *	0.0000 *
NBP[1]147*	0.0000 *	0.0000 *	0.0000 *	0.0000 *	0.0000 *	0.0000 *
NBP[1]171*	0.0000 *	0.0000 *	0.0000 *	0.0000 *	0.0000 *	0.0000 *
NBP[1]195*	0.0000 *	0.0000 *	0.0000 *	0.0000 *	0.0000 *	0.0000 *
NBP[1]222*	0.0000 *	0.0000 *	0.0000 *	0.0000 *	0.0000 *	0.0000 *
NBP[1]248*	0.0000 *	0.0000 *	0.0000 *	0.0000 *	0.0000 *	0.0000 *
NBP[1]273*	0.0000 *	0.0000 *	0.0000 *	0.0000 *	0.0000 *	0.0000 *
NBP[1]299*	0.0000 *	0.0000 *	0.0000 *	0.0000 *	0.0000 *	0.0000 *
NBP[1]325*	0.0000 *	0.0000 *	0.0000 *	0.0000 *	0.0000 *	0.0000 *
NBP[1]351*	0.0000 *	0.0000 *	0.0000 *	0.0000 *	0.0000 *	0.0000 *
NBP[1]377*	0.0000 *	0.0000 *	0.0000 *	0.0000 *	0.0000 *	0.0000 *
NBP[1]402*	0.0000 *	0.0000 *	0.0000 *	0.0000 *	0.0000 *	0.0000 *
NBP[1]428*	0.0000 *	0.0000 *	0.0000 *	0.0000 *	0.0000 *	0.0000 *
NBP[1]454*	0.0000 *	0.0000 *	0.0000 *	0.0000 *	0.0000 *	0.0000 *
NBP[1]480*	0.0000 *	0.0000 *	0.0000 *	0.0000 *	0.0000 *	0.0000 *
NBP[1]505*	0.0000 *	0.0000 *	0.0000 *	0.0000 *	0.0000 *	0.0000 *
NBP[1]531*	0.0000 *	0.0000 *	0.0000 *	0.0000 *	0.0000 *	0.0000 *
NBP[1]557*	0.0000 *	0.0000 *	0.0000 *	0.0000 *	0.0000 *	0.0000 *
NBP[1]582*	0.0000 *	0.0000 *	0.0000 *	0.0000 *	0.0000 *	0.0000 *
NBP[1]608*	0.0000 *	0.0000 *	0.0000 *	0.0000 *	0.0000 *	0.0000 *
NBP[1]634*	0.0000 *	0.0000 *	0.0000 *	0.0000 *	0.0000 *	0.0000 *
NBP[1]659*	0.0000 *	0.0000 *	0.0000 *	0.0000 *	0.0000 *	0.0000 *
NBP[1]685*	0.0000 *	0.0000 *	0.0000 *	0.0000 *	0.0000 *	0.0000 *
NBP[1]711*	0.0000 *	0.0000 *	0.0000 *	0.0000 *	0.0000 *	0.0000 *
NBP[1]736*	0.0000 *	0.0000 *	0.0000 *	0.0000 *	0.0000 *	0.0000 *
NBP[1]762*	0.0000 *	0.0000 *	0.0000 *	0.0000 *	0.0000 *	0.0000 *
NBP[1]788*	0.0000 *	0.0000 *	0.0000 *	0.0000 *	0.0000 *	0.0000 *
NBP[1]825*	0.0000 *	0.0000 *	0.0000 *	0.0000 *	0.0000 *	0.0000 *
NBP[1]873*	0.0000 *	0.0000 *	0.0000 *	0.0000 *	0.0000 *	0.0000 *
NBP[1]926*	0.0000 *	0.0000 *	0.0000 *	0.0000 *	0.0000 *	0.0000 *
NBP[1]978*	0.0000 *	0.0000 *	0.0000 *	0.0000 *	0.0000 *	0.0000 *
NBP[1]1021*	0.0000 *	0.0000 *	0.0000 *	0.0000 *	0.0000 *	0.0000 *
NBP[1]1075*	0.0000 *	0.0000 *	0.0000 *	0.0000 *	0.0000 *	0.0000 *
NBP[1]1123*	0.0000 *	0.0000 *	0.0000 *	0.0000 *	0.0000 *	0.0000 *
NBP[1]1173*	0.0000 *	0.0000 *	0.0000 *	0.0000 *	0.0000 *	0.0000 *
NBP[1]1250*	0.0000 *	0.0000 *	0.0000 *	0.0000 *	0.0000 *	0.0000 *
NBP[1]1339*	0.0000 *	0.0000 *	0.0000 *	0.0000 *	0.0000 *	0.0000 *
NBP[1]1432*	0.0000 *	0.0000 *	0.0000 *	0.0000 *	0.0000 *	0.0000 *
NBP[1]1528*	0.0000 *	0.0000 *	0.0000 *	0.0000 *	0.0000 *	0.0000 *
NBP[1]1637*	0.0000 *	0.0000 *	0.0000 *	0.0000 *	0.0000 *	0.0000 *
NBP[1]1732*	0.0000 *	0.0000 *	0.0000 *	0.0000 *	0.0000 *	0.0000 *

Licensed to: PETROCHEMICAL ENGINEERIN
* Specified by user.

Material Stream: permeate (continued)

Fluid Package: Basis-1
Property Package: Peng-Robinson

COMPOSITION

Overall Phase (continued)

Vapour Fraction 1.0000

COMPONENTS	MOLAR FLOW (kgmole/h)	MOLE FRACTION	MASS FLOW (tonne/d)	MASS FRACTION	LIQUID VOLUME FLOW (m3/h)	LIQUID VOLUME FRACTION
NBP[1]1819*	0.0000 *	0.0000 *	0.0000 *	0.0000 *	0.0000 *	0.0000 *
NBP[1]1913*	0.0000 *	0.0000 *	0.0000 *	0.0000 *	0.0000 *	0.0000 *
Total	139.9579	1.0000	76.1868	1.0000	7.5529	1.0000

Vapour Phase

Phase Fraction 1.000

COMPONENTS	MOLAR FLOW (kgmole/h)	MOLE FRACTION	MASS FLOW (tonne/d)	MASS FRACTION	LIQUID VOLUME FLOW (m3/h)	LIQUID VOLUME FRACTION
Methane	100.4480	0.7177	38.6754	0.5076	5.3825	0.7126
Ethane	5.2335	0.0374	3.7769	0.0496	0.4424	0.0586
Propane	0.3663	0.0026	0.3877	0.0051	0.0319	0.0042
i-Butane	0.0209	0.0001	0.0292	0.0004	0.0022	0.0003
n-Butane	0.0209	0.0001	0.0292	0.0004	0.0021	0.0003
i-Pentane	0.0105	0.0001	0.0181	0.0002	0.0012	0.0002
n-Pentane	0.0000	0.0000	0.0000	0.0000	0.0000	0.0000
n-Hexane	0.2093	0.0015	0.4330	0.0057	0.0272	0.0036
Nitrogen	7.0412	0.0503	4.7339	0.0621	0.2446	0.0324
CO2	26.6072	0.1901	28.1034	0.3689	1.4188	0.1878
H2S	0.0000	0.0000	0.0000	0.0000	0.0000	0.0000
H2O	0.0000	0.0000	0.0000	0.0000	0.0000	0.0000
NBP[1]95*	0.0000	0.0000	0.0000	0.0000	0.0000	0.0000
NBP[1]121*	0.0000	0.0000	0.0000	0.0000	0.0000	0.0000
NBP[1]147*	0.0000	0.0000	0.0000	0.0000	0.0000	0.0000
NBP[1]171*	0.0000	0.0000	0.0000	0.0000	0.0000	0.0000
NBP[1]195*	0.0000	0.0000	0.0000	0.0000	0.0000	0.0000
NBP[1]222*	0.0000	0.0000	0.0000	0.0000	0.0000	0.0000
NBP[1]248*	0.0000	0.0000	0.0000	0.0000	0.0000	0.0000
NBP[1]273*	0.0000	0.0000	0.0000	0.0000	0.0000	0.0000
NBP[1]299*	0.0000	0.0000	0.0000	0.0000	0.0000	0.0000
NBP[1]325*	0.0000	0.0000	0.0000	0.0000	0.0000	0.0000
NBP[1]351*	0.0000	0.0000	0.0000	0.0000	0.0000	0.0000
NBP[1]377*	0.0000	0.0000	0.0000	0.0000	0.0000	0.0000
NBP[1]402*	0.0000	0.0000	0.0000	0.0000	0.0000	0.0000
NBP[1]428*	0.0000	0.0000	0.0000	0.0000	0.0000	0.0000
NBP[1]454*	0.0000	0.0000	0.0000	0.0000	0.0000	0.0000
NBP[1]480*	0.0000	0.0000	0.0000	0.0000	0.0000	0.0000
NBP[1]505*	0.0000	0.0000	0.0000	0.0000	0.0000	0.0000
NBP[1]531*	0.0000	0.0000	0.0000	0.0000	0.0000	0.0000
NBP[1]557*	0.0000	0.0000	0.0000	0.0000	0.0000	0.0000
NBP[1]582*	0.0000	0.0000	0.0000	0.0000	0.0000	0.0000
NBP[1]608*	0.0000	0.0000	0.0000	0.0000	0.0000	0.0000
NBP[1]634*	0.0000	0.0000	0.0000	0.0000	0.0000	0.0000
NBP[1]659*	0.0000	0.0000	0.0000	0.0000	0.0000	0.0000
NBP[1]685*	0.0000	0.0000	0.0000	0.0000	0.0000	0.0000
NBP[1]711*	0.0000	0.0000	0.0000	0.0000	0.0000	0.0000
NBP[1]736*	0.0000	0.0000	0.0000	0.0000	0.0000	0.0000
NBP[1]762*	0.0000	0.0000	0.0000	0.0000	0.0000	0.0000
NBP[1]788*	0.0000	0.0000	0.0000	0.0000	0.0000	0.0000
NBP[1]825*	0.0000	0.0000	0.0000	0.0000	0.0000	0.0000
NBP[1]873*	0.0000	0.0000	0.0000	0.0000	0.0000	0.0000
NBP[1]926*	0.0000	0.0000	0.0000	0.0000	0.0000	0.0000
NBP[1]978*	0.0000	0.0000	0.0000	0.0000	0.0000	0.0000
NBP[1]1021*	0.0000	0.0000	0.0000	0.0000	0.0000	0.0000
NBP[1]1075*	0.0000	0.0000	0.0000	0.0000	0.0000	0.0000
NBP[1]1123*	0.0000	0.0000	0.0000	0.0000	0.0000	0.0000

* Specified by user.

Material Stream: permeate (continued)

Fluid Package: Basis-1
Property Package: Peng-Robinson

COMPOSITION

Vapour Phase (continued)

Phase Fraction 1.000

COMPONENTS	MOLAR FLOW (kgmole/h)	MOLE FRACTION	MASS FLOW (tonne/d)	MASS FRACTION	LIQUID VOLUME FLOW (m3/h)	LIQUID VOLUME FRACTION
NBP[1]1173*	0.0000	0.0000	0.0000	0.0000	0.0000	0.0000
NBP[1]1250*	0.0000	0.0000	0.0000	0.0000	0.0000	0.0000
NBP[1]1339*	0.0000	0.0000	0.0000	0.0000	0.0000	0.0000
NBP[1]1432*	0.0000	0.0000	0.0000	0.0000	0.0000	0.0000
NBP[1]1528*	0.0000	0.0000	0.0000	0.0000	0.0000	0.0000
NBP[1]1637*	0.0000	0.0000	0.0000	0.0000	0.0000	0.0000
NBP[1]1732*	0.0000	0.0000	0.0000	0.0000	0.0000	0.0000
NBP[1]1819*	0.0000	0.0000	0.0000	0.0000	0.0000	0.0000
NBP[1]1913*	0.0000	0.0000	0.0000	0.0000	0.0000	0.0000
Total	139.9579	1.0000	76.1868	1.0000	7.5529	1.0000

Material Stream: sep gas

Fluid Package: Basis-1
Property Package: Peng-Robinson

CONDITIONS

		Overall	Vapour Phase	Liquid Phase	Aqueous Phase
Vapour / Phase Fraction		0.9999	0.9999	0.0001	0.0000
Temperature:	(F)	179.9	179.9	179.9	179.9
Pressure:	(psig)	640.0	640.0	640.0	640.0
Molar Flow	(MMSCFD)	5.587	5.586	3.513e-004	0.0000
Mass Flow	(tonne/d)	149.8	149.5	0.3206	0.0000
Std Ideal Liq Vol Flow	(barrel/day)	2523	2521	1.901	0.0000
Molar Enthalpy	(kJ/kgmole)	-9.014e+004	-9.005e+004	-1.575e+006	-2.817e+005
Molar Entropy	(kJ/kgmole-C)	164.1	164.0	2010	67.33
Heat Flow	(MMBtu/hr)	-23.77	-23.75	-2.612e-002	0.0000
Liq Vol Flow @Std Cond	(barrel/day)	9.888e+005 *	9.888e+005	2.004	0.0000

PROPERTIES

		Overall	Vapour Phase	Liquid Phase	Aqueous Phase
Molecular Weight		22.43	22.38	763.6	18.02
Molar Density	(kgmole/m3)	1.681	1.681	1.266	45.21
Mass Density	(kg/m3)	37.71	37.63	966.5	814.8
Act. Volume Flow	(barrel/day)	2.498e+004	2.498e+004	2.087	0.0000
Mass Enthalpy	(kJ/kg)	-4019	-4023	-2063	-1.563e+004
Mass Entropy	(kJ/kg-C)	7.316	7.326	2.632	3.736
Heat Capacity	(kJ/kgmole-C)	52.35	52.25	1628	78.40
Mass Heat Capacity	(kJ/kg-C)	2.334	2.334	2.132	4.350
LHV Molar Basis (Std)	(Btu/SCF)	---	---	---	2.875e-003
LHV Mass Basis (Std)	(kJ/kg)	---	---	---	0.1408
Phase Fraction [Vol. Basis]		0.9992	0.9992	7.535e-004	---
Phase Fraction [Mass Basis]		0.9979	0.9979	2.141e-003	0.0000
Partial Pressure of CO2	(psig)	7.111	---	---	---
Cost Based on Flow	(Cost/s)	0.0000	0.0000	0.0000	0.0000
Act. Gas Flow	(ACT_m3/h)	165.5	165.5	---	---
Avg. Liq. Density	(kgmole/m3)	16.65	16.66	1.389	55.37
Specific Heat	(kJ/kgmole-C)	52.35	52.25	1628	78.40
Std. Gas Flow	(STD_m3/h)	6579	6579	0.4137	0.0000
Std. Ideal Liq. Mass Density	(kg/m3)	373.4	372.9	1061	997.8
Act. Liq. Flow	(barrel/day)	2.087	---	2.087	0.0000
Z Factor		---	0.9088	1.207	3.379e-002
Watson K		16.94	16.96	11.75	8.532
User Property		---	---	---	---
Partial Pressure of H2S	(psig)	-14.69	---	---	---
Cp/(Cp - R)		1.189	1.189	1.005	1.119

* Specified by user.

Material Stream: sep gas (continued)

Fluid Package: Basis-1
Property Package: Peng-Robinson

PROPERTIES

	Overall	Vapour Phase	Liquid Phase	Aqueous Phase
Cp/Cv	1.335	1.336	1.005	1.169
Heat of Vap. (kJ/kgmole)	4.230e+004	---	---	---
Kinematic Viscosity (cSt)	---	0.3797	479.0	0.4193
Liq. Mass Density (Std. Cond) (kg/m3)	0.9528	0.9508	1006	1015
Liq. Vol. Flow (Std. Cond) (barrel/day)	9.888e+005	9.888e+005	2.004	0.0000
Liquid Fraction	6.288e-005	0.0000	1.000	1.000
Molar Volume (m3/kgmole)	0.5948	0.5948	0.7900	2.212e-002
Mass Heat of Vap. (kJ/kg)	1886	---	---	---
Phase Fraction [Molar Basis]	0.9999	0.9999	0.0001	0.0000
Surface Tension (dyne/cm)	15.34	---	15.34	61.92
Thermal Conductivity (W/m-K)	---	4.027e-002	0.1183	0.6712
Viscosity (cP)	---	1.429e-002	463.0	0.3417
Cv (Semi-Ideal) (kJ/kgmole-C)	44.04	43.94	1620	70.09
Mass Cv (Semi-Ideal) (kJ/kg-C)	1.963	1.963	2.121	3.889
Cv (kJ/kgmole-C)	39.20	39.10	1620	67.08
Mass Cv (kJ/kg-C)	1.748	1.747	2.121	3.722
Cv (Ent. Method) (kJ/kgmole-C)	---	---	---	---
Mass Cv (Ent. Method) (kJ/kg-C)	---	---	---	---
Cp/Cv (Ent. Method)	---	---	---	---
Reid VP at 37.8 C (psig)	---	---	22.26	---
True VP at 37.8 C (psig)	5017	---	561.0	8709
Liq. Vol. Flow - Sum(Std. Cond) (barrel/day)	9.888e+005	9.888e+005	2.004	0.0000
HHV Molar Basis (Std) (Btu/SCF)	---	---	---	46.45
HHV Mass Basis (Std) (kJ/kg)	---	---	---	2275
CO2 Loading	---	---	---	---
CO2 App ML Con (kgmole/m3)	---	---	1.966e-002	---
CO2 App WT Con (kgmol/kg)	---	---	2.034e-005	---
Phase Fraction [Act. Vol. Basis]	0.9999	0.9999	8.352e-005	0.0000
Mass Exergy (kJ/kg)	412.1	---	---	---
Viscosity Index	-49.21	---	---	---
Ideal Gas Cp/Cv	1.216	1.216	1.006	1.324
Ideal Gas Cp (kJ/kgmole-C)	46.86	46.77	1389	33.95
Mass Ideal Gas Cp (kJ/kg-C)	2.089	2.090	1.820	1.884
Bubble Point Pressure (psig)	1.000e+004	---	---	---

COMPOSITION

Overall Phase

Vapour Fraction 0.9999

COMPONENTS	MOLAR FLOW (kgmole/h)	MOLE FRACTION	MASS FLOW (tonne/d)	MASS FRACTION	LIQUID VOLUME FLOW (m3/h)	LIQUID VOLUME FRACTION
Methane	205.7238	0.7393	79.2097	0.5288	11.0236	0.6596
Ethane	28.2824	0.1016	20.4108	0.1363	2.3910	0.1431
Propane	14.6680	0.0527	15.5235	0.1036	1.2766	0.0764
i-Butane	1.8871	0.0068	2.6324	0.0176	0.1952	0.0117
n-Butane	3.6182	0.0130	5.0474	0.0337	0.3606	0.0216
i-Pentane	0.7262	0.0026	1.2576	0.0084	0.0840	0.0050
n-Pentane	0.8000	0.0029	1.3854	0.0092	0.0917	0.0055
n-Hexane	1.0289	0.0037	2.1280	0.0142	0.1338	0.0080
Nitrogen	5.5794	0.0201	3.7511	0.0250	0.1938	0.0116
CO2	9.2682	0.0333	9.7894	0.0654	0.4942	0.0296
H2S	0.0006	0.0000	0.0005	0.0000	0.0000	0.0000
H2O	3.6458	0.0131	1.5763	0.0105	0.0658	0.0039
NBP[1]95*	0.2399	0.0009	0.3911	0.0026	0.0240	0.0014
NBP[1]121*	0.2658	0.0010	0.4647	0.0031	0.0281	0.0017
NBP[1]147*	0.3137	0.0011	0.6038	0.0040	0.0359	0.0021
NBP[1]171*	0.5434	0.0020	1.1434	0.0076	0.0669	0.0040
NBP[1]195*	0.6294	0.0023	1.4135	0.0094	0.0818	0.0049

* Specified by user.

Material Stream: sep gas (continued)

Fluid Package: Basis-1
Property Package: Peng-Robinson

COMPOSITION

Overall Phase (continued)

Vapour Fraction 0.9999

COMPONENTS	MOLAR FLOW (kgmole/h)	MOLE FRACTION	MASS FLOW (tonne/d)	MASS FRACTION	LIQUID VOLUME FLOW (m3/h)	LIQUID VOLUME FRACTION
NBP[1]222*	0.3900	0.0014	0.9419	0.0063	0.0538	0.0032
NBP[1]248*	0.2614	0.0009	0.6790	0.0045	0.0383	0.0023
NBP[1]273*	0.1627	0.0006	0.4519	0.0030	0.0252	0.0015
NBP[1]299*	0.0942	0.0003	0.2790	0.0019	0.0154	0.0009
NBP[1]325*	0.0480	0.0002	0.1510	0.0010	0.0083	0.0005
NBP[1]351*	0.0263	0.0001	0.0881	0.0006	0.0048	0.0003
NBP[1]377*	0.0156	0.0001	0.0556	0.0004	0.0030	0.0002
NBP[1]402*	0.0091	0.0000	0.0345	0.0002	0.0018	0.0001
NBP[1]428*	0.0053	0.0000	0.0215	0.0001	0.0011	0.0001
NBP[1]454*	0.0032	0.0000	0.0137	0.0001	0.0007	0.0000
NBP[1]480*	0.0019	0.0000	0.0087	0.0001	0.0004	0.0000
NBP[1]505*	0.0011	0.0000	0.0052	0.0000	0.0003	0.0000
NBP[1]531*	0.0006	0.0000	0.0030	0.0000	0.0002	0.0000
NBP[1]557*	0.0003	0.0000	0.0017	0.0000	0.0001	0.0000
NBP[1]582*	0.0002	0.0000	0.0009	0.0000	0.0000	0.0000
NBP[1]608*	0.0001	0.0000	0.0005	0.0000	0.0000	0.0000
NBP[1]634*	0.0000	0.0000	0.0003	0.0000	0.0000	0.0000
NBP[1]659*	0.0000	0.0000	0.0001	0.0000	0.0000	0.0000
NBP[1]685*	0.0000	0.0000	0.0001	0.0000	0.0000	0.0000
NBP[1]711*	0.0000	0.0000	0.0000	0.0000	0.0000	0.0000
NBP[1]736*	0.0000	0.0000	0.0000	0.0000	0.0000	0.0000
NBP[1]762*	0.0000	0.0000	0.0000	0.0000	0.0000	0.0000
NBP[1]788*	0.0000	0.0000	0.0000	0.0000	0.0000	0.0000
NBP[1]825*	0.0000	0.0000	0.0000	0.0000	0.0000	0.0000
NBP[1]873*	0.0000	0.0000	0.0000	0.0000	0.0000	0.0000
NBP[1]926*	0.0000	0.0000	0.0000	0.0000	0.0000	0.0000
NBP[1]978*	0.0000	0.0000	0.0000	0.0000	0.0000	0.0000
NBP[1]1021*	0.0000	0.0000	0.0000	0.0000	0.0000	0.0000
NBP[1]1075*	0.0000	0.0000	0.0000	0.0000	0.0000	0.0000
NBP[1]1123*	0.0000	0.0000	0.0000	0.0000	0.0000	0.0000
NBP[1]1173*	0.0000	0.0000	0.0000	0.0000	0.0000	0.0000
NBP[1]1250*	0.0000	0.0000	0.0000	0.0000	0.0000	0.0000
NBP[1]1339*	0.0000	0.0000	0.0000	0.0000	0.0000	0.0000
NBP[1]1432*	0.0000	0.0000	0.0000	0.0000	0.0000	0.0000
NBP[1]1528*	0.0000	0.0000	0.0000	0.0000	0.0000	0.0000
NBP[1]1637*	0.0000	0.0000	0.0000	0.0000	0.0000	0.0000
NBP[1]1732*	0.0000	0.0000	0.0000	0.0000	0.0000	0.0000
NBP[1]1819*	0.0000	0.0000	0.0001	0.0000	0.0000	0.0000
NBP[1]1913*	0.0112	0.0000	0.3147	0.0021	0.0121	0.0007
Total	278.2518	1.0000	149.7799	1.0000	16.7127	1.0000

Vapour Phase

Phase Fraction 0.9999

COMPONENTS	MOLAR FLOW (kgmole/h)	MOLE FRACTION	MASS FLOW (tonne/d)	MASS FRACTION	LIQUID VOLUME FLOW (m3/h)	LIQUID VOLUME FRACTION
Methane	205.7206	0.7394	79.2085	0.5300	11.0234	0.6601
Ethane	28.2817	0.1016	20.4102	0.1366	2.3910	0.1432
Propane	14.6674	0.0527	15.5229	0.1039	1.2765	0.0764
i-Butane	1.8869	0.0068	2.6322	0.0176	0.1952	0.0117
n-Butane	3.6180	0.0130	5.0471	0.0338	0.3606	0.0216
i-Pentane	0.7262	0.0026	1.2575	0.0084	0.0840	0.0050
n-Pentane	0.8000	0.0029	1.3852	0.0093	0.0917	0.0055
n-Hexane	1.0287	0.0037	2.1276	0.0142	0.1338	0.0080
Nitrogen	5.5794	0.0201	3.7511	0.0251	0.1938	0.0116
CO2	9.2680	0.0333	9.7891	0.0655	0.4942	0.0296

* Specified by user.

Material Stream: sep gas (continued)

Fluid Package: Basis-1
Property Package: Peng-Robinson

COMPOSITION

Vapour Phase (continued)

Phase Fraction 0.9999

COMPONENTS	MOLAR FLOW (kgmole/h)	MOLE FRACTION	MASS FLOW (tonne/d)	MASS FRACTION	LIQUID VOLUME FLOW (m3/h)	LIQUID VOLUME FRACTION
H2S	0.0006	0.0000	0.0005	0.0000	0.0000	0.0000
H2O	3.6457	0.0131	1.5763	0.0105	0.0658	0.0039
NBP[1]95*	0.2399	0.0009	0.3911	0.0026	0.0240	0.0014
NBP[1]121*	0.2657	0.0010	0.4646	0.0031	0.0281	0.0017
NBP[1]147*	0.3137	0.0011	0.6037	0.0040	0.0359	0.0021
NBP[1]171*	0.5433	0.0020	1.1433	0.0076	0.0669	0.0040
NBP[1]195*	0.6293	0.0023	1.4132	0.0095	0.0818	0.0049
NBP[1]222*	0.3899	0.0014	0.9417	0.0063	0.0538	0.0032
NBP[1]248*	0.2614	0.0009	0.6787	0.0045	0.0383	0.0023
NBP[1]273*	0.1627	0.0006	0.4518	0.0030	0.0252	0.0015
NBP[1]299*	0.0942	0.0003	0.2788	0.0019	0.0154	0.0009
NBP[1]325*	0.0480	0.0002	0.1509	0.0010	0.0082	0.0005
NBP[1]351*	0.0263	0.0001	0.0880	0.0006	0.0048	0.0003
NBP[1]377*	0.0156	0.0001	0.0555	0.0004	0.0030	0.0002
NBP[1]402*	0.0091	0.0000	0.0344	0.0002	0.0018	0.0001
NBP[1]428*	0.0053	0.0000	0.0214	0.0001	0.0011	0.0001
NBP[1]454*	0.0032	0.0000	0.0137	0.0001	0.0007	0.0000
NBP[1]480*	0.0019	0.0000	0.0087	0.0001	0.0004	0.0000
NBP[1]505*	0.0010	0.0000	0.0052	0.0000	0.0003	0.0000
NBP[1]531*	0.0006	0.0000	0.0029	0.0000	0.0001	0.0000
NBP[1]557*	0.0003	0.0000	0.0016	0.0000	0.0001	0.0000
NBP[1]582*	0.0001	0.0000	0.0009	0.0000	0.0000	0.0000
NBP[1]608*	0.0001	0.0000	0.0005	0.0000	0.0000	0.0000
NBP[1]634*	0.0000	0.0000	0.0002	0.0000	0.0000	0.0000
NBP[1]659*	0.0000	0.0000	0.0001	0.0000	0.0000	0.0000
NBP[1]685*	0.0000	0.0000	0.0001	0.0000	0.0000	0.0000
NBP[1]711*	0.0000	0.0000	0.0000	0.0000	0.0000	0.0000
NBP[1]736*	0.0000	0.0000	0.0000	0.0000	0.0000	0.0000
NBP[1]762*	0.0000	0.0000	0.0000	0.0000	0.0000	0.0000
NBP[1]788*	0.0000	0.0000	0.0000	0.0000	0.0000	0.0000
NBP[1]825*	0.0000	0.0000	0.0000	0.0000	0.0000	0.0000
NBP[1]873*	0.0000	0.0000	0.0000	0.0000	0.0000	0.0000
NBP[1]926*	0.0000	0.0000	0.0000	0.0000	0.0000	0.0000
NBP[1]978*	0.0000	0.0000	0.0000	0.0000	0.0000	0.0000
NBP[1]1021*	0.0000	0.0000	0.0000	0.0000	0.0000	0.0000
NBP[1]1075*	0.0000	0.0000	0.0000	0.0000	0.0000	0.0000
NBP[1]1123*	0.0000	0.0000	0.0000	0.0000	0.0000	0.0000
NBP[1]1173*	0.0000	0.0000	0.0000	0.0000	0.0000	0.0000
NBP[1]1250*	0.0000	0.0000	0.0000	0.0000	0.0000	0.0000
NBP[1]1339*	0.0000	0.0000	0.0000	0.0000	0.0000	0.0000
NBP[1]1432*	0.0000	0.0000	0.0000	0.0000	0.0000	0.0000
NBP[1]1528*	0.0000	0.0000	0.0000	0.0000	0.0000	0.0000
NBP[1]1637*	0.0000	0.0000	0.0000	0.0000	0.0000	0.0000
NBP[1]1732*	0.0000	0.0000	0.0000	0.0000	0.0000	0.0000
NBP[1]1819*	0.0000	0.0000	0.0000	0.0000	0.0000	0.0000
NBP[1]1913*	0.0000	0.0000	0.0000	0.0000	0.0000	0.0000
Total	278.2343	1.0000	149.4593	1.0000	16.7001	1.0000

Liquid Phase

Phase Fraction 6.288e-005

COMPONENTS	MOLAR FLOW (kgmole/h)	MOLE FRACTION	MASS FLOW (tonne/d)	MASS FRACTION	LIQUID VOLUME FLOW (m3/h)	LIQUID VOLUME FRACTION
Methane	0.0032	0.1828	0.0012	0.0038	0.0002	0.0136
Ethane	0.0007	0.0412	0.0005	0.0016	0.0001	0.0048
Propane	0.0006	0.0326	0.0006	0.0019	0.0000	0.0039

* Specified by user.

Material Stream: sep gas (continued)

Fluid Package: Basis-1
Property Package: Peng-Robinson

COMPOSITION

Liquid Phase (continued)

Phase Fraction 6.288e-005

COMPONENTS	MOLAR FLOW (kgmole/h)	MOLE FRACTION	MASS FLOW (tonne/d)	MASS FRACTION	LIQUID VOLUME FLOW (m3/h)	LIQUID VOLUME FRACTION
i-Butane	0.0001	0.0060	0.0001	0.0005	0.0000	0.0009
n-Butane	0.0002	0.0126	0.0003	0.0010	0.0000	0.0017
i-Pentane	0.0001	0.0037	0.0001	0.0003	0.0000	0.0006
n-Pentane	0.0001	0.0044	0.0001	0.0004	0.0000	0.0007
n-Hexane	0.0002	0.0089	0.0003	0.0010	0.0000	0.0016
Nitrogen	0.0001	0.0045	0.0001	0.0002	0.0000	0.0002
CO2	0.0003	0.0155	0.0003	0.0009	0.0000	0.0012
H2S	0.0000	0.0000	0.0000	0.0000	0.0000	0.0000
H2O	0.0001	0.0059	0.0000	0.0001	0.0000	0.0001
NBP[1]95*	0.0000	0.0013	0.0000	0.0001	0.0000	0.0002
NBP[1]121*	0.0000	0.0017	0.0001	0.0002	0.0000	0.0002
NBP[1]147*	0.0000	0.0024	0.0001	0.0002	0.0000	0.0004
NBP[1]171*	0.0001	0.0049	0.0002	0.0006	0.0000	0.0008
NBP[1]195*	0.0001	0.0069	0.0003	0.0008	0.0000	0.0012
NBP[1]222*	0.0001	0.0055	0.0002	0.0007	0.0000	0.0011
NBP[1]248*	0.0001	0.0047	0.0002	0.0007	0.0000	0.0010
NBP[1]273*	0.0001	0.0037	0.0002	0.0006	0.0000	0.0008
NBP[1]299*	0.0000	0.0028	0.0001	0.0005	0.0000	0.0006
NBP[1]325*	0.0000	0.0019	0.0001	0.0003	0.0000	0.0005
NBP[1]351*	0.0000	0.0014	0.0001	0.0003	0.0000	0.0004
NBP[1]377*	0.0000	0.0011	0.0001	0.0002	0.0000	0.0003
NBP[1]402*	0.0000	0.0009	0.0001	0.0002	0.0000	0.0003
NBP[1]428*	0.0000	0.0008	0.0001	0.0002	0.0000	0.0002
NBP[1]454*	0.0000	0.0006	0.0000	0.0002	0.0000	0.0002
NBP[1]480*	0.0000	0.0005	0.0000	0.0001	0.0000	0.0002
NBP[1]505*	0.0000	0.0004	0.0000	0.0001	0.0000	0.0002
NBP[1]531*	0.0000	0.0004	0.0000	0.0001	0.0000	0.0001
NBP[1]557*	0.0000	0.0003	0.0000	0.0001	0.0000	0.0001
NBP[1]582*	0.0000	0.0002	0.0000	0.0001	0.0000	0.0001
NBP[1]608*	0.0000	0.0002	0.0000	0.0001	0.0000	0.0001
NBP[1]634*	0.0000	0.0001	0.0000	0.0001	0.0000	0.0001
NBP[1]659*	0.0000	0.0001	0.0000	0.0000	0.0000	0.0001
NBP[1]685*	0.0000	0.0001	0.0000	0.0000	0.0000	0.0000
NBP[1]711*	0.0000	0.0001	0.0000	0.0000	0.0000	0.0000
NBP[1]736*	0.0000	0.0000	0.0000	0.0000	0.0000	0.0000
NBP[1]762*	0.0000	0.0000	0.0000	0.0000	0.0000	0.0000
NBP[1]788*	0.0000	0.0000	0.0000	0.0000	0.0000	0.0000
NBP[1]825*	0.0000	0.0000	0.0000	0.0000	0.0000	0.0000
NBP[1]873*	0.0000	0.0000	0.0000	0.0000	0.0000	0.0000
NBP[1]926*	0.0000	0.0000	0.0000	0.0000	0.0000	0.0000
NBP[1]978*	0.0000	0.0000	0.0000	0.0000	0.0000	0.0000
NBP[1]1021*	0.0000	0.0000	0.0000	0.0000	0.0000	0.0000
NBP[1]1075*	0.0000	0.0000	0.0000	0.0000	0.0000	0.0000
NBP[1]1123*	0.0000	0.0000	0.0000	0.0000	0.0000	0.0000
NBP[1]1173*	0.0000	0.0000	0.0000	0.0000	0.0000	0.0000
NBP[1]1250*	0.0000	0.0000	0.0000	0.0000	0.0000	0.0000
NBP[1]1339*	0.0000	0.0000	0.0000	0.0000	0.0000	0.0000
NBP[1]1432*	0.0000	0.0000	0.0000	0.0000	0.0000	0.0000
NBP[1]1528*	0.0000	0.0000	0.0000	0.0000	0.0000	0.0000
NBP[1]1637*	0.0000	0.0000	0.0000	0.0000	0.0000	0.0000
NBP[1]1732*	0.0000	0.0000	0.0000	0.0000	0.0000	0.0000
NBP[1]1819*	0.0000	0.0002	0.0001	0.0003	0.0000	0.0003
NBP[1]1913*	0.0112	0.6386	0.3147	0.9815	0.0121	0.9611
Total	0.0175	1.0000	0.3206	1.0000	0.0126	1.0000

* Specified by user.

Material Stream: sep gas (continued)

Fluid Package: Basis-1
Property Package: Peng-Robinson

COMPOSITION

Aqueous Phase

Phase Fraction 0.0000

COMPONENTS	MOLAR FLOW (kgmole/h)	MOLE FRACTION	MASS FLOW (tonne/d)	MASS FRACTION	LIQUID VOLUME FLOW (m3/h)	LIQUID VOLUME FRACTION
Methane	0.0000	0.0000	0.0000	0.0000	0.0000	0.0000
Ethane	0.0000	0.0000	0.0000	0.0000	0.0000	0.0000
Propane	0.0000	0.0000	0.0000	0.0000	0.0000	0.0000
i-Butane	0.0000	0.0000	0.0000	0.0000	0.0000	0.0000
n-Butane	0.0000	0.0000	0.0000	0.0000	0.0000	0.0000
i-Pentane	0.0000	0.0000	0.0000	0.0000	0.0000	0.0000
n-Pentane	0.0000	0.0000	0.0000	0.0000	0.0000	0.0000
n-Hexane	0.0000	0.0000	0.0000	0.0000	0.0000	0.0000
Nitrogen	0.0000	0.0000	0.0000	0.0000	0.0000	0.0000
CO2	0.0000	0.0003	0.0000	0.0006	0.0000	0.0007
H2S	0.0000	0.0000	0.0000	0.0000	0.0000	0.0000
H2O	0.0000	0.9997	0.0000	0.9994	0.0000	0.9992
NBP[1]95*	0.0000	0.0000	0.0000	0.0000	0.0000	0.0000
NBP[1]121*	0.0000	0.0000	0.0000	0.0000	0.0000	0.0000
NBP[1]147*	0.0000	0.0000	0.0000	0.0000	0.0000	0.0000
NBP[1]171*	0.0000	0.0000	0.0000	0.0000	0.0000	0.0000
NBP[1]195*	0.0000	0.0000	0.0000	0.0000	0.0000	0.0000
NBP[1]222*	0.0000	0.0000	0.0000	0.0000	0.0000	0.0000
NBP[1]248*	0.0000	0.0000	0.0000	0.0000	0.0000	0.0000
NBP[1]273*	0.0000	0.0000	0.0000	0.0000	0.0000	0.0000
NBP[1]299*	0.0000	0.0000	0.0000	0.0000	0.0000	0.0000
NBP[1]325*	0.0000	0.0000	0.0000	0.0000	0.0000	0.0000
NBP[1]351*	0.0000	0.0000	0.0000	0.0000	0.0000	0.0000
NBP[1]377*	0.0000	0.0000	0.0000	0.0000	0.0000	0.0000
NBP[1]402*	0.0000	0.0000	0.0000	0.0000	0.0000	0.0000
NBP[1]428*	0.0000	0.0000	0.0000	0.0000	0.0000	0.0000
NBP[1]454*	0.0000	0.0000	0.0000	0.0000	0.0000	0.0000
NBP[1]480*	0.0000	0.0000	0.0000	0.0000	0.0000	0.0000
NBP[1]505*	0.0000	0.0000	0.0000	0.0000	0.0000	0.0000
NBP[1]531*	0.0000	0.0000	0.0000	0.0000	0.0000	0.0000
NBP[1]557*	0.0000	0.0000	0.0000	0.0000	0.0000	0.0000
NBP[1]582*	0.0000	0.0000	0.0000	0.0000	0.0000	0.0000
NBP[1]608*	0.0000	0.0000	0.0000	0.0000	0.0000	0.0000
NBP[1]634*	0.0000	0.0000	0.0000	0.0000	0.0000	0.0000
NBP[1]659*	0.0000	0.0000	0.0000	0.0000	0.0000	0.0000
NBP[1]685*	0.0000	0.0000	0.0000	0.0000	0.0000	0.0000
NBP[1]711*	0.0000	0.0000	0.0000	0.0000	0.0000	0.0000
NBP[1]736*	0.0000	0.0000	0.0000	0.0000	0.0000	0.0000
NBP[1]762*	0.0000	0.0000	0.0000	0.0000	0.0000	0.0000
NBP[1]788*	0.0000	0.0000	0.0000	0.0000	0.0000	0.0000
NBP[1]825*	0.0000	0.0000	0.0000	0.0000	0.0000	0.0000
NBP[1]873*	0.0000	0.0000	0.0000	0.0000	0.0000	0.0000
NBP[1]926*	0.0000	0.0000	0.0000	0.0000	0.0000	0.0000
NBP[1]978*	0.0000	0.0000	0.0000	0.0000	0.0000	0.0000
NBP[1]1021*	0.0000	0.0000	0.0000	0.0000	0.0000	0.0000
NBP[1]1075*	0.0000	0.0000	0.0000	0.0000	0.0000	0.0000
NBP[1]1123*	0.0000	0.0000	0.0000	0.0000	0.0000	0.0000
NBP[1]1173*	0.0000	0.0000	0.0000	0.0000	0.0000	0.0000
NBP[1]1250*	0.0000	0.0000	0.0000	0.0000	0.0000	0.0000
NBP[1]1339*	0.0000	0.0000	0.0000	0.0000	0.0000	0.0000
NBP[1]1432*	0.0000	0.0000	0.0000	0.0000	0.0000	0.0000
NBP[1]1528*	0.0000	0.0000	0.0000	0.0000	0.0000	0.0000
NBP[1]1637*	0.0000	0.0000	0.0000	0.0000	0.0000	0.0000
NBP[1]1732*	0.0000	0.0000	0.0000	0.0000	0.0000	0.0000

* Specified by user.

Material Stream: sep gas (continued)

Fluid Package: Basis-1
Property Package: Peng-Robinson

COMPOSITION

Aqueous Phase (continued)

Phase Fraction 0.0000

COMPONENTS	MOLAR FLOW (kgmole/h)	MOLE FRACTION	MASS FLOW (tonne/d)	MASS FRACTION	LIQUID VOLUME FLOW (m3/h)	LIQUID VOLUME FRACTION
NBP[1]1819*	0.0000	0.0000	0.0000	0.0000	0.0000	0.0000
NBP[1]1913*	0.0000	0.0000	0.0000	0.0000	0.0000	0.0000
Total	0.0000	1.0000	0.0000	1.0000	0.0000	1.0000

Material Stream: Sinjhoro Plant-

Fluid Package: Basis-1
Property Package: Peng-Robinson

CONDITIONS

		Overall	Vapour Phase	Liquid Phase	Aqueous Phase
Vapour / Phase Fraction		0.6795	0.6795	0.0494	0.2711
Temperature:	(F)	96.33	96.33	96.33	96.33
Pressure:	(psig)	650.0	650.0	650.0	650.0
Molar Flow	(MMSCFD)	7.874	5.350	0.3887	2.135
Mass Flow	(tonne/d)	237.5	137.1	54.50	46.00
Std Ideal Liq Vol Flow	(barrel/day)	3142	2390	462.2	290.0
Molar Enthalpy	(kJ/kgmole)	-1.514e+005	-8.942e+004	-2.695e+005	-2.854e+005
Molar Entropy	(kJ/kgmole-C)	132.2	156.4	215.9	56.44
Heat Flow	(MMBtu/hr)	-56.29	-22.59	-4.946	-28.76
Liq Vol Flow @Std Cond	(barrel/day)	2.954e+005 *	9.473e+005	444.6	285.1

PROPERTIES

		Overall	Vapour Phase	Liquid Phase	Aqueous Phase
Molecular Weight		25.24	21.43	117.3	18.03
Molar Density	(kgmole/m3)	2.935	2.071	6.399	55.51
Mass Density	(kg/m3)	74.09	44.39	750.5	1001
Act. Volume Flow	(barrel/day)	2.017e+004	1.942e+004	456.7	289.1
Mass Enthalpy	(kJ/kg)	-6000	-4173	-2298	-1.583e+004
Mass Entropy	(kJ/kg-C)	5.239	7.297	1.841	3.131
Heat Capacity	(kJ/kgmole-C)	67.09	50.24	241.1	77.63
Mass Heat Capacity	(kJ/kg-C)	2.658	2.344	2.055	4.306
LHV Molar Basis (Std)	(Btu/SCF)	---	---	---	3.322e-004
LHV Mass Basis (Std)	(kJ/kg)	---	---	---	1.627e-002
Phase Fraction [Vol. Basis]		0.7606	0.7606	0.1471	9.229e-002
Phase Fraction [Mass Basis]		0.5769	0.5769	0.2294	0.1936
Partial Pressure of CO2	(psig)	7.861	---	---	---
Cost Based on Flow	(Cost/s)	0.0000	0.0000	0.0000	0.0000
Act. Gas Flow	(ACT_m3/h)	128.7	128.7	---	---
Avg. Liq. Density	(kgmole/m3)	18.84	16.83	6.323	55.35
Specific Heat	(kJ/kgmole-C)	67.09	50.24	241.1	77.63
Std. Gas Flow	(STD_m3/h)	9272	6301	457.8	2514
Std. Ideal Liq. Mass Density	(kg/m3)	475.5	360.7	741.6	997.7
Act. Liq. Flow	(barrel/day)	745.8	---	456.7	289.1
Z Factor		---	0.8615	0.2789	3.214e-002
Watson K		15.58	17.25	12.04	8.495
User Property		---	---	---	---
Partial Pressure of H2S	(psig)	-14.69	---	---	---
Cp/(Cp - R)		1.141	1.198	1.036	1.120
Cp/Cv		1.191	1.449	1.238	1.153
Heat of Vap.	(kJ/kgmole)	6.759e+004	---	---	---
Kinematic Viscosity	(cSt)	---	0.2840	6.057	0.7074
Liq. Mass Density (Std. Cond)	(kg/m3)	5.058	0.9099	771.0	1015
Liq. Vol. Flow (Std. Cond)	(barrel/day)	2.954e+005	9.473e+005	444.6	285.1
Liquid Fraction		0.3205	0.0000	1.000	1.000
Molar Volume	(m3/kgmole)	0.3407	0.4828	0.1563	1.801e-002

* Specified by user.

Material Stream: Sinjhoro Plant- (continued)

Fluid Package: Basis-1
Property Package: Peng-Robinson

PROPERTIES

	Overall	Vapour Phase	Liquid Phase	Aqueous Phase
Mass Heat of Vap. (kJ/kg)	2678	---	---	---
Phase Fraction [Molar Basis]	0.6795	0.6795	0.0494	0.2711
Surface Tension (dyne/cm)	---	---	14.18	70.20
Thermal Conductivity (W/m-K)	---	3.536e-002	9.620e-002	0.6260
Viscosity (cP)	---	1.261e-002	4.546	0.7079
Cv (Semi-Ideal) (kJ/kgmole-C)	58.77	41.93	232.8	69.31
Mass Cv (Semi-Ideal) (kJ/kg-C)	2.329	1.956	1.985	3.845
Cv (kJ/kgmole-C)	56.32	34.67	194.7	67.35
Mass Cv (kJ/kg-C)	2.232	1.618	1.660	3.736
Cv (Ent. Method) (kJ/kgmole-C)	---	---	---	66.70
Mass Cv (Ent. Method) (kJ/kg-C)	---	---	---	3.700
Cp/Cv (Ent. Method)	---	---	---	1.164
Reid VP at 37.8 C (psig)	3319	---	135.3	---
True VP at 37.8 C (psig)	6318	3721	659.9	33.47
Liq. Vol. Flow - Sum(Std. Cond) (barrel/day)	9.481e+005	9.473e+005	444.6	285.1
HHV Molar Basis (Std) (Btu/SCF)	---	---	---	46.44
HHV Mass Basis (Std) (kJ/kg)	---	---	---	2274
CO2 Loading	---	---	---	---
CO2 App ML Con (kgmole/m3)	---	---	0.1064	2.606e-002
CO2 App WT Con (kgmol/kg)	---	---	1.418e-004	2.604e-005
Phase Fraction [Act. Vol. Basis]	0.9630	0.9630	2.265e-002	1.434e-002
Mass Exergy (kJ/kg)	256.0	---	---	---
Viscosity Index	-18.35	---	---	---
Ideal Gas Cp/Cv	1.214	1.245	1.046	1.328
Ideal Gas Cp (kJ/kgmole-C)	47.15	42.19	189.7	33.64
Mass Ideal Gas Cp (kJ/kg-C)	1.868	1.969	1.618	1.866
Bubble Point Pressure (psig)	6259	---	---	---

COMPOSITION

Overall Phase

Vapour Fraction 0.6795

COMPONENTS	MOLAR FLOW (kgmole/h)	MOLE FRACTION	MASS FLOW (tonne/d)	MASS FRACTION	LIQUID VOLUME FLOW (m3/h)	LIQUID VOLUME FRACTION
Methane	207.0440	0.5280	79.7181	0.3356	11.0944	0.5330
Ethane	28.8006	0.0734	20.7848	0.0875	2.4348	0.1170
Propane	15.2677	0.0389	16.1583	0.0680	1.3288	0.0638
i-Butane	2.0287	0.0052	2.8300	0.0119	0.2098	0.0101
n-Butane	3.9513	0.0101	5.5120	0.0232	0.3938	0.0189
i-Pentane	0.8495	0.0022	1.4710	0.0062	0.0983	0.0047
n-Pentane	0.9602	0.0024	1.6627	0.0070	0.1100	0.0053
n-Hexane	1.4698	0.0037	3.0399	0.0128	0.1911	0.0092
Nitrogen	5.5989	0.0143	3.7642	0.0158	0.1945	0.0093
CO2	9.4151	0.0240	9.9445	0.0419	0.5020	0.0241
H2S	0.0006	0.0000	0.0005	0.0000	0.0000	0.0000
H2O	106.6990	0.2721	46.1326	0.1942	1.9261	0.0925
NBP[1]95*	0.2883	0.0007	0.4699	0.0020	0.0288	0.0014
NBP[1]121*	0.3381	0.0009	0.5912	0.0025	0.0358	0.0017
NBP[1]147*	0.4314	0.0011	0.8304	0.0035	0.0494	0.0024
NBP[1]171*	0.8224	0.0021	1.7306	0.0073	0.1013	0.0049
NBP[1]195*	1.0758	0.0027	2.4160	0.0102	0.1398	0.0067
NBP[1]222*	0.8003	0.0020	1.9331	0.0081	0.1105	0.0053
NBP[1]248*	0.6657	0.0017	1.7287	0.0073	0.0976	0.0047
NBP[1]273*	0.5358	0.0014	1.4881	0.0063	0.0831	0.0040
NBP[1]299*	0.4185	0.0011	1.2393	0.0052	0.0684	0.0033
NBP[1]325*	0.3029	0.0008	0.9528	0.0040	0.0521	0.0025
NBP[1]351*	0.2456	0.0006	0.8214	0.0035	0.0445	0.0021
NBP[1]377*	0.2247	0.0006	0.8014	0.0034	0.0429	0.0021

* Specified by user.

Material Stream: Sinjhoro Plant- (continued)

Fluid Package: Basis-1
Property Package: Peng-Robinson

COMPOSITION

Overall Phase (continued)

Vapour Fraction 0.6795

COMPONENTS	MOLAR FLOW (kgmole/h)	MOLE FRACTION	MASS FLOW (tonne/d)	MASS FRACTION	LIQUID VOLUME FLOW (m3/h)	LIQUID VOLUME FRACTION
NBP[1]402*	0.2061	0.0005	0.7838	0.0033	0.0416	0.0020
NBP[1]428*	0.1961	0.0005	0.7956	0.0033	0.0418	0.0020
NBP[1]454*	0.1956	0.0005	0.8480	0.0036	0.0441	0.0021
NBP[1]480*	0.1982	0.0005	0.9182	0.0039	0.0473	0.0023
NBP[1]505*	0.1920	0.0005	0.9484	0.0040	0.0484	0.0023
NBP[1]531*	0.1852	0.0005	0.9740	0.0041	0.0492	0.0024
NBP[1]557*	0.1784	0.0005	0.9978	0.0042	0.0500	0.0024
NBP[1]582*	0.1706	0.0004	1.0132	0.0043	0.0503	0.0024
NBP[1]608*	0.1643	0.0004	1.0351	0.0044	0.0510	0.0025
NBP[1]634*	0.1611	0.0004	1.0753	0.0045	0.0526	0.0025
NBP[1]659*	0.1586	0.0004	1.1194	0.0047	0.0543	0.0026
NBP[1]685*	0.1641	0.0004	1.2227	0.0051	0.0588	0.0028
NBP[1]711*	0.1715	0.0004	1.3445	0.0057	0.0642	0.0031
NBP[1]736*	0.1697	0.0004	1.3915	0.0059	0.0659	0.0032
NBP[1]762*	0.1653	0.0004	1.4214	0.0060	0.0669	0.0032
NBP[1]788*	0.1585	0.0004	1.4424	0.0061	0.0674	0.0032
NBP[1]825*	0.2655	0.0007	2.5963	0.0109	0.1201	0.0058
NBP[1]873*	0.1830	0.0005	1.9404	0.0082	0.0887	0.0043
NBP[1]926*	0.1437	0.0004	1.6472	0.0069	0.0744	0.0036
NBP[1]978*	0.1474	0.0004	1.8524	0.0078	0.0825	0.0040
NBP[1]1021*	0.0728	0.0002	0.9655	0.0041	0.0426	0.0020
NBP[1]1075*	0.0449	0.0001	0.6310	0.0027	0.0276	0.0013
NBP[1]1123*	0.0417	0.0001	0.6267	0.0026	0.0271	0.0013
NBP[1]1173*	0.0300	0.0001	0.4772	0.0020	0.0205	0.0010
NBP[1]1250*	0.0393	0.0001	0.6767	0.0028	0.0287	0.0014
NBP[1]1339*	0.0364	0.0001	0.6999	0.0029	0.0291	0.0014
NBP[1]1432*	0.0257	0.0001	0.5397	0.0023	0.0221	0.0011
NBP[1]1528*	0.0180	0.0000	0.4082	0.0017	0.0165	0.0008
NBP[1]1637*	0.0127	0.0000	0.3047	0.0013	0.0122	0.0006
NBP[1]1732*	0.0101	0.0000	0.2565	0.0011	0.0101	0.0005
NBP[1]1819*	0.0097	0.0000	0.2590	0.0011	0.0101	0.0005
NBP[1]1913*	0.0112	0.0000	0.3148	0.0013	0.0121	0.0006
Total	392.1623	1.0000	237.5489	1.0000	20.8162	1.0000

Vapour Phase

Phase Fraction 0.6795

COMPONENTS	MOLAR FLOW (kgmole/h)	MOLE FRACTION	MASS FLOW (tonne/d)	MASS FRACTION	LIQUID VOLUME FLOW (m3/h)	LIQUID VOLUME FRACTION
Methane	204.0796	0.7658	78.5767	0.5733	10.9355	0.6907
Ethane	27.3234	0.1025	19.7187	0.1439	2.3100	0.1459
Propane	13.3253	0.0500	14.1025	0.1029	1.1597	0.0732
i-Butane	1.5558	0.0058	2.1702	0.0158	0.1609	0.0102
n-Butane	2.8316	0.0106	3.9500	0.0288	0.2822	0.0178
i-Pentane	0.4661	0.0017	0.8072	0.0059	0.0539	0.0034
n-Pentane	0.4732	0.0018	0.8194	0.0060	0.0542	0.0034
n-Hexane	0.4069	0.0015	0.8416	0.0061	0.0529	0.0033
Nitrogen	5.5622	0.0209	3.7395	0.0273	0.1932	0.0122
CO2	9.0433	0.0339	9.5518	0.0697	0.4822	0.0305
H2S	0.0005	0.0000	0.0004	0.0000	0.0000	0.0000
H2O	0.4135	0.0016	0.1788	0.0013	0.0075	0.0005
NBP[1]95*	0.1440	0.0005	0.2347	0.0017	0.0144	0.0009
NBP[1]121*	0.1368	0.0005	0.2391	0.0017	0.0145	0.0009
NBP[1]147*	0.1346	0.0005	0.2591	0.0019	0.0154	0.0010
NBP[1]171*	0.1933	0.0007	0.4067	0.0030	0.0238	0.0015
NBP[1]195*	0.1840	0.0007	0.4133	0.0030	0.0239	0.0015

* Specified by user.

Material Stream: Sinjhoro Plant- (continued)

Fluid Package: Basis-1
Property Package: Peng-Robinson

COMPOSITION

Vapour Phase (continued)

Phase Fraction 0.6795

COMPONENTS	MOLAR FLOW (kgmole/h)	MOLE FRACTION	MASS FLOW (tonne/d)	MASS FRACTION	LIQUID VOLUME FLOW (m3/h)	LIQUID VOLUME FRACTION
NBP[1]222*	0.0904	0.0003	0.2183	0.0016	0.0125	0.0008
NBP[1]248*	0.0490	0.0002	0.1272	0.0009	0.0072	0.0005
NBP[1]273*	0.0250	0.0001	0.0695	0.0005	0.0039	0.0002
NBP[1]299*	0.0121	0.0000	0.0359	0.0003	0.0020	0.0001
NBP[1]325*	0.0052	0.0000	0.0164	0.0001	0.0009	0.0001
NBP[1]351*	0.0025	0.0000	0.0082	0.0001	0.0004	0.0000
NBP[1]377*	0.0013	0.0000	0.0045	0.0000	0.0002	0.0000
NBP[1]402*	0.0006	0.0000	0.0024	0.0000	0.0001	0.0000
NBP[1]428*	0.0003	0.0000	0.0013	0.0000	0.0001	0.0000
NBP[1]454*	0.0002	0.0000	0.0008	0.0000	0.0000	0.0000
NBP[1]480*	0.0001	0.0000	0.0004	0.0000	0.0000	0.0000
NBP[1]505*	0.0000	0.0000	0.0002	0.0000	0.0000	0.0000
NBP[1]531*	0.0000	0.0000	0.0001	0.0000	0.0000	0.0000
NBP[1]557*	0.0000	0.0000	0.0001	0.0000	0.0000	0.0000
NBP[1]582*	0.0000	0.0000	0.0000	0.0000	0.0000	0.0000
NBP[1]608*	0.0000	0.0000	0.0000	0.0000	0.0000	0.0000
NBP[1]634*	0.0000	0.0000	0.0000	0.0000	0.0000	0.0000
NBP[1]659*	0.0000	0.0000	0.0000	0.0000	0.0000	0.0000
NBP[1]685*	0.0000	0.0000	0.0000	0.0000	0.0000	0.0000
NBP[1]711*	0.0000	0.0000	0.0000	0.0000	0.0000	0.0000
NBP[1]736*	0.0000	0.0000	0.0000	0.0000	0.0000	0.0000
NBP[1]762*	0.0000	0.0000	0.0000	0.0000	0.0000	0.0000
NBP[1]788*	0.0000	0.0000	0.0000	0.0000	0.0000	0.0000
NBP[1]825*	0.0000	0.0000	0.0000	0.0000	0.0000	0.0000
NBP[1]873*	0.0000	0.0000	0.0000	0.0000	0.0000	0.0000
NBP[1]926*	0.0000	0.0000	0.0000	0.0000	0.0000	0.0000
NBP[1]978*	0.0000	0.0000	0.0000	0.0000	0.0000	0.0000
NBP[1]1021*	0.0000	0.0000	0.0000	0.0000	0.0000	0.0000
NBP[1]1075*	0.0000	0.0000	0.0000	0.0000	0.0000	0.0000
NBP[1]1123*	0.0000	0.0000	0.0000	0.0000	0.0000	0.0000
NBP[1]1173*	0.0000	0.0000	0.0000	0.0000	0.0000	0.0000
NBP[1]1250*	0.0000	0.0000	0.0000	0.0000	0.0000	0.0000
NBP[1]1339*	0.0000	0.0000	0.0000	0.0000	0.0000	0.0000
NBP[1]1432*	0.0000	0.0000	0.0000	0.0000	0.0000	0.0000
NBP[1]1528*	0.0000	0.0000	0.0000	0.0000	0.0000	0.0000
NBP[1]1637*	0.0000	0.0000	0.0000	0.0000	0.0000	0.0000
NBP[1]1732*	0.0000	0.0000	0.0000	0.0000	0.0000	0.0000
NBP[1]1819*	0.0091	0.0000	0.2419	0.0018	0.0094	0.0006
NBP[1]1913*	0.0112	0.0000	0.3148	0.0023	0.0121	0.0008
Total	266.4811	1.0000	137.0519	1.0000	15.8332	1.0000

Liquid Phase

Phase Fraction 4.937e-002

COMPONENTS	MOLAR FLOW (kgmole/h)	MOLE FRACTION	MASS FLOW (tonne/d)	MASS FRACTION	LIQUID VOLUME FLOW (m3/h)	LIQUID VOLUME FRACTION
Methane	2.9643	0.1531	1.1414	0.0209	0.1588	0.0519
Ethane	1.4772	0.0763	1.0661	0.0196	0.1249	0.0408
Propane	1.9425	0.1003	2.0558	0.0377	0.1691	0.0552
i-Butane	0.4729	0.0244	0.6597	0.0121	0.0489	0.0160
n-Butane	1.1197	0.0578	1.5619	0.0287	0.1116	0.0364
i-Pentane	0.3834	0.0198	0.6638	0.0122	0.0444	0.0145
n-Pentane	0.4870	0.0252	0.8433	0.0155	0.0558	0.0182
n-Hexane	1.0629	0.0549	2.1983	0.0403	0.1382	0.0451
Nitrogen	0.0356	0.0018	0.0239	0.0004	0.0012	0.0004
CO2	0.3219	0.0166	0.3400	0.0062	0.0172	0.0056

* Specified by user.

Material Stream: Sinjhoro Plant- (continued)

Fluid Package: Basis-1
Property Package: Peng-Robinson

COMPOSITION

Liquid Phase (continued)

Phase Fraction 4.937e-002

COMPONENTS	MOLAR FLOW (kgmole/h)	MOLE FRACTION	MASS FLOW (tonne/d)	MASS FRACTION	LIQUID VOLUME FLOW (m3/h)	LIQUID VOLUME FRACTION
H2S	0.0000	0.0000	0.0000	0.0000	0.0000	0.0000
H2O	0.0155	0.0008	0.0067	0.0001	0.0003	0.0001
NBP[1]95*	0.1443	0.0075	0.2352	0.0043	0.0144	0.0047
NBP[1]121*	0.2014	0.0104	0.3521	0.0065	0.0213	0.0070
NBP[1]147*	0.2968	0.0153	0.5713	0.0105	0.0340	0.0111
NBP[1]171*	0.6292	0.0325	1.3239	0.0243	0.0775	0.0253
NBP[1]195*	0.8917	0.0461	2.0027	0.0367	0.1159	0.0378
NBP[1]222*	0.7100	0.0367	1.7148	0.0315	0.0980	0.0320
NBP[1]248*	0.6167	0.0319	1.6015	0.0294	0.0904	0.0295
NBP[1]273*	0.5108	0.0264	1.4186	0.0260	0.0792	0.0259
NBP[1]299*	0.4064	0.0210	1.2034	0.0221	0.0665	0.0217
NBP[1]325*	0.2976	0.0154	0.9363	0.0172	0.0512	0.0167
NBP[1]351*	0.2432	0.0126	0.8132	0.0149	0.0440	0.0144
NBP[1]377*	0.2235	0.0115	0.7969	0.0146	0.0427	0.0139
NBP[1]402*	0.2055	0.0106	0.7814	0.0143	0.0414	0.0135
NBP[1]428*	0.1957	0.0101	0.7942	0.0146	0.0417	0.0136
NBP[1]454*	0.1954	0.0101	0.8473	0.0155	0.0441	0.0144
NBP[1]480*	0.1981	0.0102	0.9177	0.0168	0.0472	0.0154
NBP[1]505*	0.1920	0.0099	0.9481	0.0174	0.0484	0.0158
NBP[1]531*	0.1852	0.0096	0.9739	0.0179	0.0492	0.0161
NBP[1]557*	0.1784	0.0092	0.9978	0.0183	0.0500	0.0163
NBP[1]582*	0.1706	0.0088	1.0132	0.0186	0.0503	0.0164
NBP[1]608*	0.1643	0.0085	1.0351	0.0190	0.0510	0.0167
NBP[1]634*	0.1611	0.0083	1.0753	0.0197	0.0526	0.0172
NBP[1]659*	0.1586	0.0082	1.1194	0.0205	0.0543	0.0177
NBP[1]685*	0.1641	0.0085	1.2227	0.0224	0.0588	0.0192
NBP[1]711*	0.1715	0.0089	1.3445	0.0247	0.0642	0.0210
NBP[1]736*	0.1697	0.0088	1.3915	0.0255	0.0659	0.0215
NBP[1]762*	0.1653	0.0085	1.4214	0.0261	0.0669	0.0218
NBP[1]788*	0.1585	0.0082	1.4424	0.0265	0.0674	0.0220
NBP[1]825*	0.2655	0.0137	2.5963	0.0476	0.1201	0.0392
NBP[1]873*	0.1830	0.0095	1.9404	0.0356	0.0887	0.0290
NBP[1]926*	0.1437	0.0074	1.6472	0.0302	0.0744	0.0243
NBP[1]978*	0.1474	0.0076	1.8524	0.0340	0.0825	0.0269
NBP[1]1021*	0.0728	0.0038	0.9655	0.0177	0.0426	0.0139
NBP[1]1075*	0.0449	0.0023	0.6310	0.0116	0.0276	0.0090
NBP[1]1123*	0.0417	0.0022	0.6267	0.0115	0.0271	0.0089
NBP[1]1173*	0.0300	0.0015	0.4772	0.0088	0.0205	0.0067
NBP[1]1250*	0.0393	0.0020	0.6767	0.0124	0.0287	0.0094
NBP[1]1339*	0.0364	0.0019	0.6999	0.0128	0.0291	0.0095
NBP[1]1432*	0.0257	0.0013	0.5397	0.0099	0.0221	0.0072
NBP[1]1528*	0.0180	0.0009	0.4082	0.0075	0.0165	0.0054
NBP[1]1637*	0.0127	0.0007	0.3047	0.0056	0.0122	0.0040
NBP[1]1732*	0.0101	0.0005	0.2565	0.0047	0.0101	0.0033
NBP[1]1819*	0.0006	0.0000	0.0171	0.0003	0.0007	0.0002
NBP[1]1913*	0.0000	0.0000	0.0000	0.0000	0.0000	0.0000
Total	19.3601	1.0000	54.4963	1.0000	3.0619	1.0000

Aqueous Phase

Phase Fraction 0.2711

COMPONENTS	MOLAR FLOW (kgmole/h)	MOLE FRACTION	MASS FLOW (tonne/d)	MASS FRACTION	LIQUID VOLUME FLOW (m3/h)	LIQUID VOLUME FRACTION
Methane	0.0000	0.0000	0.0000	0.0000	0.0000	0.0000
Ethane	0.0000	0.0000	0.0000	0.0000	0.0000	0.0000
Propane	0.0000	0.0000	0.0000	0.0000	0.0000	0.0000

* Specified by user.

Material Stream: Sinjhoro Plant- (continued)

Fluid Package: Basis-1
Property Package: Peng-Robinson

COMPOSITION

Aqueous Phase (continued)

Phase Fraction 0.2711

COMPONENTS	MOLAR FLOW (kgmole/h)	MOLE FRACTION	MASS FLOW (tonne/d)	MASS FRACTION	LIQUID VOLUME FLOW (m3/h)	LIQUID VOLUME FRACTION
i-Butane	0.0000	0.0000	0.0000	0.0000	0.0000	0.0000
n-Butane	0.0000	0.0000	0.0000	0.0000	0.0000	0.0000
i-Pentane	0.0000	0.0000	0.0000	0.0000	0.0000	0.0000
n-Pentane	0.0000	0.0000	0.0000	0.0000	0.0000	0.0000
n-Hexane	0.0000	0.0000	0.0000	0.0000	0.0000	0.0000
Nitrogen	0.0011	0.0000	0.0007	0.0000	0.0000	0.0000
CO2	0.0499	0.0005	0.0527	0.0011	0.0027	0.0014
H2S	0.0000	0.0000	0.0000	0.0000	0.0000	0.0000
H2O	106.2700	0.9995	45.9472	0.9988	1.9183	0.9986
NBP[1]95*	0.0000	0.0000	0.0000	0.0000	0.0000	0.0000
NBP[1]121*	0.0000	0.0000	0.0000	0.0000	0.0000	0.0000
NBP[1]147*	0.0000	0.0000	0.0000	0.0000	0.0000	0.0000
NBP[1]171*	0.0000	0.0000	0.0000	0.0000	0.0000	0.0000
NBP[1]195*	0.0000	0.0000	0.0000	0.0000	0.0000	0.0000
NBP[1]222*	0.0000	0.0000	0.0000	0.0000	0.0000	0.0000
NBP[1]248*	0.0000	0.0000	0.0000	0.0000	0.0000	0.0000
NBP[1]273*	0.0000	0.0000	0.0000	0.0000	0.0000	0.0000
NBP[1]299*	0.0000	0.0000	0.0000	0.0000	0.0000	0.0000
NBP[1]325*	0.0000	0.0000	0.0000	0.0000	0.0000	0.0000
NBP[1]351*	0.0000	0.0000	0.0000	0.0000	0.0000	0.0000
NBP[1]377*	0.0000	0.0000	0.0000	0.0000	0.0000	0.0000
NBP[1]402*	0.0000	0.0000	0.0000	0.0000	0.0000	0.0000
NBP[1]428*	0.0000	0.0000	0.0000	0.0000	0.0000	0.0000
NBP[1]454*	0.0000	0.0000	0.0000	0.0000	0.0000	0.0000
NBP[1]480*	0.0000	0.0000	0.0000	0.0000	0.0000	0.0000
NBP[1]505*	0.0000	0.0000	0.0000	0.0000	0.0000	0.0000
NBP[1]531*	0.0000	0.0000	0.0000	0.0000	0.0000	0.0000
NBP[1]557*	0.0000	0.0000	0.0000	0.0000	0.0000	0.0000
NBP[1]582*	0.0000	0.0000	0.0000	0.0000	0.0000	0.0000
NBP[1]608*	0.0000	0.0000	0.0000	0.0000	0.0000	0.0000
NBP[1]634*	0.0000	0.0000	0.0000	0.0000	0.0000	0.0000
NBP[1]659*	0.0000	0.0000	0.0000	0.0000	0.0000	0.0000
NBP[1]685*	0.0000	0.0000	0.0000	0.0000	0.0000	0.0000
NBP[1]711*	0.0000	0.0000	0.0000	0.0000	0.0000	0.0000
NBP[1]736*	0.0000	0.0000	0.0000	0.0000	0.0000	0.0000
NBP[1]762*	0.0000	0.0000	0.0000	0.0000	0.0000	0.0000
NBP[1]788*	0.0000	0.0000	0.0000	0.0000	0.0000	0.0000
NBP[1]825*	0.0000	0.0000	0.0000	0.0000	0.0000	0.0000
NBP[1]873*	0.0000	0.0000	0.0000	0.0000	0.0000	0.0000
NBP[1]926*	0.0000	0.0000	0.0000	0.0000	0.0000	0.0000
NBP[1]978*	0.0000	0.0000	0.0000	0.0000	0.0000	0.0000
NBP[1]1021*	0.0000	0.0000	0.0000	0.0000	0.0000	0.0000
NBP[1]1075*	0.0000	0.0000	0.0000	0.0000	0.0000	0.0000
NBP[1]1123*	0.0000	0.0000	0.0000	0.0000	0.0000	0.0000
NBP[1]1173*	0.0000	0.0000	0.0000	0.0000	0.0000	0.0000
NBP[1]1250*	0.0000	0.0000	0.0000	0.0000	0.0000	0.0000
NBP[1]1339*	0.0000	0.0000	0.0000	0.0000	0.0000	0.0000
NBP[1]1432*	0.0000	0.0000	0.0000	0.0000	0.0000	0.0000
NBP[1]1528*	0.0000	0.0000	0.0000	0.0000	0.0000	0.0000
NBP[1]1637*	0.0000	0.0000	0.0000	0.0000	0.0000	0.0000
NBP[1]1732*	0.0000	0.0000	0.0000	0.0000	0.0000	0.0000
NBP[1]1819*	0.0000	0.0000	0.0000	0.0000	0.0000	0.0000
NBP[1]1913*	0.0000	0.0000	0.0000	0.0000	0.0000	0.0000
Total	106.3211	1.0000	46.0006	1.0000	1.9210	1.0000

* Specified by user.

Material Stream: Water-PRD

Fluid Package: Basis-1
Property Package: Peng-Robinson

CONDITIONS

	Overall
Vapour / Phase Fraction	---
Temperature: (F)	---
Pressure: (psig)	450.0 *
Molar Flow (MMSCFD)	2.142
Mass Flow (tonne/d)	46.13
Std Ideal Liq Vol Flow (barrel/day)	290.7
Molar Enthalpy (kJ/kgmole)	---
Molar Entropy (kJ/kgmole-C)	---
Heat Flow (MMBtu/hr)	---
Liq Vol Flow @Std Cond (barrel/day)	285.9 *

PROPERTIES

	Overall
Molecular Weight	18.02
Molar Density (kgmole/m3)	---
Mass Density (kg/m3)	---
Act. Volume Flow (barrel/day)	---
Mass Enthalpy (kJ/kg)	---
Mass Entropy (kJ/kg-C)	---
Heat Capacity (kJ/kgmole-C)	---
Mass Heat Capacity (kJ/kg-C)	---
LHV Molar Basis (Std) (Btu/SCF)	0.0000
LHV Mass Basis (Std) (kJ/kg)	0.0000
Phase Fraction [Vol. Basis]	0.0000
Phase Fraction [Mass Basis]	0.0000
Partial Pressure of CO2 (psig)	-14.70
Cost Based on Flow (Cost/s)	0.0000
Act. Gas Flow (ACT_m3/h)	---
Avg. Liq. Density (kgmole/m3)	55.40
Specific Heat (kJ/kgmole-C)	---
Std. Gas Flow (STD_m3/h)	2523
Std. Ideal Liq. Mass Density (kg/m3)	998.0
Act. Liq. Flow (barrel/day)	---
Z Factor	---
Watson K	---
User Property	---
Partial Pressure of H2S (psig)	-14.70
Cp/(Cp - R)	---
Cp/Cv	---
Heat of Vap. (kJ/kgmole)	---
Kinematic Viscosity (cSt)	---
Liq. Mass Density (Std. Cond) (kg/m3)	1015
Liq. Vol. Flow (Std. Cond) (barrel/day)	285.9
Liquid Fraction	---
Molar Volume (m3/kgmole)	---
Mass Heat of Vap. (kJ/kg)	---
Phase Fraction [Molar Basis]	---
Surface Tension (dyne/cm)	---
Thermal Conductivity (W/m-K)	---
Viscosity (cP)	---
Cv (Semi-Ideal) (kJ/kgmole-C)	---
Mass Cv (Semi-Ideal) (kJ/kg-C)	---
Cv (kJ/kgmole-C)	---
Mass Cv (kJ/kg-C)	---
Cv (Ent. Method) (kJ/kgmole-C)	---
Mass Cv (Ent. Method) (kJ/kg-C)	---
Cp/Cv (Ent. Method)	---

* Specified by user.

Material Stream: Water-PRD (continued)

Fluid Package: Basis-1
Property Package: Peng-Robinson

PROPERTIES

		Overall				
Reid VP at 37.8 C	(psig)	---				
True VP at 37.8 C	(psig)	---				
Liq. Vol. Flow - Sum(Std. Cond)	(barrel/day)	0.0000				
HHV Molar Basis (Std)	(Btu/SCF)	46.46				
HHV Mass Basis (Std)	(kJ/kg)	2276				
CO2 Loading		---				
CO2 App ML Con	(kgmole/m3)	---				
CO2 App WT Con	(kgmol/kg)	0.0000				
Phase Fraction [Act. Vol. Basis]		0.0000				
Mass Exergy	(kJ/kg)	9.753e+006				
Viscosity Index		---				
Ideal Gas Cp/Cv		1.000				
Ideal Gas Cp	(kJ/kgmole-C)	1.170e+007				
Mass Ideal Gas Cp	(kJ/kg-C)	6.496e+005				
Bubble Point Pressure	(psig)	---				

COMPOSITION

Overall Phase

Vapour Fraction ---

COMPONENTS	MOLAR FLOW (kgmole/h)	MOLE FRACTION	MASS FLOW (tonne/d)	MASS FRACTION	LIQUID VOLUME FLOW (m3/h)	LIQUID VOLUME FRACTION
Methane	0.0000 *	0.0000 *	0.0000 *	0.0000 *	0.0000 *	0.0000 *
Ethane	0.0000 *	0.0000 *	0.0000 *	0.0000 *	0.0000 *	0.0000 *
Propane	0.0000 *	0.0000 *	0.0000 *	0.0000 *	0.0000 *	0.0000 *
i-Butane	0.0000 *	0.0000 *	0.0000 *	0.0000 *	0.0000 *	0.0000 *
n-Butane	0.0000 *	0.0000 *	0.0000 *	0.0000 *	0.0000 *	0.0000 *
i-Pentane	0.0000 *	0.0000 *	0.0000 *	0.0000 *	0.0000 *	0.0000 *
n-Pentane	0.0000 *	0.0000 *	0.0000 *	0.0000 *	0.0000 *	0.0000 *
n-Hexane	0.0000 *	0.0000 *	0.0000 *	0.0000 *	0.0000 *	0.0000 *
Nitrogen	0.0000 *	0.0000 *	0.0000 *	0.0000 *	0.0000 *	0.0000 *
CO2	0.0000 *	0.0000 *	0.0000 *	0.0000 *	0.0000 *	0.0000 *
H2S	0.0000 *	0.0000 *	0.0000 *	0.0000 *	0.0000 *	0.0000 *
H2O	106.6873 *	1.0000 *	46.1276 *	1.0000 *	1.9259 *	1.0000 *
NBP[1]95*	0.0000 *	0.0000 *	0.0000 *	0.0000 *	0.0000 *	0.0000 *
NBP[1]121*	0.0000 *	0.0000 *	0.0000 *	0.0000 *	0.0000 *	0.0000 *
NBP[1]147*	0.0000 *	0.0000 *	0.0000 *	0.0000 *	0.0000 *	0.0000 *
NBP[1]171*	0.0000 *	0.0000 *	0.0000 *	0.0000 *	0.0000 *	0.0000 *
NBP[1]195*	0.0000 *	0.0000 *	0.0000 *	0.0000 *	0.0000 *	0.0000 *
NBP[1]222*	0.0000 *	0.0000 *	0.0000 *	0.0000 *	0.0000 *	0.0000 *
NBP[1]248*	0.0000 *	0.0000 *	0.0000 *	0.0000 *	0.0000 *	0.0000 *
NBP[1]273*	0.0000 *	0.0000 *	0.0000 *	0.0000 *	0.0000 *	0.0000 *
NBP[1]299*	0.0000 *	0.0000 *	0.0000 *	0.0000 *	0.0000 *	0.0000 *
NBP[1]325*	0.0000 *	0.0000 *	0.0000 *	0.0000 *	0.0000 *	0.0000 *
NBP[1]351*	0.0000 *	0.0000 *	0.0000 *	0.0000 *	0.0000 *	0.0000 *
NBP[1]377*	0.0000 *	0.0000 *	0.0000 *	0.0000 *	0.0000 *	0.0000 *
NBP[1]402*	0.0000 *	0.0000 *	0.0000 *	0.0000 *	0.0000 *	0.0000 *
NBP[1]428*	0.0000 *	0.0000 *	0.0000 *	0.0000 *	0.0000 *	0.0000 *
NBP[1]454*	0.0000 *	0.0000 *	0.0000 *	0.0000 *	0.0000 *	0.0000 *
NBP[1]480*	0.0000 *	0.0000 *	0.0000 *	0.0000 *	0.0000 *	0.0000 *
NBP[1]505*	0.0000 *	0.0000 *	0.0000 *	0.0000 *	0.0000 *	0.0000 *
NBP[1]531*	0.0000 *	0.0000 *	0.0000 *	0.0000 *	0.0000 *	0.0000 *
NBP[1]557*	0.0000 *	0.0000 *	0.0000 *	0.0000 *	0.0000 *	0.0000 *
NBP[1]582*	0.0000 *	0.0000 *	0.0000 *	0.0000 *	0.0000 *	0.0000 *
NBP[1]608*	0.0000 *	0.0000 *	0.0000 *	0.0000 *	0.0000 *	0.0000 *
NBP[1]634*	0.0000 *	0.0000 *	0.0000 *	0.0000 *	0.0000 *	0.0000 *
NBP[1]659*	0.0000 *	0.0000 *	0.0000 *	0.0000 *	0.0000 *	0.0000 *
NBP[1]685*	0.0000 *	0.0000 *	0.0000 *	0.0000 *	0.0000 *	0.0000 *

Licensed to: PETROCHEMICAL ENGINEERIN
* Specified by user.

Material Stream: Water-PRD (continued)

Fluid Package: Basis-1
Property Package: Peng-Robinson

COMPOSITION

Overall Phase (continued)

Vapour Fraction ---

COMPONENTS	MOLAR FLOW (kgmole/h)	MOLE FRACTION	MASS FLOW (tonne/d)	MASS FRACTION	LIQUID VOLUME FLOW (m3/h)	LIQUID VOLUME FRACTION
NBP[1]711*	0.0000 *	0.0000 *	0.0000 *	0.0000 *	0.0000 *	0.0000 *
NBP[1]736*	0.0000 *	0.0000 *	0.0000 *	0.0000 *	0.0000 *	0.0000 *
NBP[1]762*	0.0000 *	0.0000 *	0.0000 *	0.0000 *	0.0000 *	0.0000 *
NBP[1]788*	0.0000 *	0.0000 *	0.0000 *	0.0000 *	0.0000 *	0.0000 *
NBP[1]825*	0.0000 *	0.0000 *	0.0000 *	0.0000 *	0.0000 *	0.0000 *
NBP[1]873*	0.0000 *	0.0000 *	0.0000 *	0.0000 *	0.0000 *	0.0000 *
NBP[1]926*	0.0000 *	0.0000 *	0.0000 *	0.0000 *	0.0000 *	0.0000 *
NBP[1]978*	0.0000 *	0.0000 *	0.0000 *	0.0000 *	0.0000 *	0.0000 *
NBP[1]1021*	0.0000 *	0.0000 *	0.0000 *	0.0000 *	0.0000 *	0.0000 *
NBP[1]1075*	0.0000 *	0.0000 *	0.0000 *	0.0000 *	0.0000 *	0.0000 *
NBP[1]1123*	0.0000 *	0.0000 *	0.0000 *	0.0000 *	0.0000 *	0.0000 *
NBP[1]1173*	0.0000 *	0.0000 *	0.0000 *	0.0000 *	0.0000 *	0.0000 *
NBP[1]1250*	0.0000 *	0.0000 *	0.0000 *	0.0000 *	0.0000 *	0.0000 *
NBP[1]1339*	0.0000 *	0.0000 *	0.0000 *	0.0000 *	0.0000 *	0.0000 *
NBP[1]1432*	0.0000 *	0.0000 *	0.0000 *	0.0000 *	0.0000 *	0.0000 *
NBP[1]1528*	0.0000 *	0.0000 *	0.0000 *	0.0000 *	0.0000 *	0.0000 *
NBP[1]1637*	0.0000 *	0.0000 *	0.0000 *	0.0000 *	0.0000 *	0.0000 *
NBP[1]1732*	0.0000 *	0.0000 *	0.0000 *	0.0000 *	0.0000 *	0.0000 *
NBP[1]1819*	0.0000 *	0.0000 *	0.0000 *	0.0000 *	0.0000 *	0.0000 *
NBP[1]1913*	0.0000 *	0.0000 *	0.0000 *	0.0000 *	0.0000 *	0.0000 *
Total	106.6873	1.0000	46.1276	1.0000	1.9259	1.0000

* Specified by user.

ANNEXURE-G

Test Separator Results

PERAC RESEARCH & DEVELOPMENT FOUNDATION

Government of Pakistan, Ministry of Energy, Petroleum Division

TEST REPORT			Page 1 of 2
Customer 's Name	M/s. Oil & Gas Development Co. Ltd (Sinjhoro Gas & Condensate Field)	**Test Report No**	000329-001
Customer's Ref	Letter - 21-08-19	**Reporting Date**	30-08-2019
Date	22-08-2019	**Sample Code**	19000264-01
Sample Description	Condensate, Sampling Point: Separator, Temperature: 85 F, Pressure: 450 Psi, Choke size: 28/64, Well Pandhi # 01, (Sinjhoro Gas Field)	**Receiving Date**	22-08-2019

TEST METHOD	PARAMETERS	TEST RESULTS
D-1298	Specific Gravity @ 60/60 °F	0.8350
D-445	Kinematic Viscosity, @ 70°F, cSt	3.66
D-445	Kinematic Viscosity; @ 100°F, cSt	2.91
D-445	Kinematic Viscosity, @ 122°F, cSt	2.51
D-4294	Sulphur Content, Wt%	0.400
D-96	B.S. & W., Vol %	0.4
D-95	Water Content, Vol.%	0.3
D-3230	Salt Content, lb/1000bbl	5
D-97	Pour Point, °C	+30
D-189	Conradson Carbon Residue (CCR), wt %	0.510
D-1267	Ried Vapor Pressure @ 37.8 °C, psi	Zero
D-473	Sediments by Extraction, Wt%	<0.01
D-482	Ash Content,Wt.%	<0.01
D-130	Copper Strip Corrosion @ 50 °C	1a
D-86	Distillation °C	-
-	I.B.P.	70
-	5/10 .% Recovery °C	100/110
-	20/30 % Recovery °C	134/172

Prepared By	Section Incharge (E)/(HC)/(ST)	Head R&ASD

The analysed based on Sample (s) provided to us by the Client. The interpretation or options expressed represent the best judgment (E. & O.E.). We have no responsiblity and warranty or represntation in connection with which such report is used.

Rev. No.0	Dated: 21-01-2000	F-10-05

7-B, Korangi Industrial Area, Adjacent NRL, Karachi-74900
Ph: +(92-21) 35121857, 35121805, 35054669-72, Fax: +(92-21) 35054745
Website: www.prdlab.com,Email: info@prdlab.com, prd@cyber.net.pk

STATE ENTERPRISE
ISO 9001:2008 CERTIFIED TÜV AUSTRIA
IAF

PERAC RESEARCH & DEVELOPMENT FOUNDATION

Government of Pakistan, Ministry of Energy, Petroleum Division

TEST REPORT

Customer 's Name	M/s. Oil & Gas Development Co. Ltd (Sinjhoro Gas & Condensate Field)	**Test Report No**	000329-001
Customer's Ref	Letter - 21-08-19	**Reporting Date**	30-08-2019
Date	22-08-2019	**Sample Code**	19000264-01
Sample Description	Condensate, Sampling Point: Separator, Temperature: 85 F, Pressure: 450 Psi, Choke size: 28/64, Well Pandhi # 01, (Sinjhoro Gas Field)	**Receiving Date**	22-08-2019

TEST METHOD	PARAMETERS		TEST RESULTS
-	40/50 % Recovery	°C	237/296
-	60/70 % Recovery	°C	352/-
-	Recovery @ 360	°C,	61%
Calculated	Barrel M/Ton		7.53
D-2892	TBP CUTS		-
-	0°C to 40 °C	(Loss)	Vol % / Wt %
-	40 °C to 155 °C	(Naphtha)	30.2 / 27.5
-	155 °C to 235 °C	(Kerosene)	12.5 / 13.2
-	235 °C to 349 °C	(HSD)	15.3 / 16.9
-	349 °C	(Residue)	42 / 42.4

Prepared By	Section Incharge (E)/(HC)/(ST)	Head R&ASD

The analysed based on Sample (s) provided to us by the Client. The interpretation or options expressed represent the best judgment (E. & O E.) We have no responsiblity and warranty or representation in connection with which such report is used.

Rev. No.0	Dated: 21-01-2000	F-10-05

7-B, Korangi Industrial Area, Adjacent NRL, Karachi-74900
Ph: +(92-21) 35121857, 35121805, 35054669-72, Fax: +(92-21) 35054745
Website: www.prdlab.com,Email: info@prdlab.com, prd@cyber.net.pk

STATE ENTERPRISE

ISO 9001:2008 CERTIFIED TÜV AUSTRIA

IAF

Well Pandhi		
PRODUCTION DATA		
3-1/2" Production String		
Date	05.08.2019	05.08.2019
CHOKE SIZES	24/64"	28/64"
WHFP (PSI)	2220	2090
WHFT (F)	105	105
Annulus Pressure (PSIG)	0	0
Separator pres. (Psi)	400	450
Separator Temp. (Deg F)	85	85
Qcond. (BCPD)	**350**	**450**
QGAS (MMSCFD)	**4.19**	**5.38**
QWATER (BWPD)	**150**	**290**
Condensate Analysis		
SG @ 60/60 f	0.831	0.825
BS & W (%)	20.00	5.00
Salt (PTB)	>100	>100
Pour Point 'C	36.00	36.00
Physical Appearance	Dark Brown	Dark Brown
API Gravity	38.78	40.01
Water Analysis		
S.G	1.060	1.066
Chlorides	54947	53157
Physical Appearance	Off-White	Off-White
pH	6.4	6.1
Gas Analysis (Mole %)		
Methane (C1)	78.1600	76.1400
Ethane (C2)	9.9430	10.2680
Propane (C3)	4.2400	5.1430
Iso-Butane (IC-4)	0.4730	0.6490
N-Butane (n-C4)	0.8530	1.2480
Iso-Pentane (IC-5)	0.1680	0.2680
N-Pentane (n-C5)	0.1860	0.3060
Hexane Plus (C6+)	0.3100	0.5010
CO2 (%)	3.4410	3.4040
N2 (%)	2.2270	2.0720
H2S (PPM)	2.0000	2.0000
BTU/SCF	1150.2600	1196.2800
Speific Gravity	0.7190	0.7469
REMARKS:		

Petrochemical Engineering Consultants

DATASHEETS

OIL & GAS DEVELOPMENT COMPANY LIMITED

0	20-Mar-20	Issued For Review	SA	AJ	AJ	
Rev	Date	Description	Initial Prepared by	Initial Checked by	Initial Approved By	Signature

PETROCHEMICAL ENGINEERING CONSULTANT
C-2, BLOCK NO. 17, GULSHAN-E-IQBAL
NEAR NATIONAL STADIUM KARACHI-75300, PAKISTAN
TEL: +92 21 34961088 & 34827780,
FAX : +92 21 34961089
E-MAIL: contact@pcec.com.pk WEBSITE : www.pcec.com.pk

DESIGN OF PANDHI TIE-IN AT SINJHORO PLANT

TITLE	PROCESS / MECHANICAL DATASHEET FOR PRESSURE CONTROL VALVE (PCV-103)		
PREPARED	CHECKED	APPROVED	REV
SA	AJ	AJ	0

DESIGN OF PANDHI TIE-IN AT SINJHORO PLANT

OIL & GAS DEVELOPMENT COMPANY LIMITED	DOCUMENT TITLE	PROCESS / MECHANICAL DATASHEET FOR PRESSURE CONTROL VALVE (PCV-103)	Petrochemical Enginnering Consultants
CLIENT	DOCUMENT NO.	0604246-PR-DS-0001 / Revision-0	CONSULTANT

GENERAL	1	Tag Number			PCV-103				
	2	Service / Location			Pandhi Separator (Blowdown valve)				
	3	Line Size			3-inch (600#)				
	4	Electric Area Classification			CL 1 ZN 2 GRP IIA				
	5	Ambient Temperature	Min.	Max.	52	°F	115	°F	
	6	Allowable Sound Pressure Level		dBA	85 @ 1 m from the Valve				
	7	Tightness Requirements			ANSI V with metal seat				
	8	Available gas supply press.	Min.	Max.	30	psi-g	150	psi-g	
	9	Fail Safe Position			Open				
	10	P&ID Drawing Number			0604246-PID-0003				
PIPE LINE	11	Line Size and Schedule	Inlet	Outlet	3-inch (600#)		3-inch (600#)		
	12	Pipe Material			CS				
	13	Pipe Insulation			None				
PROCESS CONDITION	14	Process Fluid			Gas				
	15	Upstream Condition			Gas				
	16	Differential Pressure for Actuator Sizing			1300		psi		
	17				Units	CASE - 1	CASE - 2	CASE - 3	CASE - 4
	18	Flow			MMScfd	0.6	1.2	3	
	19	Inlet Pressure			psig	1300	1300	1300	
	20	Outlet Pressure			psig	2	2	2	
	21	Inlet Temperature			ºF	131	131	131	
	22	Molecular Mass			MW	21.79	21.79	21.79	
	23	Inlet gas Compressibility factor			-	0.89	0.89	0.89	
	24	Inlet Viscosity			cP	0.013	0.013	0.013	
	25	Inlet gas Specific heat ratio				1.37	1.37	1.37	
	26	Inlet vapor pressure			psia	-	-	-	
CALCULATED RESULTS	27	Flow Co-efficient Cv			-	VTS			
	28	Travel			%	VTS			
	29	Sound Pressure Level			dBA	85			

BODY AND TRIM	30	MFR	Model	-	-	PNEUMATIC POSITIONER	56	MFR	Model	-	VTS
	31	Body Type		Globe			57	Signal : Input	Output	3-15 Psig	-
	32	Body Size	Port Size	VTS	VTS		58	Increase Signal Valve		VTS	
	33	Rated Cv	Characteristic	VTS	Equal %		59	Cam Characteristic		VTS	
	34	End Connection & Rating		RF 600#			60	Bypass	Gauges	N/R	YES
	35	Body Material		CS			61	Smart E/P Type		N/R	
	36	Bonnet Type	Material	Standard	VTS		62	Certification / IP Rating		N/R	
	37	Flow Direction		VTS		SOLENOID VALVE	63	MFR	Model	-	-
	38	Lubricator	Isolat. Valve	Required	Required		64	Type		N/R	
	39	Guiding	No. of Ports	VTS	VTS		65	When De-energizes		N/R	
	40	Trim Type		VTS			66	Certification / IP Rating / Voltage		N/R	
	41	Rate Travel		VTS		SWITCHES	67	MFR	Model	-	-
	42	Plug/Ball/Disk Material		SS			68	Type		N/R	
	43	Seat Material		SS			69	Tag Open		N/R	
	44	Cage	Stem Mater.	VTS	VTS		70	Tag Close		N/R	
	45	Gasket Material		316SS Sp. Wound			71	Certification / IP Rating / Voltage		N/R	
	46	NACE MR01-75		Not Required		INSTRUMENT GAS SET	72	MFR	Model	-	-
	47						73	Set Pressure		VTS	
	48						74	Filter	Gauges	Required	Required
ACTUATOR	49	MFR	Model	-	-	TESTS	75	HydroPressure		VTS	
	50	Type		Diaghram Operated			76	Leakage		VTS	
	51	Size	Area	VTS	VTS	PURCHASE	77	Manufacturer		Fisher/Flowserve/Masoneilan or equivalent	
	52	Fail Safe Position		Open			78	Model			
	53	Handwheel Location		N/R			79	Purchase Order Number			
	54	Bench Range		VTS			80	Price	Item Number		
	55	Stroke Time Sec's		VTS			81	Serial Number			

NOTES :

1. VTS: Vendor to Specify, VTC: Vendor to Confirm
2. Control valve to be supplied with stainless steel wire and tag with stamping of tag no. in 5mm lettering.
3. Vendor shall provide a valve conforming to the material requirements for gas service.
4. Vendor to select best suitable and Guarantee compatibility of proposed/ selected material of construction for subject service.
5. PCV will be install at separator gas outlet line to blowdown gas in to flare during high pressure surges in the system. PCV to be sized such that the system pressure can be controlled anywhere between 600 to 1250 psig.
6. Vendor to consider allowable sound pressure level (~ 85dBA) while selecting port size.
7. Material Testing certificate shall be part of scope of supply.
8. At full opening, PCV shall have minimum possible pressure drop.
9. Vendor to consider Corrosion proof painting.
10. Complete Control system to be offered complete in all respect including Control valve, pneumatic controller, interconnecting tubing etc.
11. Vendor to make sure offered system shall be suitable for saturated instrument gas available at 30-150 psig. Any gas conditioning requirement (including pressure regulator) shall be included in vendor's scope. Vendor to specify instrument gas consumption. System shall also be suitable for instrument air.

OIL & GAS DEVELOPMENT COMPANY LIMITED	DESIGN OF PANDHI TIE-IN AT SINJHORO PLANT			Petrochemical Enginnering Consultants
	DOCUMENT TITLE	PROCESS / MECHANICAL DATASHEET FOR PRESSURE CONTROL VALVE (PCV-103)		
CLIENT	DOCUMENT NO.	0604246-PR-DS-0001	Revision-0	CONSULTANT

		COMPONENTS	MOL %
	1		
	2	Methane	76.0450
	3	Ethane	10.0400
	4	Propane	4.8600
	5	i-Butane	0.5810
	6	n-Butane	1.0900
	7	i-Pentane	0.2080
	8	n-Pentane	0.2270
	9	n-Hexane	0.2800
	10	n-Heptane +	0.6000
	11	Nitrogen	2.0700
	12	Carbon dioxide	3.3500
	13	Water	0.6490
	14	Hydrogen Sulfide, ppm	2.0000
	15		
	16		
	17		
	18		
	19		
	20		
	21		
	22		
	23		
	24		
	25		
	26		
	27		
	28		
	29		
	30		
	31		
	32		
	33		
	34		
	35		
	36		
	37		
	38		
	39		
	40		
	41		
	42		
	43		
	44		
	45		
	46		
	47		
	48		
	49		
	50		
	51		
	52		
	53		
	54		
	55		
	56		
	57		
	58		
	59		
	60		
	61		
	62		

NOTES :

OIL & GAS DEVELOPMENT COMPANY LIMITED

Rev	Date	Description	Initial	Initial	Initial	Signature
			Prepared by	Checked by	Approved By	
0	20-Mar-20	Issued For Review	SA	AJ	AJ	

PETROCHEMICAL ENGINEERING CONSULTANT
C-2, BLOCK NO. 17, GULSHAN-E-IQBAL
NEAR NATIONAL STADIUM KARACHI-75300, PAKISTAN
TEL: +92 21 34961088 & 34827780,
FAX : +92 21 34961089
E-MAIL: contact@pcec.com.pk WEBSITE : www.pcec.com.pk

DESIGN OF PANDHI TIE-IN AT SINJHORO PLANT

TITLE	PROCESS / MECHANICAL DATASHEET FOR RESTRICTION ORIFICE (RO-101)		
PREPARED	CHECKED	APPROVED	REV
SA	AJ	AJ	0

DESIGN OF PANDHI TIE-IN AT SINJHORO PLAN

OIL & GAS DEVELOPMENT COMPANY LIMITED	DOCUMENT TITLE	PROCESS / MECHANICAL DATASHEET FOR RESTRICTION ORIFICE (RO-101)		Petrochemical Enginnering Consultants
CLIENT	DOCUMENT NO.	0604246-PR-DS-0002	Revision-0	CONSULTANT

APPLICABLE TO :	( ) PROPOSAL (X) PURCHASE ( ) AS BUILT		
FOR	OIL & GAS DEVELOPMENT COMPANY LIMITED	UNIT	Blowdown RO
SITE	Sinjhoro	NO. REQUIRED	1
SERVICE	Hydrocarbon	MODEL	-
MANUFACTURER	-	SERIAL NO.	-

FLUID DATA	1	Tag Number		RO-101		
	2	Service		Blowdown RO		
	3	Line Size		2-inch		
	4	Fluid State		Gas + liquid		
	5	Max. Flow	lb/hr	25831.4		
	6	Normal Flow	lb/hr	-		
	7	Min Flow	lb/hr	-		
	8	Operating Pressure	psig	0-1250		
	9	Temperature	^{O}F	131		
	10	Specific Gravity		0.7513		
	11	Comp. Factor Z (at Normal Pressure)		0.8953		
	12	CP/CV		1.374		
	13	Op. Viscosity Up Stream	cP	0.0136		
	14	Base Press (psia)	Base Temp ^{o}F	14.7	60	
	15	Design Pressure	PSIG	1350 @180°F		
METER	16	Type of meter		Not required		
	17	Diff. Pressure		Not required		
	18	Static Press. Range		Not required		
	19	Calibration Units		Not required		
	20	Beta = d/D		0.4504		
	21	Orifice Bore Diameter		0.873"		
	22	Line I.D		1.939"		
	23	Flange Rating		600#		
	24	Vent or Drain Hole		Not required		
	25	Plate Thickness		Note-1		
	26	Pipe Schedule		80		
	27	Concentric/Other		Concentric		
	28	Sq.Edged / Other		Sq. Edge		
	29	Flange Taps / Other		Not required		
	30	Flange R.F / Other		Not required		
	31	Flange Type W.N/ Other		Not required		
	32	Material		UNS S31803		
	33	Calc. Seller / Other		Seller		
	34	Item no.				

NOTES :

1	Thickness calculation to be in accordance with BS 1042 PT 1.5

CONSULTANT		DESIGN OF PANDHI TIE-IN AT SINJHORO PLANT	DOCUMENT NO.	
	PETROCHEMICAL ENGINEERING CONSULTANTS		0604246-INS-DS-0001	
			REV.	DATE.
			0	19-03-2020
CLIENT		INSTRUMENT DATA SHEET	BY	APPR.
	OIL & GAS DEVELOPMENT COMPANY LIMITED	PRESSURE GAUGE	STR	SAG
		P&ID NO. 0604246-PID-0002	SHEET	1 OF 1

GENERAL	1	Tag Number		PI-101				
	2	Service		Well Fluid				
	3	Line Size		4"				
	4	P & ID Drawing Number		0604246-PID-0002				
	5							
PROCESS CONDITION	6	Fluid		Well Fluid				
	7	Max. Pressure	Max. Temperature	1350	psi-g	200	°F	
	8	Min. Pressure	Oper. Temperature	350	psi-g	100	°F	
	9	Pulsation	Vibration	YES		YES		
	10							
	11							
GAUGE	12	Type		Direct Pressure				
	13	Calibration Range Min	Max	0	psi -g	2000	psi -g	
	14							
	15	Figure Interval		Manufacturer Standard				
	16	Minor Graduation		Yes				
	17	Mounting		Direct Mounted				
	18	Dial Size		160	mm			
	19	Dial Color		White Aluminium with Black Numerals				
	20	Case Material		304 St. Stl				
	21	Ring Construction	Ring Material	Bayonet		St. Stl		
	22	Blow-Out Protection		Yes				
	23	Lens Material		Solid Front Full Safety Pattern With Laminated Safety Glass				
	24	Pressure Eelement Type		Bourden Tube				
	25	Pressure Eelement Material		316 St. Stl				
	26	Socket Material		316 St. Stl				
	27	Connection Size		1/2" NPT-m				
	28	Connection Location		Bottom				
	29	Movement Material		St. Stl. Rack & Pinion				
	30	Nominal Accuracy		+/- 1%				
	31	Micrometer Material		Yes				
	32	Ingress Protection		IP 65				
DIAPHRAGM SEAL	33	Type		N/A				
	34	Process Connection		N/A				
	35	Diaphragm Material		N/A				
	36	Bottom Housing Material		N/A				
	37	Fill Fluid		N/A				
	38	Capillary Length		N/A				
	39	Capillary Material		N/A				
	40	Flushing Connection		No				
	41	Top Housing Material		N/A				
	42	Connection to Instrument		N/A				
	43							
OPTIONS	44	Syphon : Type	Material	N/A		N/A		
	45	Syphon : Type	Material	N/A		N/A		
	46	Movement Damping		N/A				
	47							
	48							
	49							
PURCHASE	50	Manufacturer		WIKA, ASHCROFT or Equivalent				
	51	Model						
	52	Purchase Order Number						
	53	Price	Item Number			N/A		
	54	Serial Number		N/A				

NOTES :

1. Gauge to be fitted with Blow-out back.
2. Gauge Overrange Prtection = 1.3 x Maximum range stated without incurring any damage.
3. Gauges shall supply with isolating and bleeder value.

CONSULTANT		DESIGN OF PANDHI TIE-IN AT SINJHORO PLANT	DOCUMENT NO.	
	PETROCHEMICAL ENGINEERING CONSULTANTS		0604246-INS-DS-0002	
			REV.	DATE.
			0	19-03-2020
CLIENT		INSTRUMENT DATA SHEET	BY	APPR.
	OIL & GAS DEVELOPMENT COMPANY LIMITED	PRESSURE GAUGE	STR	SAG
		P&ID NO. 0604246-PID-0002	SHEET	1 OF 1

GENERAL	1	Tag Number		PI-102				
	2	Service		Well Fluid				
	3	Line Size		4"				
	4	P & ID Drawing Number		0604246-PID-0002				
	5							
PROCESS CONDITION	6	Fluid		Well Fluid				
	7	Max. Pressure	Max. Temperature	1350	psi-g	200	°F	
	8	Min. Pressure	Oper. Temperature	350	psi-g	130	°F	
	9	Pulsation	Vibration	YES		YES		
	10							
	11							
GAUGE	12	Type		Direct Pressure				
	13	Calibration Range Min	Max	0	psi -g	2000	psi -g	
	14							
	15	Figure Interval		Manufacturer Standard				
	16	Minor Graduation		Yes				
	17	Mounting		Direct Mounted				
	18	Dial Size		160	mm			
	19	Dial Color		White Aluminium with Black Numerals				
	20	Case Material		304 St. Stl				
	21	Ring Construction	Ring Material	Bayonet		St. Stl		
	22	Blow-Out Protection		Yes				
	23	Lens Material		Solid Front Full Safety Pattern With Laminated Safety Glass				
	24	Pressure Eelement Type		Bourden Tube				
	25	Pressure Eelement Material		316 St. Stl				
	26	Socket Material		316 St. Stl				
	27	Connection Size		1/2" NPT-m				
	28	Connection Location		Bottom				
	29	Movement Material		St. Stl. Rack & Pinion				
	30	Nominal Accuracy		+/- 1%				
	31	Micrometer Material		Yes				
	32	Ingress Protection		IP 65				
DIAPHRAGM SEAL	33	Type		N/A				
	34	Process Connection		N/A				
	35	Diaphragm Material		N/A				
	36	Bottom Housing Material		N/A				
	37	Fill Fluid		N/A				
	38	Capillary Length		N/A				
	39	Capillary Material		N/A				
	40	Flushing Connection		No				
	41	Top Housing Material		N/A				
	42	Connection to Instrument		N/A				
	43							
OPTIONS	44	Syphon : Type	Material	N/A		N/A		
	45	Syphon : Type	Material	N/A		N/A		
	46	Movement Damping		N/A				
	47							
	48							
	49							
PURCHASE	50	Manufacturer		WIKA, ASHCROFT or Equivalent				
	51	Model						
	52	Purchase Order Number						
	53	Price	Item Number			N/A		
	54	Serial Number		N/A				

NOTES :

1. Gauge to be fitted with Blow-out back.
2. Gauge Overrange Protection = 1.3 x Maximum range stated without incurring any damage.
3. Gauges shall supply with isolating and bleeder value.

CONSULTANT		DESIGN OF PANDHI TIE-IN AT SINJHORO PLANT	DOCUMENT NO.	
	PETROCHEMICAL ENGINEERING CONSULTANTS		0604246-INS-DS-0003	
			REV.	DATE.
			0	19-03-2020
CLIENT		INSTRUMENT DATA SHEET	BY	APPR.
	OIL & GAS DEVELOPMENT COMPANY LIMITED	THERMOMETER	STR	SAG
		P&ID NO. 0604246-PID-0002	SHEET	1 OF 1

GENERAL	1	Tag Number		TI-101			
	2	Service		Well Fluid			
	3	Line Size		4"			
	4	Area Classification		Zone 2			
	5	P & ID Drawing Number		0604246-PID-0002			
	6						
PROCESS CONDITIONS	7	Fluid		Well Fluid			
	8	Oper. Temperature	Max. Temperature	100	°F	200	°F
	9	Min. Pressure	Max. Pressure	350	psi-g	1350	psi-g
	10						
	11						
	12						
THERMOMETER	13	Type		Indicator			
	14	Calibration Range Min	Max	0	°F	500	^{0}F
	15	Dial Size	Dial Color	160	mm	WHITE WITH BLACK PRINTING	
	16	Case Material		304 ST.ST.			
	17	Hermetically Sealed Case		NO			
	18	Stem Type		BI-METALLIC			
	19	Stem Material		St. Stl			
	20	Stem or Union Thread		Union Thread			
	21	Stem Position		ANY ANGLE			
	22	Stem Length	Stem Diameter	TO SUIT WELL mm		8	mm
	23	External Calibrator		MICRO POINTER			
	24						
	25						
	26	Ingress Protection		IP-65			
	27	FILLED	Type	Not Required			
	28		Compensation	N/A			
	29		Capillary Legth	N/A			
	30		Capillary Material	N/A			
	31		Armor Material	N/A			
	32	SYSTEM	Bulb Diameter	N/A			
	33		Bulb Length	N/A			
	34		Bulb Type	N/A			
	35		Bulb Connection	N/A			
	36						
WELL	37	Process Connection		2" FLANGED 150#			
	38	Material		316L ST.ST			
	39	Sheating	Coating	N/A		N/A	
	40	Construction Type		DRILLED BARSTOCK (TAPERED) WELDED FLANGE			
	41	Internal Connection		1/2" NPT-F			
	42	Length Below Thread / Flanged		U = 305	mm		
	43	Lagging Extension		T = VTA	mm		
	44	Plug & Chain		NO			
	45	Overall Length		VTA	mm		
	46	Treatments	Finish	100 % DYE PENETRALL WELDS		FLANGE = RF (125AARH)	
	47	Stamping		YES			
	48	Union		1/2 " NPT-M ST.ST			
	49	Wetted Part Materials in Accordance With					
PURCHASE	50	Manufacturer					
	51	Model					
	52	Purchase Order Number					
	53	Price	Item Number			N/A	
	54	Serial Number		N/A			

NOTES :

CONSULTANT		DESIGN OF PANDHI TIE-IN AT SINJHORO PLANT	DOCUMENT NO.	
PETROCHEMICAL ENGINEERING CONSULTANTS			0604246-INS-DS-0004	
			REV.	DATE.
			0	19-03-2020
CLIENT		INSTRUMENT DATA SHEET	BY	APPR.
OIL & GAS DEVELOPMENT COMPANY LIMITED		THERMOMETER	STR	SAG
		P&ID NO. 0604246-PID-0002	SHEET	1 OF 1

GENERAL	1	Tag Number		TI-102			
	2	Service		Well Fluid			
	3	Line Size		4"			
	4	Area Classification		ZONE 2			
	5	P & ID Drawing Number		0604246-PID-0002			
	6						
PROCESS CONDITIONS	7	Fluid		Well Fluid			
	8	Oper. Temperature	Max. Temperature	140	°F	200	°F
	9	Min. Pressure	Max. Pressure	350	psi-g	1350	psi-g
	10						
	11						
	12						
THERMOMETER	13	Type		Indicator			
	14	Calibration Range Min	Max	0	°F	500	^{0}F
	15	Dial Size	Dial Color	150	mm	WHITE WITH BLACK PRINTING	
	16	Case Material		304 ST.ST.			
	17	Hermetically Sealed Case		NO			
	18	Stem Type		BI-METALLIC			
	19	Stem Material		St. Stl			
	20	Stem or Union Thread		Union Thread			
	21	Stem Position		ANY ANGLE			
	22	Stem Length	Stem Diameter	TO SUIT WELL mm		8	mm
	23	External Calibrator		MICRO POINTER			
	24						
	25						
	26	Ingress Protection		IP-65			
	27	FILLED	Type	Not Required			
	28		Compensation	N/A			
	29		Capillary Legth	N/A			
	30		Capillary Material	N/A			
	31		Armor Material	N/A			
	32	SYSTEM	Bulb Diameter	N/A			
	33		Bulb Length	N/A			
	34		Bulb Type	N/A			
	35		Bulb Connection	N/A			
	36						
WELL	37	Process Connection		2" FLANGED 150#			
	38	Material		316L ST.ST			
	39	Sheating	Coating	N/A		N/A	
	40	Construction Type		DRILLED BARSTOCK (TAPERED) WELDED FLANGE			
	41	Internal Connection		1/2" NPT-F			
	42	Length Below Thread / Flanged		U = 305	mm		
	43	Lagging Extension		T = VTA	mm		
	44	Plug & Chain		NO			
	45	Overall Length		VTA	mm		
	46	Treatments	Finish	100 % DYE PENETRALL WELDS		FLANGE = RF (125AARH)	
	47	Stamping		YES			
	48	Union		1/2 " NPT-M ST.ST			
	49	Wetted Part Materials in Accordance With					
PURCHASE	50	Manufacturer					
	51	Model					
	52	Purchase Order Number					
	53	Price	Item Number			N/A	
	54	Serial Number		N/A			

NOTES :

Petrochemical Engineering Consultants

PIPING & INSTRUMENTATION DIAGRAM

ROTARY EQUIPMENT

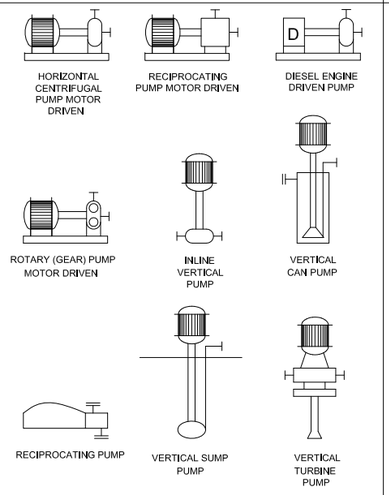

TANKS AND VESSELS

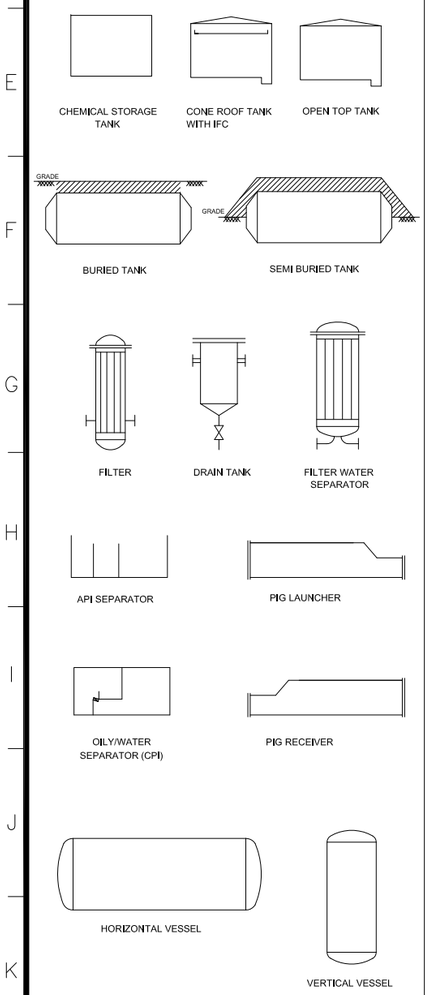

PIPING AND INSTRUMENTATION SYMBOLS

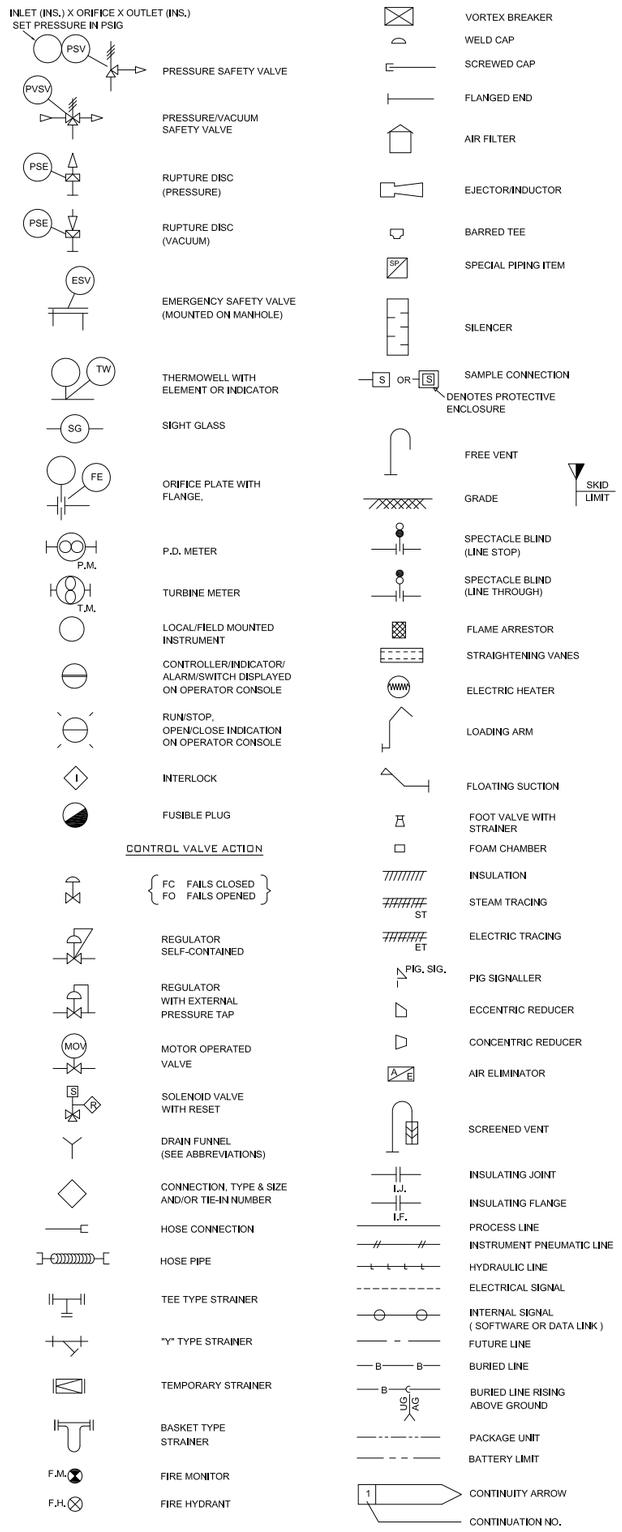

PIPING AND INSTRUMENTATION SYMBOLS

FLOW DIAGRAM IDENTIFICATION LETTERS

LETTER	FIRST LETTER	SUBSEQUENT LETTER
A	ANALYSIS	ALARM
B	BURNER FLAME	BLOCK/BYPASS
C	CONDUCTIVITY (ELECTRICAL)	CONTROLLER/CLOSED
D	DENSITY (SP. GR.)	DIFFERENTIAL
E	VOLTAGE (EMF/ELECTRICAL)	ELEMENT (PRIMARY)
F	FLOW	RATIO (FRACTION)
G	GAUGING (DIMENSIONAL)	GLASS/GAUGE
H	HAND ACTUATED (MANUAL)	HIGH
I	CURRENT (AMPS)	INDICATOR
J	POWER (WATTS)	MILTIPOINT (SCAN)
K	TIME	CONTROL STATION
L	LEVEL	LIGHT/LOW
M	MOISTURE (HUMIDITY)	MIDDLE
N	(UNCLASSIFIED)	(UNCLASSIFIED)
O	(UNCLASSIFIED)	ORIFICE/OPEN
P	PRESSURE/VACUUM	POINT
Q	QUANTITY/NUMBER	TOTALIZER/INTEGRATER
R	RUN/RESTRICTION	RECORDER
S	SPEED/FREQUENCY	SAFETY/SWITCH
T	TEMPERATURE	TRANSMITTER
U	MULTIVARIABLE	MALFUNCTION
V	VIBRATION/VISCOSITY	VALVE
W	WEIGHT/FORCE	WELL/PROBE
X	(UNCLASSIFIED)	UNCLASSIFIED
Y	(UNCLASSIFIED)	RELAY
Z	POSITION	DRIVE/ACTUATE

VENT AND DRAIN DETAILS

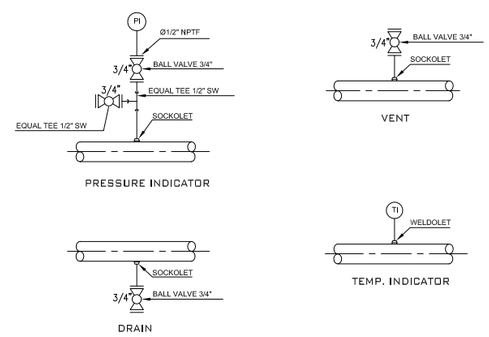

HEADER SIZE	DRAIN SIZE	VENT SIZE
3/4"–4"	3/4"	3/4"
6"–10"	3/4"	3/4"
12"–ABOVE	1 1/2"	3/4"

PIPING ABBREVATIONS

AG	- ABOVE GROUND
ATM	- ATMOSPHERE
BF	- BLIND FLANGE
BL	- BATTERY LIMIT
CO	- CHAIN OPERATED
CSC	- CAR SEAL CLOSED
CSO	- CAR SEAL OPEN
DR	- DRAIN
DPI	- DIFFERENTIAL PRESSURE INDICATOR
FB	- FULL BORE
FC	- FAIL CLOSED
FO	- FAIL OPEN
FOB	- FLAT ON BOTTOM
FOT	- FLAT ON TOP
GOV	- GEAR OPERATED VALVE
HP	- HORSE POWER OR HIGH PRESSURE
IFC	- INTERNAL FLOATING COVER
F/W	- FILTER WATER
IJ	- INSULATING JOINT
HC	- HOSE CONNECTION/ HALF COUPLING HEAT CONSERVATION
OWS	- OILY WATER SEWER
UC	- UTILITY CONNECTION
LC	- LOCKED CLOSE
LO	- LOCKED OPEN
LOR	- LOCAL-OFF-REMOTE
LP	- LOW PRESSURE
MOV	- MOTOR OPERATED VALVE
NC	- NORMALLY CLOSED
NO	- NORMALLY OPEN
PP	- PERSONNEL PROTEXCTION
SC	- SAMPLE CONNECTION
S-S	- SEAM TO SEAM
SWS	- STORM WATER SEWER
TIP	- TIE-IN POINT
T-T	- TANGENT TO TANGENT
UG	- UNDERGROUND
V	- VENT
VB	- VORTEX BREAKER
RW	- RAW WATER
P	- PLUGGED
RO	- RESTRICTION ORIFICE
TS	- TEMPORARY STRAINER
TYP	- TYPICAL
ESD	- EMERGENCY SHUT DOWN

LINE NUMBER IDENTIFICATION

6"- P - 001- A1

LINE SIZE (INS.)
SERVICE SYMBOL (THREE LETTER MAX.)
LINE NO.
MATERIAL SPECIFICATION (AS PER PIPING SPEC.)

DRAIN SYSTEM	
CLOSED DRAIN	CD
OILY WATER SEWER	OWS
RECOVERED OIL	RO
GAS SYSTEMS	
FUEL GAS	FG
VENT	V
FLARE	FL
UTILITY GAS	UG
SPECIAL LIQUIDS	
FOAM SOLUTION	FS
FOAM CONCENTRATE	FC
CHEMICAL INJECTION	CI
METHANOL	ME
PROCESS SERVICE	
WELL FLUID	GP
PROCESS LIQUID	PL
PROCESS GAS	PG
WATER SYSTEMS	
FIRE WATER	FW
WASTE WATER	WW
RAW WATER	RW

MATERIAL SPECIFICATION

A1 - 150#
B1 - 300#
C1 - 600#
D1 -900#

EQUIPMENT NUMBER IDENTIFICATION

B= BOILER
E= HEAT EXCHANGER
F= FILTER
G= GENERATOR
J= EDUCTOR, INDUCTOR
M= MOTOR
P= PUMP (CENTRIFUGAL, ROTARY)
S= SEPARATOR
T= ATMOSPHERIC TANK
V= VESSEL
LA= LOADING ARM
MT= METER
PU= PACKAGE UNIT
WCB= WELLHEAD CONTROL PANEL

T 001

EQUIPMENT SYMBOL
EQUIPMENT NO.

INSTRUMENT NUMBER IDENTIFICATION

PI 001

VARIABLE TYPE
SEQUENCE NUMBER

REV.	DATE	DESCRIPTION OF REVISION	PREP'D:	CHECK	APPR.
0	13-03-2020	ISSUED FOR REVIEW	M.A	SA	

PETROCHEMICAL ENGINEERING CONSULTANTS
C-2, BLOCK NO. 17, GULSHAN-E-IQBAL, NEAR NATIONAL STADIUM, KARACHI-75300. PAKISTAN.
TEL. +92 (21) 34827780, 34961088, FAX: +92 21 34961089, E-Mail: contact@pcec.com.pk web site: www.pcec.com.pk

CLIENT : OIL & GAS DEVELOPMENT COMPANY LTD.

PROJECT : DESIGN OF PANDHI TIE-IN AT SINJHORO PLANT

TITLE : PIPING & INSTRUMENTATION DIAGRAM GENERAL LEGEND

JOB NO	DRAWING NO	SHEET NO	SCALE	SHEET SIZE	REV
0604246	0604246-PR-PID-0000	1 OF 1	N.T.S.	A3	0

THIS DRAWING AND DESIGN IS THE PROPERTY OF PETROCHEMICAL AND MUST NOT BE COPIED OR PASSED TO ANY THIRD PARTY WITHOUT WRITTEN CONSENT FROM THE PETROCHEMICAL ENGINEERING CONSULTANTS

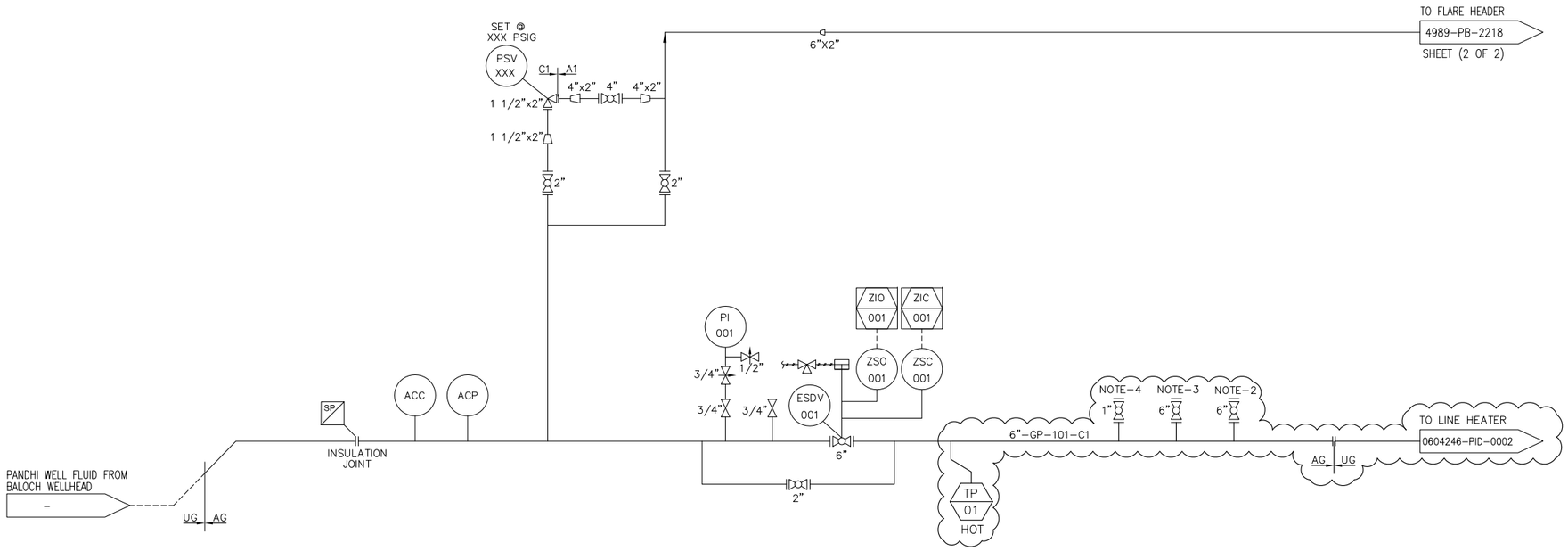

NOTES

1. FOR GENERAL NOTES, SYMBOLS & LEGEND REFER DWG# 0604246-PR-PD-0000.
2. PROVISION FOR TEST SEPARATOR.
3. PROVISION FOR FUTURE CONNECTION.
4. PROVISION FOR POUR POINT DEPRESSANT INJECTION.

LEGEND:

PROPOSED WORK:

REV.	DATE	DESCRIPTION OF REVISION	PREP'D:	CHECK	APPR.
0	13/03/2020	ISSUED FOR REVIEW	M.A	SA	

PETROCHEMICAL ENGINEERING CONSULTANTS
C-2, BLOCK NO. 17, GULSHAN-E-IQBAL, NEAR NATIONAL STADIUM, KARACHI-75300. PAKISTAN.
TEL. +92 (21) 34827780, 34961088, FAX: +92 21 34961089, E-Mail: contact@pcec.com.pk web site: www.pcec.com.pk

CLIENT : OIL & GAS DEVELOPMENT COMPANY LIMITED

PROJECT : DESIGN OF PANDHI TIE-IN AT SINJHORO PLANT

TITLE : PIPING & INSTRUMENTATION DIAGRAM FOR MANIFOLD

JOB NO	DRAWING NO	SHEET NO	SCALE	SHEET SIZE	REV
0604246	0604246-PID-0001	1 OF 1	N.T.S.	A3	0

THIS DRAWING AND DESIGN IS THE PROPERTY OF PETROCHEMICAL AND MUST NOT BE COPIED OR PASSED TO ANY THIRD PARTY WITHOUT WRITTEN CONSENT FROM THE PETROCHEMICAL ENGINEERING CONSULTANTS

H-001
LINE HEATER

DESIGN PRESSURE: 1415 PSIG

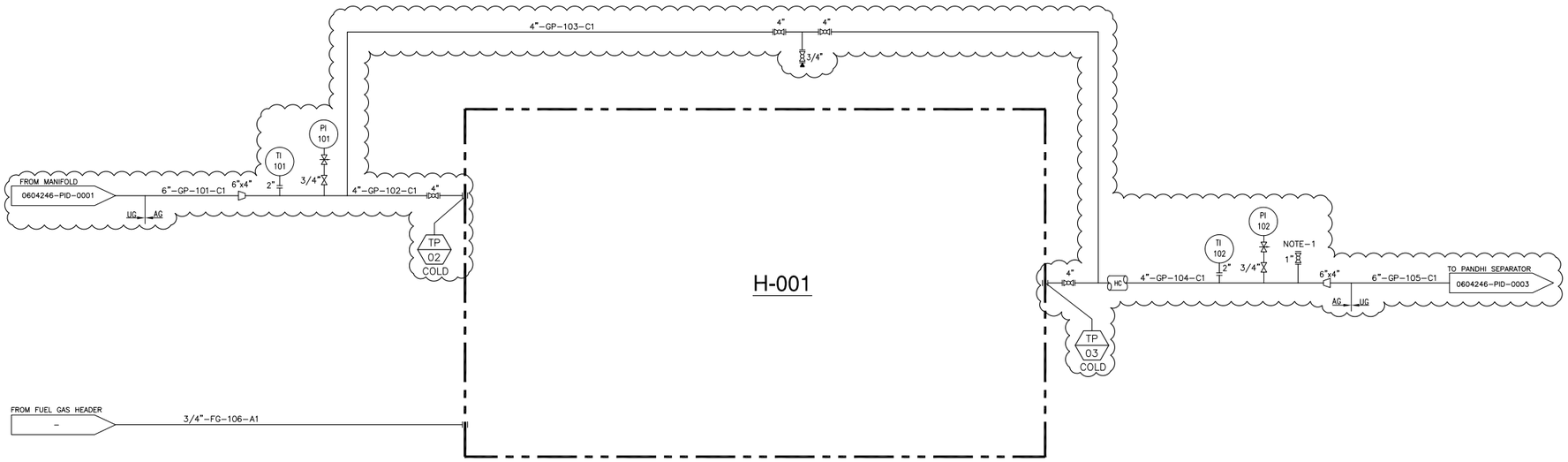

NOTE

1. PROVISION FOR POUR POINT DEPRESSANT INJECTION.

LEGEND:

PROPOSED WORK:

REV.	DATE	DESCRIPTION OF REVISION	PREP'D:	CHECK	APPR.
0	13/03/2020	ISSUED FOR REVIEW	M.A	SA	

PETROCHEMICAL ENGINEERING CONSULTANTS
C-2, BLOCK NO. 17, GULSHAN-E-IQBAL, NEAR NATIONAL STADIUM, KARACHI-75300. PAKISTAN.
TEL. +92 (21) 34827780, 34961088, FAX: +92 21 34961089, E-Mail: contact@pcec.com.pk web site: www.pcec.com.pk

CLIENT : OIL & GAS DEVELOPMENT COMPANY LIMITED

PROJECT : DESIGN OF PANDHI TIE-IN AT SINJHORO PLANT

TITLE : PIPING & INSTRUMENTATION DIAGRAM FOR WATER BATH HEATER

JOB NO	DRAWING NO	SHEET NO	SCALE	SHEET SIZE	REV
0604246	0604246-PID-0002	1 OF 1	N.T.S.	A3	0

THIS DRAWING AND DESIGN IS THE PROPERTY OF PETROCHEMICAL AND MUST NOT BE COPIED OR PASSED TO ANY THIRD PARTY WITHOUT WRITTEN CONSENT FROM THE PETROCHEMICAL ENGINEERING CONSULTANTS

THREE PHASE SEPARATORS (SOUR SERVICE)

V-107
THREE PHASE SEPARATOR

DIA x LENGTH	: (1524mm I.D x 6200mm (SxS))
DESIGN PRESSURE	: 1350 PSIG
DESIGN TEMPERATURE	: 180°F
OPERATING PRESSURE	: 660 PSIG
GAS FLOW	: 40 MMSCFD
OIL FLOW	: 3000 BPD
WATER FLOW	: 500 BPD
CORROSION ALLOWANCE	: 0.125 INCH
SERVICE	: SOUR
PRESSURE CLASS	: 600#
SHELL WALL THICKNESS	: 60 mm

S-105
INSTRUMENT GAS SCRUBBER/FILTER

DIA x LENGTH	: (168mm O.D x 1143mm (SxS))
DESIGN PRESSURE	: 165.3 PSIG
DESIGN TEMPERATURE	: 180 1.4 °F
SERVICE	: SOUR

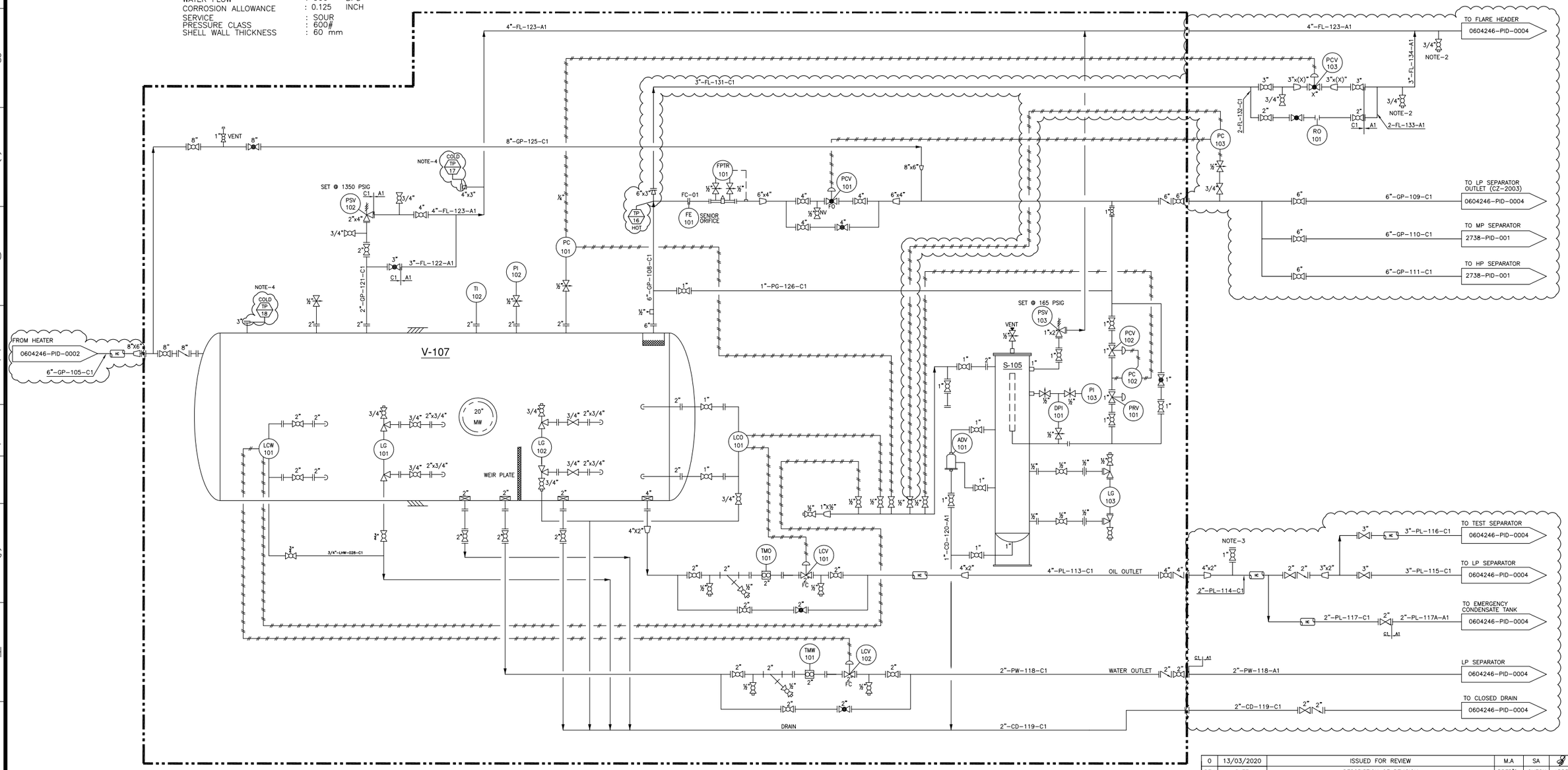

LEGEND:
PROPOSED WORK:

NOTES:

1. FOR INSTRUMENT SYMBOLS & ABBREVIATIONS REFER DRAWING. NO. 0604246-PID-0000.
2. DRAIN TO LOCATED AT LOWEST POINT.
3. PROVISION FOR POUR POINT DEPRESSANT INJECTION.
4. TO BE BLINDED.

REV.	DATE	DESCRIPTION OF REVISION	PREP'D:	CHECK	APPR.
0	13/03/2020	ISSUED FOR REVIEW	M.A	SA	

PETROCHEMICAL ENGINEERING CONSULTANTS
C-2, BLOCK NO. 17, GULSHAN-E-IQBAL, NEAR NATIONAL STADIUM, KARACHI-75300. PAKISTAN.
TEL. +92 (21) 34827780, 34961088, FAX: +92 21 34961089, E-Mail: contact@pcec.com.pk web site: www.pcec.com.pk

CLIENT : OIL & GAS DEVELOPMENT COMPANY LIMITED

PROJECT : DESIGN OF PANDHI TIE-IN AT SINJHORO PLANT

TITLE : PIPING & INSTRUMENTATION DIAGRAM FOR THREE PHASE SEPARATOR

JOB NO	DRAWING NO	SHEET NO	SCALE	SHEET SIZE	REV
0604246	0604246-PID-0003	1 OF 1	N.T.S.	A3	0

THIS DRAWING AND DESIGN IS THE PROPERTY OF PETROCHEMICAL AND MUST NOT BE COPIED OR PASSED TO ANY THIRD PARTY WITHOUT WRITTEN CONSENT FROM THE PETROCHEMICAL ENGINEERING CONSULTANTS

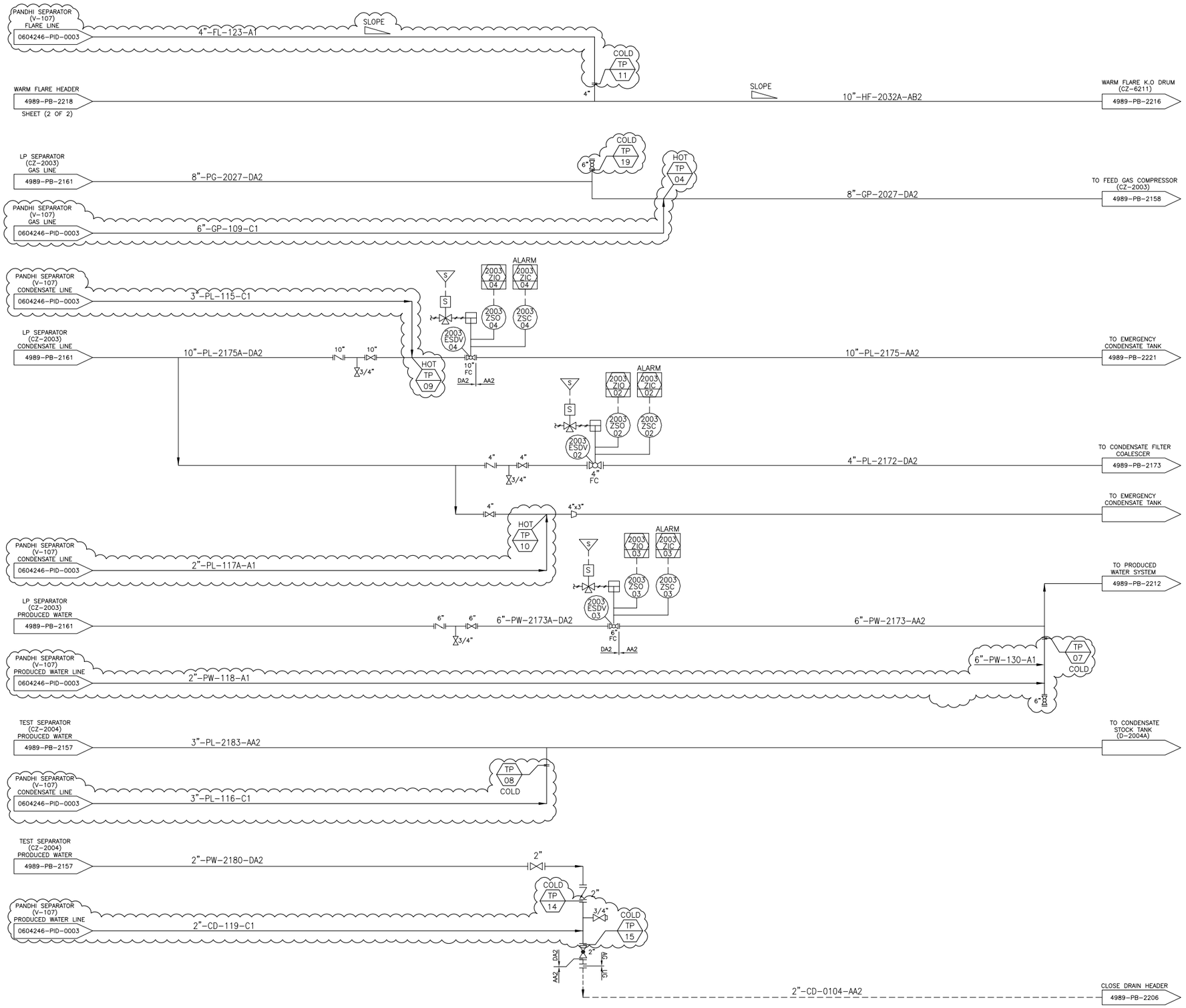

NOTE:

LEGEND:

PROPOSED WORK:

REV.	DATE	DESCRIPTION OF REVISION	PREP'D:	CHECK	APPR.
0	13/03/2020	ISSUED FOR REVIEW	M.A	SA	

PETROCHEMICAL ENGINEERING CONSULTANTS
C-2, BLOCK NO. 17, GULSHAN-E-IQBAL, NEAR NATIONAL STADIUM, KARACHI-75300. PAKISTAN.
TEL. +92 (21) 34827780, 34961088, FAX: +92 21 34961089, E-Mail: contact@pcec.com.pk web site: www.pcec.com.pk

CLIENT : OIL & GAS DEVELOPMENT COMPANY LIMITED

PROJECT : DESIGN OF PANDHI TIE-IN AT SINJHORO PLANT

TITLE : PIPING & INSTRUMENTATION DIAGRAM FOR TIE-IN POINTS

JOB NO	DRAWING NO	SHEET NO	SCALE	SHEET SIZE	REV
0604246	0604246-PR-PID-0004	1 OF 1	N.T.S.	A3	0

THIS DRAWING AND DESIGN IS THE PROPERTY OF PETROCHEMICAL AND MUST NOT BE COPIED OR PASSED TO ANY THIRD PARTY WITHOUT WRITTEN CONSENT FROM THE PETROCHEMICAL ENGINEERING CONSULTANTS

V-101
SEPARATOR VESSEL (U-STAMP)

SIZE	: (60" I.D x 20' (SxS))
DESIGN PRESSURE	: 2200 PSIG
DESIGN TEMPERATURE	: 180°F
GAS CAPACITY	: 40 MMSCFD

THREE PHASE SEPARATORS (SOUR SERVICE)

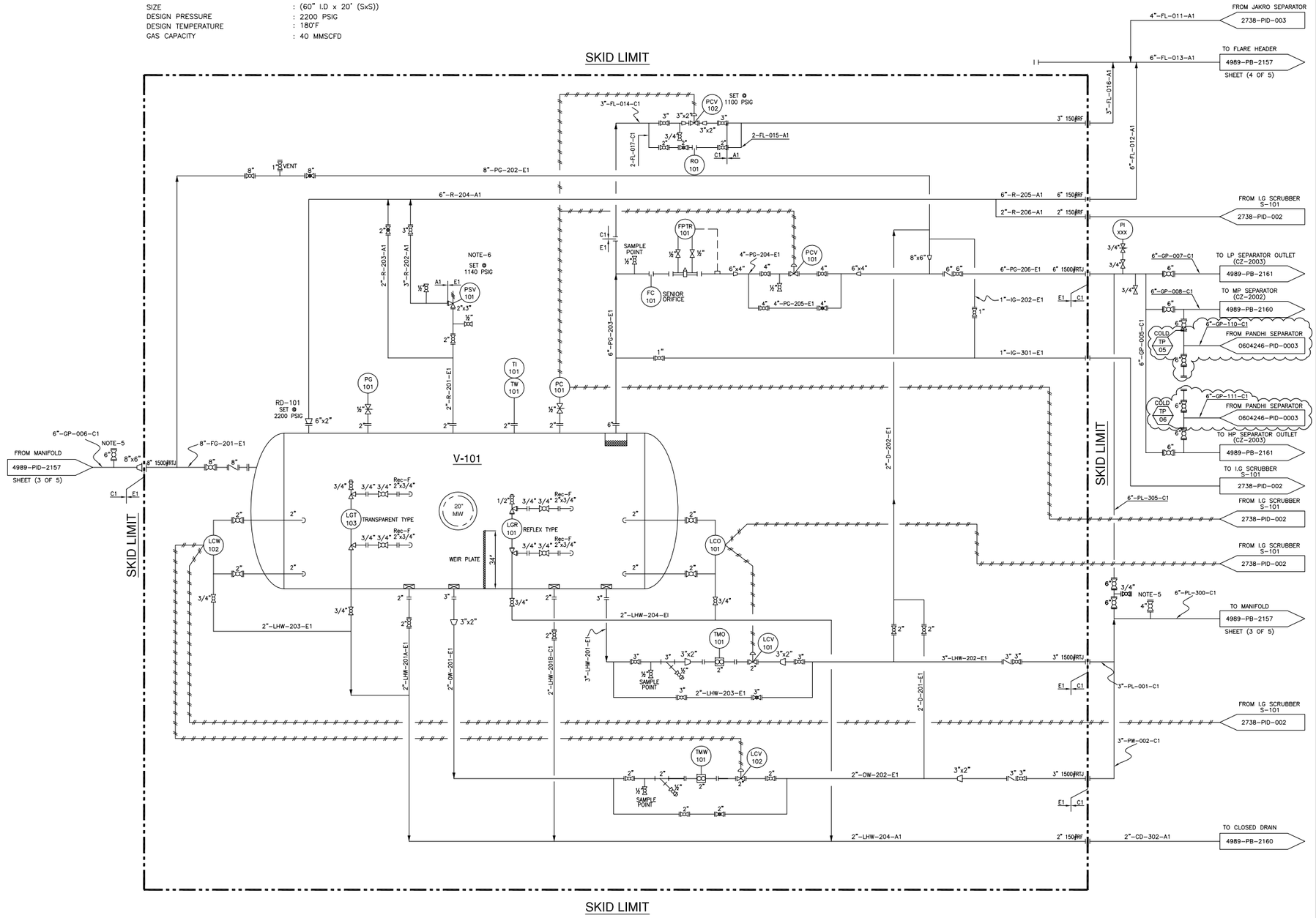

NOTE:

1. FOR INSTRUMENT SYMBOLS & ABBREVIATIONS REFER DRAWING. NO. 2738-PID-000.
2. ALL MATERIALS SHOULD COMPLY WITH SECTION VIII DIVISION SUB SECTION AND UCS OFF SUB SECTION C.
3. SHELL AND PIPES SHOULD BE STRESS RELIEVED.
4. VESSEL SHOULD BE U STAMPED.
5. PROVISION FOR FUTURE CONNECTION.
6. PRESSURE SETTING NEEDED TO BE CHANGED AS PER BALOCH FLOWLINE.

LEGEND:

PROPOSED WORK:

REV.	DATE	DESCRIPTION OF REVISION	PREP'D:	CHECK	APPR.
0	13/03/2020	ISSUED FOR REVIEW	M.A	SA	
B	30/11/2018	RE-ISSUED FOR CONSTRUCTION	M.A	SOH	

PETROCHEMICAL ENGINEERING CONSULTANTS
C-2, BLOCK NO. 17, GULSHAN-E-IQBAL, NEAR NATIONAL STADIUM, KARACHI-75300. PAKISTAN.
TEL. +92 (21) 34827780, 34961088, FAX: +92 21 34961089, E-Mail: contact@pcec.com.pk web site: www.pcec.com.pk

CLIENT : OIL & GAS DEVELOPMENT COMPANY LIMITED

PROJECT : TIE-IN OF BITRISM AND GUNDANWARI AT SINJHORO PLANT

TITLE : PIPING & INSTRUMENTATION DIAGRAM FOR HP SEPARATOR (V-101)

JOB NO	DRAWING NO	SHEET NO	SCALE	SHEET SIZE	REV
2738	2738-PID-001	1 OF 1	N.T.S.	A3	0

THIS DRAWING AND DESIGN IS THE PROPERTY OF PETROCHEMICAL AND MUST NOT BE COPIED OR PASSED TO ANY THIRD PARTY WITHOUT WRITTEN CONSENT FROM THE PETROCHEMICAL ENGINEERING CONSULTANTS

OIL & GAS DEVELOPMENT COMPANY LIMITED

0604246 – DESIGN OF PANDHI TIE-IN AT SINJHORO PLANT

(MECHANICAL PACKAGE)

CONSULTANTS: **MARCH, 2020**

Petrochemical Engineering Consultants
C-2, Block No. 17, Gulshan-E-Iqbal, Karachi-75300, Pakistan.
Telephones: +92 (21) 34827780, 34961088, Fax: +92 (21) 34961089
E-Mail: contact@pcec.com.pk web: www.pcec.com.pk

Disclaimer

This report has been prepared on behalf of (OGDCL) OIL & GAS DEVELOPMENT COMPANY LIMITED and for the exclusive use of (OGDCL) OIL & GAS DEVELOPMENT COMPANY LIMITED and is subject to and issued in accordance with the agreement between Petrochemical Engineering Consultants (PEC) and OGDCL. PEC accept no liability or responsibility whatsoever for it in respect of any use of or reliance upon this report by any third party.

Copying this report without the permission of Petrochemical Engineering Consultants is not permitted.

REV	DESCRIPTION	ORIG	REVIEW	PEC APPROVAL	DATE	CLIENT APPROVAL	DATE
0	Issued for Review	NAJEEB	SAR	Adeel	MARCH,21, 2020		

CONTENTS

CONTENTS

SECTION NO.	DESCRIPTION
1.0	BILL OF QUANTITIES
2.0	PIPING SPECIFICATIONS
3.0	DRAWINGS LIST
4.0	DRAWINGS
4.1	EQUIPMENT LAYOUT
4.2	PLOT PLAN
4.3	PIPING LAYOUT
4.4	ISOMETRICS

BILL OF QUANTITIES

OIL & GAS DEVELOPMENT COMPANY LIMITED

DESIGN OF PANDHI TIE-IN AT SINJHORO PLANT

BILL OF QUANTITIES FOR PROCUREMENT

DOC. NO. : 0604246-BOQ-001
PREP. : SAR
REV. : 0
DATE : 17-03-2020

SR #	ITEM DESCRIPTION	UNIT	SPEC	TOTAL Qty.	UNIT RATES (Pak. Rs)	TOTAL (Pak. Rs.)	REMARKS
1.0	**PIPE:**						
1.1	Pipe,Seamless, Single Random Length, ASTM A-106 Gr. B / API 5L Gr. B, as per ASME B 36.10						
i	Dia. 6" Sch. 80 (B.E)	m	C1	150			
ii	Dia. 6" Sch. 40 (B.E)	m	A1	1			
iii	Dia. 4" Sch. 40 (B.E)	m	A1	75			
iv	Dia. 4" Sch. 80 (B.E)	m	C1	10			
v	Dia. 3" Sch. 80 (B.E)	m	C1/A1	25			
vi	Dia. 2" Sch. 160 (P.E)	m	C1	95			
vii	Dia. 2" Sch. 80 (B.E)	m	A1	1.5			
viii	Dia. 1" Sch. 160 (P.E)	m	C1	1.5			
ix	Dia. 3/4" Sch. 160 (P.E)	m	C1	1.5			
x	Dia. 3/4" Sch. 80 (P.E)	m	A1	10			
2.0	**ELBOWS:**						
2.1	Elbow 90° , Long Radius, B.W, ASTM A-234 Gr. WPB as per ASME B16.9						
i	Dia. 6" Sch. 80	Nos.	C1	20			
ii	Dia. 4" Sch. 40	Nos.	A1	10			
iii	Dia. 4" Sch. 80	Nos.	C1	6			
iv	Dia. 3" Sch. 80	Nos.	C1/A1	7			
v	Dia. 2" Sch. 160	Nos.	C1	13			
vi	Dia. 2" Sch. 80	Nos.	A1	11			
2.2	Elbow 45° , Long Radius, B.W, ASTM A-234 Gr. WPB as per ASME B16.9						
i	Dia. 6" Sch. 80	Nos.	C1	7			
ii	Dia. 2" Sch. 80	Nos.	A1	2			
2.3	Elbow 90°, S.W ,3000# , ASTM A-105, as per ASME B16.11						
i	Dia. 3/4"	Nos.	A1	2			
3.0	**EQUAL TEE:**						
3.1	Equal Tee. B.W, ASTM A-234 Gr. WPB as per ASME B16.9						
i	Dia. 6" Sch. 80	Nos.	C1	6			
ii	Dia. 4" Sch. 80	Nos.	C1	2			
iii	Dia. 2" Sch. 160	Nos.	C1	2			
4.0	**REDUCING TEE:**						
4.1	Reducing Tee. B.W, ASTM A-234 Gr. WPB as per ASME B16.9						
i	Dia. 6" x 3" Sch 80	No.	C1	1			
ii	Dia. 4" x 3" Sch 40	No.	A1	1			
iii	Dia. 8" x 6" Sch 80	No.	C1	1			
iv	Dia. 4" x 2" Sch 80	No.	A1	1			
v	Dia. 4" x 2" Sch 80 x 160	Nos.	C1	3			
vi	Dia. 3" x 2" Sch 80 x 160	Nos.	C1	2			
vii	Dia. 3" x 2" Sch 80	No.	A1	1			
vii	Dia. 3" x X" Sch 80 x 160	No.	A1	2			
5.0	**REDUCER :**						
5.1	Conc. Reducer, B.W, ASTM A-234 Gr. WPB as per ASME B16.9						
i	Dia. 3" x 2" Sch 80 x 160	Nos.	C1	2			
ii	Dia. 8" x 6" Sch.80	No.	C1	1			
iii	Dia. 6" x 4" Sch.80	Nos.	C1	3			
iv	Dia. 4" x 2" Sch 80 x 160	No.	C1	1			

OIL & GAS DEVELOPMENT COMPANY LIMITED

DESIGN OF PANDHI TIE-IN AT SINJHORO PLANT

BILL OF QUANTITIES FOR PROCUREMENT

DOC. NO. : 0604246-BOQ-001
PREP. : SAR
REV. : 0
DATE : 17-03-2020

SR #	ITEM DESCRIPTION	UNIT	SPEC	TOTAL Qty.	UNIT RATES (Pak. Rs)	TOTAL (Pak. Rs.)	REMARKS
6.0	**WELDOLET:**						
6.1	Weldolet, BW, Material: ASTM A-105						
i	Dia. 10" x 2" Sch 80	No.	C1	1			
ii	Dia. 6" x 2" Sch 40 x 80	No.	A1	1			
7.0	**SOCKOLET:**						
7.1	Sockolet S.W. 3000# as per ASME B 16.11 Material: ASTM A-105						
i	Dia. 4" x 1"	No.	C1	1			
ii	Dia. 6" x 1"	No.	C1	1			
iii	Dia. 4" x 3/4"	No.	A1	1			
iv	Dia. 4" x 3/4"	Nos.	C1	3			
v	Dia. 6" x 3/4"	No.	C1	1			
vi	Dia. 2" x 1"	No.	C1	1			
vii	Dia. 2" x 3/4"	No.	C1	1			
viii	Dia. 3" x 3/4"	No.	C1	1			
8.0	**BALL VALVE:**						
8.1	Ball Valve RTJ 600#,Bolted Body, Replaceable Ball & Seats, Reduced Port, floating ball, Standard Lever Operated. as per ASME B-16.5 Body material A-216 Gr. WCB Stem/Ball material A 351 CF8M, Seal PTFE, .As per API 6D Fire Safe, Antistatic. Tag. No. (VB-105)						
i	Dia. 8"	Nos.	C1	1			
ii	Dia. 4"	Nos.	C1	4			
iii	Dia. 3"	Nos.	C1	2			
8.2	Ball Valve RTJ 600#,Bolted Body, Replaceable Ball & Seats, Reduced Port, floating ball, Standard Lever Operated. as per ASME B-16.5 Body material A-216 Gr. WCB Stem/Ball material A 351 CF8M, Seal PTFE, .As per API 6D Fire Safe, Antistatic. Tag. No. (VB-104)						
i	Dia. 2"	Nos.	C1	2			
ii	Dia. 1"	Nos.	C1	3			
iii	Dia. 3/4"	Nos.	C1	2			
8.3	Ball Valve RTJ 600#,Bolted Body, Replaceable Ball & Seats, Full Port, Trunion Mounted, Standard Gear Operated. as per ASME B-16.5 Body material A-216 Gr. WCB Stem/Ball material A 351 CF8M, Seal PTFE, .As per API 6D Fire Safe, Antistatic. Tag. No. (VB-106)						
i	Dia. 6"	Nos.	C1	7			
8.4	Ball Valve RF, 150#,Bolted Body,Replaceable Ball & Seats, Full Port, Lever Operated. as per ASME B-16.5 Body material A-216 Gr. WCB, Stem/Ball material A 351 CF8M, Seal PTFE, . As per API 6D Fire Safe, Antistatic. Tag. No. (VB-100)						
i	Dia. 3/4"	Nos.	A1	2			
8.5	Ball Valve RF, 150#,Bolted Body,Replaceable Ball & Seats, Reduced Port, Lever Operated. as per ASME B-16.5 Body material A-216 Gr. WCB, Stem/Ball material A 351 CF8M, Seal PTFE, . As per API 6D Fire Safe, Antistatic. Tag. No. (VB-101)						
i	Dia. 6"	No.	A1	1			

OIL & GAS DEVELOPMENT COMPANY LIMITED

DESIGN OF PANDHI TIE-IN AT SINJHORO PLANT

BILL OF QUANTITIES FOR PROCUREMENT

DOC. NO. : 0604246-BOQ-001
PREP. : SAR
REV. : 0
DATE : 17-03-2020

SR #	ITEM DESCRIPTION	UNIT	SPEC	TOTAL Qty.	UNIT RATES (Pak. Rs)	TOTAL (Pak. Rs.)	REMARKS
9.0	**GATE VALVE:**						
9.1	Gate Valve, RTJ, 600# Flanged End as per ASME B16.5, B.B., OS&Y, Bolted Bonnet Body, Gland, Renewable seat, Body ASTM A-216 Gr. WCB.Trim:316 S.Steel. Handwheel Operated As per ASME B 16.34 Tag. No. (VG-103)						
i	Dia. 3"	Nos.	C1	2			
ii	Dia. 2"	Nos.	C1	3			
9.2	Gate Valve S.W 800# OS&Y, Bolted Bonnet Body, Gland, Renewable seat, Body material A-105 Trim:316 S.Steel. Handwheel Operated Tag. No. (VG-100)						
i	Dia. 3/4"	Nos.	C1	4			
10.0	**GLOBE VALVE:**						
10.1	Globe Valve, RTJ, 600# Flanged End as per ASME B16.5, B.B., OS&Y, Bolted Bonnet Body, Gland, Renewable seat, Body ASTM A-216 Gr. WCB.Trim:316 S.Steel. Handwheel Operated As per ASME B 16.34 Tag. No. (VGL-103)						
i	Dia. 2"	No.	C1	1			
11.0	**CHECK VALVE:**						
11.1	Wafer Check Valve, RTJ 600#, Flanged end, (ASME B16.5), Body : A-216 GR. WCB, Trim : 316 S.STteel, Bolted Bonnet, Swing Type & Renewable Seats, as per ASME B16.34 (VC-103)						
i	Dia. 2"	Nos.	C1	2			
12.0	**NEEDLE VALVE:**						
12.1	Needle Valve S.W 800#						
i	Dia. 3/4"	Nos.	-	3			
13.0	**FLANGES:**						
13.1	Flange, WN, 900#, RTJ, as per ASME B 16.5, Material: ASTM A-105						
i	Dia. 6" Sch. 80	Nos.	-	2			
ii	Dia. 4" Sch. 80	Nos.	-	2			
13.2	Flange, WN, 600#, RTJ, as per ASME B 16.5, Material: ASTM A-105						
i	Dia. 8" Sch. 80	No.	C1	1			
ii	Dia. 6" Sch. 80	Nos.	C1	19			
iii	Dia. X" Sch. 160	No.	C1	2			
iv	Dia. 4" Sch. 80	Nos.	C1	9			
v	Dia. 3" Sch. 80	Nos.	C1	10			
vi	Dia. 2" Sch. 160	Nos.	C1	23			
vii	Dia. 2" Sch. 80	Nos.	-	4			
13.3	Flange, WN, 300#, RF, as per ASME B 16.5, Material: ASTM A-105						
i	Dia. 3" Sch. 80	No.	-	1			
13.4	Flange, WN, 150#, RF, as per ASME B 16.5, Material: ASTM A-105						
i	Dia. 6" Sch. 40	Nos.	A1	2			
ii	Dia. 4" Sch. 40	Nos.	A1	2			
13.5	Flange, SW, 150#, RF, as per ASME B16.5, Material: ASTM A105						
i	Dia. 3/4"	Nos.	A1	2			

OIL & GAS DEVELOPMENT COMPANY LIMITED

DESIGN OF PANDHI TIE-IN AT SINJHORO PLANT

BILL OF QUANTITIES FOR PROCUREMENT

DOC. NO. : 0604246-BOQ-001
PREP. : SAR
REV. : 0
DATE : 17-03-2020

SR #	ITEM DESCRIPTION	UNIT	SPEC	TOTAL Qty.	UNIT RATES (Pak. Rs)	TOTAL (Pak. Rs.)	REMARKS
13.6	Flange, SW, 600#, RTJ, as per ASME B16.5, Material: ASTM A-105						
i	Dia. 1"	Nos.	C1	3			
ii	Dia. 3/4"	Nos.	C1	2			
13.7	Flange Blind, RTJ, as per ASME B16.5, Material: ASTM A105						
i	Dia. 8" 600#	Nos.	C1	1			
ii	Dia. 6" 600#	Nos.	C1	4			
iii	Dia. 1" 600#	Nos.	C1	3			
iv	Dia. 3/4" 600#	Nos.	C1	2			
13.8	Flange Blind, RTJ, as per ASME B16.5, Material: ASTM A105						
i	Dia. 6" 900#	Nos.	-	2			
13.9	Flange Blind, RF, as per ASME B16.5, Material: ASTM A105						
i	Dia. 6" 150#	No.	A1	1			
ii	Dia. 3/4" 150#	Nos.	A1	2			
14.0	**GASKETS:**						
14.1	Octagonal Ring , 316 L.S.S						
i	Dia. 8" 600#, R-49	No.	C1	3			
ii	Dia. 6" 900#, R-45	Nos.	C1	4			
iii	Dia. 6" 600#, R-45	Nos.	C1	19			
iv	Dia. 4" 900#, R-37	Nos.	-	2			
v	Dia. 4" 600#, R-37	Nos.	C1	9			
vi	Dia. 3" 600#, R-31	Nos.	C1	9			
vii	Dia. 2" 600#, R-23	Nos.	C1	25			
viii	Dia. 1" 600#, R-16	Nos.	C1	5			
ix	Dia. 3/4" 600#, R-13	Nos.	C1	6			
14.2	3mm Thick Compressed Graphite Filled,Spiral Wound 304 S.S.Central Ring Per ASME B 16.20						
i	Dia. 6" 150#	Nos.	A1	3			
ii	Dia. 4" 150#	Nos.	A1	2			
iii	Dia. 3" 300#	No.	A1	1			
iv	Dia. 3/4" 150#	Nos.	A1	3			
15.0	**STUDS/NUTS:**						
15.1	Studs with 2 Nuts, as per ASME B 16.5 Stud Material : A 193 Gr. B7M Cadmium Plated and Nuts Material : A 194 Gr. 2HM Cadmium Plated						
i	1 1/8" x 195 mm Long	Nos.	-	84			
ii	1" x 175 mm Long	Nos.	-	228			
iii	7/8" x 145 mm Long	Nos.	-	72			
iv	5/8" x 110 mm Long	Nos.	-	136			
v	5/8" x 90 mm Long	Nos.	-	56			
vi	3/4" x 100 mm Long	Nos.	-	24			
vii	1/2" x 65 mm Long	Nos.	-	16			
viii	1 1/8" x 170 mm Long	Nos.	-	16			
ix	3/4" x 110 mm Long	Nos.	-	8			
x	3/4" x 125 mm Long	Nos.	-	72			
xi	5/8" x 175 mm Long	Nos.	-	16			
16.0	**RESTRICTION ORIFICE:**						
16.1	Wafer type restriction orifice						
i	Dia. 2"	No.	-	1			

OIL & GAS DEVELOPMENT COMPANY LIMITED

DESIGN OF PANDHI TIE-IN AT SINJHORO PLANT

BILL OF QUANTITIES
FOR
PROCUREMENT

DOC. NO. : 0604246-BOQ-001
PREP. : SAR
REV. : 0
DATE : 17-03-2020

SR #	ITEM DESCRIPTION	UNIT	SPEC	TOTAL Qty.	UNIT RATES (Pak. Rs)	TOTAL (Pak. Rs.)	REMARKS
17.0	**HEX NIPPLE:**						
17.1	Reducing Hex Nipple 3000# NPT						
i	Dia. 3/4" x 1/2"	Nos.	-	3			
				TOTAL(Pak. Rs.)			

NOTE:

1 The Quantities taken in this BOQ are actual.

PIPING SPECIFICATION

OIL & GAS DEVELOPMENT COMPANY LIMITED

DESIGN OF PANDHI TIE-IN AT SINJHORO PLANT

PIPING SPECIFICATION

A1 (Plant Piping)

SPEC. NO. : 0604246-01-SP-001	**DATE :** 17-03-20	**Revision :** 0	**Prep. By. :** SAR

SERVICE	RATING	CORROSION ALLOWANCE	DESIGN CODE
PROCESS GAS	ASME CLASS 150	3 mm	ASME B31.3

PIPES

SIZE	DESIGNATION	DESCRIPTION
6"	Sch. 40	ASTM A106 Gr. B / API 5L Gr. B (SMLS) B.E. AS PER ASME B36.10
4"	Sch. 40	ASTM A106 Gr. B / API 5L Gr. B (SMLS) B.E. AS PER ASME B36.10
2"	Sch. 80	ASTM A106 Gr. B / API 5L Gr. B (SMLS) B.E. AS PER ASME B36.10
≤ 1 1/2"	Sch. 80	ASTM A106 Gr. B / API 5L Gr. B (SMLS) P.E. AS PER ASME B36.10

FITTINGS

SIZE	DESCRIPTION
2", 4" & 6"	BW, A-234 Gr. WPB AS PER ASME B16.9
≤ 1 1/2"	SW, A-105 AS PER ASME B16.11 6 , 3000#

FLANGES

SIZE	CLASS	DESCRIPTION
2", 4" & 6"	150#	WN, RF, ASME B16.5, ASTM A-105
≤ 1 1/2"	150#	SW, RF, ASME B16.5, ASTM A-105 (Note-3)

BOLTS & GASKETS

Stud Bolts	ASTM A-193 B7M, Cadmium Plated
Nuts	ASTM A-194 2HM, Cadmium Plated
Gaskets	3mm Thick Compressed Graphite Filled,Spiral Wound 304 S.S.Central Ring Per ASME B 16.20

VALVES

	SIZE	DESCRIPTION		SIZE	DESCRIPTION		SIZE	DESCRIPTION
GATE	≤ 1 1/2" 2", 4" & 6"	VG-100 VG-101	BALL	≤ 1 1/2" 2", 4" & 6"	VB-100 VB-101	OTHERS		
CHECK	≤ 1 1/2" 2", 4" & 6"	VC-100 VC-101	GLOBE	≤ 1 1/2" 2", 4" & 6"	VGL-100 VGL-101	OTHERS		

PRESSURE - TEMPERATURE RATING-ASME B16.5, MATERIAL GROUP 1.1

TEMPERATURE	**ºF**	−20 to 100	212	302	392	482	572	617	662
MAX. PRESSURE	**Psig**	284.2	256.7	229.1	200.1	175.45	147.9	134.85	121.8

DESIGN CONDITIONS	256.7 psig @ 212 °F	**HYDROSTATIC TEST PRESSURE**	384 psig

BRANCH CONNECTIONS

BRANCH SIZE (INCH) \ RUN SIZE (INCH)	32	30	28	26	24	22	20	18	16	14	12	10	8	6	4	3	2	1½	1	¾	½
½					S	S	S	S	S	S	S	S	S	S	S	S	Ts	Ts	Ts	Ts	Ts
¾					S	S	S	S	S	S	S	S	S	S	S	S	Ts	Ts	Ts	Ts	
1					S	S	S	S	S	S	S	S	S	S	S	S	Ts	Ts	Ts		
1½					S	S	S	S	S	S	S	S	S	S	S	S	Ts	Ts			
2					W	W	W	W	W	W	W	W	W	W	RT	RT	ET				
3					W	W	W	W	W	W	W	W	W	RT	RT	ET					
4					W	W	W	W	W	W	W	W	RT	RT	ET						
6					W	W	W	W	W	W	RT	RT	RT	ET							
8					W	W	W	W	RT	RT	RT	RT	ET								
10					W	W	RT	RT	RT	RT	RT	ET									
12					W	RT	RT	RT	RT	RT	ET										
14					RT	RT	RT	RT	RT	ET											
16					RT	RT	RT	RT	ET												
18					RT	RT	RT	ET													
20					RT	RT	ET														
22					RT	ET															
24					ET																

NOTES:

1. Reduced fitting thickness shall match heavier pipe wall thickness, taper to match thinner pipe wall.
2. Instrument connections shall be screwed beyond the first block valve of process piping.
3. Bore to match pipe I.D. for Welding Neck flanges.
4. All materials shall comply with NACE MR-0175 & ISO 15156.
5. Under ground piping should be coated with Zinc-Rich or Zinc Silicate primer, & apply 3 Layer Polyethylene Coted.

LEGENDS:

ET	=	Equal Tee, Butt Welding
RT	=	Reducing Tee, Butt Welding
Ts	=	Reducing Tee, Socket Welding
W	=	Weldolet
S	=	Sockolet 3000#

OIL & GAS DEVELOPMENT COMPANY LIMITED

DESIGN OF PANDHI TIE-IN AT SINJHORO PLANT

PIPING SPECIFICATION

C1 (Plant Piping)

SPEC. NO. : 0604246-01-SP-002	**DATE :** 17-03-20	**Revision :** 0	**Prep. By. :** SAR

SERVICE	RATING	CORROSION ALLOWANCE	DESIGN CODE
PROCESS GAS	ASME CLASS 600#	3 mm	ASME B31.3

PIPES			FITTINGS	
SIZE	**DESIGNATION**	**DESCRIPTION**	**SIZE**	**DESCRIPTION**
8" to 6"	Sch. 80	ASTM A106 Gr. B / API 5L Gr. B (SMLS) B.E. AS PER ASME B36.10	2" to 8"	BW, A-234 Gr. WPB AS PER ASME B16.9
3" to 4"	Sch. 80	ASTM A106 Gr. B / API 5L Gr. B (SMLS) B.E. AS PER ASME B36.10	≤ 1 1/2"	SW, A-105 AS PER ASME B16.11, 3000#
3/4" to 2"	Sch. 160	ASTM A106 Gr. B / API 5L Gr. B (SMLS) P.E. AS PER ASME B36.10		

FLANGES			BOLTS & GASKETS	
SIZE	**CLASS**	**DESCRIPTION**	Stud Bolts	ASTM A-193 B7M, Cadmium Plated
2" to 8"	600#	WN, RTJ, ASME B16.5, ASTM A-105	Nuts	ASTM A-194 2HM, Cadmium Plated
3/4"	600#	SW, RTJ, ASME B16.5, ASTM A-105 (Note-3)	Gaskets	Octagonal Ring, Type 316L S.S.

VALVES

	SIZE	DESCRIPTION		SIZE	DESCRIPTION		SIZE	DESCRIPTION
GATE	2" to 6"	VG-103	BALL	3/4" 3" to 4" 6"	VB-104 VB-105 VB-106	OTHERS		
CHECK	2" to 6"	VC-103	GLOBE	2" to 6"	VGL-103	OTHERS		

PRESSURE - TEMPERATURE RATING-ASME B16.5, MATERIAL GROUP 1.1

TEMPERATURE	ºF	−20 to 100	122	212	302	392	482	572	617
MAX. PRESSURE	Psig	1480	1453	1351	1308	1270	1216	1154	1122

DESIGN CONDITIONS	1328 psig @ 212 °F	**HYDROSTATIC TEST PRESSURE**	1992 psig

BRANCH CONNECTIONS

BRANCH SIZE (INCH)	RUN SIZE (INCH) 32	30	28	26	24	22	20	18	16	14	12	10	8	6	4	3	2	1½	1	¾	½
½					S	S	S	S	S	S	S	S	S	S	S	S	S	RT	RT	RT	ET
¾					S	S	S	S	S	S	S	S	S	S	S	S	S	RT	RT	ET	
1					S	S	S	S	S	S	S	S	S	S	S	S	S	RT	ET		
1½					S	S	S	S	S	S	S	S	S	S	S	S	RT	ET			
2					W	W	W	W	W	W	W	W	W	W	RT	RT	ET				
3					W	W	W	W	W	W	W	W	W	RT	RT	ET					
4					W	W	W	W	W	W	W	RT	RT	RT	ET						
6					W	W	W	W	RT	RT	RT	RT	RT	ET							
8					W	W	RT	RT	RT	RT	RT	RT	ET								
10					RT	RT	RT	RT	RT	RT	RT	ET									
12					RT	RT	RT	RT	RT	RT	ET										
14					RT	RT	RT	RT	RT	ET											
16					RT	RT	RT	RT	ET												
18					RT	RT	RT	ET													
20					RT	RT	ET														
22					RT	ET															
24					ET																

LEGENDS:

ET = Equal Tee
RT = Reducing Tee
W = Weldolet
S = Sockolet 3000#

NOTES:

1. Reduced fitting thickness shall match heavier pipe wall thickness, taper to match thinner pipe wall.
2. Instrument connections shall be screwed beyond the first block valve of process piping.
3. Bore to match pipe I.D. for Welding Neck flanges.
4. Under ground piping should be coated with Zinc-Rich or Zinc Silicate primer, & apply 3 Layer Polyethylene Coted.

OIL & GAS DEVELOPMENT COMPANY LIMITED

DESIGN OF PANDHI TIE-IN AT SINJHORO PLANT

VALVE SPECIFICATION

FOR GATE VALVES

DOC. NO. : 0604246-01-VS-001	DATE : - 17-03-2020	REV. : 0	PREP. BY SAR

VALVE	SIZE	RATING (lb)	ENDS	STYLE	OPERATOR	DESIGN & TEST	MATERIAL	
							BODY	TRIM
VG-100	≤ 1 1/2"	800	SW	OS&Y, BOLTED BONNET & GLAND, SOLID WEDGE & RENEWABLE SEATS	HANDWHEEL	API 602	A-105	316 S.STEEL
VG-101	2", 4" & 6"	150	RF (ASME B16.5)	OS&Y, BOLTED BONNET & GLAND, SOLID WEDGE & RENEWABLE SEATS	HANDWHEEL	API 600	A-216 GR. WCB	316 S.STEEL
VG-103	2" to 6"	600	RTJ (ASME B16.5)	OS&Y, BOLTED BONNET & GLAND, SOLID WEDGE & RENEWABLE SEATS	HANDWHEEL	API 600	A-216 GR. WCB	316 S.STEEL

OIL & GAS DEVELOPMENT COMPANY LIMITED

DESIGN OF PANDHI TIE-IN AT SINJHORO PLANT

VALVE SPECIFICATION

FOR BALL VALVES

DOC. NO. : 0604246-01-VS-002	DATE : - 17-03-2020	REV. : 0	PREP. BY SAR

VALVE	SIZE	RATING (lb)	ENDS	STYLE	OPERATOR	DESIGN & TEST	MATERIAL		
							BODY	STEM/BALL	SEAL
VB-100	≤ 1 1/2"	150	RF (ASME B16.5)	BOLTED BODY, REPLACEABLE BALL & SEATS, FULL PORT, FLOATING BALL	LEVER	BS 5351 & BS 5146 / API 607 (FIRE SAFE)	A-105	A 351-CF8M	PTFE
VB-101	2", 4" & 6"	150	RF (ASME B16.5)	BOLTED BODY, REPLACEABLE BALL & SEATS, REDUCED PORT, FLOATING BALL	LEVER UPTP 4", Gearbox With Handwheel Over 4"	API 6D, FIRESAFE, ANTISTATIC	A-216 Gr. WCB	A 351-CF8M	PTFE
VB-104	3/4"	600	RTJ (ASME B16.5)	BOLTED BODY, REPLACEABLE BALL & SEATS, REDUCED PORT, FLOATING BALL	LEVER	BS 5351 & BS 5146 / API 607 (FIRE SAFE)	A-105	A 351-CF8M	PTFE
VB-105	3" - 4"	600	RTJ (ASME B16.5)	BOLTED BODY, REPLACEABLE BALL & SEATS, REDUCED PORT, FLOATING BALL	LEVER	API 6D, FIRESAFE, ANTISTATIC	ASTM A216 WCB	A 351-CF8M	PTFE
VB-106	6" - 8"	600	RTJ (ASME B16.5)	BOLTED BODY, REPLACEABLE BALL & SEATS, FUL PORT, TRUNION MOUNTED	GEAR	API 6D, FIRESAFE, ANTISTATIC	ASTM A216 WCB	A 351-CF8M	PTFE
VB-108	6"	900	RTJ (ASME B16.5)	BOLTED BODY, REPLACEABLE BALL & SEATS, FUL PORT, TRUNION MOUNTED	GEAR	API 6D, FIRESAFE, ANTISTATIC	ASTM A216 WCB	A 351-CF8M	PTFE
VB-111	3/4"	1500	RTJ (ASME B16.5)	BOLTED BODY, REPLACEABLE BALL & SEATS, REDUCED PORT, FLOATING BALL	LEVER	API 6D, FIRESAFE, ANTISTATIC	ASTM A216 WCB	A 351-CF8M	PTFE

OIL & GAS DEVELOPMENT COMPANY LIMITED

DESIGN OF PANDHI TIE-IN AT SINJHORO PLANT

VALVE SPECIFICATION
FOR GLOBE VALVES

DOC. NO. : 0604246-01-VS-004 | **DATE : -17-03-2020** | **REV. : 0** | **PREP. BY SAR**

VALVE	SIZE	RATING (lb)	ENDS	STYLE	OPERATOR	DESIGN & TEST	MATERIAL	
							BODY	TRIM
VGL-100	≤1 1/2"	800	SW	OS&Y, BOLTED BONNET & GLAND & RENEWABLE SEATS	HANDWHEEL	ASME B 16.34	A-105	316 S.STEEL
VGL-101	2", 4" & 6"	150	RF (ASME B16.5)	OS&Y, BOLTED BONNET & GLAND & RENEWABLE SEATS	HANDWHEEL	ASME B 16.34	A-216 GR. WCB	316 S.STEEL
VGL-103	2" to 6"	600	RTJ (ASME B16.5)	OS&Y, BOLTED BONNET & GLAND & RENEWABLE SEATS	HANDWHEEL	ASME B 16.34	A-216 GR. WCB	316 S.STEEL
VGL-104	6"	900	RTJ (ASME B16.5)	OS&Y, BOLTED BONNET & GLAND & RENEWABLE SEATS	HANDWHEEL	ASME B 16.34	A-216 GR. WCB	316 S.STEEL

OIL & GAS DEVELOPMENT COMPANY LIMITED

DESIGN OF PANDHI TIE-IN AT SINJHORO PLANT

VALVE SPECIFICATION

FOR CHECK VALVES

DOC. NO. : 0604246-01-VS-003	DATE : - 17-03-2020	REV. : 0	PREP. BY SAR

VALVE	SIZE	RATING (lb)	ENDS	STYLE	OPERATOR	DESIGN & TEST	MATERIAL	
							BODY	TRIM
VC-100	≤ 1 1/2"	800	SW	BOLTED BONNET, PISTON TYPE & RENEWABLE SEATS	-	ASME B 16.34	A-105	316 S.STEEL
VC-101	2", 4" & 6"	150	RF (ASME B16.5)	BOLTED BONNET, SWING TYPE & RENEWABLE SEATS	-	ASME B 16.34	A-216 GR. WCB	316 S.STEEL
VC-103	2" to 6"	600	RTJ (ASME B16.5)	WAFER TYPE, METAL TO METAL SEAT,DUAL PLATE	-	ASME B 16.34 API 594	A-216 GR. WCB	316 S.STEEL
VC-104	6"	900	RTJ (ASME B16.5)	BOLTED BONNET, SWING TYPE & RENEWABLE SEATS	-	ASME B 16.34	A-216 GR. WCB	316 S.STEEL

DRAWINGS LIST

OIL & GAS DEVELOPMENT COMPANY LIMITED

DESIGN OF PANDHI TIE-IN AT SINJHORO PLANT

Drawing List

DOC. NO. : 0604246-ME-LT-001
PRE. : SAR
REV. : 0
DATE : 17/03/2020

S.NO	DESCRIPTION	DRAWING NO.	REVISION	REMARKS
1.0	**MECHANICAL**			
1.1	**EQUIPMENT LAYOUT**			
1.1.1	EQUIPMENT LAYOUT	0604246-EL-001	0	ISSUED FOR REVIEW
1.2	**PLOT PLAN**			
1.2.1	PLOT PLAN	0604246-PP-001	0	ISSUED FOR REVIEW
1.3	**PIPING LAYOUT:**			
1.3.1	KEY PLAN	0604246-PL-001	0	ISSUED FOR REVIEW
1.3.2	PIPING LAYOUT	0604246-PL-002	0	ISSUED FOR REVIEW
1.3.3	PIPING LAYOUT	0604246-PL-003	0	ISSUED FOR REVIEW
1.3.4	PIPING LAYOUT	0604246-PL-004	0	ISSUED FOR REVIEW
1.4	**PIPING ISOMETRICS:**			
1.4.1	PIPING ISOMETRIC	0604246-ISO-001	0	ISSUED FOR REVIEW
1.4.2	PIPING ISOMETRIC	0604246-ISO-002	0	ISSUED FOR REVIEW
1.4.3	PIPING ISOMETRIC	0604246-ISO-003	0	ISSUED FOR REVIEW
1.4.4	PIPING ISOMETRIC	0604246-ISO-004	0	ISSUED FOR REVIEW
1.4.5	PIPING ISOMETRIC	0604246-ISO-005	0	ISSUED FOR REVIEW
1.4.6	PIPING ISOMETRIC	0604246-ISO-006	0	ISSUED FOR REVIEW
1.4.7	PIPING ISOMETRIC	0604246-ISO-007	0	ISSUED FOR REVIEW
1.4.8	PIPING ISOMETRIC	0604246-ISO-008	0	ISSUED FOR REVIEW
1.4.9	PIPING ISOMETRIC	0604246-ISO-009	0	ISSUED FOR REVIEW
1.4.10	PIPING ISOMETRIC	0604246-ISO-010	0	ISSUED FOR REVIEW
1.4.11	PIPING ISOMETRIC	0604246-ISO-011	0	ISSUED FOR REVIEW
1.4.12	PIPING ISOMETRIC	0604246-ISO-012	0	ISSUED FOR REVIEW
1.4.13	PIPING ISOMETRIC	0604246-ISO-013	0	ISSUED FOR REVIEW
1.4.14	PIPING ISOMETRIC	0604246-ISO-014	0	ISSUED FOR REVIEW
1.4.15	PIPING ISOMETRIC	0604246-ISO-015	0	ISSUED FOR REVIEW
1.4.16	PIPING ISOMETRIC	0604246-ISO-016	0	ISSUED FOR REVIEW

DRAWINGS

EQUIPMENT LAYOUT

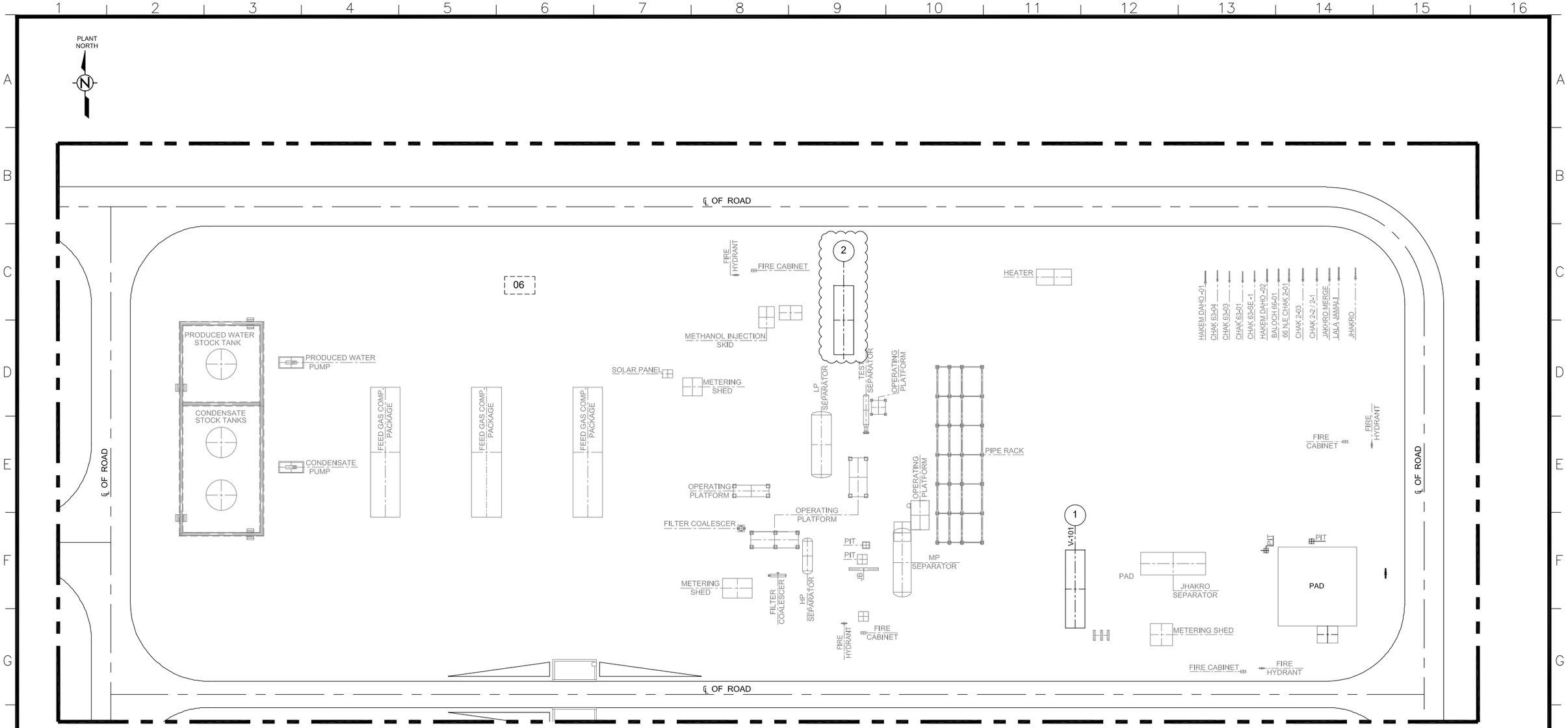

NOTE:

1. ALL DIMENSION ARE IN mm UNLESS STATED OTHERWISE.

EQUIPMENT LIST

TAG.#	DESCRIPTION
1	SEPARATOR VESSEL (V-101)
2	THREE PHASE SEPARATOR (V-107)

REV.	DATE	DESCRIPTION OF REVISION	PREP'D:	CHECK	APPR.
0	14/03/2020	ISSUED FOR REVIEW	MK	SAR	

PETROCHEMICAL ENGINEERING CONSULTANTS
C-2, BLOCK NO. 17, GULSHAN-E-IQBAL, NEAR NATIONAL STADIUM, KARACHI-75300. PAKISTAN.
TEL. +92 (21) 34827780, 34961088, FAX: +92 21 34961089, E-Mail: contact@pcec.com.pk web site: www.pcec.com.pk

CLIENT : OIL & GAS DEVELOPMENT COMPANY LIMITED

PROJECT : DESIGN OF PANDHI TIE-IN AT SINJHORO PLANT

TITLE : EQUIPMENT LAYOUT

JOB NO	DRAWING NO	SHEET NO	SCALE	SHEET SIZE	REV
0604246	0604246-EL-001	1 OF 1	1:300	A1	0

THIS DRAWING AND DESIGN IS THE PROPERTY OF PETROCHEMICAL AND MUST NOT BE COPIED OR PASSED TO ANY THIRD PARTY WITHOUT WRITTEN CONSENT FROM THE PETROCHEMICAL ENGINEERING CONSULTANTS

Petrochemical Engineering Consultants

PLOT PLAN

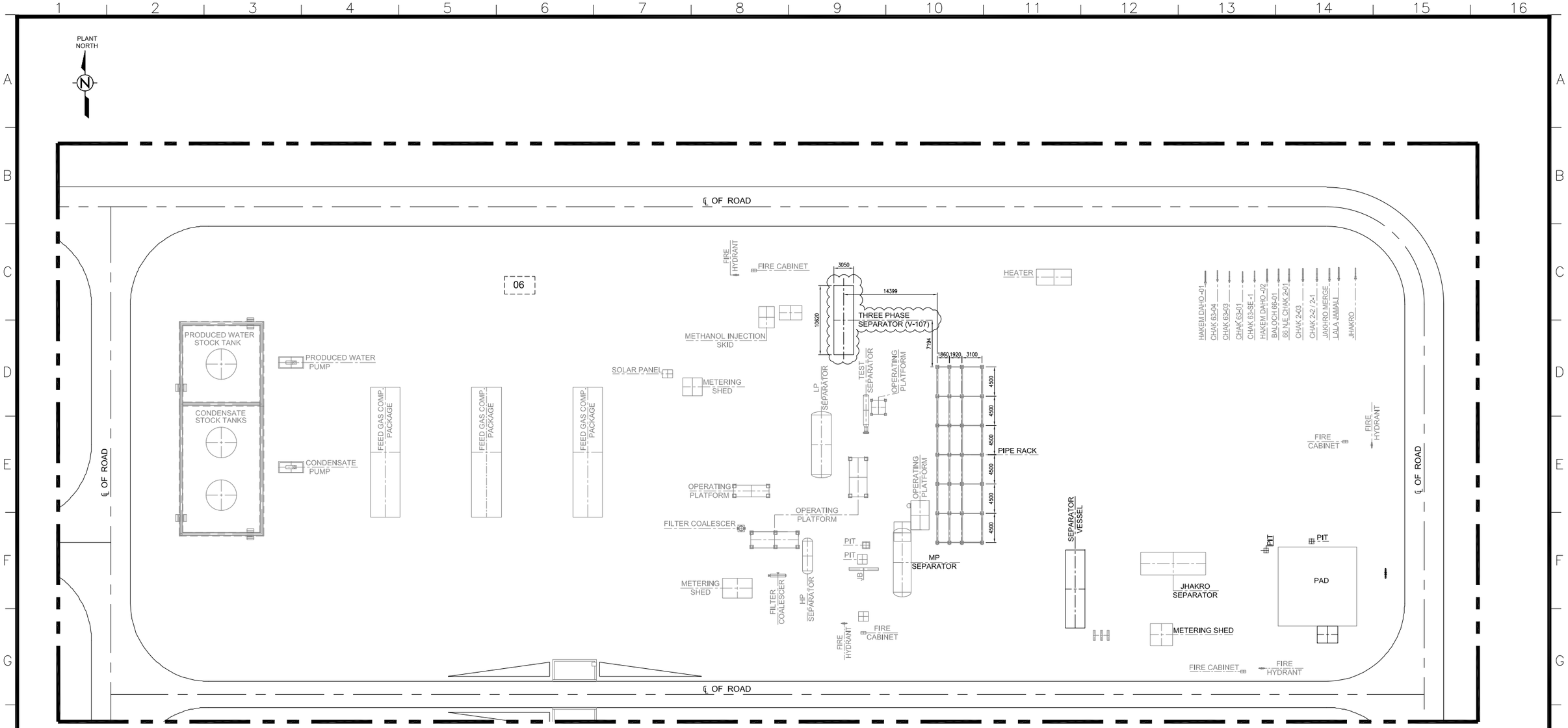

NOTE:

1. ALL DIMENSION ARE IN mm UNLESS STATED OTHERWISE.

REV.	DATE	DESCRIPTION OF REVISION	PREP'D:	CHECK	APPR.
0	14/03/2020	ISSUED FOR REVIEW	MK	SAR	

PETROCHEMICAL ENGINEERING CONSULTANTS

C-2, BLOCK NO. 17, GULSHAN-E-IQBAL, NEAR NATIONAL STADIUM, KARACHI-75300. PAKISTAN.
TEL. +92 (21) 34827780, 34961088, FAX: +92 21 34961089, E-Mail: contact@pcec.com.pk web site: www.pcec.com.pk

CLIENT : OIL & GAS DEVELOPMENT COMPANY LIMITED

PROJECT : DESIGN OF PANDHI TIE-IN AT SINJHORO PLANT

TITLE : PLOT PLAN

JOB NO	DRAWING NO	SHEET NO	SCALE	SHEET SIZE	REV
0604246	0604246-PP-001	1 OF 1	1:300	A1	0

THIS DRAWING AND DESIGN IS THE PROPERTY OF PETROCHEMICAL AND MUST NOT BE COPIED OR PASSED TO ANY THIRD PARTY WITHOUT WRITTEN CONSENT FROM THE PETROCHEMICAL ENGINEERING CONSULTANTS

Petrochemical Engineering Consultants

PIPING LAYOUT

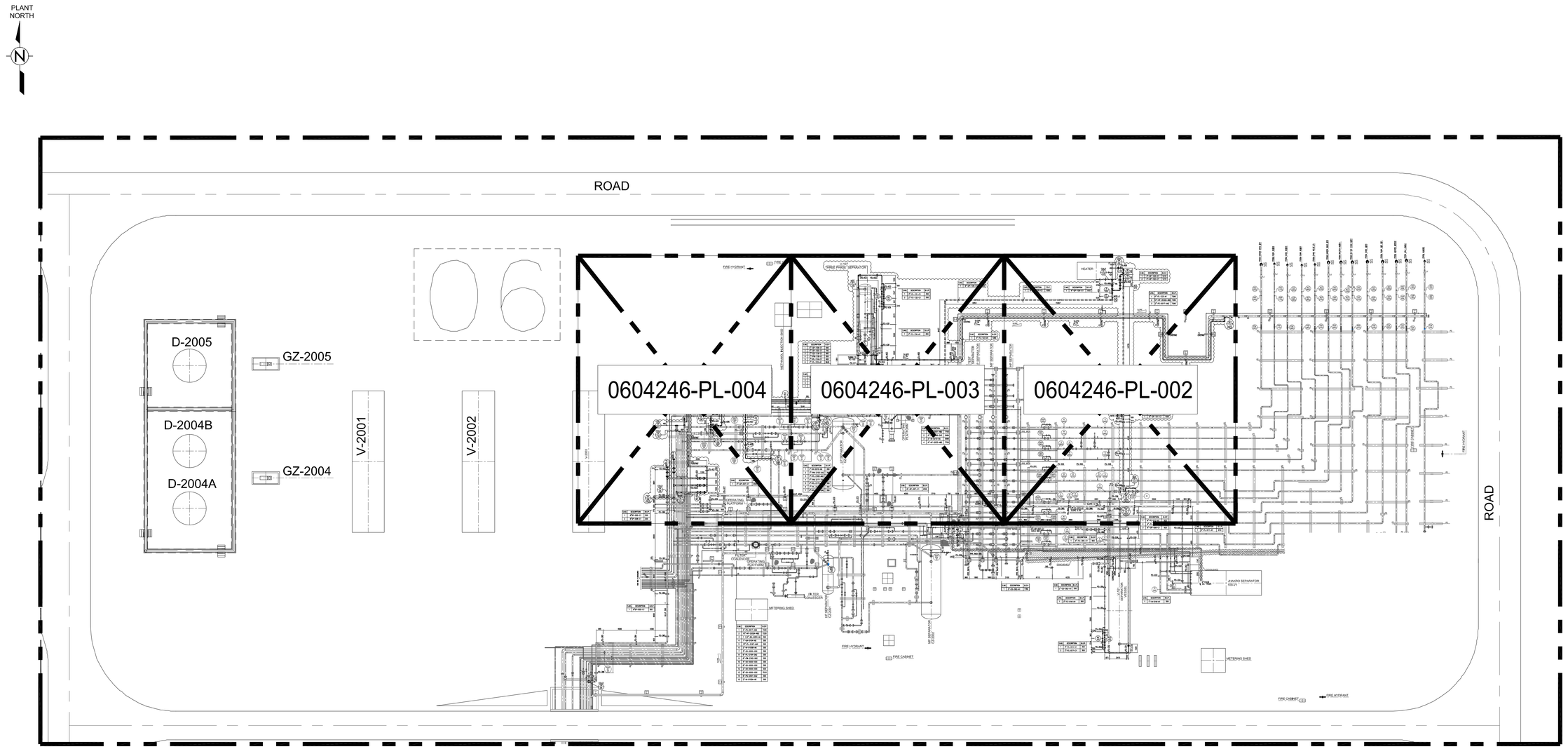

REV.	DATE	DESCRIPTION OF REVISION	PREP'D:	CHECK	APPR.
0	14/03/2020	ISSUED FOR REVIEW	AHK	SAR	

PETROCHEMICAL ENGINEERING CONSULTANTS
C-2, BLOCK NO. 17, GULSHAN-E-IQBAL, NEAR NATIONAL STADIUM, KARACHI-75300. PAKISTAN.
TEL. +92 (21) 34827780, 34961088, FAX: +92 21 34961089, E-Mail: contact@pcec.com.pk web site: www.pcec.com.pk

CLIENT : OIL & GAS DEVELOPMENT COMPANY LIMITED

PROJECT : DESIGN OF PANDHI TIE-IN AT SINJHORO PLANT

TITLE : KEY PLAN

JOB NO	DRAWING NO	SHEET NO	SCALE	SHEET SIZE	REV
0604246	0604246-PL-001	1 OF 1	1:300	A1	0

THIS DRAWING AND DESIGN IS THE PROPERTY OF PETROCHEMICAL AND MUST NOT BE COPIED OR PASSED TO ANY THIRD PARTY WITHOUT WRITTEN CONSENT FROM THE PETROCHEMICAL ENGINEERING CONSULTANTS

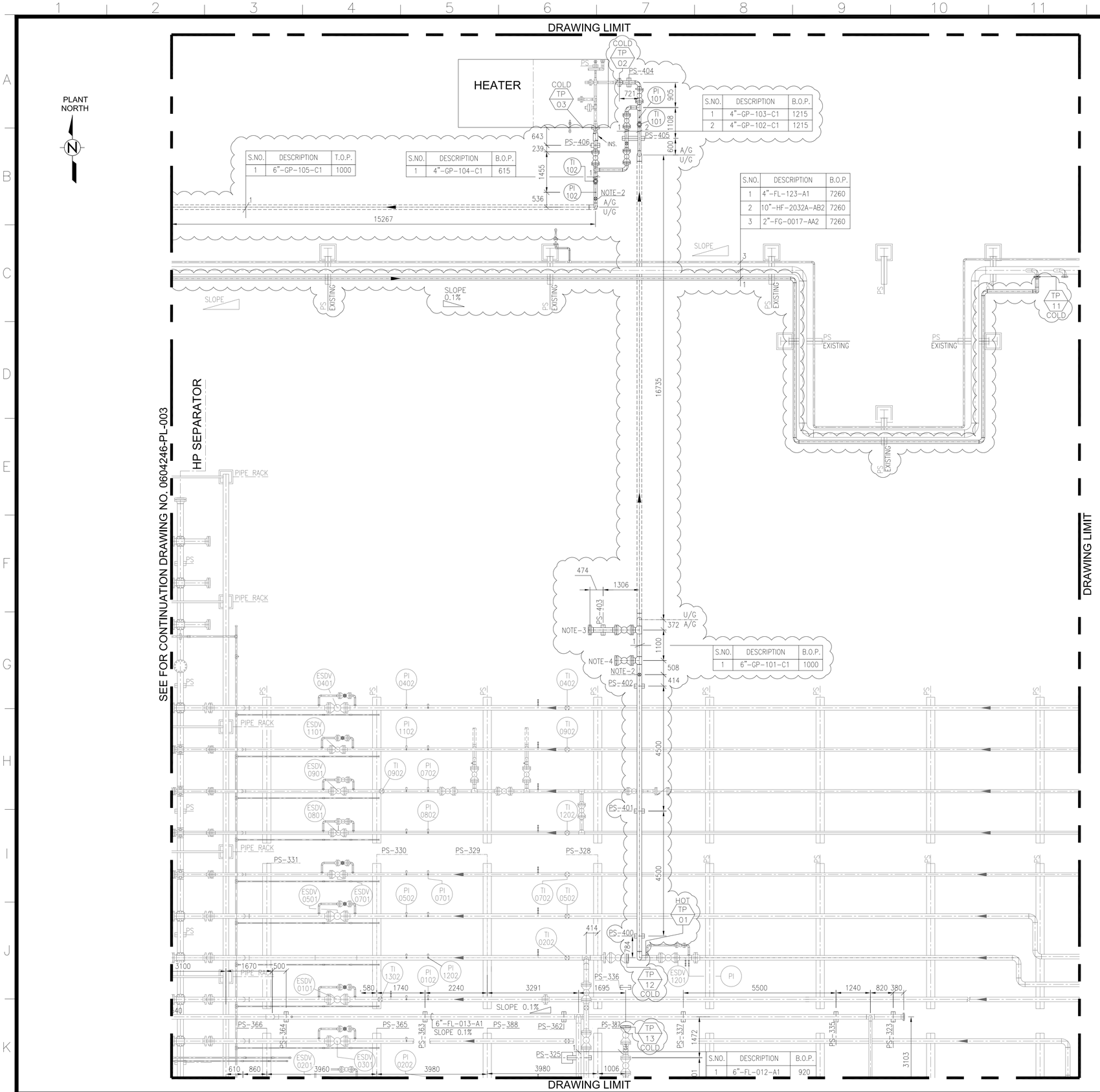

S.NO.	DESCRIPTION	B.O.P.
1	4"-GP-103-C1	1215
2	4"-GP-102-C1	1215

S.NO.	DESCRIPTION	T.O.P.
1	6"-GP-105-C1	1000

S.NO.	DESCRIPTION	B.O.P.
1	4"-GP-104-C1	615

S.NO.	DESCRIPTION	B.O.P.
1	4"-FL-123-A1	7260
2	10"-HF-2032A-AB2	7260
3	2"-FG-0017-AA2	7260

S.NO.	DESCRIPTION	B.O.P.
1	6"-GP-101-C1	1000

S.NO.	DESCRIPTION	B.O.P.
1	6"-FL-012-A1	920

NOTES:

1. ALL DIMENSION ARE IN mm UNLESS STATED OTHERWISE.
2. PROVISION FOR POUR POINT DEPRESSANT INJECTION.
3. PROVISION FOR TEST SEPARATOR.
4. PROVISION FOR FUTURE CONNECTION.
5. ALL DIMENSIONS, ELEVATIONS AND ORIENTATIONS TO BE VERIFIED BY THE CONTRACTOR BEFORE UNDERTAKING ANY KIND OF FABRICATION, CONSTRUCTION AND INSTALLATION WORK AT SITE.

REV.	DATE	DESCRIPTION OF REVISION	PREP'D:	CHECK	APPR.
0	14/03/2020	ISSUED FOR REVIEW	AHK	SAR	

PETROCHEMICAL ENGINEERING CONSULTANTS
C-2, BLOCK NO. 17, GULSHAN-E-IQBAL, NEAR NATIONAL STADIUM, KARACHI-75300. PAKISTAN.
TEL. +92 (21) 34827780, 34961088, FAX: +92 21 34961089, E-Mail: contact@pcec.com.pk web site: www.pcec.com.pk

CLIENT : OIL & GAS DEVELOPMENT COMPANY LIMITED

PROJECT : DESIGN OF PANDHI TIE-IN AT SINJHORO PLANT

TITLE : PIPING LAYOUT

JOB NO	DRAWING NO	SHEET NO	SCALE	SHEET SIZE	REV
0604246	0604246-PL-002	1 OF 1	1:100	A2	0

THIS DRAWING AND DESIGN IS THE PROPERTY OF PETROCHEMICAL AND MUST NOT BE COPIED OR PASSED TO ANY THIRD PARTY WITHOUT WRITTEN CONSENT FROM THE PETROCHEMICAL ENGINEERING CONSULTANTS

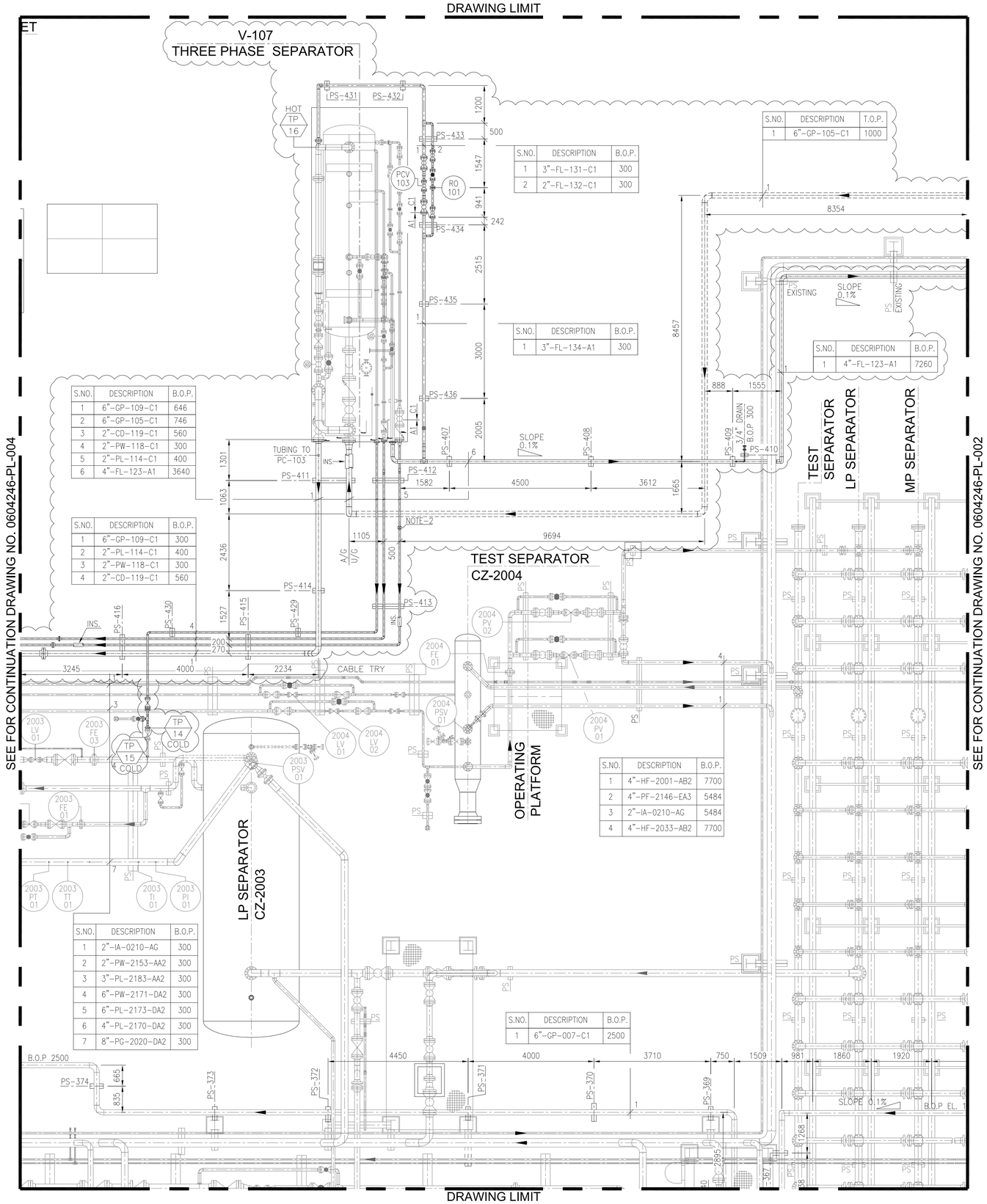

S.NO.	DESCRIPTION	B.O.P.
1	3"-FL-131-C1	300
2	2"-FL-132-C1	300

S.NO.	DESCRIPTION	T.O.P.
1	6"-GP-105-C1	1000

S.NO.	DESCRIPTION	B.O.P.
1	3"-FL-134-A1	300

S.NO.	DESCRIPTION	B.O.P.
1	4"-FL-123-A1	7260

S.NO.	DESCRIPTION	B.O.P.
1	6"-GP-109-C1	646
2	6"-GP-105-C1	746
3	2"-CD-119-C1	560
4	2"-PW-118-C1	300
5	2"-PL-114-C1	400
6	4"-FL-123-A1	3640

S.NO.	DESCRIPTION	B.O.P.
1	6"-GP-109-C1	300
2	2"-PL-114-C1	400
3	2"-PW-118-C1	300
4	2"-CD-119-C1	560

S.NO.	DESCRIPTION	B.O.P.
1	4"-HF-2001-AB2	7700
2	4"-PF-2146-EA3	5484
3	2"-IA-0210-AG	5484
4	4"-HF-2033-AB2	7700

S.NO.	DESCRIPTION	B.O.P.
1	2"-IA-0210-AG	300
2	2"-PW-2153-AA2	300
3	3"-PL-2183-AA2	300
4	6"-PW-2171-DA2	300
5	6"-PL-2173-DA2	300
6	4"-PL-2170-DA2	300
7	8"-PG-2020-DA2	300

S.NO.	DESCRIPTION	B.O.P.
1	6"-GP-007-C1	2500

NOTES:

1. ALL DIMENSION ARE IN mm UNLESS STATED OTHERWISE.
2. PROVISION FOR POUR POINT DEPRESSANT INJECTION.
3. ALL DIMENSIONS, ELEVATIONS AND ORIENTATIONS TO BE VERIFIED BY THE CONTRACTOR BEFORE UNDERTAKING ANY KIND OF FABRICATION, CONSTRUCTION AND INSTALLATION WORK AT SITE.

REV.	DATE	DESCRIPTION OF REVISION	PREP'D:	CHECK	APPR.
0	14/03/2020	ISSUED FOR REVIEW	AHK	SAR	

PETROCHEMICAL ENGINEERING CONSULTANTS
C-2, BLOCK NO. 17, GULSHAN-E-IQBAL, NEAR NATIONAL STADIUM, KARACHI-75300. PAKISTAN.
TEL +92 (21) 34827780, 34961088, FAX: +92 21 34961089, E-Mail: contact@pcec.com.pk web site: www.pcec.com.pk

CLIENT : OIL & GAS DEVELOPMENT COMPANY LIMITED

PROJECT : DESIGN OF PANDHI TIE-IN AT SINJHORO PLANT

TITLE : PIPING LAYOUT

JOB NO	DRAWING NO	SHEET NO	SCALE	SHEET SIZE	REV
0604246	0604246-PL-003	1 OF 1	1:100	A2	0

THIS DRAWING AND DESIGN IS THE PROPERTY OF PETROCHEMICAL AND MUST NOT BE COPIED OR PASSED TO ANY THIRD PARTY WITHOUT WRITTEN CONSENT FROM THE PETROCHEMICAL ENGINEERING CONSULTANTS

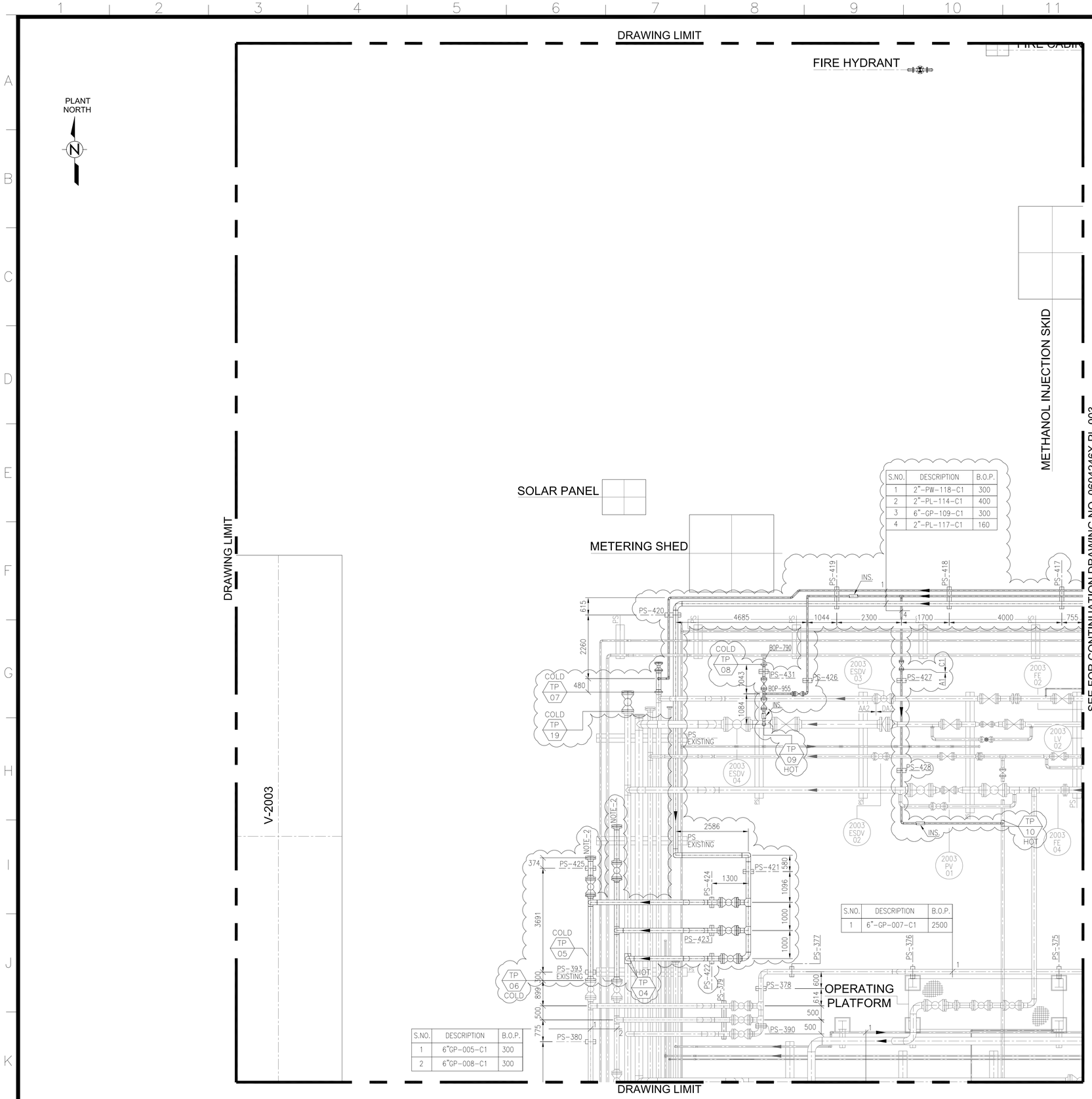

S.NO.	DESCRIPTION	B.O.P.
1	2"-PW-118-C1	300
2	2"-PL-114-C1	400
3	6"-GP-109-C1	300
4	2"-PL-117-C1	160

S.NO.	DESCRIPTION	B.O.P.
1	6"-GP-007-C1	2500

S.NO.	DESCRIPTION	B.O.P.
1	6"GP-005-C1	300
2	6"GP-008-C1	300

NOTES:

1. ALL DIMENSION ARE IN mm UNLESS STATED OTHERWISE.
2. PROVISION FOR FUTURE CONNECTION.
3. ALL DIMENSIONS, ELEVATIONS AND ORIENTATIONS TO BE VERIFIED BY THE CONTRACTOR BEFORE UNDERTAKING ANY KIND OF FABRICATION, CONSTRUCTION AND INSTALLATION WORK AT SITE.

REV.	DATE	DESCRIPTION OF REVISION	PREP'D:	CHECK	APPR.
0	14/03/2020	ISSUED FOR REVIEW	AHK	SAR	

PETROCHEMICAL ENGINEERING CONSULTANTS
C-2, BLOCK NO. 17, GULSHAN-E-IQBAL, NEAR NATIONAL STADIUM, KARACHI-75300. PAKISTAN.
TEL: +92 (21) 34827780, 34961088, FAX: +92 21 34961089, E-Mail: contact@pcec.com.pk web site: www.pcec.com.pk

CLIENT : OIL & GAS DEVELOPMENT COMPANY LIMITED

PROJECT : DESIGN OF PANDHI TIE-IN AT SINJHORO PLANT

TITLE : PIPING LAYOUT

JOB NO	DRAWING NO	SHEET NO	SCALE	SHEET SIZE	REV
0604246	0604246-PL-004	1 OF 1	1:100	A2	0

THIS DRAWING AND DESIGN IS THE PROPERTY OF PETROCHEMICAL AND MUST NOT BE COPIED OR PASSED TO ANY THIRD PARTY WITHOUT WRITTEN CONSENT FROM THE PETROCHEMICAL ENGINEERING CONSULTANTS

ISOMETRICS

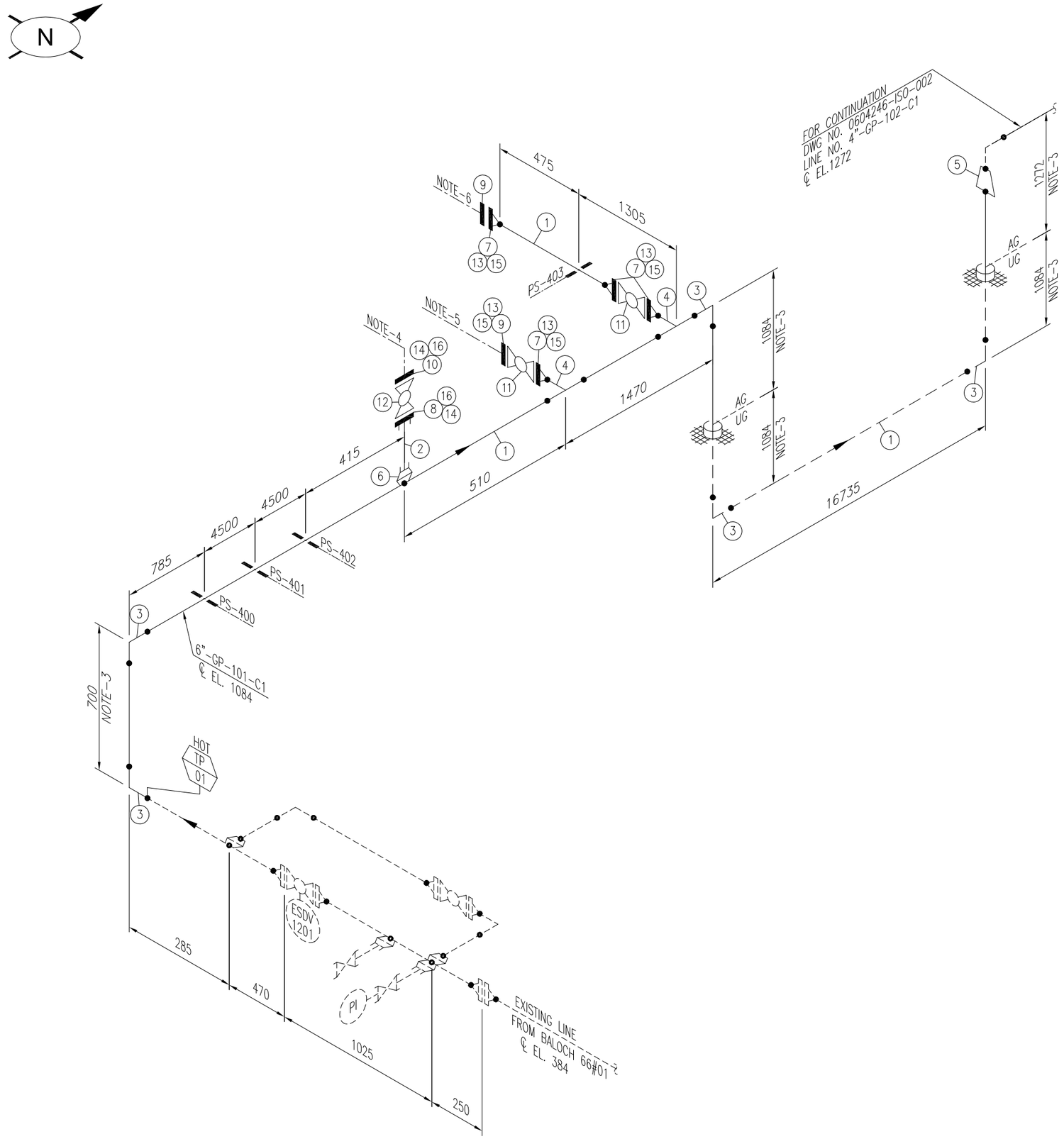

Sr. NO.	SIZE	DESCRIPTION	QTY.	MATERIAL	(MAT. SPEC)	REMARKS
1	6"	PIPE SCH.80 BE SMLS	32.9M	ASTM A-106 GR.B	C1	
2	1"	PIPE SCH.160 PE SMLS	0.2M	ASTM A-106 GR.B	C1	
3	6"	ELBOW 90° LR SCH.80 BW	5	ASTM A-234 Gr. WPB	C1	
4	6"	EQUAL TEE SCH.80 BW	2	ASTM A-234 Gr. WPB	C1	
5	6"x4"	CONC REDUCER SCH.80 BW	1	ASTM A-234 Gr. WPB	C1	
6	6"X1"	SOCKOLET, 3000# SW	1	ASTM A-105	C1	
7	6"	W.N. FLANGE RTJ. SCH.80 BW 600#.	4	ASTM A-105	C1	
8	1"	S.W FLANGE RTJ. 600#.	1	ASTM A-105	C1	
9	6"	BLIND FLANGE RTJ. 600#.	2	ASTM A-105	C1	
10	1"	BLIND FLANGE RTJ. 600#.	1	ASTM A-105	C1	
11	6"	BALL VALVE RTJ. 600#.	2	SEE TAG NO. VB-106	C1	
12	1"	BALL VALVE RTJ. 600#.	1	SEE TAG NO. VB-104	C1	
13	6"	OCTAGONAL RING, 600# R-45	5	316L S.S.	C1	
14	1"	OCTAGONAL RING, 600# R-16	2	316L S.S.	C1	
15	1"	LG STUD BOLTS C/W 2 NUTS 175mm LONG	60	ASTM A 193 Gr. B7 CADMIUM PLATED ASTM A 194 Gr. 2H CADMIUM PLATED	C1	
16	5/8"	LG STUD BOLTS C/W 2 NUTS 90mm LONG	8	ASTM A 193 Gr. B7 CADMIUM PLATED ASTM A 194 Gr. 2H CADMIUM PLATED	C1	

NOTES:

1. ALL DIMENSIONS ARE IN MM UNLESS OTHERWISE STATED.
2. ALL DIMENSIONS, ELEVATIONS AND ORIENTATIONS TO BE VERIFIED BY THE CONTRACTOR BEFORE UNDERTAKING ANY KIND OF FABRICATION,CONSTRUCTION AND INSTALLATION WORK AT SITE.
3. ELEVATION TO BE ADJUST AS PER SITE REQUIREMENT.
4. PROVISION FOR POUR POINT DEPRESSANT INJECTION.
5. PROVISION FOR FUTURE CONNECTION.
6. PROVISION FOR TEST SEPARATOR.

REV.	DATE	DESCRIPTION	DRAWN	CHK'D	APP'VD	APP'VD
0	17/03/20	ISSUED FOR REVIEW	NU	SAR		
			CONSULTANT			CLIENT

PETROCHEMICAL ENGINEERING CONSULTANTS
C-2, BLOCK NO. 17, GULSHAN-E-IQBAL, NEAR NATIONAL STADIUM, KARACHI-75300. PAKISTAN.
TEL. +92 (21) 34827780, 34961088, FAX: +92 21 34961089, E-Mail: contact@pcec.com.pk web site: www.pcec.com.pk

CLIENT: OIL & GAS DEVELOPMENT COMPANY LTD.

PROJECT : DESIGN OF PANDHI TIE-IN AT SINJHORO PLANT

TITLE : PIPING ISOMETRIC
SINJHORO PLANT
LINE No. 6"-GP-101-C1

DRAWING NO.	SHEET NO.	OF	SCALE	REV.
0604246-ISO-001	1	1	N.T.S. A3	0

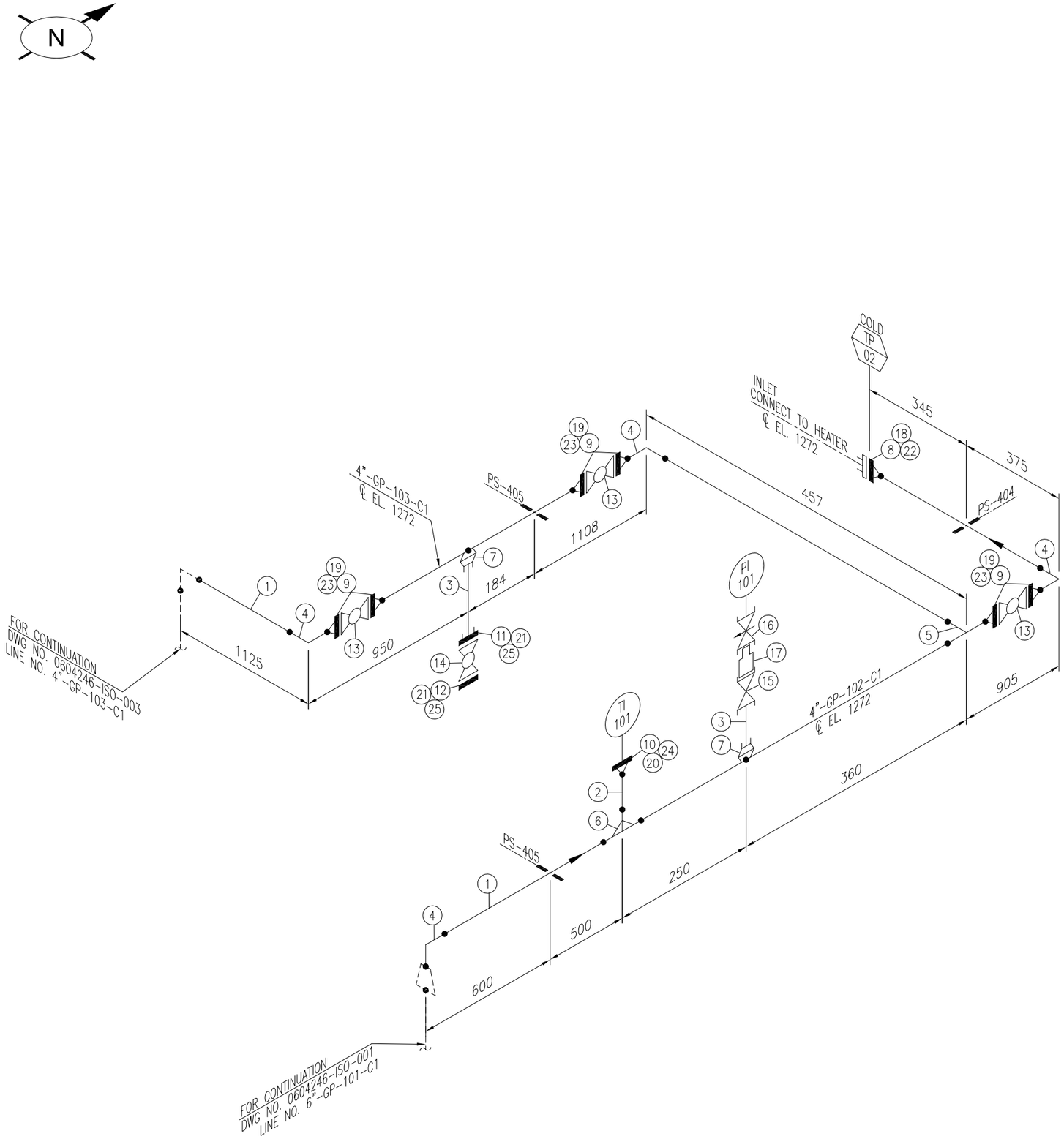

Sr. NO.	SIZE	DESCRIPTION	QTY.	MATERIAL	(MAT. SPEC)	REMARKS
1	4"	PIPE SCH.80 BE SMLS	4.1M	ASTM A-106 GR.B	C1	
2	2"	PIPE SCH.160 PE SMLS	0.1M	ASTM A-106 GR.B	C1	
3	3/4"	PIPE SCH.160 PE SMLS	0.2M	ASTM A-106 GR.B	C1	
4	4"	ELBOW 90° LR SCH.80 BW	4	ASTM A-234 Gr. WPB	C1	
5	4"	EQUAL TEE SCH.80 BW	1	ASTM A-234 Gr. WPB	C1	
6	4"x2"	RED. TEE SCH.80x160 BW	1	ASTM A-234 Gr. WPB	C1	
7	4"X3/4"	SOCKOLET, 3000# SW	2	ASTM A-105	C1	
8	4"	W.N. FLANGE RTJ. SCH.80 BW 900#.	1	ASTM A-105	–	
9	4"	W.N. FLANGE RTJ. SCH.80 BW 600#.	6	ASTM A-105	C1	
10	2"	W.N. FLANGE RTJ. SCH.160 BW 600#.	1	ASTM A-105	C1	
11	3/4"	S.W FLANGE RTJ. 600#.	1	ASTM A-105	C1	
12	3/4"	BLIND FLANGE RTJ. 600#.	1	ASTM A-105	C1	
13	4"	BALL VALVE RTJ. 600#.	3	SEE TAG NO. VB-105	C1	
14	3/4"	BALL VALVE RTJ. 600#.	1	SEE TAG NO. VB-104	C1	
15	3/4"	GATE VALVE 800#	1	SEE TAG NO. VG-100	C1	
16	1/2"	NEEDLE VALVE 800#	1	–	–	
17	3/4"X1/2"	REDUCING HEX NIPPLE 3000# NPT	1	–	–	
18	4"	OCTAGONAL RING, 900# R-37	1	316L S.S.	–	
19	4"	OCTAGONAL RING, 600# R-37	6	316L S.S.	C1	
20	2"	OCTAGONAL RING, 600# R-23	1	316L S.S.	C1	
21	3/4"	OCTAGONAL RING, 600# R-13	2	316L S.S.	C1	
22	1 1/8"	LG STUD BOLTS C/W 2 NUTS 170mm LONG	8	ASTM A 193 Gr. B7 CADMIUM PLATED ASTM A 194 Gr. 2H CADMIUM PLATED	–	
23	7/8"	LG STUD BOLTS C/W 2 NUTS 145mm LONG	48	ASTM A 193 Gr. B7 CADMIUM PLATED ASTM A 194 Gr. 2H CADMIUM PLATED	C1	
24	5/8"	LG STUD BOLTS C/W 2 NUTS 110mm LONG	8	ASTM A 193 Gr. B7 CADMIUM PLATED ASTM A 194 Gr. 2H CADMIUM PLATED	C1	
25	5/8"	LG STUD BOLTS C/W 2 NUTS 90mm LONG	8	ASTM A 193 Gr. B7 CADMIUM PLATED ASTM A 194 Gr. 2H CADMIUM PLATED	C1	

NOTES:

1. ALL DIMENSIONS ARE IN MM UNLESS OTHERWISE STATED.
2. ALL DIMENSIONS, ELEVATIONS AND ORIENTATIONS TO BE VERIFIED BY THE CONTRACTOR BEFORE UNDERTAKING ANY KIND OF FABRICATION,CONSTRUCTION AND INSTALLATION WORK AT SITE.

REV.	DATE	DESCRIPTION	DRAWN	CHK'D	APP'VD	APP'VD
0	17/03/20	ISSUED FOR REVIEW	NU	SAR		
			CONSULTANT			CLIENT

PETROCHEMICAL ENGINEERING CONSULTANTS
C-2, BLOCK NO. 17, GULSHAN-E-IQBAL, NEAR NATIONAL STADIUM, KARACHI-75300. PAKISTAN.
TEL +92 (21) 34827780, 34961088, FAX: +92 21 34961089, E-Mail: contact@pcec.com.pk web site: www.pcec.com.pk

CLIENT: OIL & GAS DEVELOPMENT COMPANY LTD.

PROJECT : DESIGN OF PANDHI TIE-IN AT SINJHORO PLANT

TITLE : PIPING ISOMETRIC
SINJHORO PLANT
LINE No. 4"-GP-102-C1 / 4"-GP-103-C1

DRAWING NO.	SHEET		SCALE	REV.
	NO.	OF	N.T.S.	
0604246-ISO-002	1	1	A3	0

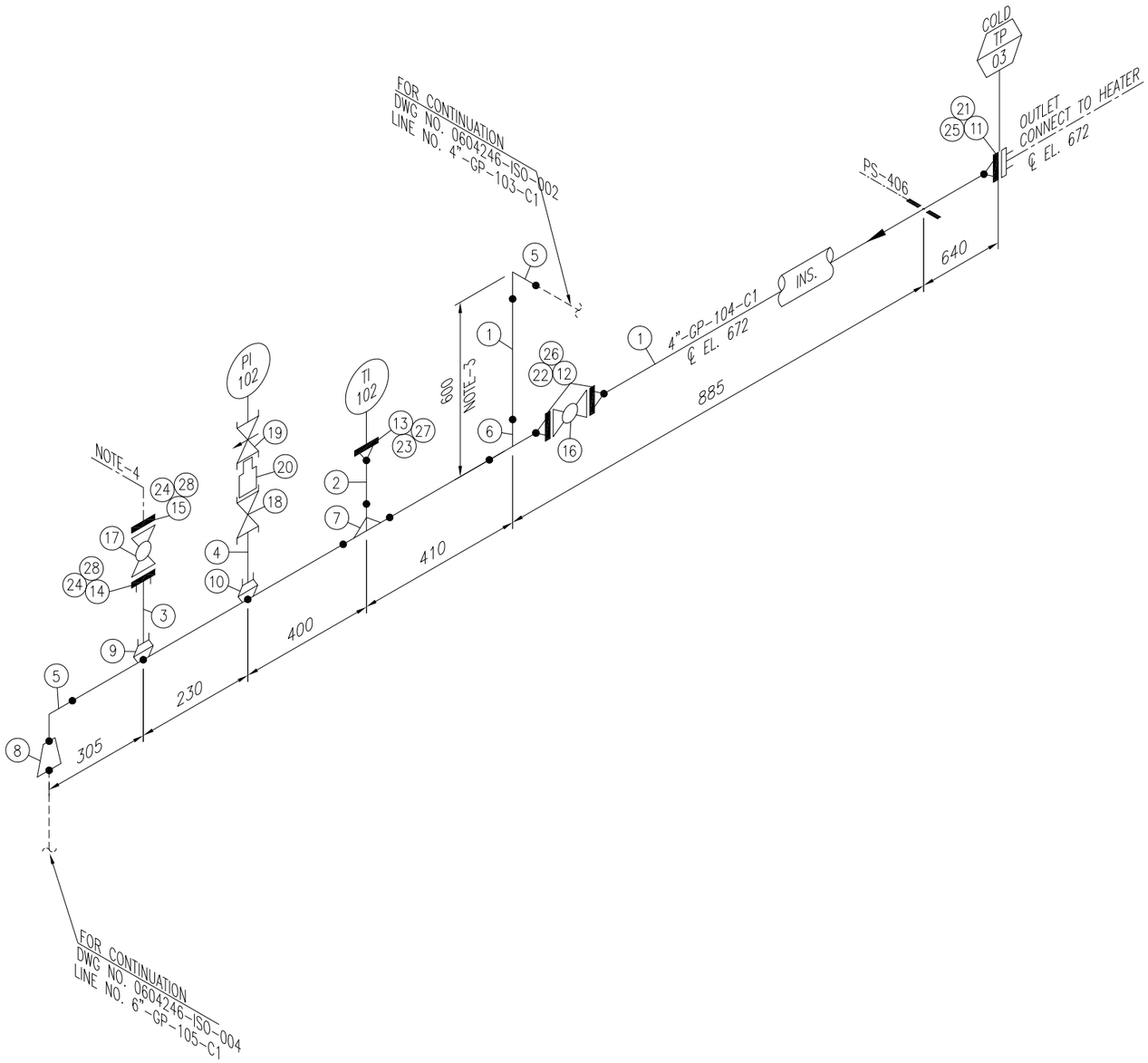

Sr. NO.	SIZE	DESCRIPTION	QTY.	MATERIAL	(MAT. SPEC)	REMARKS
1	4"	PIPE SCH.80 BE SMLS	2.1M	ASTM A-106 GR.B	C1	
2	2"	PIPE SCH.160 PE SMLS	0.1M	ASTM A-106 GR.B	C1	
3	1"	PIPE SCH.160 PE SMLS	0.2M	ASTM A-106 GR.B	C1	
4	3/4"	PIPE SCH.160 PE SMLS	0.2M	ASTM A-106 GR.B	C1	
5	4"	ELBOW 90° LR SCH.80 BW	2	ASTM A-234 Gr. WPB	C1	
6	4"	EQUAL TEE SCH.80 BW	1	ASTM A-234 Gr. WPB	C1	
7	4"x2"	RED. TEE SCH.80x160 BW	1	ASTM A-234 Gr. WPB	C1	
8	6"x4"	CONC REDUCER SCH.80 BW	1	ASTM A-234 Gr. WPB	C1	
9	4"X1"	SOCKOLET, 3000# SW	1	ASTM A-105	C1	
10	4"X3/4"	SOCKOLET, 3000# SW	1	ASTM A-105	C1	
11	4"	W.N. FLANGE RTJ. SCH.80 BW 900#.	1	ASTM A-105	-	
12	4"	W.N. FLANGE RTJ. SCH.80 BW 600#.	2	ASTM A-105	C1	
13	2"	W.N. FLANGE RTJ. SCH.160 BW 600#.	1	ASTM A-105	C1	
14	1"	S.W FLANGE RTJ. 600#.	1	ASTM A-105	C1	
15	1"	BLIND FLANGE RTJ. 600#.	1	ASTM A-105	C1	
16	4"	BALL VALVE RTJ. 600#.	1	SEE TAG NO. VB-105	C1	
17	1"	BALL VALVE RTJ. 600#.	1	SEE TAG NO. VB-104	C1	
18	3/4"	GATE VALVE 800#	1	SEE TAG NO. VG-100	C1	
19	1/2"	NEEDLE VALVE 800#	1	-	-	
20	3/4"X1/2"	REDUCING HEX NIPPLE 3000# NPT	1	-	-	
21	4"	OCTAGONAL RING, 900# R-37	1	316L S.S.	-	
22	4"	OCTAGONAL RING, 600# R-37	2	316L S.S.	C1	
23	2"	OCTAGONAL RING, 600# R-23	1	316L S.S.	C1	
24	1"	OCTAGONAL RING, 600# R-16	2	316L S.S.	C1	
25	1 1/8"	LG STUD BOLTS C/W 2 NUTS 170mm LONG	8	ASTM A 193 Gr. B7 CADMIUM PLATED ASTM A 194 Gr. 2H CADMIUM PLATED	-	
26	7/8"	LG STUD BOLTS C/W 2 NUTS 145mm LONG	16	ASTM A 193 Gr. B7 CADMIUM PLATED ASTM A 194 Gr. 2H CADMIUM PLATED	C1	
27	5/8"	LG STUD BOLTS C/W 2 NUTS 110mm LONG	8	ASTM A 193 Gr. B7 CADMIUM PLATED ASTM A 194 Gr. 2H CADMIUM PLATED	C1	
28	5/8"	LG STUD BOLTS C/W 2 NUTS 90mm LONG	8	ASTM A 193 Gr. B7 CADMIUM PLATED ASTM A 194 Gr. 2H CADMIUM PLATED	C1	

NOTES:

1. ALL DIMENSIONS ARE IN MM UNLESS OTHERWISE STATED.
2. ALL DIMENSIONS, ELEVATIONS AND ORIENTATIONS TO BE VERIFIED BY THE CONTRACTOR BEFORE UNDERTAKING ANY KIND OF FABRICATION,CONSTRUCTION AND INSTALLATION WORK AT SITE.
3. ELEVATION TO BE ADJUST AS PER SITE REQUIREMENT.
4. PROVISION FOR POUR POINT DEPRESSANT INJECTION.

REV.	DATE	DESCRIPTION	DRAWN	CHK'D	APP'VD	APP'VD
0	17/03/20	ISSUED FOR REVIEW	NU	SAR		
			CONSULTANT			CLIENT

PETROCHEMICAL ENGINEERING CONSULTANTS
C-2, BLOCK NO. 17, GULSHAN-E-IQBAL, NEAR NATIONAL STADIUM, KARACHI-75300. PAKISTAN.
TEL. +92 (21) 34827780, 34961088, FAX: +92 21 34961089, E-Mail: contact@pcec.com.pk web site: www.pcec.com.pk

CLIENT: OIL & GAS DEVELOPMENT COMPANY LTD.

PROJECT : DESIGN OF PANDHI TIE-IN AT SINJHORO PLANT

TITLE : PIPING ISOMETRIC
SINJHORO PLANT
LINE No. 4"-GP-104-C1

DRAWING NO.	SHEET NO.	OF	SCALE	REV.
0604246-ISO-003	1	1	N.T.S. A3	0

Sr. NO.	SIZE	DESCRIPTION	QTY.	MATERIAL	(MAT. SPEC)	REMARKS
1	6"	PIPE SCH.80 BE SMLS	48M	ASTM A-106 GR.B	C1	
2	6"	ELBOW 90° LR SCH.80 BW	5	ASTM A-234 Gr. WPB	C1	
3	8"x6"	CONC REDUCER SCH.80 BW	1	ASTM A-234 Gr. WPB	C1	
4	8"	W.N. FLANGE RTJ. SCH.80 BW 600#.	1	ASTM A-105	C1	
5	8"	OCTAGONAL RING, 600# R-49	1	316L S.S.	C1	
6	1 1/8"	LG STUD BOLTS C/W 2 NUTS 195mm LONG	12	ASTM A 193 Gr. B7 CADMIUM PLATED ASTM A 194 Gr. 2H CADMIUM PLATED	C1	

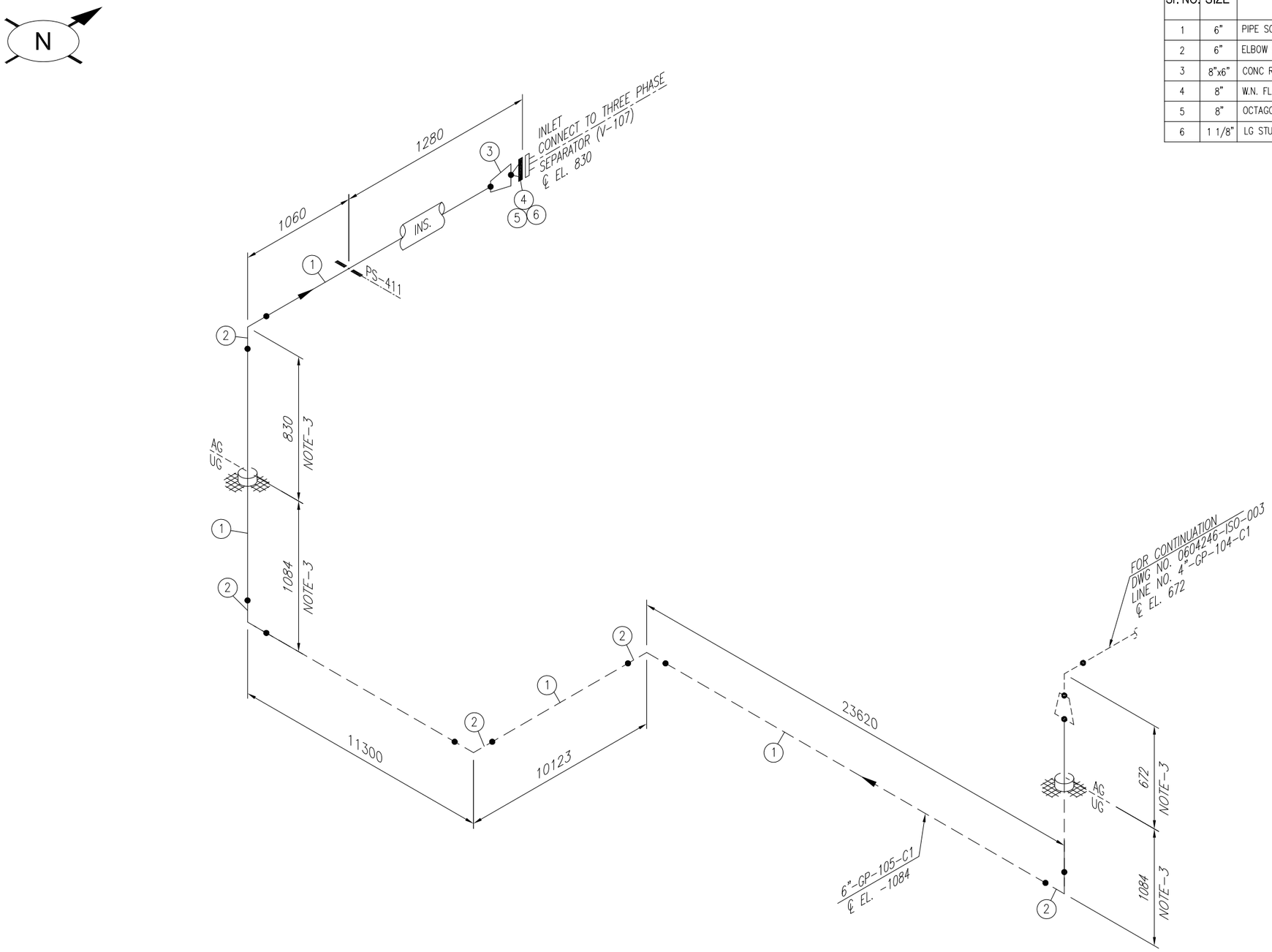

NOTES:

1. ALL DIMENSIONS ARE IN MM UNLESS OTHERWISE STATED.
2. ALL DIMENSIONS, ELEVATIONS AND ORIENTATIONS TO BE VERIFIED BY THE CONTRACTOR BEFORE UNDERTAKING ANY KIND OF FABRICATION,CONSTRUCTION AND INSTALLATION WORK AT SITE.
3. ELEVATION TO BE ADJUST AS PER SITE REQUIREMENT.

REV.	DATE	DESCRIPTION	DRAWN	CHK'D	APP'VD	APP'VD
0	17/03/20	ISSUED FOR REVIEW	NU	SAR		
			CONSULTANT			CLIENT

PETROCHEMICAL ENGINEERING CONSULTANTS
C-2, BLOCK NO. 17, GULSHAN-E-IQBAL, NEAR NATIONAL STADIUM, KARACHI-75300. PAKISTAN.
TEL. +92 (21) 34827780, 34961088, FAX: +92 21 34961089, E-Mail: contact@pcec.com.pk web site: www.pcec.com.pk

CLIENT: OIL & GAS DEVELOPMENT COMPANY LTD.

PROJECT : DESIGN OF PANDHI TIE-IN AT SINJHORO PLANT

TITLE : PIPING ISOMETRIC
SINJHORO PLANT
LINE No. 6"-GP-105-C1

DRAWING NO.	SHEET NO.	OF	SCALE	REV.
0604246-ISO-004	1	1	N.T.S. A3	0

Sr. NO.	SIZE	DESCRIPTION	QTY.	MATERIAL	(MAT. SPEC)	REMARKS
1	4"	PIPE SCH.40 BE SMLS	69.7M	ASTM A-106 GR.B	A1	
2	3/4"	PIPE SCH.80 PE SMLS	4.1M	ASTM A-106 GR.B	A1	
3	4"	ELBOW 90° LR SCH.40 BW	10	ASTM A-234 Gr. WPB	A1	
4	3/4"	ELBOW 90° LR 3000# SW	2	ASTM A-105	A1	
5	4"x3"	RED. TEE SCH.40 BW	1	ASTM A-234 Gr. WPB	A1	
6	4"X3/4"	SOCKOLET, 3000# SW	1	ASTM A-105	A1	
7	4"	W.N. FLANGE RF. SCH.40 BW 150#.	2	ASTM A-105	A1	
8	3/4"	S.W. FLANGE RF. 150#.	1	ASTM A-105	A1	
9	3/4"	BLIND FLANGE RF. 150#.	1	ASTM A-105	A1	
10	3/4"	BALL VALVE 150#	1	SEE TAG NO. VB-100	A1	
11	4"	GASKET 150# 3mm THICK COMPRESSED GRAPHITE FILLED , SPIRAL WOUND 304 SS CENTRAL RING AS PER ASME B-16.20	2	304 S.S.	A1	
12	3/4"	GASKET 150# 3mm THICK COMPRESSED GRAPHITE FILLED , SPIRAL WOUND 304 SS CENTRAL RING AS PER ASME B-16.20	2	304 S.S.	A1	
13	5/8"	LG STUD BOLTS C/W 2 NUTS 90mm LONG	16	ASTM A 193 Gr. B7M CADMIUM PLATED ASTM A 194 Gr. 2HM CADMIUM PLATED	A1	
14	1/2"	LG STUD BOLTS C/W 2 NUTS 65mm LONG	8	ASTM A 193 Gr. B7M CADMIUM PLATED ASTM A 194 Gr. 2HM CADMIUM PLATED	A1	

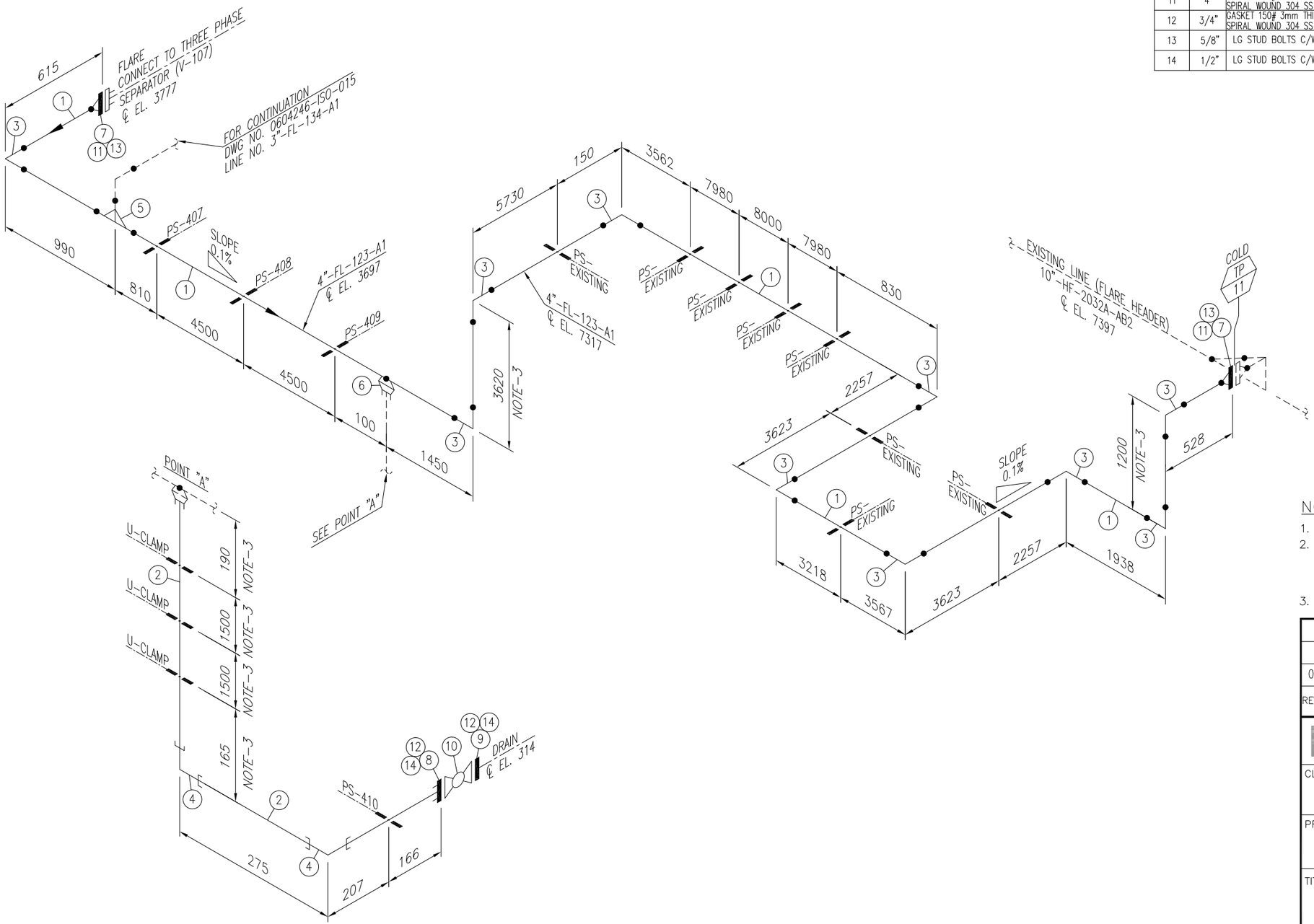

NOTES:

1. ALL DIMENSIONS ARE IN MM UNLESS OTHERWISE STATED.
2. ALL DIMENSIONS, ELEVATIONS AND ORIENTATIONS TO BE VERIFIED BY THE CONTRACTOR BEFORE UNDERTAKING ANY KIND OF FABRICATION,CONSTRUCTION AND INSTALLATION WORK AT SITE.
3. ELEVATION TO BE ADJUST AS PER SITE REQUIREMENT.

REV.	DATE	DESCRIPTION	DRAWN	CHK'D	APP'VD	APP'VD
0	17/03/20	ISSUED FOR REVIEW	NU	SAR		
			CONSULTANT			CLIENT

PETROCHEMICAL ENGINEERING CONSULTANTS
C-2, BLOCK NO. 17, GULSHAN-E-IQBAL, NEAR NATIONAL STADIUM, KARACHI-75300. PAKISTAN.
TEL. +92 (21) 34827780, 34961088, FAX: +92 21 34961089, E-Mail: contact@pcec.com.pk web site: www.pcec.com.pk

CLIENT: OIL & GAS DEVELOPMENT COMPANY LTD.

PROJECT : DESIGN OF PANDHI TIE-IN AT SINJHORO PLANT

TITLE : PIPING ISOMETRIC SINJHORO PLANT LINE No. 4"-FL-123-A1

DRAWING NO.	SHEET NO.	OF	SCALE	REV.
0604246-ISO-005	1	1	N.T.S. A3	0

Sr. NO.	SIZE	DESCRIPTION	QTY.	MATERIAL	(MAT. SPEC)	REMARKS
1	6"	PIPE SCH.80 BE SMLS	38.7M	ASTM A-106 GR.B	C1	
2	3/4"	PIPE SCH.160 PE SMLS	0.2M	ASTM A-106 GR.B	C1	
3	6"	ELBOW 90° LR SCH.80 BW	4	ASTM A-234 Gr. WPB	C1	
4	6"	ELBOW 45° LR SCH.80 BW	1	ASTM A-234 Gr. WPB	C1	
5	6"X3/4"	SOCKOLET, 3000# SW	1	ASTM A-105	C1	
6	3/4"	GATE VALVE 800#	1	SEE TAG NO. VG-100	C1	
7	1/2"	NEEDLE VALVE 800#	1	-	-	
8	3/4"X1/2"	REDUCING HEX NIPPLE 3000# NPT	1	-	-	
9	6"	W.N. FLANGE RTJ. SCH.80 BW 600#.	3	ASTM A-105	C1	
10	6"	OCTAGONAL RING, 600# R-45	2	316L S.S.	C1	
11	1"	LG STUD BOLTS C/W 2 NUTS 175mm LONG	24	ASTM A 193 Gr. B7 CADMIUM PLATED ASTM A 194 Gr. 2H CADMIUM PLATED	C1	

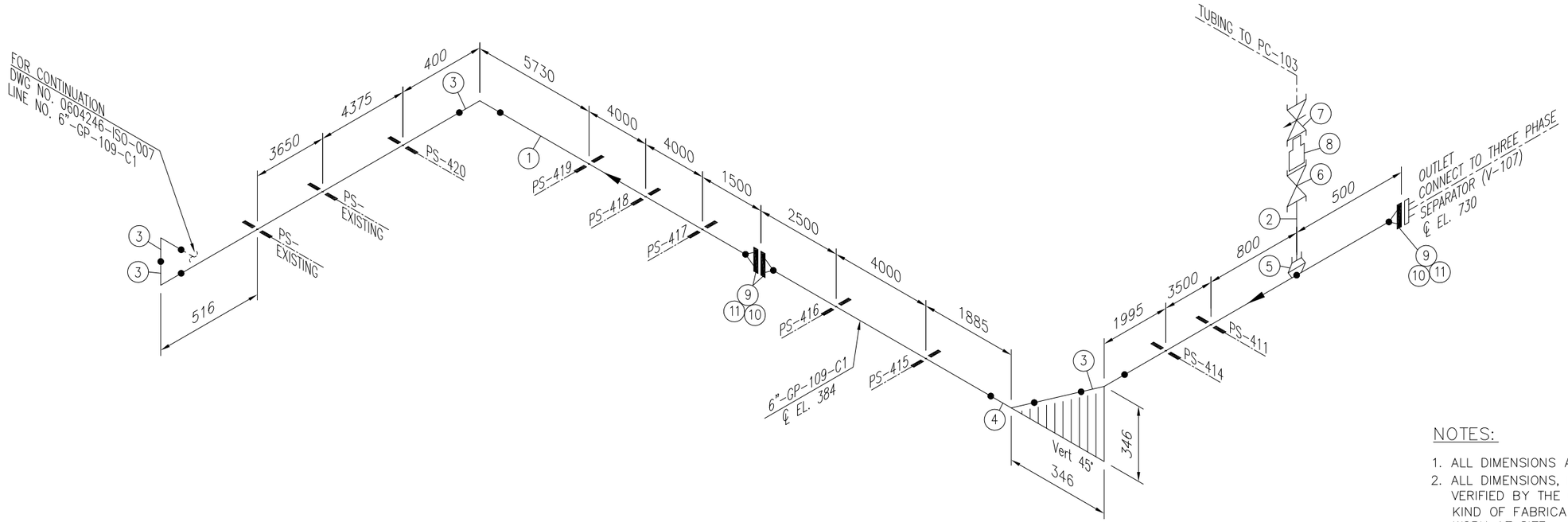

NOTES:

1. ALL DIMENSIONS ARE IN MM UNLESS OTHERWISE STATED.
2. ALL DIMENSIONS, ELEVATIONS AND ORIENTATIONS TO BE VERIFIED BY THE CONTRACTOR BEFORE UNDERTAKING ANY KIND OF FABRICATION,CONSTRUCTION AND INSTALLATION WORK AT SITE.

REV.	DATE	DESCRIPTION	DRAWN	CHK'D	APP'VD	APP'VD
0	17/03/20	ISSUED FOR REVIEW	NU	SHAH		
			CONSULTANT			CLIENT

PETROCHEMICAL ENGINEERING CONSULTANTS
C-2, BLOCK NO. 17, GULSHAN-E-IQBAL, NEAR NATIONAL STADIUM, KARACHI-75300. PAKISTAN.
TEL +92 (21) 34827780, 34961088, FAX: +92 21 34961089, E-Mail: contact@pcec.com.pk web site: www.pcec.com.pk

CLIENT: OIL & GAS DEVELOPMENT COMPANY LTD.

PROJECT : DESIGN OF PANDHI TIE-IN AT SINJHORO PLANT

TITLE : PIPING ISOMETRIC
SINJHORO PLANT
LINE No. 6"-GP-109-C1

DRAWING NO.	SHEET NO.	OF	SCALE	REV.
0604246-ISO-006	1	1	N.T.S. A3	0

Sr. NO.	SIZE	DESCRIPTION	QTY.	MATERIAL	(MAT. SPEC)	REMARKS
1	6"	PIPE SCH.80 BE SMLS	13.8M	ASTM A-106 GR.B	C1	
2	6"	ELBOW 90° LR SCH.80 BW	6	ASTM A-234 Gr. WPB	C1	
3	6"	ELBOW 45° LR SCH.80 BW	6	ASTM A-234 Gr. WPB	C1	
4	6"	EQUAL TEE SCH.80 BW	2	ASTM A-234 Gr. WPB	C1	
5	8"x6"	RED. TEE SCH.80 BW	1	ASTM A-234 Gr. WPB	C1	
6	6"	W.N. FLANGE RTJ. SCH.80 BW 600#.	6	ASTM A-105	C1	
7	6"	BALL VALVE RTJ. 600#.	3	SEE TAG NO. VB-106	C1	
8	6"	OCTAGONAL RING, 600# R-45	6	316L S.S.	C1	
9	1"	LG STUD BOLTS C/W 2 NUTS 175mm LONG	72	ASTM A 193 Gr. B7 CADMIUM PLATED ASTM A 194 Gr. 2H CADMIUM PLATED	C1	

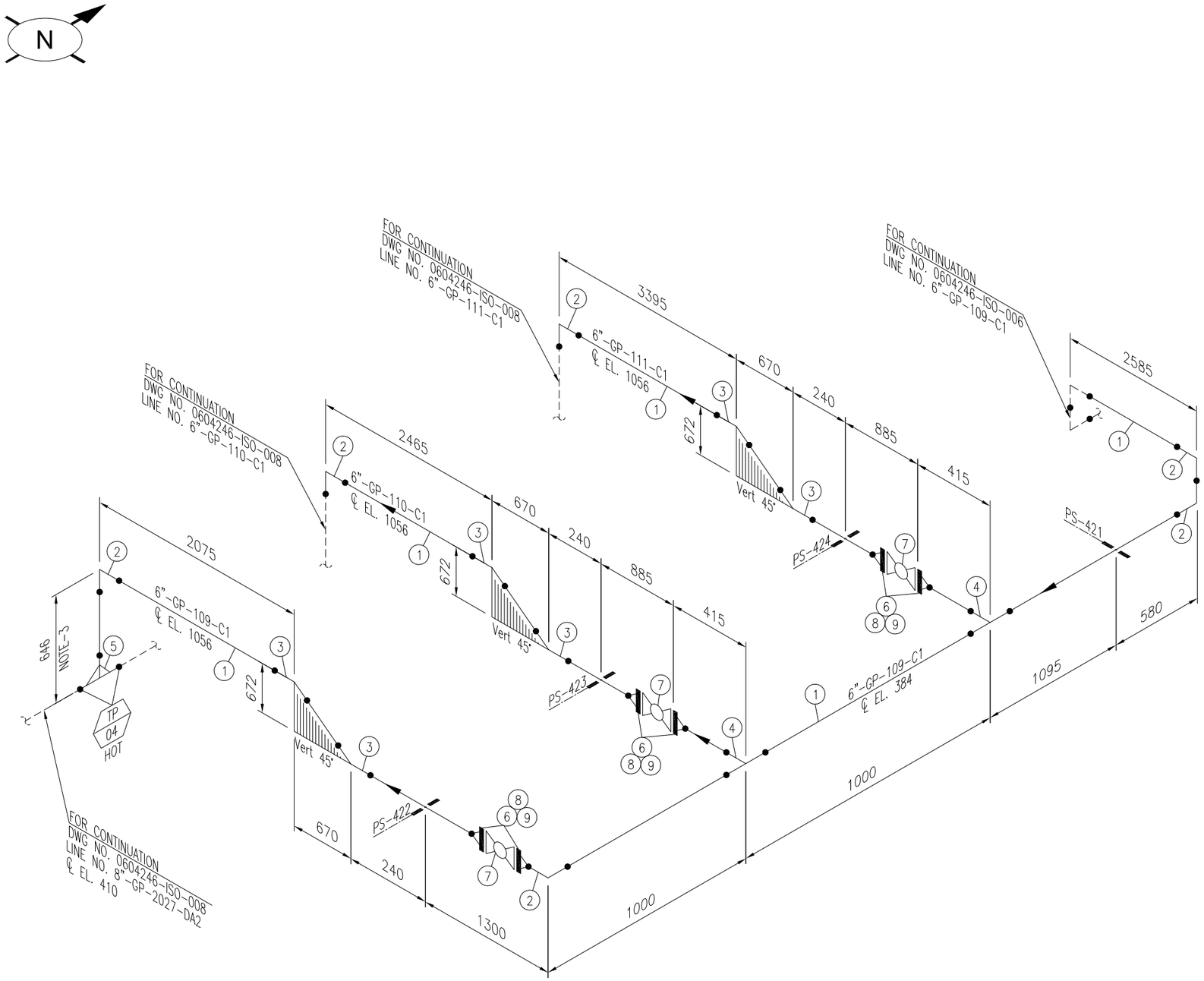

NOTES:

1. ALL DIMENSIONS ARE IN MM UNLESS OTHERWISE STATED.
2. ALL DIMENSIONS, ELEVATIONS AND ORIENTATIONS TO BE VERIFIED BY THE CONTRACTOR BEFORE UNDERTAKING ANY KIND OF FABRICATION,CONSTRUCTION AND INSTALLATION WORK AT SITE.
3. ELEVATION TO BE ADJUST AS PER SITE REQUIREMENT.

REV.	DATE	DESCRIPTION	DRAWN	CHK'D	APP'VD	APP'VD
0	17/03/20	ISSUED FOR REVIEW	NU	SHAH		
			CONSULTANT			CLIENT

PETROCHEMICAL ENGINEERING CONSULTANTS
C-2, BLOCK NO. 17, GULSHAN-E-IQBAL, NEAR NATIONAL STADIUM, KARACHI-75300. PAKISTAN.
TEL. +92 (21) 34827780, 34961088, FAX: +92 21 34961089, E-Mail: contact@pcec.com.pk web site: www.pcec.com.pk

CLIENT: OIL & GAS DEVELOPMENT COMPANY LTD.

PROJECT : DESIGN OF PANDHI TIE-IN AT SINJHORO PLANT

TITLE : PIPING ISOMETRIC
SINJHORO PLANT
LINE No. 6"-GP-109-C1 / 6"-GP-110-C1 / 6"-GP-111-C1

DRAWING NO.	SHEET NO.	OF	SCALE	REV.
0604246-ISO-007	1	1	N.T.S. A3	0

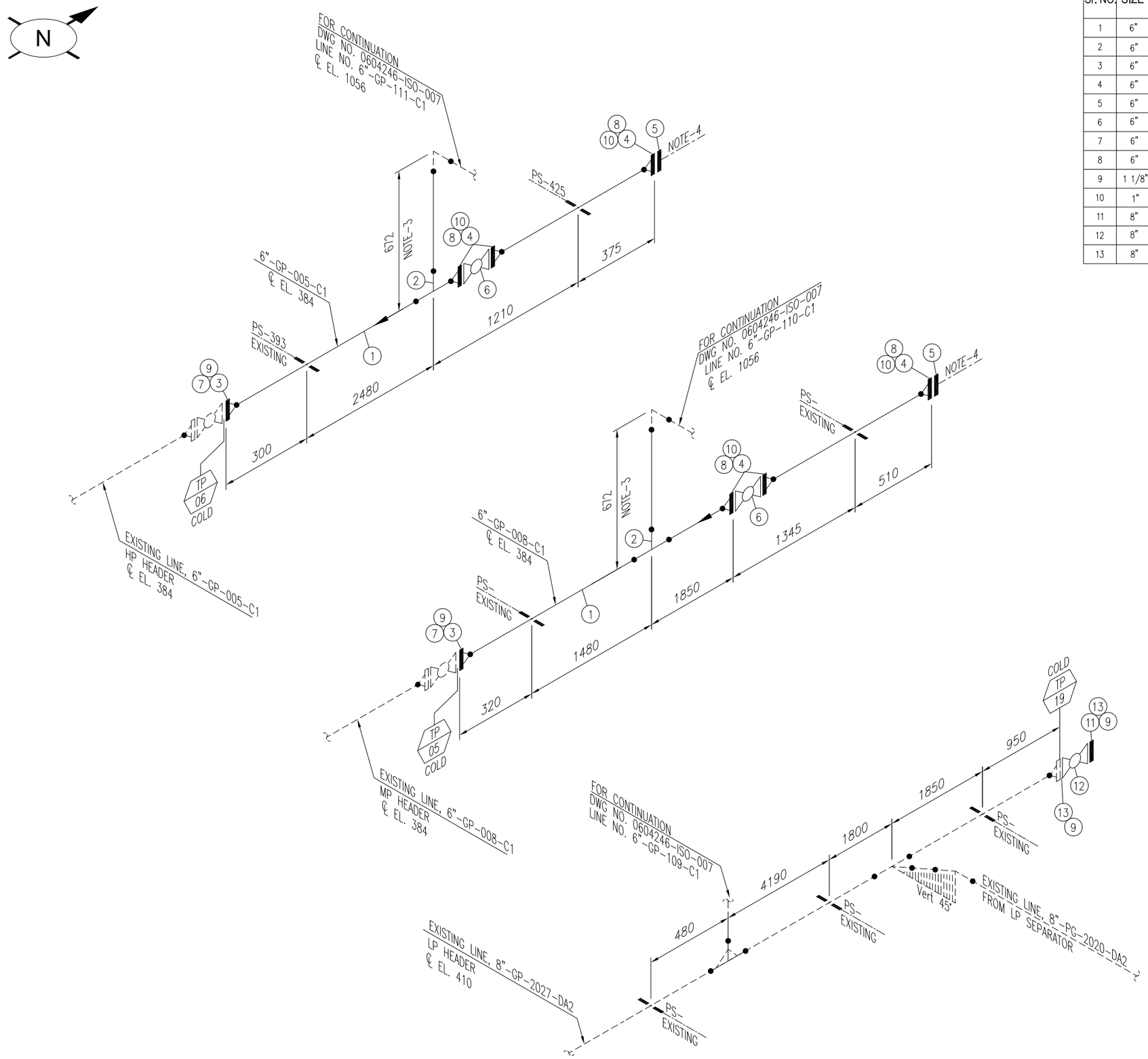

Sr. NO.	SIZE	DESCRIPTION	QTY.	MATERIAL	(MAT. SPEC)	REMARKS
1	6"	PIPE SCH.80 BE SMLS	7.9M	ASTM A-106 GR.B	C1	
2	6"	EQUAL TEE SCH.80 BW	2	ASTM A-234 Gr. WPB	C1	
3	6"	W.N. FLANGE RTJ. SCH.80 BW 900#.	2	ASTM A-105	–	
4	6"	W.N. FLANGE RTJ. SCH.80 BW 600#.	6	ASTM A-105	C1	
5	6"	BLIND FLANGE RTJ. 600#.	2	ASTM A-105	C1	
6	6"	BALL VALVE RTJ. 600#.	2	SEE TAG NO. VB-106	C1	
7	6"	OCTAGONAL RING, 900# R-45	2	316L S.S.	–	
8	6"	OCTAGONAL RING, 600# R-45	6	316L S.S.	C1	
9	1 1/8"	LG STUD BOLTS C/W 2 NUTS 195mm LONG	48	ASTM A 193 Gr. B7 CADMIUM PLATED ASTM A 194 Gr. 2H CADMIUM PLATED	–	
10	1"	LG STUD BOLTS C/W 2 NUTS 175mm LONG	72	ASTM A 193 Gr. B7 CADMIUM PLATED ASTM A 194 Gr. 2H CADMIUM PLATED	C1	
11	8"	BLIND FLANGE RTJ. 600#.	1	ASTM A-105	C1	
12	8"	BALL VALVE RTJ. 600#.	1	SEE TAG NO. VB-106	C1	
13	8"	OCTAGONAL RING, 600# R-49	2	316L S.S.	C1	

NOTES:

1. ALL DIMENSIONS ARE IN MM UNLESS OTHERWISE STATED.
2. ALL DIMENSIONS, ELEVATIONS AND ORIENTATIONS TO BE VERIFIED BY THE CONTRACTOR BEFORE UNDERTAKING ANY KIND OF FABRICATION,CONSTRUCTION AND INSTALLATION WORK AT SITE.
3. ELEVATION TO BE ADJUST AS PER SITE REQUIREMENT.
4. PROVISION FOR FUTURE CONNECTION.

REV.	DATE	DESCRIPTION	DRAWN	CHK'D	APP'VD	APP'VD
0	17/03/20	ISSUED FOR REVIEW	NU	SHAH		
			CONSULTANT			CLIENT

PETROCHEMICAL ENGINEERING CONSULTANTS
C-2, BLOCK NO. 17, GULSHAN-E-IQBAL, NEAR NATIONAL STADIUM, KARACHI-75300. PAKISTAN.
TEL. +92 (21) 34827780, 34961088, FAX: +92 21 34961089, E-Mail: contact@pcec.com.pk web site: www.pcec.com.pk

CLIENT: OIL & GAS DEVELOPMENT COMPANY LTD.

PROJECT : DESIGN OF PANDHI TIE-IN AT SINJHORO PLANT

TITLE : PIPING ISOMETRIC
SINJHORO PLANT
LINE No. 6"-GP-005-C1 / 6"-GP-008-C1

DRAWING NO.	SHEET		SCALE	REV.
	NO.	OF	N.T.S.	
0604246-ISO-008	1	1	A3	0

Sr. NO.	SIZE	DESCRIPTION	QTY.	MATERIAL	(MAT. SPEC)	REMARKS
25	1"	PIPE SCH.160 PE SMLS	0.2M	ASTM A-106 GR.B	C1	
26	2"X1"	SOCKOLET, 3000# SW	1	ASTM A-105	C1	
27	1"	S.W FLANGE RTJ. 600#.	1	ASTM A-105	C1	
28	1"	BLIND FLANGE RTJ. 600#.	1	ASTM A-105	C1	
29	1"	BALL VALVE RTJ. 600#.	1	SEE TAG NO. VB-104	C1	
30	1"	OCTAGONAL RING, 600# R-16	2	316L S.S.	C1	
31	5/8"	LG STUD BOLTS C/W 2 NUTS 90mm LONG	8	ASTM A 193 Gr. B7 CADMIUM PLATED ASTM A 194 Gr. 2H CADMIUM PLATED	C1	

Sr. NO.	SIZE	DESCRIPTION	QTY.	MATERIAL	(MAT. SPEC)	REMARKS
1	3"	PIPE SCH.80 BE SMLS	1.5M	ASTM A-106 GR.B	C1	
2	2"	PIPE SCH.160 PE SMLS	32.9M	ASTM A-106 GR.B	C1	
3	3"	ELBOW 90° LR SCH.80 BW	1	ASTM A-234 Gr. WPB	C1	
4	2"	ELBOW 90° LR SCH.160 BW	7	ASTM A-234 Gr. WPB	C1	
5	2"	EQUAL TEE SCH.160 BW	1	ASTM A-234 Gr. WPB	C1	
6	3"x2"	RED. TEE SCH.80 X SCH.160 BW	1	ASTM A-234 Gr. WPB	C1	
7	4"x2"	CONC REDUCER SCH.80 X SCH.160 BW	1	ASTM A-234 Gr. WPB	C1	
8	10"x2"	WELDOLET, BW SCH.80	1	ASTM A-234 Gr. WPB	C1	
9	4"	W.N. FLANGE RTJ. SCH.80 BW 600#.	1	ASTM A-105	C1	
10	3"	W.N. FLANGE R.F SCH.80 BW 300#.	1	ASTM A-105	–	
11	3"	W.N. FLANGE RTJ. SCH.80 BW 600#.	4	ASTM A-105	C1	
12	2"	W.N. FLANGE RTJ. SCH.160 BW 600#.	4	ASTM A-105	C1	
13	3"	GATE VALVE RTJ. 600#.	2	SEE TAG NO. VG-103	C1	
14	2"	GATE VALVE RTJ. 600#.	1	SEE TAG NO. VG-103	C1	
15	2"	WAFER CHECK VALVE RTJ. 600#.	1	SEE TAG NO. VC-103	C1	
16	4"	OCTAGONAL RING, 600# R-37	1	316L S.S.	C1	
17	3"	GASKET 300# 3mm THICK COMPRESSED GRAPHITE FILLED ; SPIRAL WOUND 304 SS CENTRAL RING AS PER ASME B-16.20	1	304 S.S.	–	
18	3"	OCTAGONAL RING, 600# R-31	4	316L S.S.	C1	
19	2"	OCTAGONAL RING, 600# R-23	4	316L S.S.	C1	
20	7/8"	LG STUD BOLTS C/W 2 NUTS 145mm LONG	8	ASTM A 193 Gr. B7 CADMIUM PLATED ASTM A 194 Gr. 2H CADMIUM PLATED	C1	
21	3/4"	LG STUD BOLTS C/W 2 NUTS 110mm LONG	8	ASTM A 193 Gr. B7 CADMIUM PLATED ASTM A 194 Gr. 2H CADMIUM PLATED	C1	
22	3/4"	LG STUD BOLTS C/W 2 NUTS 125mm LONG	32	ASTM A 193 Gr. B7 CADMIUM PLATED ASTM A 194 Gr. 2H CADMIUM PLATED	C1	
23	5/8"	LG STUD BOLTS C/W 2 NUTS 110mm LONG	16	ASTM A 193 Gr. B7 CADMIUM PLATED ASTM A 194 Gr. 2H CADMIUM PLATED	C1	
24	5/8"	LG STUD BOLTS C/W 2 NUTS 175mm LONG	8	ASTM A 193 Gr. B7 CADMIUM PLATED ASTM A 194 Gr. 2H CADMIUM PLATED	C1	

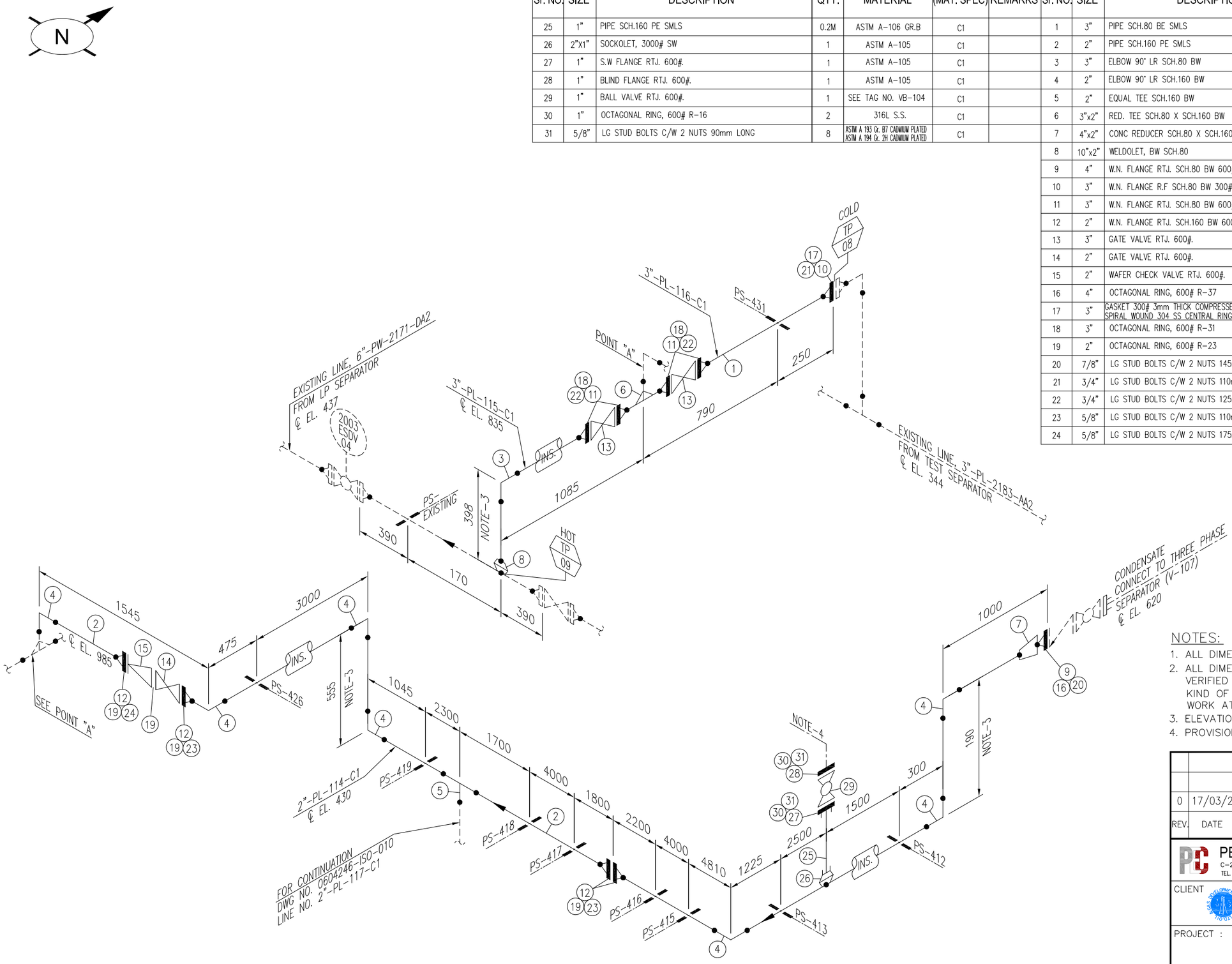

NOTES:

1. ALL DIMENSIONS ARE IN MM UNLESS OTHERWISE STATED.
2. ALL DIMENSIONS, ELEVATIONS AND ORIENTATIONS TO BE VERIFIED BY THE CONTRACTOR BEFORE UNDERTAKING ANY KIND OF FABRICATION,CONSTRUCTION AND INSTALLATION WORK AT SITE.
3. ELEVATION TO BE ADJUST AS PER SITE REQUIREMENT.
4. PROVISION FOR POUR POINT DEPRESSANT INJECTION.

REV.	DATE	DESCRIPTION	DRAWN	CHK'D	APP'VD	APP'VD
0	17/03/20	ISSUED FOR REVIEW	NU	SHAH		
			CONSULTANT			CLIENT

PETROCHEMICAL ENGINEERING CONSULTANTS
C-2, BLOCK NO. 17, GULSHAN-E-IQBAL, NEAR NATIONAL STADIUM, KARACHI-75300. PAKISTAN.
TEL. +92 (21) 34827780, 34961088, FAX: +92 21 34961089, E-Mail: contact@pcec.com.pk web site: www.pcec.com.pk

CLIENT: OIL & GAS DEVELOPMENT COMPANY LTD.

PROJECT : DESIGN OF PANDHI TIE-IN AT SINJHORO PLANT

TITLE : PIPING ISOMETRIC
SINJHORO PLANT
LINE No. 3"-PL-115-C1 / 3"-PL-116-C1 / 2"-PL-114-C1

DRAWING NO.	SHEET NO.	OF	SCALE	REV.
0604246-ISO-009	1	1	N.T.S. A3	0

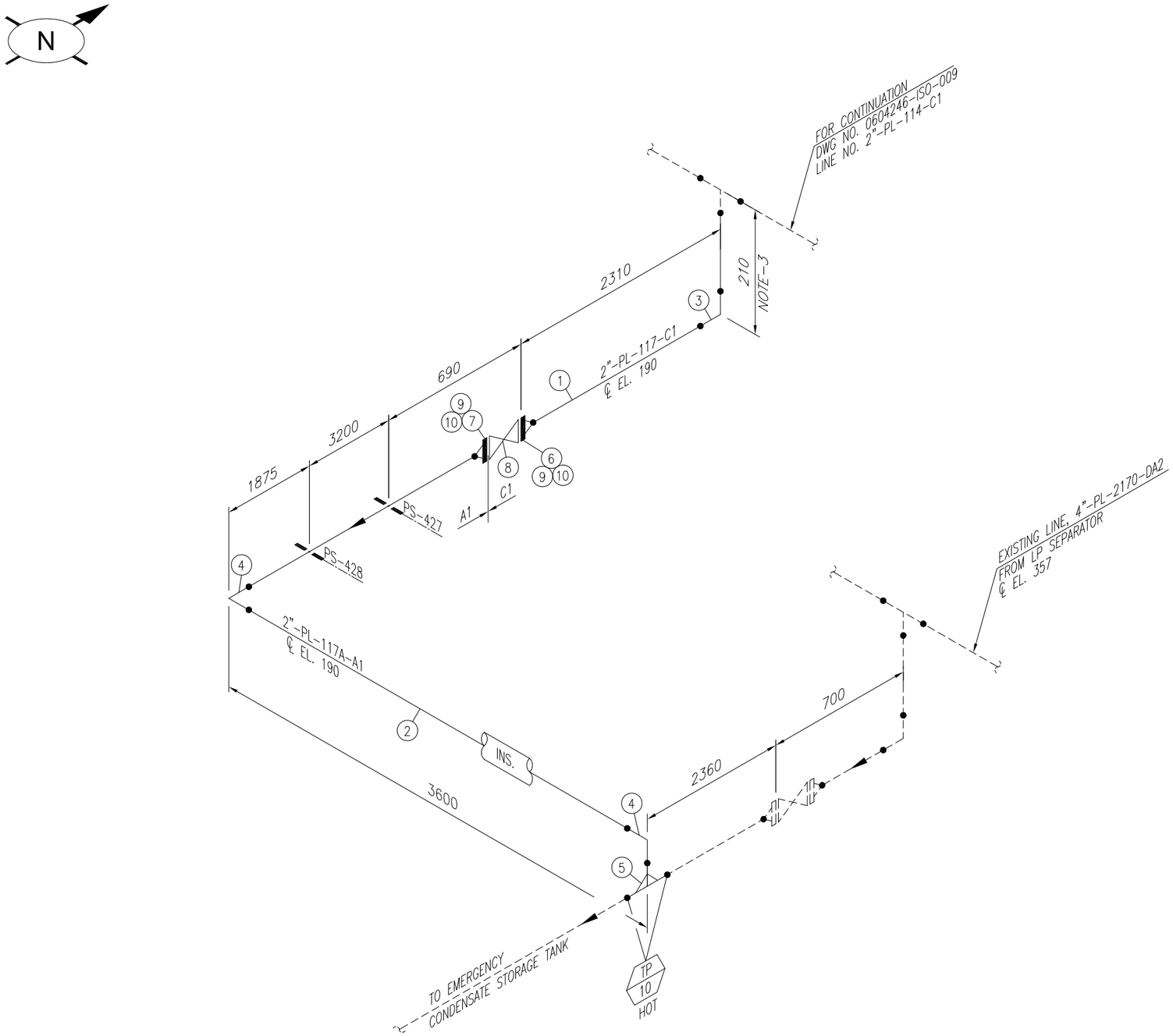

Sr. NO.	SIZE	DESCRIPTION	QTY.	MATERIAL	(MAT. SPEC)	REMARKS
1	2"	PIPE SCH.160 PE SMLS	2.2M	ASTM A-106 GR.B	C1	
2	2"	PIPE SCH.80 BE SMLS	8.8M	ASTM A-106 GR.B	A1	
3	2"	ELBOW 90° LR SCH.160 BW	1	ASTM A-234 Gr. WPB	C1	
4	2"	ELBOW 90° LR SCH.80 BW	2	ASTM A-234 Gr. WPB	A1	
5	4"x2"	RED. TEE SCH.80 BW	1	ASTM A-234 Gr. WPB	A1	
6	2"	W.N. FLANGE RTJ. SCH.160 BW 600#.	1	ASTM A-105	C1	
7	2"	W.N. FLANGE RTJ. SCH.80 BW 600#.	1	ASTM A-105	–	
8	2"	GATE VALVE RTJ. 600#.	1	SEE TAG NO. VG-103	C1	
9	2"	OCTAGONAL RING, 600# R-23	2	316L S.S.	C1	
10	5/8"	LG STUD BOLTS C/W 2 NUTS 110mm LONG	16	ASTM A 193 Gr. B7 CADMIUM PLATED ASTM A 194 Gr. 2H CADMIUM PLATED	C1	

NOTES:

1. ALL DIMENSIONS ARE IN MM UNLESS OTHERWISE STATED.
2. ALL DIMENSIONS, ELEVATIONS AND ORIENTATIONS TO BE VERIFIED BY THE CONTRACTOR BEFORE UNDERTAKING ANY KIND OF FABRICATION,CONSTRUCTION AND INSTALLATION WORK AT SITE.
3. ELEVATION TO BE ADJUST AS PER SITE REQUIREMENT.

REV.	DATE	DESCRIPTION	DRAWN	CHK'D	APP'VD	APP'VD
0	17/03/20	ISSUED FOR REVIEW	NU	SHAH		
			CONSULTANT			CLIENT

PETROCHEMICAL ENGINEERING CONSULTANTS
C-2, BLOCK NO. 17, GULSHAN-E-IQBAL, NEAR NATIONAL STADIUM, KARACHI-75300. PAKISTAN.
TEL. +92 (21) 34827780, 34961088, FAX: +92 21 34961089, E-Mail: contact@pcec.com.pk web site: www.pcec.com.pk

CLIENT: OIL & GAS DEVELOPMENT COMPANY LTD.

PROJECT : DESIGN OF PANDHI TIE-IN AT SINJHORO PLANT

TITLE : PIPING ISOMETRIC
SINJHORO PLANT
LINE No. 2"-PL-117-C1 / 2"-PL-117A-A1

DRAWING NO.	SHEET NO.	OF	SCALE	REV.
0604246-ISO-010	1	1	N.T.S. A3	0

Sr. NO.	SIZE	DESCRIPTION	QTY.	MATERIAL	(MAT. SPEC)	REMARKS
1	2"	PIPE SCH.80 BE SMLS	35.6M	ASTM A-106 GR.B	A1	
2	2"	ELBOW 90° LR SCH.80 BW	7	ASTM A-234 Gr. WPB	A1	
3	2"	ELBOW 45° LR SCH.80 BW	2	ASTM A-234 Gr. WPB	A1	
4	2"	W.N. FLANGE RTJ. SCH.80 BW 600#.	1	ASTM A-105	–	
5	2"	OCTAGONAL RING, 600# R-23	1	316L S.S.	–	
6	5/8"	LG STUD BOLTS C/W 2 NUTS 110mm LONG	8	ASTM A 193 Gr. B7 CADMIUM PLATED ASTM A 194 Gr. 2H CADMIUM PLATED	–	

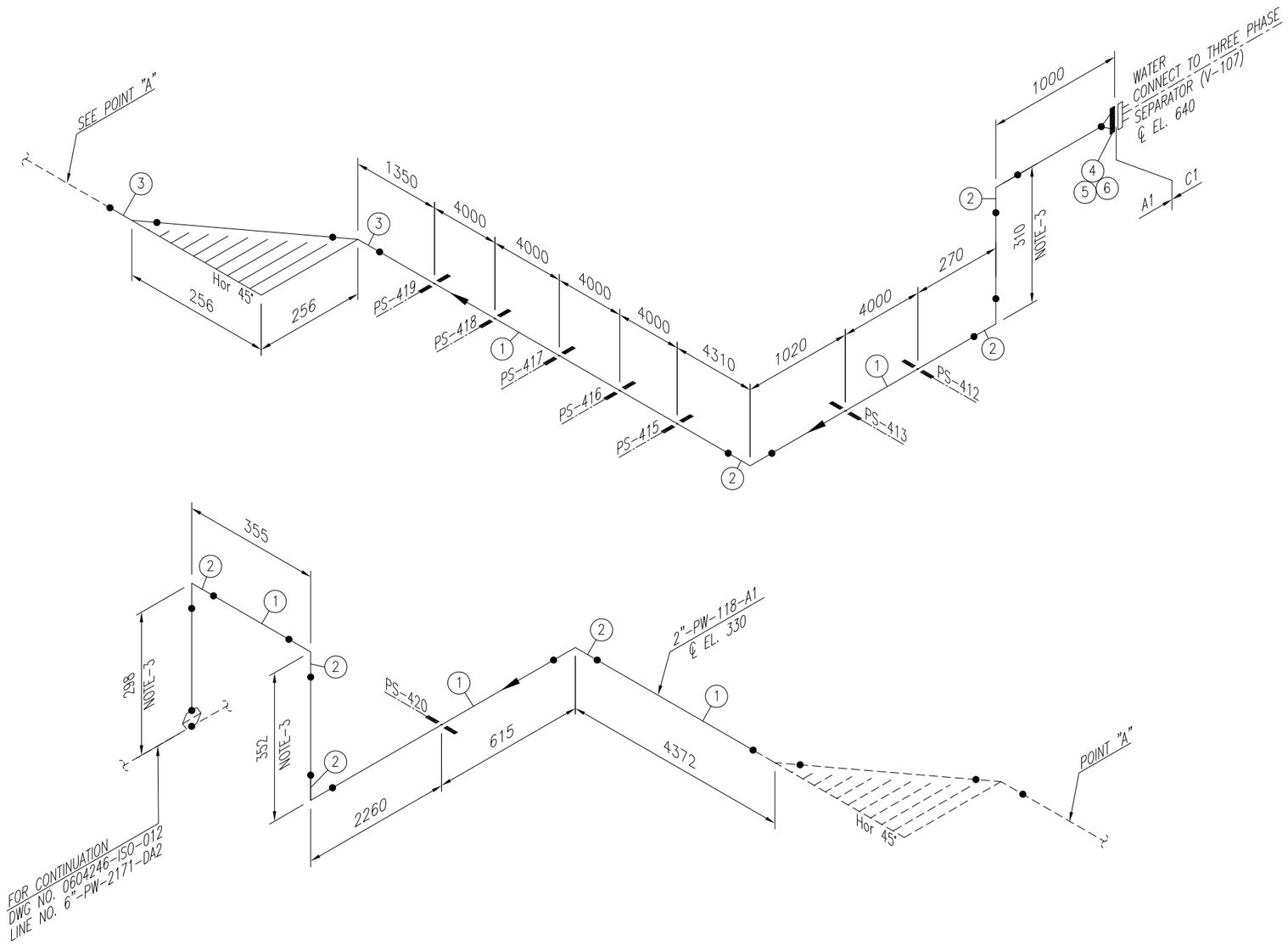

NOTES:

1. ALL DIMENSIONS ARE IN MM UNLESS OTHERWISE STATED.
2. ALL DIMENSIONS, ELEVATIONS AND ORIENTATIONS TO BE VERIFIED BY THE CONTRACTOR BEFORE UNDERTAKING ANY KIND OF FABRICATION,CONSTRUCTION AND INSTALLATION WORK AT SITE.
3. ELEVATION TO BE ADJUST AS PER SITE REQUIREMENT.

REV.	DATE	DESCRIPTION	DRAWN	CHK'D	APP'VD	APP'VD
0	17/03/20	ISSUED FOR REVIEW	NU	SHAH		
			CONSULTANT			CLIENT

PETROCHEMICAL ENGINEERING CONSULTANTS
C-2, BLOCK NO. 17, GULSHAN-E-IQBAL, NEAR NATIONAL STADIUM, KARACHI-75300. PAKISTAN.
TEL. +92 (21) 34827780, 34961088, FAX: +92 21 34961089, E-Mail: contact@pcec.com.pk web site: www.pcec.com.pk

CLIENT: OIL & GAS DEVELOPMENT COMPANY LTD.

PROJECT : DESIGN OF PANDHI TIE-IN AT SINJHORO PLANT

TITLE : PIPING ISOMETRIC SINJHORO PLANT LINE No. 2"-PW-118-A1

DRAWING NO.	SHEET NO.	OF	SCALE	REV.
0604246-ISO-011	1	1	N.T.S. A3	0

Sr. NO.	SIZE	DESCRIPTION	QTY.	MATERIAL	(MAT. SPEC)	REMARKS
1	6"	PIPE SCH.40 BE SMLS	0.7M	ASTM A-106 GR.B	A1	
2	6"x2"	WELDOLET, BW SCH.40 X SCH.80	1	ASTM A-234 Gr. WPB	A1	
3	6"	W.N. FLANGE RF. SCH.40 BW 150#.	2	ASTM A-105	A1	
4	6"	BLIND FLANGE RF. 150#.	1	ASTM A-105	A1	
5	6"	BALL VALVE RF. 150#	1	SEE TAG NO. VB-101	A1	
6	6"	GASKET 150# 3mm THICK COMPRESSED GRAPHITE FILLED ; SPIRAL WOUND 304 SS CENTRAL RING AS PER ASME B-16.20	3	304 S.S.	A1	
7	3/4"	LG STUD BOLTS C/W 2 NUTS 100mm LONG	24	ASTM A 193 Gr. B7M CADMIUM PLATED ASTM A 194 Gr. 2HM CADMIUM PLATED	A1	

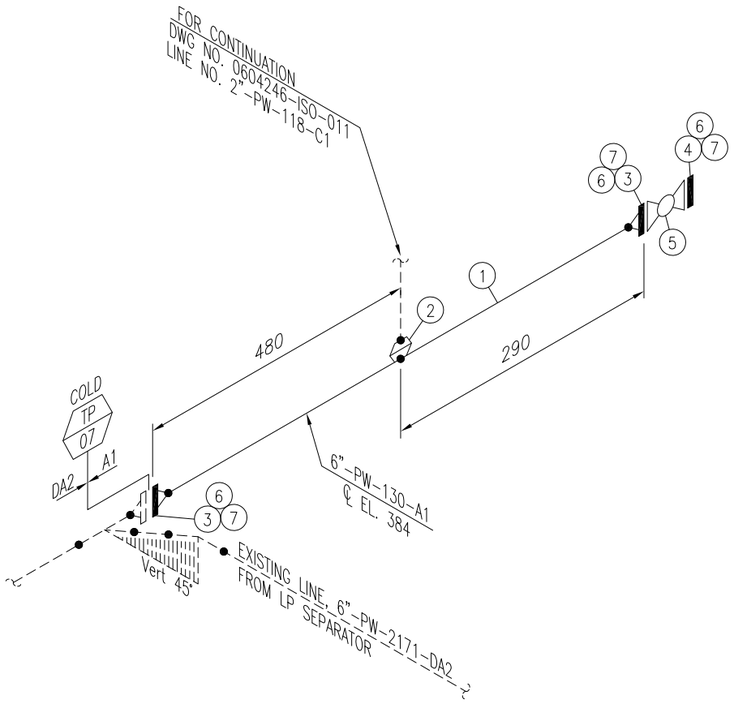

NOTES:

1. ALL DIMENSIONS ARE IN MM UNLESS OTHERWISE STATED.
2. ALL DIMENSIONS, ELEVATIONS AND ORIENTATIONS TO BE VERIFIED BY THE CONTRACTOR BEFORE UNDERTAKING ANY KIND OF FABRICATION,CONSTRUCTION AND INSTALLATION WORK AT SITE.
3. ELEVATION TO BE ADJUST AS PER SITE REQUIREMENT.

REV.	DATE	DESCRIPTION	DRAWN	CHK'D	APP'VD	APP'VD
0	17/03/20	ISSUED FOR REVIEW	NU	SHAH		
			CONSULTANT			CLIENT

PETROCHEMICAL ENGINEERING CONSULTANTS
C-2, BLOCK NO. 17, GULSHAN-E-IQBAL, NEAR NATIONAL STADIUM, KARACHI-75300. PAKISTAN.
TEL. +92 (21) 34827780, 34961088, FAX: +92 21 34961089, E-Mail: contact@pcec.com.pk web site: www.pcec.com.pk

CLIENT: OIL & GAS DEVELOPMENT COMPANY LTD.

PROJECT : DESIGN OF PANDHI TIE-IN AT SINJHORO PLANT

TITLE : PIPING ISOMETRIC
SINJHORO PLANT
LINE No. 6"-PW-130-A1 / 2"-PW-118A-A1

DRAWING NO.	SHEET NO.	OF	SCALE	REV.
0604246-ISO-012	1	1	N.T.S. A3	0

Sr. NO.	SIZE	DESCRIPTION	QTY.	MATERIAL	(MAT. SPEC)	REMARKS
1	2"	PIPE SCH.160 PE SMLS	15.5M	ASTM A-106 GR.B	C1	
2	3/4"	PIPE SCH.160 PE SMLS	0.2M	ASTM A-106 GR.B	C1	
3	2"	ELBOW 90° LR SCH.160 BW	4	ASTM A-234 Gr. WPB	C1	
4	2"	EQUAL TEE SCH.160 BW	1	ASTM A-234 Gr. WPB	C1	
5	2"X3/4"	SOCKOLET, 3000# SW	1	ASTM A-105	C1	
6	2"	W.N. FLANGE RTJ. SCH.160 BW 600#.	5	ASTM A-105	C1	
7	2"	GATE VALVE RTJ. 600#.	1	SEE TAG NO. VG-103	C1	
8	2"	WAFER CHECK VALVE RTJ. 600#.	1	SEE TAG NO. VC-103	C1	
9	3/4"	GATE VALVE 800#	1	SEE TAG NO. VG-100	C1	
10	2"	OCTAGONAL RING, 600# R-23	6	316L S.S.	C1	
11	5/8"	LG STUD BOLTS C/W 2 NUTS 110mm LONG	32	ASTM A 193 Gr. B7 CADMIUM PLATED ASTM A 194 Gr. 2H CADMIUM PLATED	C1	
12	5/8"	LG STUD BOLTS C/W 2 NUTS 175mm LONG	8	ASTM A 193 Gr. B7 CADMIUM PLATED ASTM A 194 Gr. 2H CADMIUM PLATED	C1	

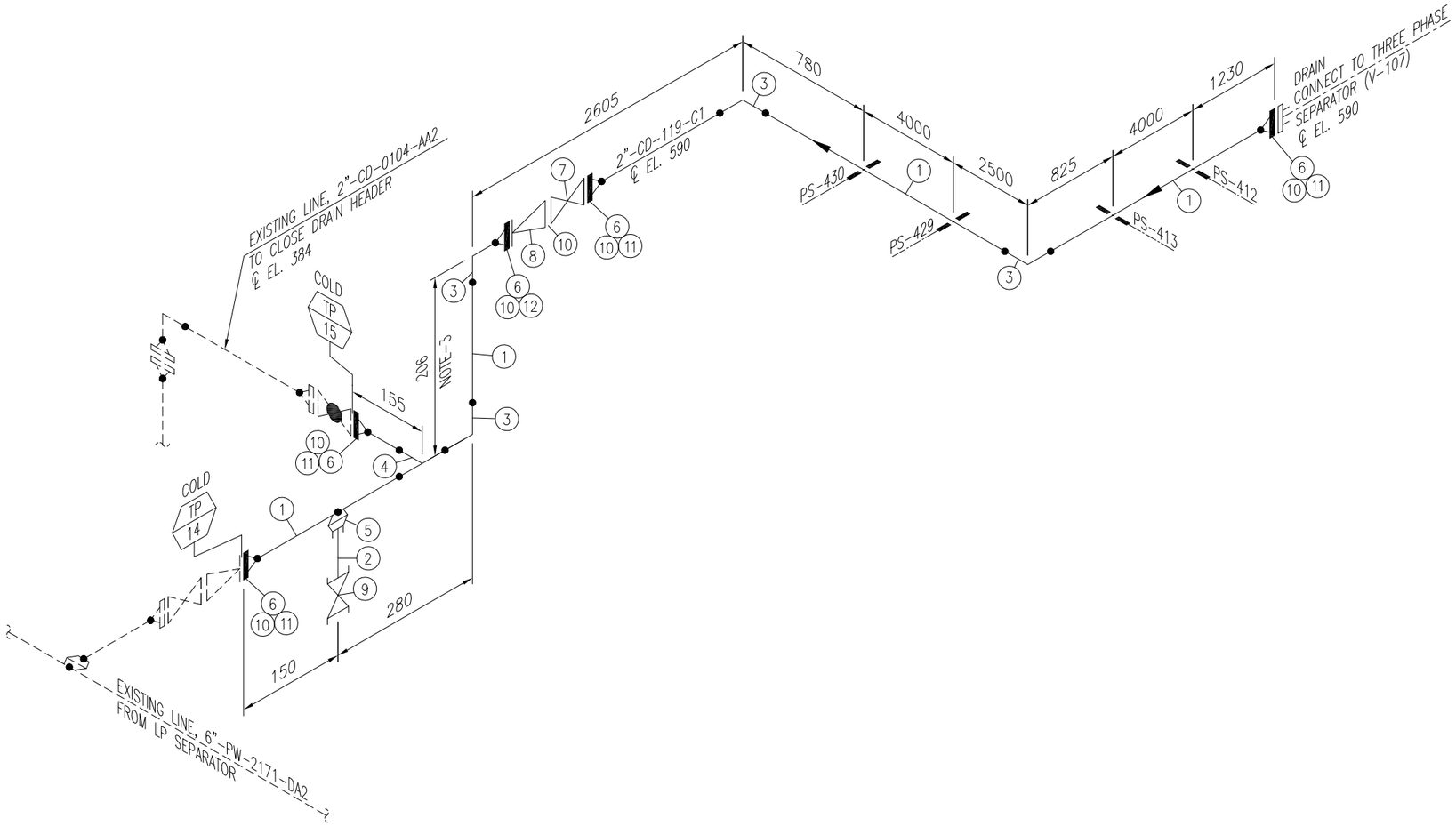

NOTES:

1. ALL DIMENSIONS ARE IN MM UNLESS OTHERWISE STATED.
2. ALL DIMENSIONS, ELEVATIONS AND ORIENTATIONS TO BE VERIFIED BY THE CONTRACTOR BEFORE UNDERTAKING ANY KIND OF FABRICATION,CONSTRUCTION AND INSTALLATION WORK AT SITE.
3. ELEVATION TO BE ADJUST AS PER SITE REQUIREMENT.

REV.	DATE	DESCRIPTION	DRAWN	CHK'D	APP'VD	APP'VD
0	17/03/20	ISSUED FOR REVIEW	NU	SHAH		
			CONSULTANT			CLIENT

PETROCHEMICAL ENGINEERING CONSULTANTS
C-2, BLOCK NO. 17, GULSHAN-E-IQBAL, NEAR NATIONAL STADIUM, KARACHI-75300. PAKISTAN.
TEL. +92 (21) 34827780, 34961088, FAX: +92 21 34961089, E-Mail: contact@pcec.com.pk web site: www.pcec.com.pk

CLIENT: OIL & GAS DEVELOPMENT COMPANY LTD.

PROJECT : DESIGN OF PANDHI TIE-IN AT SINJHORO PLANT

TITLE : PIPING ISOMETRIC
SINJHORO PLANT
LINE No. 2"-CD-119-C1

DRAWING NO.	SHEET NO.	OF	SCALE	REV.
0604246-ISO-013	1	1	N.T.S. A3	0

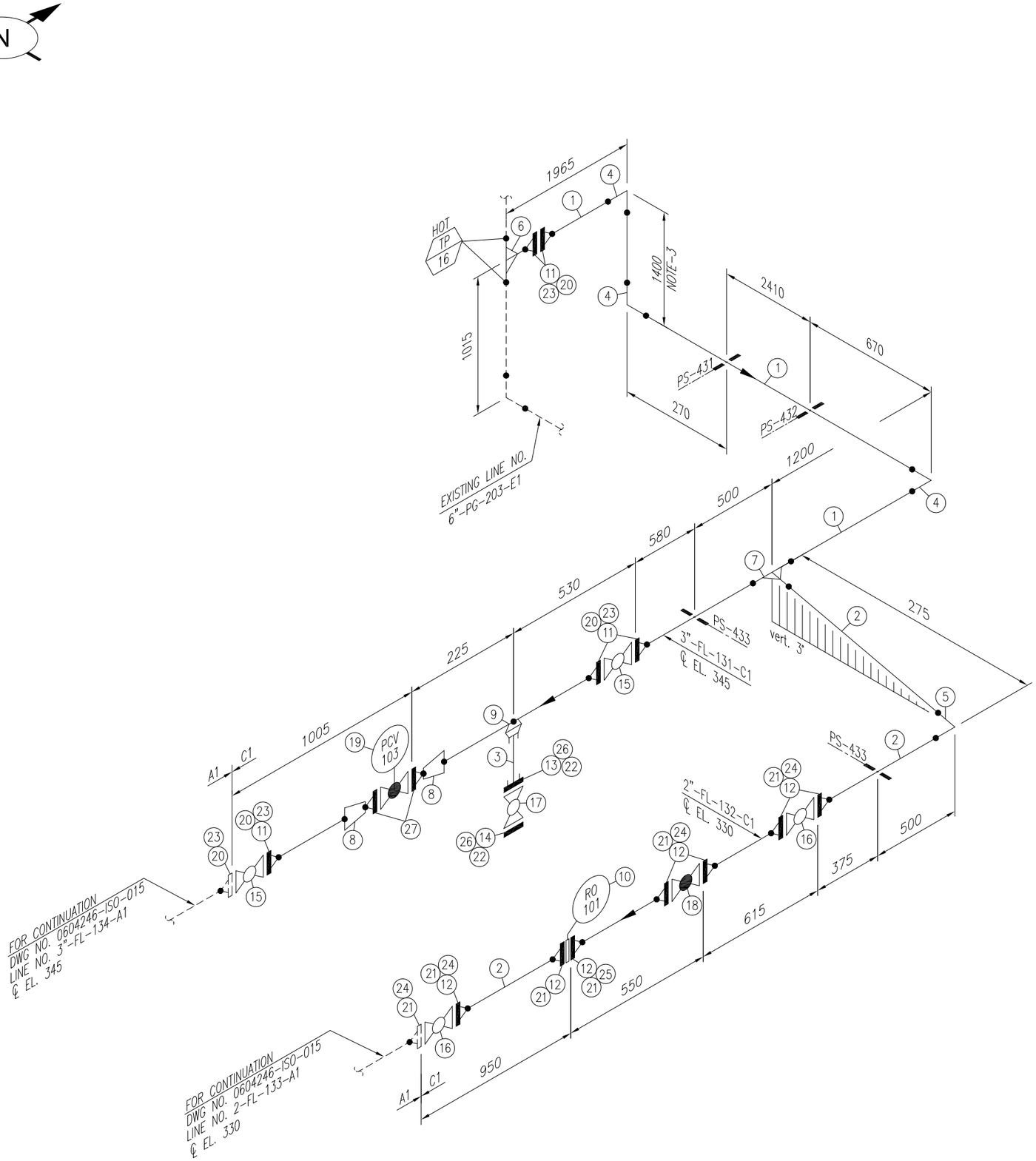

Sr. NO.	SIZE	DESCRIPTION	QTY.	MATERIAL	(MAT. SPEC)	REMARKS
1	3"	PIPE SCH.80 BE SMLS	8.1M	ASTM A-106 GR.B	C1	
2	2"	PIPE SCH.160 PE SMLS	1.4M	ASTM A-106 GR.B	C1	
3	3/4"	PIPE SCH.160 PE SMLS	0.1M	ASTM A-106 GR.B	C1	
4	3"	ELBOW 90° LR SCH.80 BW	3	ASTM A-234 Gr. WPB	C1	
5	2"	ELBOW 90° LR SCH.160 BW	1	ASTM A-234 Gr. WPB	C1	
6	6"x3"	RED. TEE SCH.80 BW	1	ASTM A-234 Gr. WPB	-	
7	3"x2"	RED. TEE SCH.80x160 BW	1	ASTM A-234 Gr. WPB	C1	
8	3"xX"	CONC REDUCER SCH.80x160 BW	2	ASTM A-234 Gr. WPB	C1	
9	3"x3/4"	SOCKOLET 3000# SW	1	ASTM A-105	C1	
10	2"	ORIFICE PLATE 600#	1	-	-	
11	3"	W.N. FLANGE RTJ. SCH.80 BW 600#.	5	ASTM A-105	C1	
12	2"	W.N. FLANGE RTJ. SCH.160 BW 600#.	7	ASTM A-105	C1	
13	3/4"	S.W. FLANGE RTJ. 600#.	1	ASTM A-105	C1	
14	3/4"	BLIND. FLANGE RTJ. 600#.	1	ASTM A-105	C1	
15	3"	BALL VALVE RTJ. 600#.	2	SEE TAG NO. VB-105	C1	
16	2"	BALL VALVE RTJ. 600#.	2	SEE TAG NO. VB-105	C1	
17	3/4"	BALL VALVE RTJ. 600#.	1	SEE TAG NO. VB-104	C1	
18	2"	GLOBE VALVE RTJ. 600#.	1	SEE TAG NO. VGL-103	C1	
19	X"	PCV RTJ. 600#.	1	SEE DATA SHEET	-	
20	3"	OCTAGONAL RING, 600# R-31	5	316L S.S.	C1	
21	2"	OCTAGONAL RING, 600# R-23	10	316L S.S.	C1	
22	3/4"	OCTAGONAL RING, 600# R-13	2	316L S.S.	C1	
23	3/4"	LG STUD BOLTS C/W 2 NUTS 125mm LONG	40	ASTM A 193 Gr. B7 CADMIUM PLATED ASTM A 194 Gr. 2H CADMIUM PLATED	C1	
24	5/8"	LG STUD BOLTS C/W 2 NUTS 110mm LONG	48	ASTM A 193 Gr. B7 CADMIUM PLATED ASTM A 194 Gr. 2H CADMIUM PLATED	C1	
25	5/8"	LG STUD BOLTS C/W 2 NUTS 120mm LONG	8	ASTM A 193 Gr. B7 CADMIUM PLATED ASTM A 194 Gr. 2H CADMIUM PLATED	C1	
26	5/8"	LG STUD BOLTS C/W 2 NUTS 90mm LONG	8	ASTM A 193 Gr. B7 CADMIUM PLATED ASTM A 194 Gr. 2H CADMIUM PLATED	C1	
27	X"	W.N. FLANGE RTJ. SCH.160 BW 600#.	2	ASTM A-105	C1	

NOTES:

1. ALL DIMENSIONS ARE IN MM UNLESS OTHERWISE STATED.
2. ALL DIMENSIONS, ELEVATIONS AND ORIENTATIONS TO BE VERIFIED BY THE CONTRACTOR BEFORE UNDERTAKING ANY KIND OF FABRICATION,CONSTRUCTION AND INSTALLATION WORK AT SITE.
3. ELEVATION TO BE ADJUST AS PER SITE REQUIREMENT.

REV.	DATE	DESCRIPTION	DRAWN	CHK'D	APP'VD	APP'VD
0	17/03/20	ISSUED FOR REVIEW	NU	SHAH		
			CONSULTANT			CLIENT

PETROCHEMICAL ENGINEERING CONSULTANTS
C-2, BLOCK NO. 17, GULSHAN-E-IQBAL, NEAR NATIONAL STADIUM, KARACHI-75300. PAKISTAN.
TEL. +92 (21) 34827780, 34961088, FAX: +92 21 34961089, E-Mail: contact@pcec.com.pk web site: www.pcec.com.pk

CLIENT: OIL & GAS DEVELOPMENT COMPANY LTD.

PROJECT : DESIGN OF PANDHI TIE-IN AT SINJHORO PLANT

TITLE : PIPING ISOMETRIC
SINJHORO PLANT
LINE No. 3"-FL-131-C1 / 2"-FL-132-C1

DRAWING NO.	SHEET		SCALE	REV.
	NO.	OF	N.T.S.	
0604246-ISO-014	1	1	A3	0

Sr. NO.	SIZE	DESCRIPTION	QTY.	MATERIAL	(MAT. SPEC)	REMARKS
1	3"	PIPE SCH.80 BE SMLS	10.8M	ASTM A-106 GR.B	A1	
2	2"	PIPE SCH.80 BE SMLS	0.6M	ASTM A-106 GR.B	A1	
3	3/4"	PIPE SCH.80 PE SMLS	0.1M	ASTM A-106 GR.B	A1	
4	3"	ELBOW 90° LR SCH.40 BW	3	ASTM A-234 Gr. WPB	A1	
5	2"	ELBOW 90° LR SCH.80 BW	1	ASTM A-234 Gr. WPB	A1	
6	3"x2"	RED. TEE SCH.80 BW	1	ASTM A-234 Gr. WPB	A1	
7	3"	W.N. FLANGE RTJ. SCH.80 BW 600#.	1	ASTM A-105	C1	
8	2"	W.N. FLANGE RTJ. SCH.80 BW 600#.	1	ASTM A-105	–	
9	3/4"	S.W. FLANGE RF. 150#.	1	ASTM A-105	A1	
10	3/4"	BLIND FLANGE RF. 150#.	1	ASTM A-105	A1	
11	3/4"	BALL VALVE 150#	1	SEE TAG NO. VB-100	A1	
12	3/4"	GASKET 150# 3mm THICK COMPRESSED GRAPHITE FILLED , SPIRAL WOUND 304 SS CENTRAL RING AS PER ASME B-16.20	2	304 S.S.	A1	
13	1/2"	LG STUD BOLTS C/W 2 NUTS 65mm LONG	8	ASTM A 193 Gr. B7M CADMIUM PLATED ASTM A 194 Gr. 2HM CADMIUM PLATED	A1	

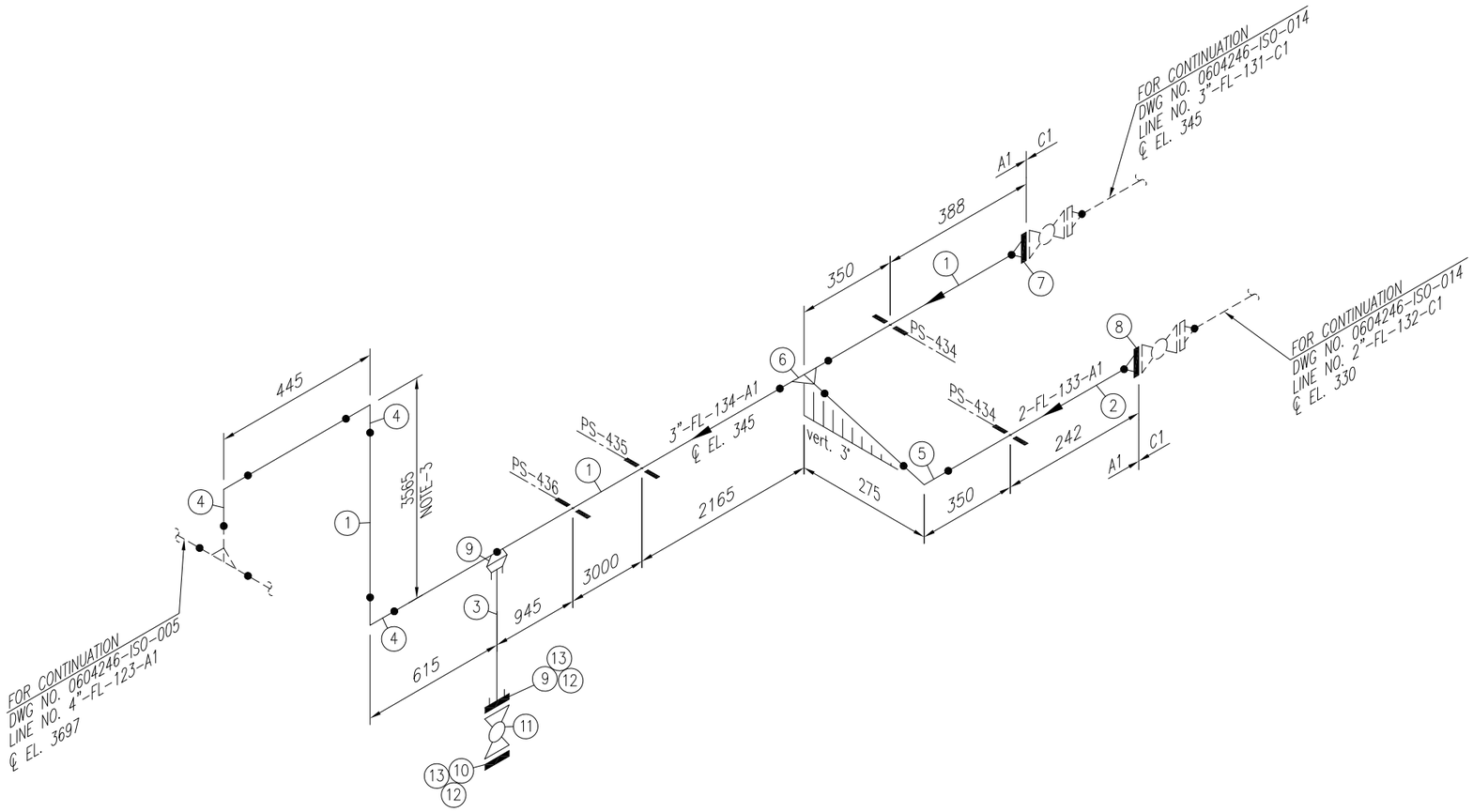

NOTES:

1. ALL DIMENSIONS ARE IN MM UNLESS OTHERWISE STATED.
2. ALL DIMENSIONS, ELEVATIONS AND ORIENTATIONS TO BE VERIFIED BY THE CONTRACTOR BEFORE UNDERTAKING ANY KIND OF FABRICATION,CONSTRUCTION AND INSTALLATION WORK AT SITE.
3. ELEVATION TO BE ADJUST AS PER SITE REQUIREMENT.

REV.	DATE	DESCRIPTION	DRAWN	CHK'D	APP'VD	APP'VD
0	17/03/20	ISSUED FOR REVIEW	NU	SHAH		
			CONSULTANT			CLIENT

PETROCHEMICAL ENGINEERING CONSULTANTS
C-2, BLOCK NO. 17, GULSHAN-E-IQBAL, NEAR NATIONAL STADIUM, KARACHI-75300. PAKISTAN.
TEL. +92 (21) 34827780, 34961088, FAX: +92 21 34961089, E-Mail: contact@pcec.com.pk web site: www.pcec.com.pk

CLIENT: OIL & GAS DEVELOPMENT COMPANY LTD.

PROJECT : DESIGN OF PANDHI TIE-IN AT SINJHORO PLANT

TITLE : PIPING ISOMETRIC
SINJHORO PLANT
LINE No. 3"-FL-134-A1 / 2-FL-133-A1

DRAWING NO.	SHEET		SCALE	REV.
	NO.	OF	N.T.S.	
0604246-ISO-015	1	1	A3	0

Sr. NO.	SIZE	DESCRIPTION	QTY.	MATERIAL	(MAT. SPEC)	REMARKS
1	6"	BLIND FLANGE RTJ. 900#.	2	ASTM A-105	–	
2	6"	OCTAGONAL RING, 900# R-45	2	316L S.S.	–	
3	1 1/8"	LG STUD BOLTS C/W 2 NUTS 195mm LONG	24	ASTM A 193 Gr. B7 CADMIUM PLATED ASTM A 194 Gr. 2H CADMIUM PLATED	–	

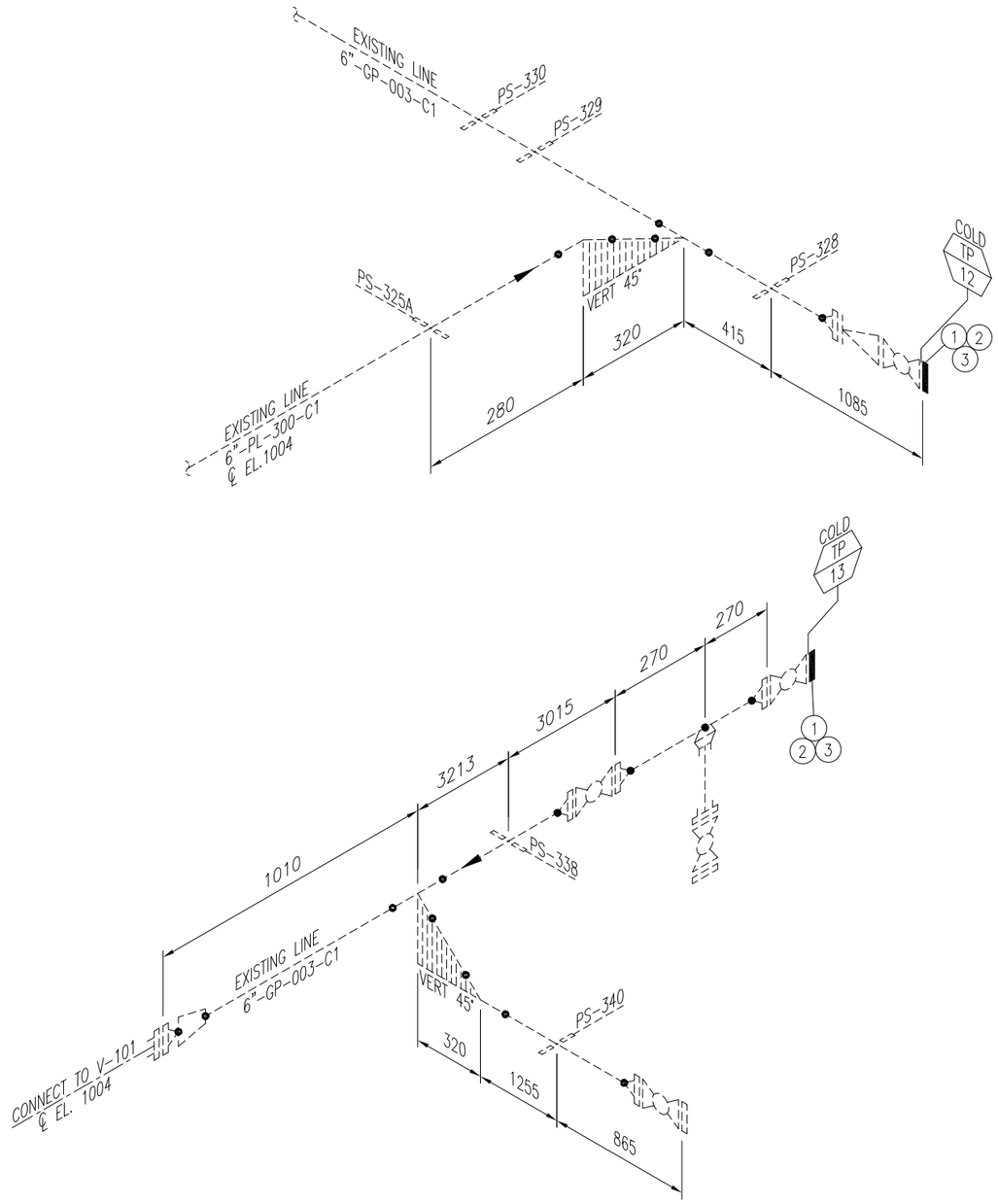

NOTES:

1. ALL DIMENSIONS ARE IN MM UNLESS OTHERWISE STATED.
2. ALL DIMENSIONS, ELEVATIONS AND ORIENTATIONS TO BE VERIFIED BY THE CONTRACTOR BEFORE UNDERTAKING ANY KIND OF FABRICATION,CONSTRUCTION AND INSTALLATION WORK AT SITE.

REV.	DATE	DESCRIPTION	DRAWN	CHK'D	APP'VD	APP'VD
0	17/03/20	ISSUED FOR REVIEW	NU	SHAH		
			CONSULTANT			CLIENT

PETROCHEMICAL ENGINEERING CONSULTANTS
C-2, BLOCK NO. 17, GULSHAN-E-IQBAL, NEAR NATIONAL STADIUM, KARACHI-75300. PAKISTAN.
TEL. +92 (21) 34827780, 34961088, FAX: +92 21 34961089, E-Mail: contact@pcec.com.pk web site: www.pcec.com.pk

CLIENT: OIL & GAS DEVELOPMENT COMPANY LTD.

PROJECT : DESIGN OF PANDHI TIE-IN AT SINJHORO PLANT

TITLE : PIPING ISOMETRIC SINJHORO PLANT LINE No. 6"-GP-003-C1

DRAWING NO.	SHEET NO.	OF	SCALE	REV.
0604246-ISO-016	1	1	N.T.S. A3	0

OIL & GAS DEVELOPMENT COMPANY LIMITED

0604246: DESIGN OF PANDHI TIE-IN AT SINJHORO PLANT

(CIVIL PACKAGE)

CONSULTANTS: **MARCH, 2020**

Petrochemical Engineering Consultants
C-2, Block No. 17, Gulshan-E-Iqbal, Karachi-75300, Pakistan.
Telephones: +92 (21) 34827780, 34961088, Fax: +92 (21) 34961089
E-Mail: contact@pcec.com.pk web: www.pcec.com.pk

Disclaimer

This report has been prepared on behalf of OIL & GAS DEVELOPMENT COMPANY LIMITED "OGDCL" and for the exclusive use of OGDCL and is subject to and issued in accordance with the agreement between Petrochemical Engineering Consultants "PEC" & OGDCL. PEC accept no liability or responsibility whatsoever for it in respect of any use of or reliance upon this report by any third party.

Copying this report without the permission of Petrochemical Engineering Consultants is not permitted.

REV	DESCRIPTION	ORIG	REVIEW	PEC APPROVAL	DATE	CLIENT APPROVAL	DATE
0	ISSUED FOR REVIEW	AISHA	SH.ADEEL	ADEEL	MAR 13, 2020		

MARCH, 2020

BILL OF QUANTITIES

OIL AND GAS DEVELOPMENT COMPANY LTD.

DESIGN OF PANDHI TIE-IN AT SINJHORO PLANT

BILL OF QUANTITIES

FOR CIVIL WORKS

DOC. No. : 0604246-CIV-BOQ-001
PREP. BY : AS
REV. : 0
DATE : 18-03-2020

Item. No.	Description	Qty.	Unit	Rate	Amount in Rs.
1.0	**EXCAVATION**				
	Excavation for foundation in all kinds of soil, dry or wet, hard or soft, including all operation, complete with breaking clods, levelling, dressing, dewatering, shoring & compacting. Include backfilling of suitable excavated earth also with clean sand where required i/c breaking clods, dressing, watering and consolidating by ramming in layers not exceeding 8" depth to obtain compaction as per instruction and specification of the Consultant and approval of Client (Site Engineer).Contractor will carryout compaction test as per specification with out any extra cost.				
1.1	For Pipe Structure Support	20.00	m^3		
1.2	For Sleeper	3.00	m^3		
1.3	For Three Phase Seprator	44.20	m^3		
1.4	For Heater	20.30	m^3		
2.0	**NON-SHRINKAGE GROUT**				
	Supply & laying of 25 mm thk. non-shrinkage grout, having minimum compressive strength of 40 N/mm2 in accordance with the Company specification, standard drawings and etc.				
2.1	For Pipe Structure Support	1.75	m^2		
2.2	For Three Phase Seprator	9.30	m^2		
2.3	For Heater	16.50	m^2		
3.0	**PLAIN CEMENT CONCRETE**				
	Providing and laying Plain cement concrete of specified strength using approved quality 3/4" max. size graded crushed aggregate & fine aggregate including approved Steel formwork & its removal, all operations of vibrating, levelling, compacting and curing etc. complete as per specification & instruction of the Consultant. **Note:** 1. S.R cement should be used for all works. 2. Mix design for each type of sample will be provided by the Contractor				
3.1	CC 1:4:8 (1 cement 4 sand and 8 coarse aggregate).				
3.1.1	For Pipe Structure Support	1.00	m^3		
3.1.2	For Sleeper	0.50	m^3		
3.1.3	For Three Phase Seprator	4.10	m^3		
3.1.4	For Heater	1.80	m^3		
4.0	**REINFORCED CEMENT CONCRETE**				
	Providing and laying Reinforced cement concrete shall be developed 28 days cylindrical strength of 3000psi specified, using approved quality 3/4" max. size graded crushed aggregate & fine aggregate including approved form work & its removal, all operations of vibrating, levelling, compacting and curing etc complete but excluding the cost of steel as per specification & instruction of the Consultant. **Note**: 1. Sulphate resistant cement should be used for all works. 2. Mix design for each type of sample will be provided by the Contractor				

OIL AND GAS DEVELOPMENT COMPANY LTD.

DESIGN OF PANDHI TIE-IN AT SINJHORO PLANT

BILL OF QUANTITIES

FOR CIVIL WORKS

Petrochemical Engineering Consultants

DOC. No. : 0604246-CIV-BOQ-001
PREP. BY : AS
REV. : 0
DATE : 18-03-2020

Item. No.	Description	Qty.	Unit	Rate	Amount in Rs.
	RCC 1:2:4 (1 cement 2 sand and 4 coarse aggregate).				
4.1	For Pipe Structure Support	6.00	m^3		
4.2	For Sleeper	275.00	m^3		
4.3	For Three Phase Seprator	15.20	m^3		
4.4	For Heater	6.60	m^3		
5.0	**STEEL REINFORCEMENT**				
	Providing and laying hot rolled grade 460 steel reinforcement bars complying with BS-4449) including the cost of straightening, cutting, bending, binding, wastage and such overlaps as are not shown in drawings, placing in position on cement concrete 1:2:4 precast spacer block or M.S chairs, tying with binding wire (GI wire of 18 guage), including cost of chairs and wires etc. in all kinds of RCC works.				
	60 Ksi Deformed Steel Rebars				
5.1	For Pipe Structure Support	1.05	tons		
5.2	For Sleeper	0.66	tons		
5.3	For Three Phase Seprator	0.83	tons		
5.4	For Heater	0.38	tons		
6.0	**ROAD BASE LAYER**				
	Provide two layers of road base material each havig thickness of 250 mm directly under the foundation and should be compacted in layers upto 95% dry density. Contractor will carryout compaction test as per specification.				
6.1	For Three Phase Seprator	53.60	m²/each layer		
6.2	For Heater	26.20	m²/each layer		
7.0	**STEEL EMBEDDED PARTS**				
	Providing, fabricating and fixing of steel embedded parts in concrete such as M.S plates/ Lugs/ grating/Split-end tangs/ Lifting Hooks/ Holding down/Anchor bolts/ H.D. bolts type C and Nuts etc. Complete as per drawings, specifications and approval of Client.				
	Anchor Bolts/Lugs/MS Plates				
7.1	For Pipe Structure Support	210.0	Kg		
7.2	For Sleeper	300.0	Kg		
8.0	**STEEL STRUCTURE**				
	Supply of material, fabrication, painting, erection, surface preparation of steel structure for Platforms and Crossovers etc. Complete as per drawings, specifications and approval of Client.				
8.1	Steel Structure for Pipe Supports				
8.1.1	UC 152X152X23	495.0	Kg		
8.1.2	L 80x80x10	70.0	Kg		

NOTE:

1 Quantities are actual without any margin

DRAWING LIST

OIL & GAS DEVELOPMENT COMPANY LIMITED
DESIGN OF PANDHI TIE-IN AT SINJHORO PLANT
DRAWING LIST

DOC. NO. : 0604246-CIV-LT-001
PREP. : AS
REV. : 0
DATE. : 18-MAR-2020

S.NO	DESCRIPTION	DRAWING NO.	REVISION	REMARKS
1.0	CIVIL KEY PLAN	0604246-CIV-KP-001	0	ISSUED FOR REVIEW
1.1	FOUNDATION LOCATION PLAN-1	0604246-CIV-LO-001	0	ISSUED FOR REVIEW
1.2	FOUNDATION LOCATION PLAN-2	0604246-CIV-LO-002	0	ISSUED FOR REVIEW
1.3	FOUNDATION PLAN & SECTION FOR THREE PHASE SEPARATOR (V-107)	0604246-CIV-DT-001	0	ISSUED FOR REVIEW
1.4	FOUNDATION PLAN , SECTION AND DETAILS FOR PIPE SLEEPER	0604246-CIV-DT-002	0	ISSUED FOR REVIEW
1.5	FOUNDATION PLAN , SECTION AND DETAILS FOR PIPE STRUCTURE SUPPORT	0604246-CIV-DT-003	0	ISSUED FOR REVIEW
1.6	SHOE DETAIL	0604246-CIV-DT-004	0	ISSUED FOR REVIEW
1.7	FOUNDATION PLAN & SECTION FOR HEATER	0604246-CIV-DT-005	0	ISSUED FOR REVIEW

DRAWINGS

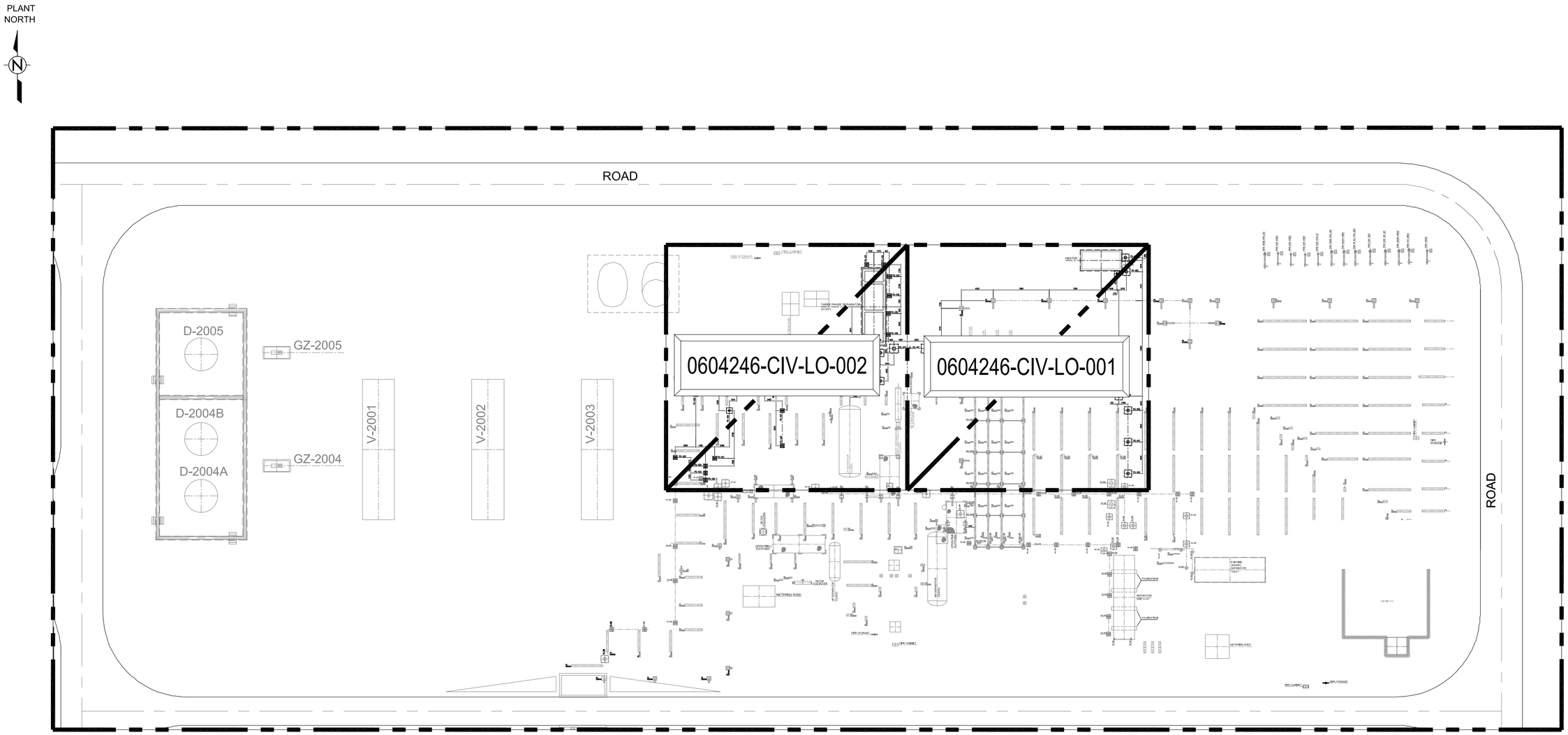

REV.	DATE	DESCRIPTION OF REVISION	PREP'D:	CHECK	APPR.
0	18/03/2020	ISSUED FOR REVIEW	AHK	SAR	

PETROCHEMICAL ENGINEERING CONSULTANTS
C-2, BLOCK NO. 17, GULSHAN-E-IQBAL, NEAR NATIONAL STADIUM, KARACHI-75300. PAKISTAN.
TEL +92 (21) 34827780, 34961088, FAX: +92 21 34961089, E-Mail: contact@pcec.com.pk web site: www.pcec.com.pk

CLIENT : OIL & GAS DEVELOPMENT COMPANY LIMITED

PROJECT : DESIGN OF PANDHI TIE-IN AT SINJHORO PLANT

TITLE : SINJHORO PLANT CIVIL KEY PLAN

JOB NO	DRAWING NO	SHEET NO	SCALE	SHEET SIZE	REV
0604246	0604246-CIV-KP-001	1 OF 1	1:300	A1	0

THIS DRAWING AND DESIGN IS THE PROPERTY OF PETROCHEMICAL AND MUST NOT BE COPIED OR PASSED TO ANY THIRD PARTY WITHOUT WRITTEN CONSENT FROM THE PETROCHEMICAL ENGINEERING CONSULTANTS

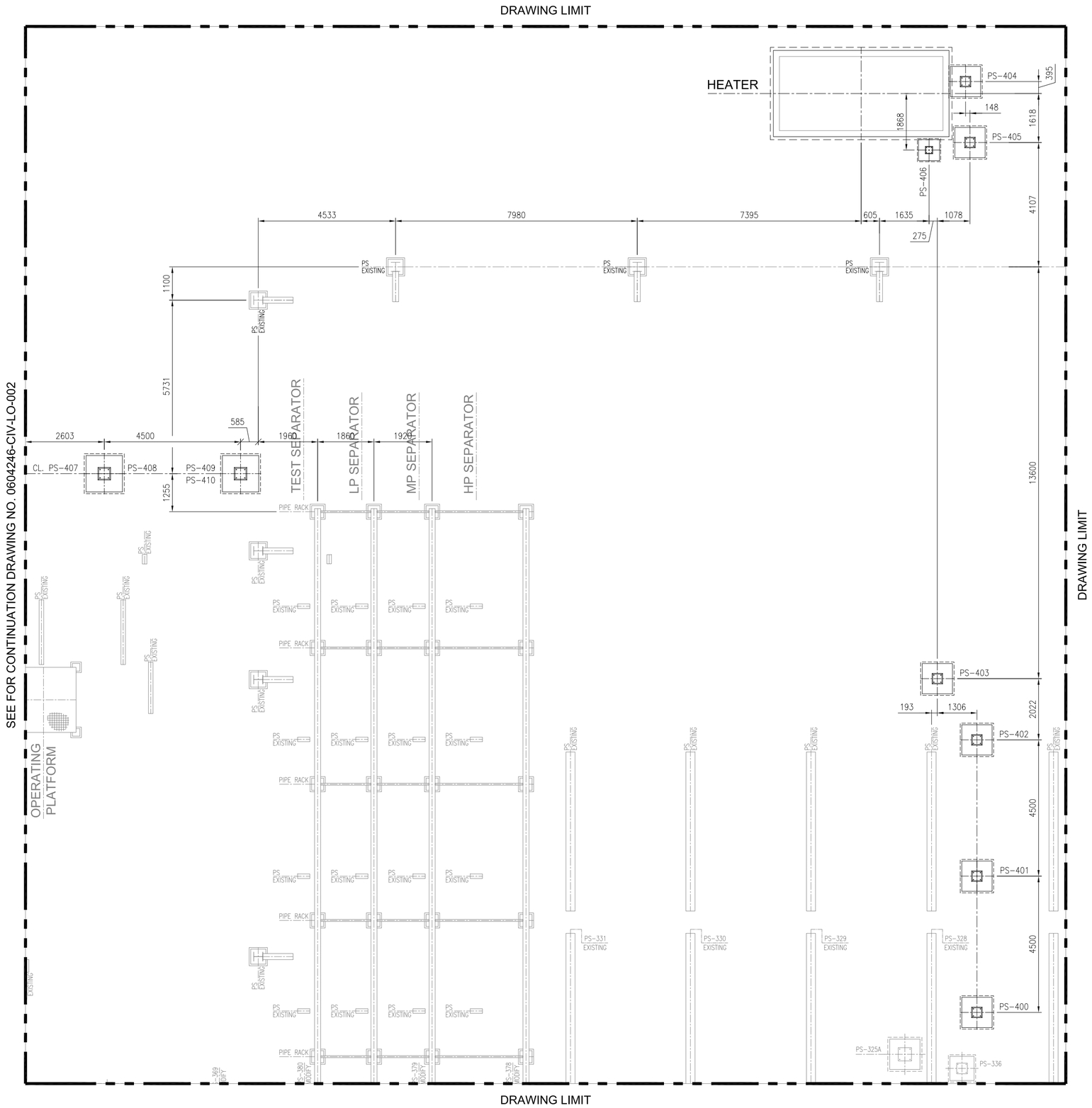

NOTES:

1. ALL DIMENSION ARE IN mm UNLESS STATED OTHERWISE.

REV.	DATE	DESCRIPTION OF REVISION	PREP'D:	CHECK	APPR.
0	14/03/2020	ISSUED FOR REVIEW	AHK	SAR	

PETROCHEMICAL ENGINEERING CONSULTANTS
C-2, BLOCK NO. 17, GULSHAN-E-IQBAL, NEAR NATIONAL STADIUM, KARACHI-75300. PAKISTAN.
TEL: +92 (21) 34827780, 34961088, FAX: +92 21 34961089, E-Mail: contact@pcec.com.pk web site: www.pcec.com.pk

CLIENT : OIL & GAS DEVELOPMENT COMPANY LIMITED

PROJECT : DESIGN OF PANDHI TIE-IN AT SINJHORO PLANT

TITLE : SINJHORO PLANT FOUNDATION LOCATION PLAN-1

JOB NO	DRAWING NO	SHEET NO	SCALE	SHEET SIZE	REV
0604246	0604246-CIV-LO-001	1 OF 1	1:100	A2	0

THIS DRAWING AND DESIGN IS THE PROPERTY OF PETROCHEMICAL AND MUST NOT BE COPIED OR PASSED TO ANY THIRD PARTY WITHOUT WRITTEN CONSENT FROM THE PETROCHEMICAL ENGINEERING CONSULTANTS

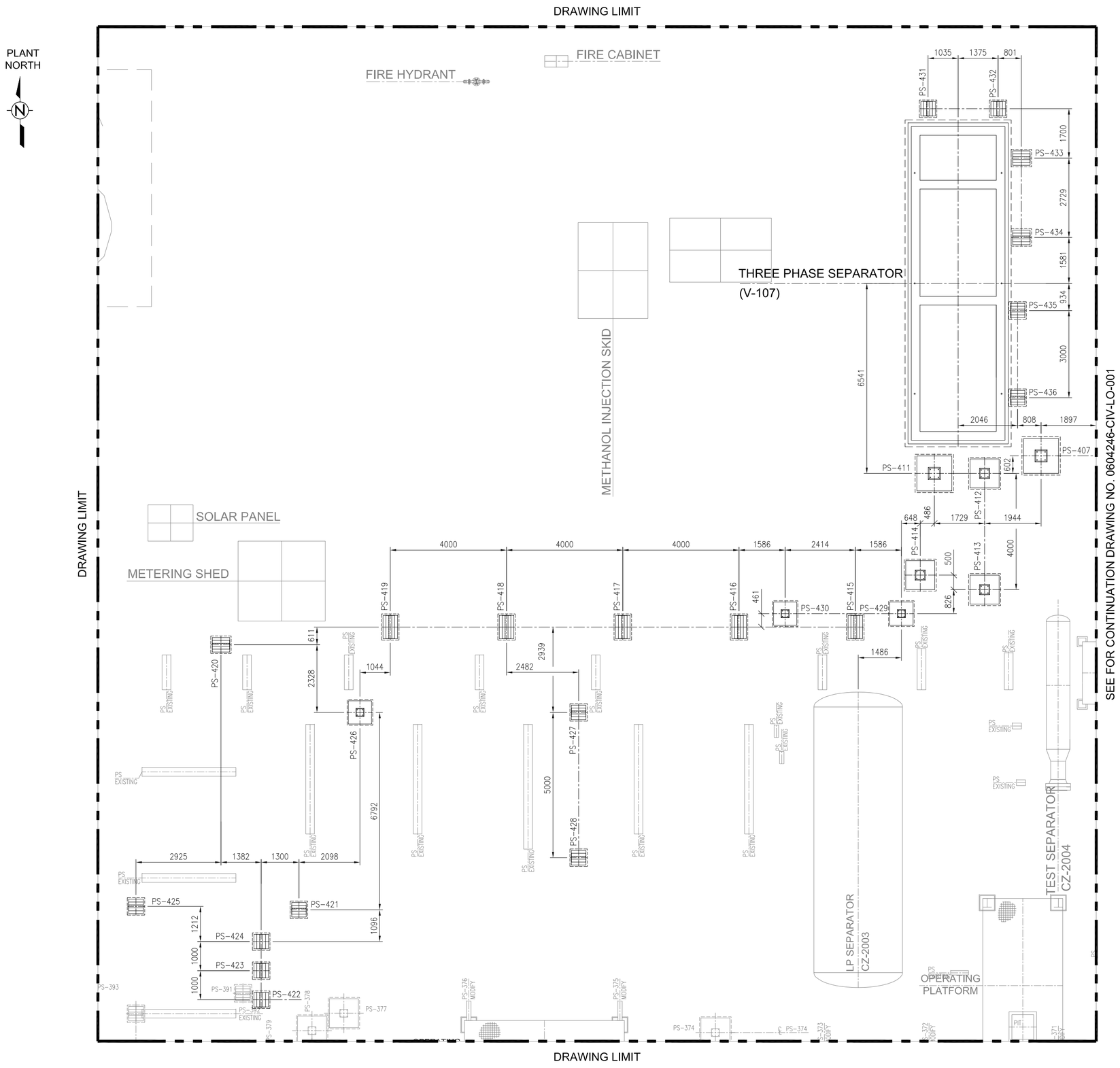

NOTES:

1. ALL DIMENSION ARE IN mm UNLESS STATED OTHERWISE.

REV.	DATE	DESCRIPTION OF REVISION	PREP'D:	CHECK	APPR.
0	14/03/2020	ISSUED FOR REVIEW	AHK	SAR	

PETROCHEMICAL ENGINEERING CONSULTANTS
C-2, BLOCK NO. 17, GULSHAN-E-IQBAL, NEAR NATIONAL STADIUM, KARACHI-75300. PAKISTAN.
TEL. +92 (21) 34827780, 34961088, FAX: +92 21 34961089, E-Mail: contact@pcec.com.pk web site: www.pcec.com.pk

CLIENT : OIL & GAS DEVELOPMENT COMPANY LIMITED

PROJECT : DESIGN OF PANDHI TIE-IN AT SINJHORO PLANT

TITLE : SINJHORO PLANT FOUNDATION LOCATION PLAN-2

JOB NO	DRAWING NO	SHEET NO	SCALE	SHEET SIZE	REV
0604246	0604246-CIV-LO-002	1 OF 1	1:100	A2	0

THIS DRAWING AND DESIGN IS THE PROPERTY OF PETROCHEMICAL AND MUST NOT BE COPIED OR PASSED TO ANY THIRD PARTY WITHOUT WRITTEN CONSENT FROM THE PETROCHEMICAL ENGINEERING CONSULTANTS

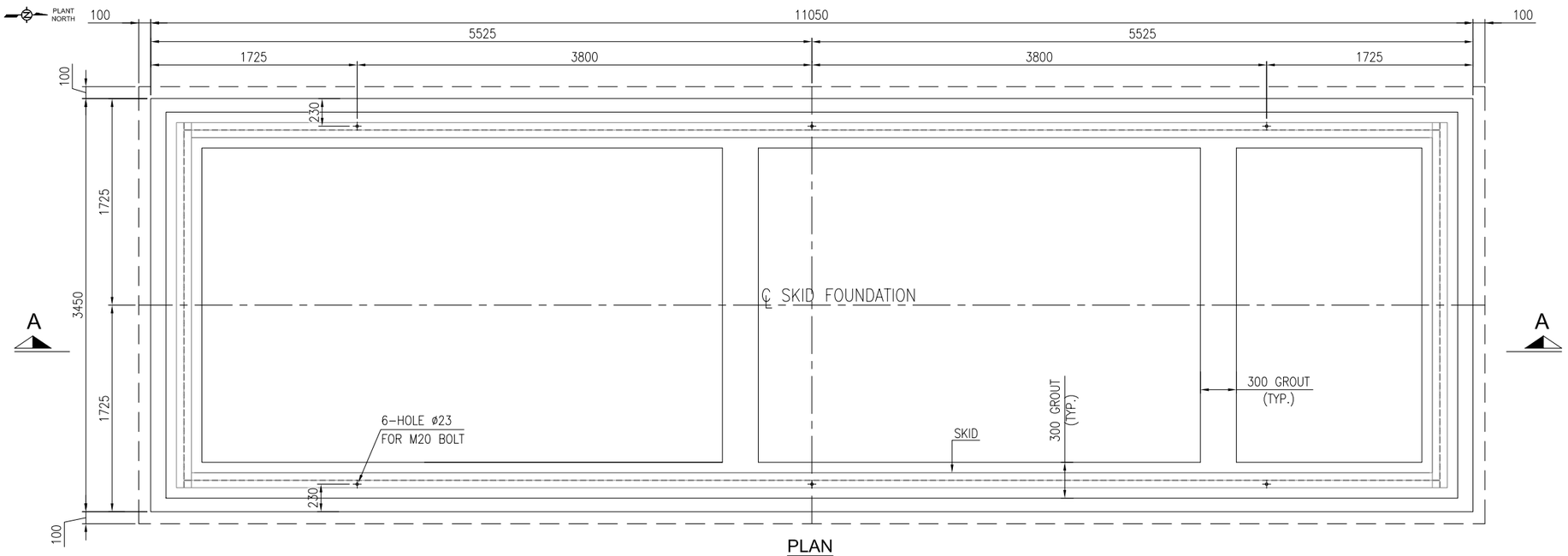

PLAN
(SCALE 1:30)

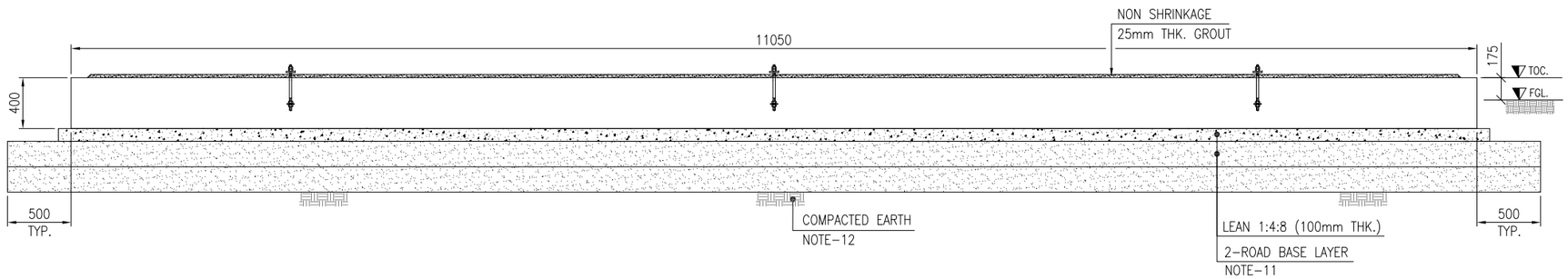

SECTION A-A
(SCALE 1:30)

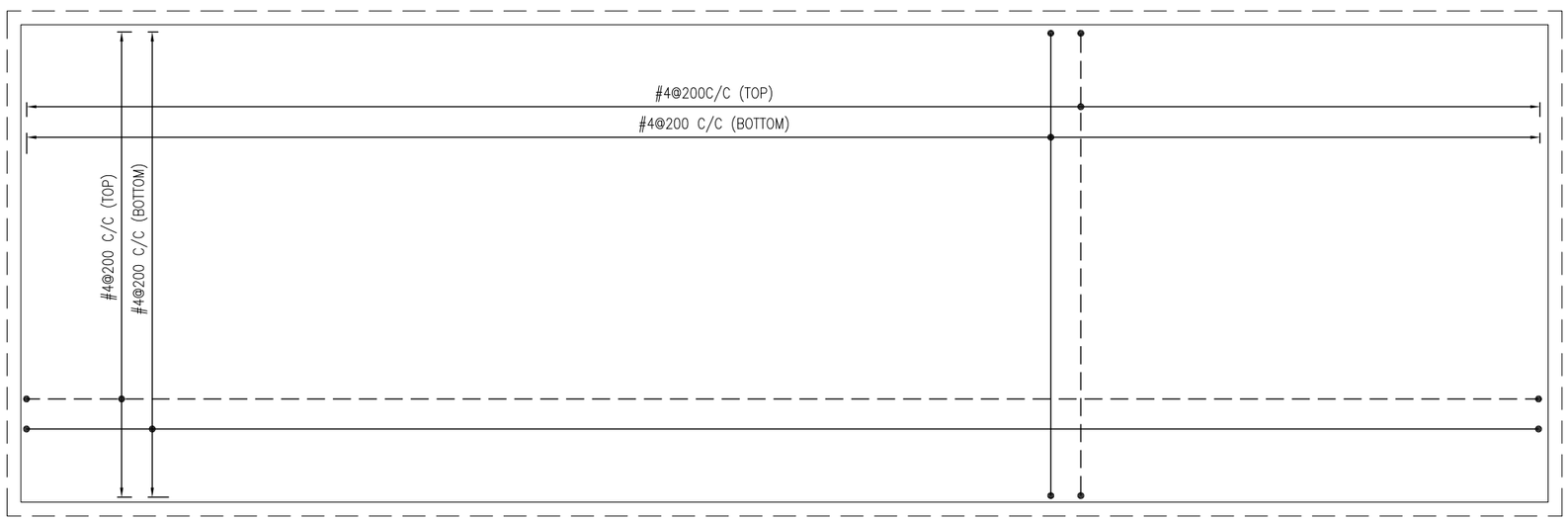

REINFORCEMENT PLAN
(SCALE 1:30)

NOTES:

1. ALL DIMENSIONS ARE IN MM UNLESS OTHERWISE NOTED.
2. CONTRACTOR WILL VERIFY ALL THE DIMENSIONS BEFORE EXECUTION OF WORK.
3. SULPHATE RESISTANT CEMENT SHOULD BE USED AND, REINFORCED CONCRETE SHOULD HAVE A 28 DAY CYLINDRICAL STRENGTH OF 3000 PSI.
4. BLINDING CONCRETE SHOULD BE AT LEAST 1:4:8 HAVING CYL. STRENGTH OF 1000 PSI.
5. CONCRETE SHOULD BE MECHANICALLY VIBRATED DURING POURING.
6. ALL STEEL SHOWN IN THIS DRAWING IS DEFORMED STEEL HAVING YIELD STRENGTH OF 60 KSI.
7. USE STEEL FORMWORK FOR ALL CONCRETE WORKS.
8. STAGGERED LAP SHOULD BE PROVIDED. LAP LENGTH SHOULD BE AS FOLLOWS:
   a) FOR #4 BAR : 610 mm
9. CONCRETE EXPOSED TO EARTH SURFACE SHOULD BE BITUMEN COATED.
10. PROVIDE 75MM CLEAR COVER TO REINFORCEMENT BARS.
11. PROVIDE TWO LAYERS OF ROAD BASE MATERIAL OF 250mm THICKNESS EACH, DIRECTLY UNDER THE FOUNDATION COMPACTED TO ACHEIVE 95% MODIFIED PROCTER.
12. EXCAVATED SURFACE SHOULD BE COMPACTED TO ACHEIVE A MINIMUM OF 98% PROCTOR MAXIMUM DRY DENSITY.

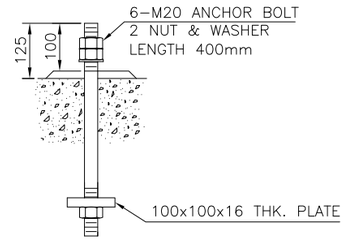

TYP. BOLT DETAIL

LEGEND:

FGL. = FINISH GROUND LEVEL
TOC. = TOP OF CONCRETE
TOG. = TOP OF GROUT

REV.	DATE	DESCRIPTION OF REVISION	PREP'D:	CHECK	APPR.
0	18-03-2020	ISSUED FOR REVIEW	USA	AS	

PETROCHEMICAL ENGINEERING CONSULTANTS
C-2, BLOCK NO. 17, GULSHAN-E-IQBAL, NEAR NATIONAL STADIUM, KARACHI-75300. PAKISTAN.
TEL. +92 (21) 34827780, 34961088, FAX: +92 21 34961089, E-Mail: contact@pcec.com.pk web site: www.pcec.com.pk

CLIENT : OIL & GAS DEVELOPMENT COMPANY LTD.

PROJECT : DESIGN OF PANDHI TIE-IN AT SINJHORO PLANT

TITLE : FOUNDATION PLAN & SECTION FOR THREE PHASE SEPARATOR (V-107)

JOB NO	DRAWING NO	SHEET NO	SCALE	SHEET SIZE	REV
0604246	0604246-CIV-DT-001	1 OF 1	AS SHOWN	A3	0

THIS DRAWING AND DESIGN IS THE PROPERTY OF PETROCHEMICAL AND MUST NOT BE COPIED OR PASSED TO ANY THIRD PARTY WITHOUT WRITTEN CONSENT FROM THE PETROCHEMICAL ENGINEERING CONSULTANTS

PIPE SUPPORT FOUNDATION										REINFORCEMENT			
S:NO	PS:NO	T.O.P	A	B	C	D	E	F	G	TOP (B/W)	BOTTOM (B/W)	VERTICAL	RINGS
1	PS-415 TO PS-419	300	800	500	300	250	350	300	200	#4 @ 230 c/c	#4 @ 200 c/c	#5 @ 150 c/c	#3 @ 150 c/c
2	PS-420	300	600	500	300	250	350	300	200	#4 @ 230 c/c	#4 @ 200 c/c	#5 @ 150 c/c	#3 @ 150 c/c
3	PS-421 TO PS-425	300	500	500	300	250	350	300	200	#4 @ 230 c/c	#4 @ 200 c/c	#5 @ 150 c/c	#3 @ 150 c/c
4	PS-427 & PS-428	160	500	500	300	250	350	160	200	#4 @ 230 c/c	#4 @ 200 c/c	#5 @ 150 c/c	#3 @ 150 c/c
5	PS-431 & PS-432	300	500	500	300	250	350	300	200	#4 @ 230 c/c	#4 @ 200 c/c	#5 @ 150 c/c	#3 @ 150 c/c
6	PS-433 & PS-434	300	600	500	300	250	350	300	200	#4 @ 230 c/c	#4 @ 200 c/c	#5 @ 150 c/c	#3 @ 150 c/c
7	PS-435 & PS-436	300	500	500	300	250	350	300	200	#4 @ 230 c/c	#4 @ 200 c/c	#5 @ 150 c/c	#3 @ 150 c/c

NOTES

1. ALL DIMENSIONS ARE IN MILLIMETERS UNLESS OTHERWISE SPECIFIED.
2. EXCAVATION BOTTOM TO BE WELL COMPACTED TO AVOID LATER SETTLEMENT.
3. PROVIDE CLEAR CONCRETE COVER AS FOLLOWS.
   I) FOOTINGS (BOTTOM) : 75mm TO THE MAIN REINF.
   II) PEDESTAL/COLUMNS (SIDE & TOP) : 40mm TO THE MAIN REINF.
4. CONCRETE WORKS:
   I). LEAN CONCRETE = CLASS E" 1000 PSI FOR BLINDING WORKS
   II). STRUCTURAL CONCRETE = CLASS 'C' 3000 PSI FOR BASE SLAB/PEDESTAL
   III). CONCRETE SHALL DEVELOP 28 DAYS WORK CYLINDER STRENGTH OF 3000 PSI.
   IV). SULPHATE RESISTANT CEMENT SHALL BE USED FOR ALL CONCRETE WORKS.
5. ALL STEEL SHOWN IN THIS DRAWING IS DEFORMED STEEL HAVING YIELD STRENGTH OF 60 KSI.
6. USE STEEL FORMWORK FOR ALL CONCRETE WORKS.
7. MATERIAL FOR EMBEDDED PLATE SHALL BE ASTM A-36
8. LOCATION & BOP LEVELS OF PIPE SUPPORTS SHALL BE VERIFY FROM PIPING PLANS PRIOR TO FABRICATION.
9. ALL DIMENSIONS AND ORIENTATIONS TO BE VERIFIED BY THE CONTRACTOR BEFORE COMMENCEMENT OF WORK AT SITE.
10. TO MAINTAIN IN THE ELEVATION OF THE PIPES RUNNING IN SLOPE, ADDITIONAL PLATES OR STRUCTURE MEMBERS (ANGLES, CHANNELS) SHOULD BE USED.

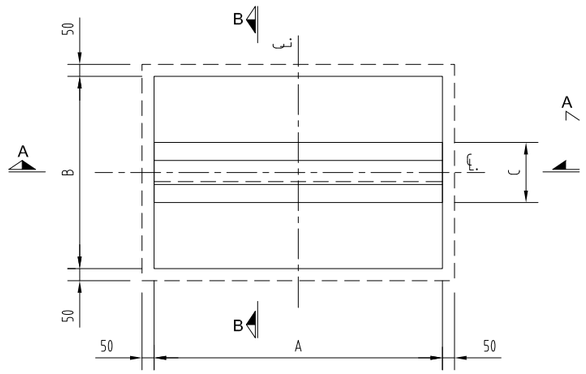

FOUNDATION PLAN
(SCALE 1:25)

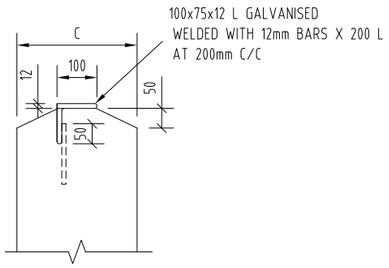

DETAIL - X
(SCALE 1:15)

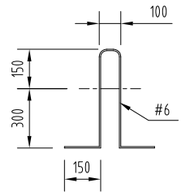

DETAIL "Y"
HOOK DETAIL
(SCALE 1:10)

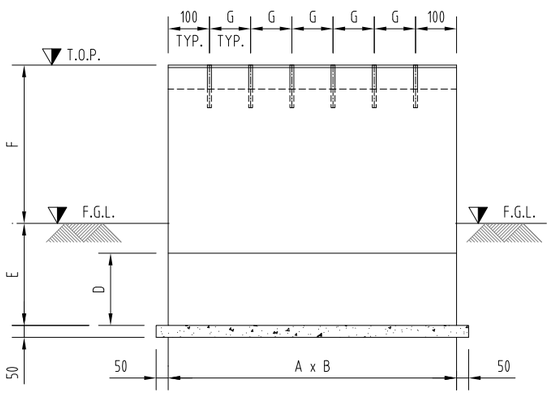

SECTION A-A
(SCALE 1:25)

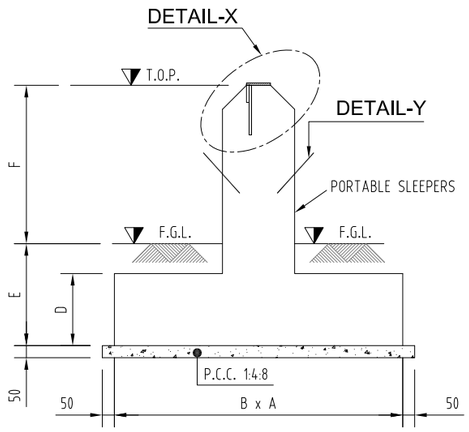

SECTION B-B
(SCALE 1:25)

ABBREVIATIONS:

FINSHED GROUD LEVEL : F.G.L
TOP OF PLATE : T.O.P

REV.	DATE	DESCRIPTION OF REVISION	PREP'D:	CHECK	APPR.
0	18-03-2020	ISSUED FOR REVIEW	USA	AS	

PETROCHEMICAL ENGINEERING CONSULTANTS
C-2, BLOCK NO. 17, GULSHAN-E-IQBAL, NEAR NATIONAL STADIUM, KARACHI-75300. PAKISTAN.
TEL. +92 (21) 34827780, 34961088, FAX: +92 21 34961089, E-Mail: contact@pcec.com.pk web site: www.pcec.com.pk

CLIENT : OIL & GAS DEVELOPMENT COMPANY LTD.

PROJECT : DESIGN OF PANDHI TIE-IN AT SINJHORO PLANT

TITLE : FOUNDATION PLAN,SECTIONS & DETAIL FOR PIPE SLEEPERS

JOB NO	DRAWING NO	SHEET NO	SCALE	SHEET SIZE	REV
0604246	0604246-CIV-DT-002	1 OF 1	AS SHOWN	A3	0

THIS DRAWING AND DESIGN IS THE PROPERTY OF PETROCHEMICAL AND MUST NOT BE COPIED OR PASSED TO ANY THIRD PARTY WITHOUT WRITTEN CONSENT FROM THE PETROCHEMICAL ENGINEERING CONSULTANTS

PIPE SUPPORT FOUNDATION												BOLT SIZE			REINFORCEMENT DETAILS				STRUCTURAL DETAIL													
S:NO	PS:NO	TYPES	A	B	C	D	E	F	G	H	I	J	K	SIZE	TOP (B/W)	BOTTOM (B/W)	VERTICAL	RINGS	A1	L	L1	L2	M	M1	M2	N	O	P	Q	THK	T.O.S	X – SECTION
1	PS-401 & PS-403	TYPE-A	1000	1000	350	350	220	220	300	1000	150	300	75	M-20	#4 @ 150 c/c	#4 @ 150 c/c	8-#4	#3 @150 c/c	–	850	–	–	400	–	–	300	300	Ø23	–	15mm	1000	UC 152x152x23
2	PS-404	TYPE-A	1000	1000	350	350	220	220	300	1000	150	300	75	M-20	#4 @ 150 c/c	#4 @ 150 c/c	8-#4	#3 @150 c/c	–	1065			400			300	300	Ø23		15mm	1215	UC 152x152x23
3	PS-405	TYPE-A	1000	1000	350	350	220	220	300	1000	150	300	75	M-20	#4 @ 150 c/c	#4 @ 150 c/c	8-#4	#3 @150 c/c	–	1065			800			300	300	Ø23		15mm	1215	UC 152x152x23
4	PS-406	TYPE-A	700	700	350	350	220	220	300	1000	150	300	75	M-20	#4 @ 150 c/c	#4 @ 150 c/c	8-#4	#3 @150 c/c	–	365	–	–	350	–	–	300	300	Ø23	–	15mm	515	UC 152x152x23
5	PS-407 & PS-408	TYPE-A	1200	1200	350	350	220	220	300	1000	150	300	75	M-20	#4 @ 150 c/c	#4 @ 150 c/c	8-#4	#3 @150 c/c	–	3570	–	–	400	–	–	300	300	Ø23	–	15mm	3720	UC 152x152x23
6	PS-409	TYPE-B	1200	1200	350	350	220	220	300	1000	150	300	75	M-20	#4 @ 150 c/c	#4 @ 150 c/c	8-#4	#3 @150 c/c	–	3570	300	–	400	500	–	300	300	Ø23	–	15mm	3720	UC 152x152x23
7	PS-411	TYPE-A	1200	1200	350	350	220	220	300	1000	150	300	75	M-20	#4 @ 150 c/c	#4 @ 150 c/c	8-#4	#3 @150 c/c	–	496	–	–	1350	–	–	300	300	Ø23	–	15mm	646	UC 152x152x23
8	PS-412 & PS-413	TYPE-C	1000	1000	300	300	170	170	300	1000	150	300	75	M-18	#4 @ 150 c/c	#4 @ 150 c/c	8-#4	#3 @150 c/c	–	410	–	–	1000	–	–	250	250	Ø20	–	12mm	560	L 80x80x10
9	PS-414	TYPE-A	1000	1000	350	350	220	220	300	1000	150	300	75	M-20	#4 @ 150 c/c	#4 @ 150 c/c	8-#4	#3 @150 c/c	–	496	–	–	400	–	–	300	300	Ø20	–	15mm	646	UC 152x152x23
10	PS-426	TYPE-C	800	800	300	300	170	170	300	1000	150	300	75	M-18	#4 @ 150 c/c	#4 @ 150 c/c	8-#4	#3 @150 c/c	–	805	–	–	300	–	–	250	250	Ø20	–	12mm	955	L 80x80x10
11	PS-429 & PS-430	TYPE-C	800	800	300	300	170	170	300	1000	150	300	75	M-18	#4 @ 150 c/c	#4 @ 150 c/c	8-#4	#3 @150 c/c	–	410	–	–	300	–	–	250	250	Ø20	–	12mm	560	L 80x80x10

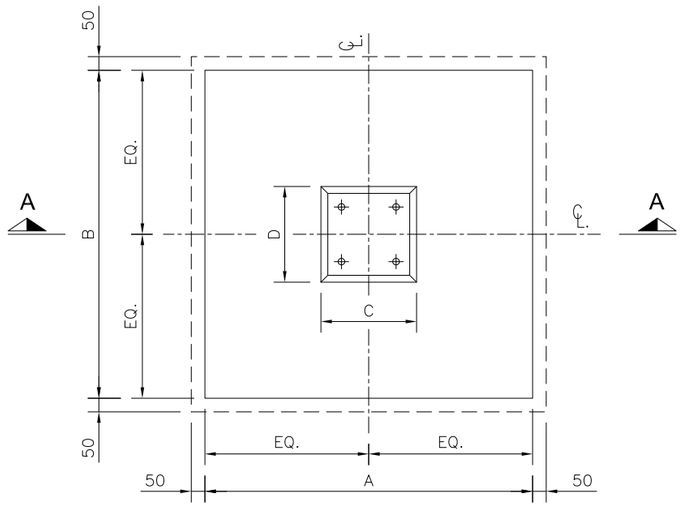

FOUNDATION PLAN
(SCALE 1:20)

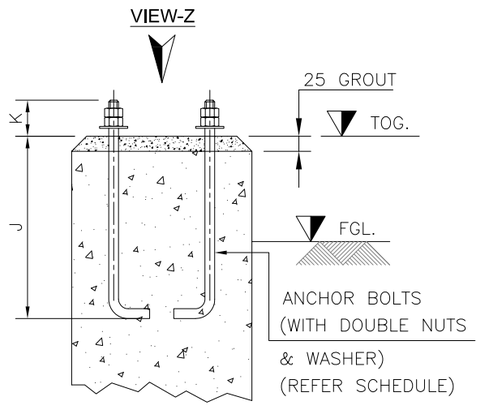

DETAIL - X
(SCALE 1:10)

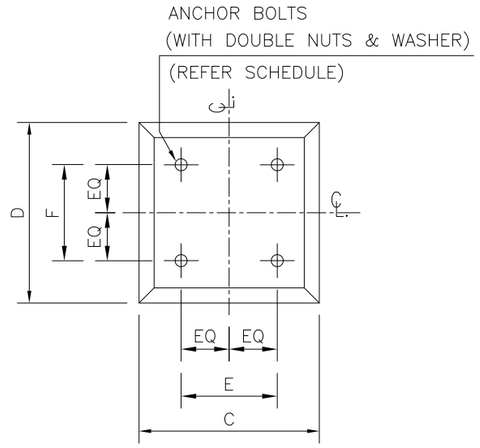

VIEW - Z
(SCALE 1:10)

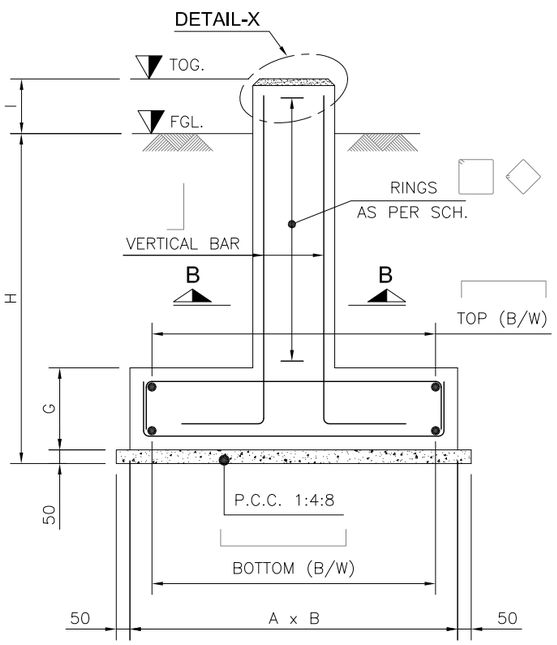

SECTION A-A
(SCALE 1:20)

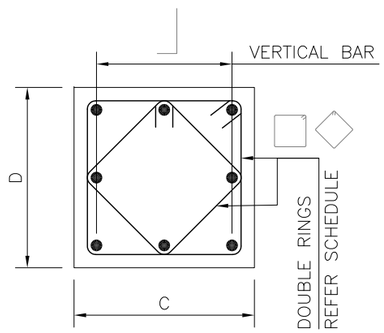

SECTION B-B
(SCALE 1:10)

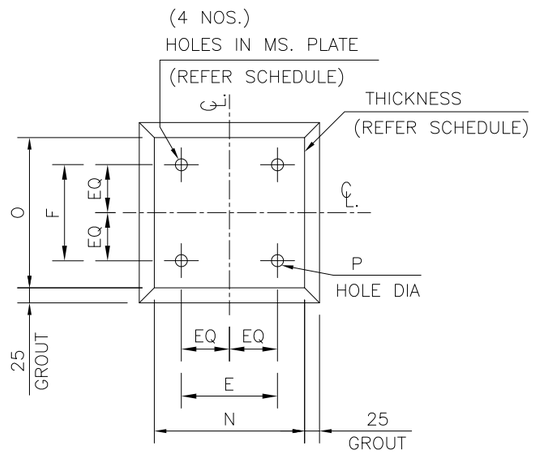

SECTION C-C
(SCALE 1:10)

NOTES:

1. ALL DIMENSIONS ARE IN MILLIMETERS UNLESS OTHERWISE SPECIFIED.
2. EXCAVATION BOTTOM TO BE WELL COMPACTED TO AVOID LATER SETTLEMENT.
3. PROVIDE CLEAR CONCRETE COVER AS FOLLOWS.
   I) FOOTINGS (BOTTOM) : 75mm TO THE MAIN REINF.
   II) PEDESTAL/COLUMNS (SIDE & TOP) : 40mm TO THE MAIN REINF.
4. CONCRETE WORKS:
   I). LEAN CONCRETE = CLASS E" 1000 PSI FOR BLINDING WORKS
   II). STRUCTURAL CONCRETE = CLASS 'C' 3000 PSI FOR BASE SLAB/PEDESTAL
   III). CONCRETE SHALL DEVELOP 28 DAYS WORK CYLINDER STRENGTH OF 3000 PSI.
   IV). SULPHATE RESISTANT CEMENT SHALL BE USED FOR ALL CONCRETE WORKS.
5. ALL STEEL SHOWN IN THIS DRAWING IS DEFORMED STEEL HAVING YIELD STRENGTH OF 60 KSI.
6. USE STEEL FORMWORK FOR ALL CONCRETE WORKS.
7. MATERIAL FOR EMBEDDED PLATE SHALL BE ASTM A-36
8. LOCATION & BOP LEVELS OF PIPE SUPPORTS SHALL BE VERIFY FROM PIPING PLANS PRIOR TO FABRICATION.
9. MATERIAL FOR ANCHOR BOLTS SHALL BE ASTM-A-307 GR.B FOR CAST IN PLACE BOLTS.
10. ALL DIMENSIONS AND ORIENTATIONS TO BE VERIFIED BY THE CONTRACTOR BEFORE COMMENCEMENT OF WORK AT SITE.
11. TO MAINTAIN IN THE ELEVATION OF THE PIPES RUNNING IN SLOPE, ADDITIONAL PLATES OR STRUCTURE MEMBERS (ANGLES, CHANNELS) SHOULD BE USED.

REV.	DATE	DESCRIPTION OF REVISION	PREP'D:	CHECK	APPR.
0	18-03-2020	ISSUED FOR REVIEW	USA	AS	

PETROCHEMICAL ENGINEERING CONSULTANTS
C-2, BLOCK NO. 17, GULSHAN-E-IQBAL, NEAR NATIONAL STADIUM, KARACHI-75300. PAKISTAN.
TEL. +92 (21) 34827780, 34961088, FAX: +92 21 34961089, E-Mail: contact@pcec.com.pk web site: www.pcec.com.pk

CLIENT : OIL & GAS DEVELOPMENT COMPANY LTD.

PROJECT : DESIGN OF PANDHI TIE-IN AT SINJHORO PLANT

TITLE : FOUNDATION PLAN,SECTIONS & DETAIL FOR PIPE STRUCTURE SUPPORTS

JOB NO	DRAWING NO	SHEET NO	SCALE	SHEET SIZE	REV
0604246	0604246-CIV-DT-003	1 OF 2	AS SHOWN	A3	0

THIS DRAWING AND DESIGN IS THE PROPERTY OF PETROCHEMICAL AND MUST NOT BE COPIED OR PASSED TO ANY THIRD PARTY WITHOUT WRITTEN CONSENT FROM THE PETROCHEMICAL ENGINEERING CONSULTANTS

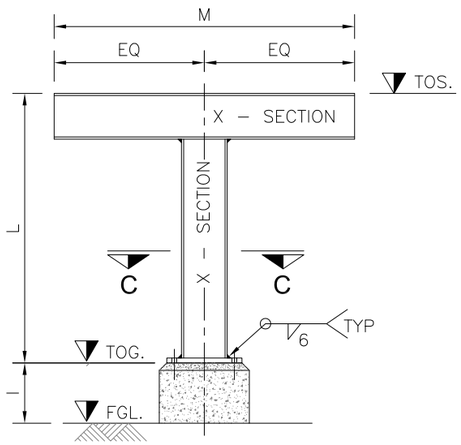

PIPE SUPPORT STRUCTURE

(SCALE 1:20) (TYPE–A)

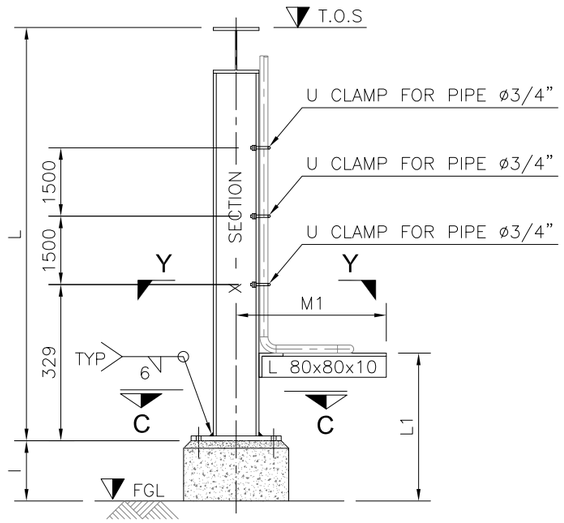

PIPE SUPPORT STRUCTURE

(SCALE 1:20) (TYPE–B)

VIEW-A

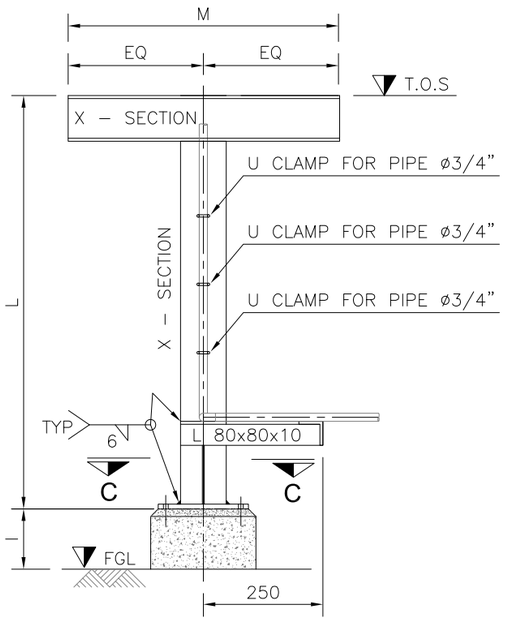

VIEW-A

(SCALE 1:20)

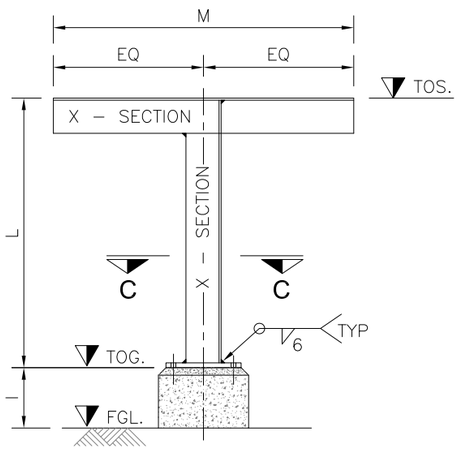

PIPE SUPPORT STRUCTURE

(SCALE 1:20) (TYPE–C)

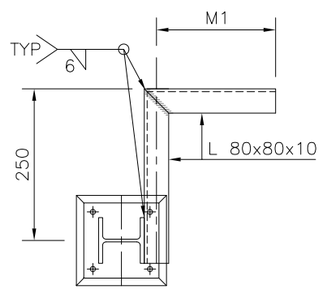

VIEW-Y

(SCALE 1:20)

REV.	DATE	DESCRIPTION OF REVISION	PREP'D:	CHECK	APPR.
0	18–03–2020	ISSUED FOR REVIEW	USA	AS	

PETROCHEMICAL ENGINEERING CONSULTANTS
C–2, BLOCK NO. 17, GULSHAN–E–IQBAL, NEAR NATIONAL STADIUM, KARACHI–75300. PAKISTAN.
TEL. +92 (21) 34827780, 34961088, FAX: +92 21 34961089, E–Mail: contact@pcec.com.pk web site: www.pcec.com.pk

CLIENT : OIL & GAS DEVELOPMENT COMPANY LTD.

PROJECT : DESIGN OF PANDHI TIE-IN AT SINJHORO PLANT

TITLE : FOUNDATION PLAN,SECTIONS & DETAIL FOR PIPE STRUCTURE SUPPORTS

JOB NO	DRAWING NO	SHEET NO	SCALE	SHEET SIZE	REV
0604246	0604246–CIV–DT–003	2 OF 2	AS SHOWN	A3	0

THIS DRAWING AND DESIGN IS THE PROPERTY OF PETROCHEMICAL AND MUST NOT BE COPIED OR PASSED TO ANY THIRD PARTY WITHOUT WRITTEN CONSENT FROM THE PETROCHEMICAL ENGINEERING CONSULTANTS

PETROCHEMICAL ENGINEERING CONSULTANTS
C-2, BLOCK NO. 17, GULSHAN-E-IQBAL, NEAR NATIONAL STADIUM, KARACHI-75300. PAKISTAN.
TEL. +92 (21) 34827780, 34961088, FAX: +92 21 34961089, E-Mail: contact@pcec.com.pk web site: www.pcec.com.pk

NO.	DATE	DESCRIPTION OF REVISION	PREP'D	CHECK	APP'D
0	18/03/20	ISSUED FOR REVIEW	USA	AS	

TITLE: SHOE SA-A

DWG. NO. 0604246-CIV-DT-004

FOR PIPE UP TO & INCLUDING
MAX WORKING TEMP. 100°C

SA-1A

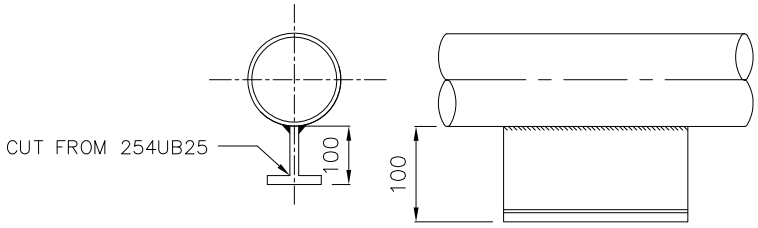

FOR PIPE 10" TO 12" NB
MAX WORKING TEMP. 400°C.

PL-C2A

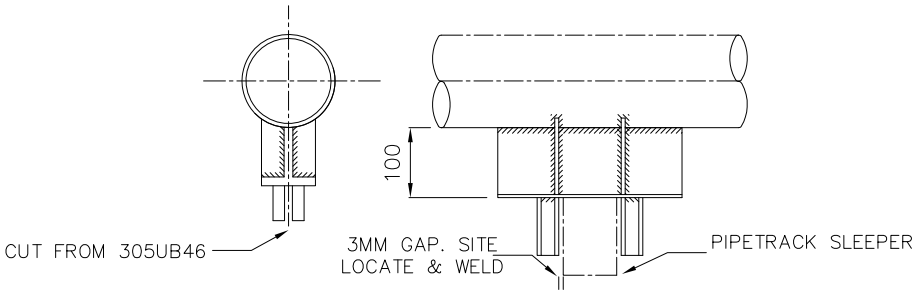

FOR PIPE 14" TO 24" NB
MAX WORKING TEMP. 400°C.

PL-C3A

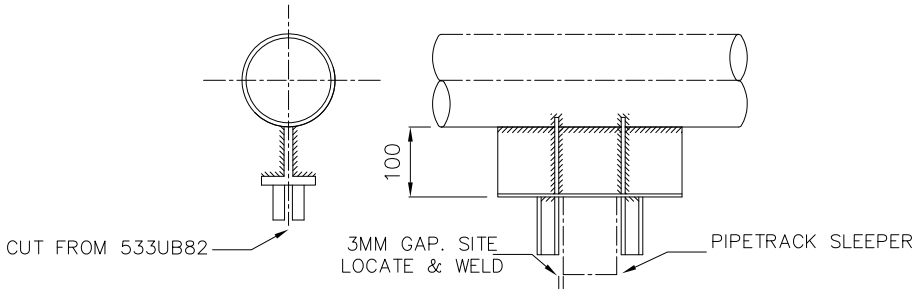

NOTE:

1. ALL WELDS TO BE 5MM CFW.

MATERIAL LIST

SUPPT. NO.	DESCRIPTION	QTY.
SA-1A	100x102Tx300 LONG	1
SA-2A	100x165Tx300 LONG	1
	150x12FLAT BARx130LG	2
SA-3A	100x204Tx300 LONG	1
	250x12FLAT BARx130LG	2

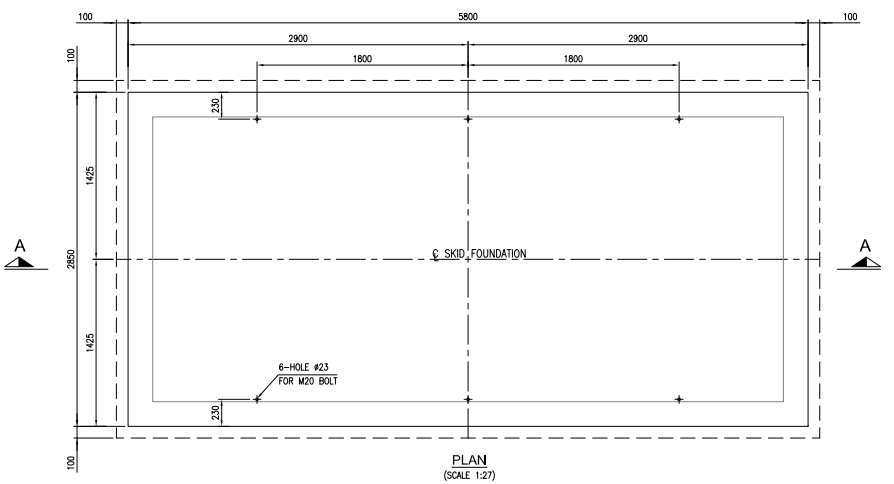

PLAN
(SCALE 1:27)

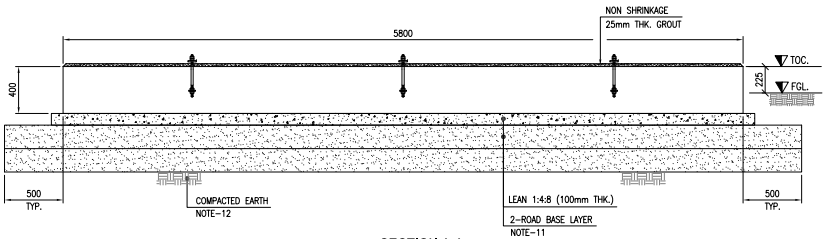

SECTION A-A
(SCALE 1:27)

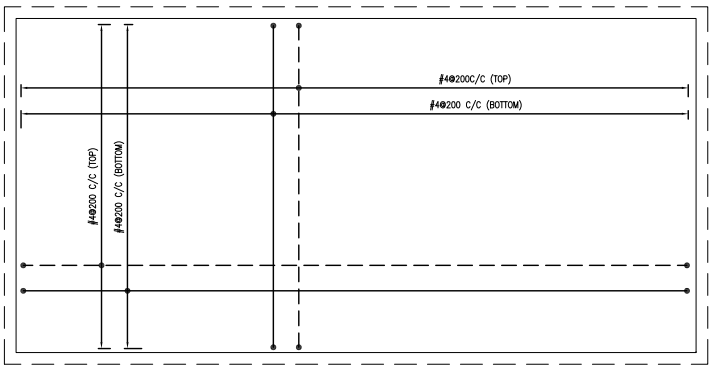

REINFORCEMENT PLAN
(SCALE 1:27)

NOTES:

1. ALL DIMENSIONS ARE IN MM UNLESS OTHERWISE NOTED.
2. CONTRACTOR WILL VERIFY ALL THE DIMENSIONS BEFORE EXECUTION OF WORK.
3. SULPHATE RESISTANT CEMENT SHOULD BE USED AND, REINFORCED CONCRETE SHOULD HAVE A 28 DAY CYLINDRICAL STRENGTH OF 3000 PSI.
4. BLINDING CONCRETE SHOULD BE AT LEAST 1:4:8 HAVING CYL. STRENGTH OF 1000 PSI.
5. CONCRETE SHOULD BE MECHANICALLY VIBRATED DURING POURING.
6. ALL STEEL SHOWN IN THIS DRAWING IS DEFORMED STEEL HAVING YIELD STRENGTH OF 60 KSI.
7. USE STEEL FORMWORK FOR ALL CONCRETE WORKS.
8. STAGGERED LAP SHOULD BE PROVIDED. LAP LENGTH SHOULD BE AS FOLLOWS:
   a) FOR #4 BAR : 610 mm
9. CONCRETE EXPOSED TO EARTH SURFACE SHOULD BE BITUMEN COATED.
10. PROVIDE 75MM CLEAR COVER TO REINFORCEMENT BARS.
11. PROVIDE TWO LAYERS OF ROAD BASE MATERIAL OF 250mm THICKNESS EACH, DIRECTLY UNDER THE FOUNDATION COMPACTED TO ACHIEVE 95% MODIFIED PROCTER.
12. EXCAVATED SURFACE SHOULD BE COMPACTED TO ACHIEVE A MINIMUM OF 98% PROCTOR MAXIMUM DRY DENSITY.

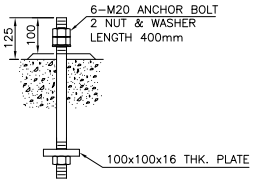

TYP. BOLT DETAIL

LEGEND:

FGL. = FINISH GROUND LEVEL
TOC. = TOP OF CONCRETE
TOG. = TOP OF GROUT

REV.	DATE	DESCRIPTION OF REVISION	PREP'D:	CHECK	APPR.
0	18-03-2020	ISSUED FOR REVIEW	USA	AS	

PETROCHEMICAL ENGINEERING CONSULTANTS
C-2, BLOCK NO. 17, GULSHAN-E-IQBAL, NEAR NATIONAL STADIUM, KARACHI-75300. PAKISTAN.
TEL. +92 (21) 34827780, 34961088, FAX: +92 21 34961089, E-Mail: contact@pcec.com.pk web site: www.pcec.com.pk

CLIENT : OIL & GAS DEVELOPMENT COMPANY LTD.

PROJECT : DESIGN OF PANDHI TIE-IN AT SINJHORO PLANT

TITLE : FOUNDATION PLAN & SECTION FOR HEATER

JOB NO	DRAWING NO	SHEET NO	SCALE	SHEET SIZE	REV
0604246	0604246-CIV-DT-005	1 OF 1	AS SHOWN	A3	0

THIS DRAWING AND DESIGN IS THE PROPERTY OF PETROCHEMICAL AND MUST NOT BE COPIED OR PASSED TO ANY THIRD PARTY WITHOUT WRITTEN CONSENT FROM THE PETROCHEMICAL ENGINEERING CONSULTANTS