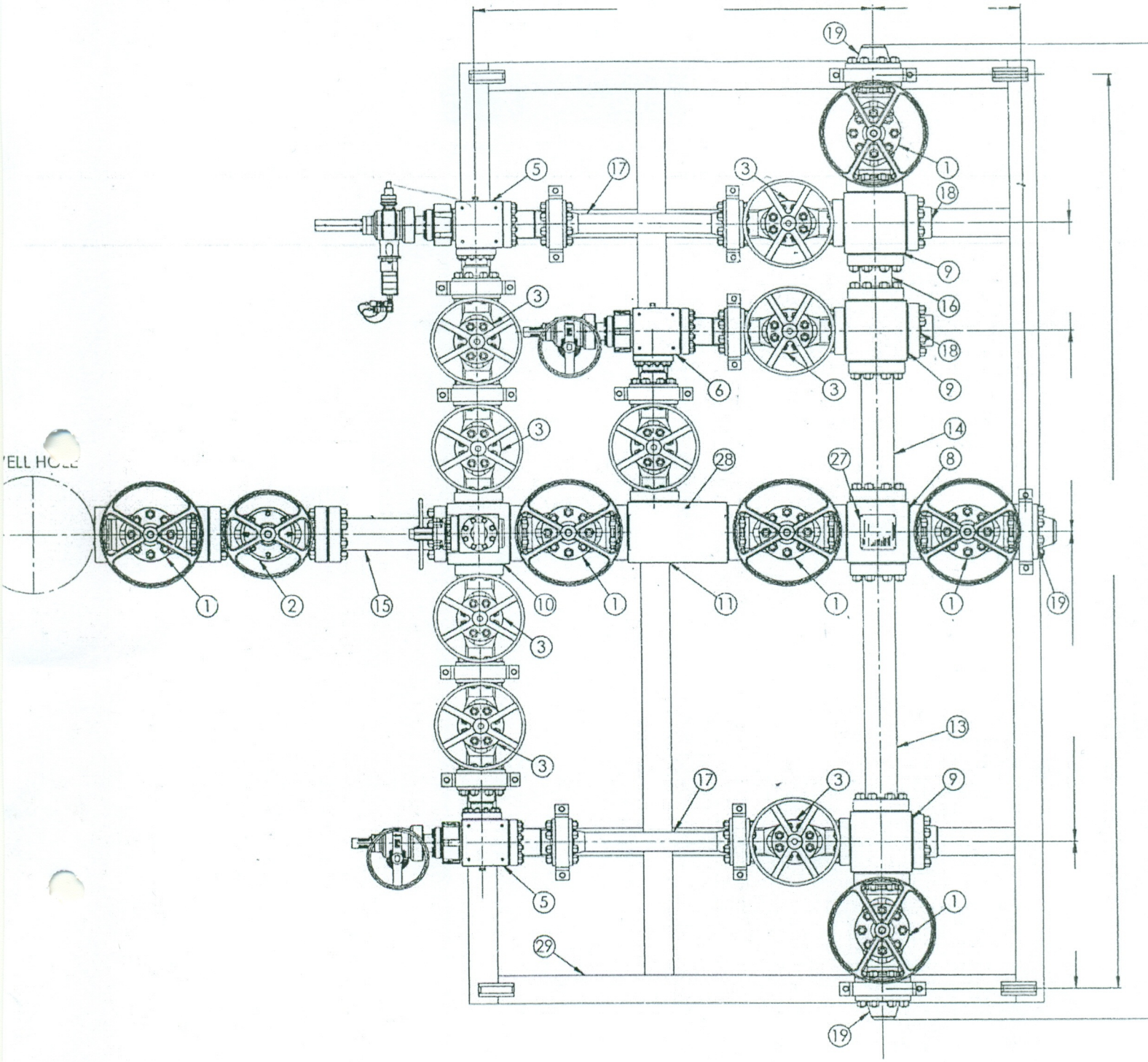
WELL HOLE
1
2
3
4
5
6
8
9
10
11
12
13
14
15
16
17
18
19
21
23
24
27
28
29

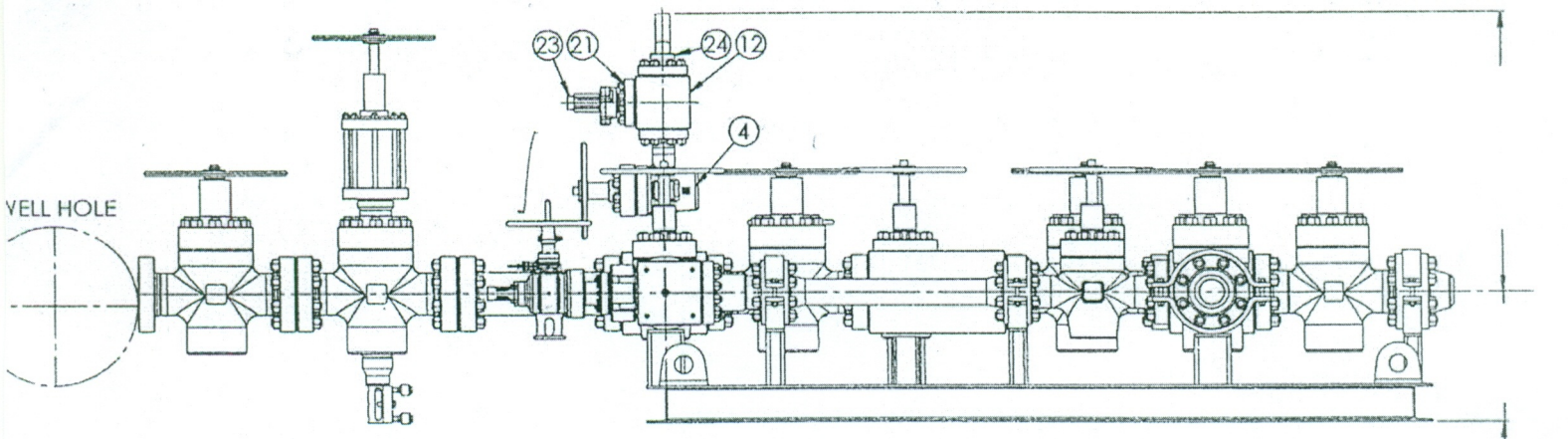
WELL HOLE
23
21
24
12
4

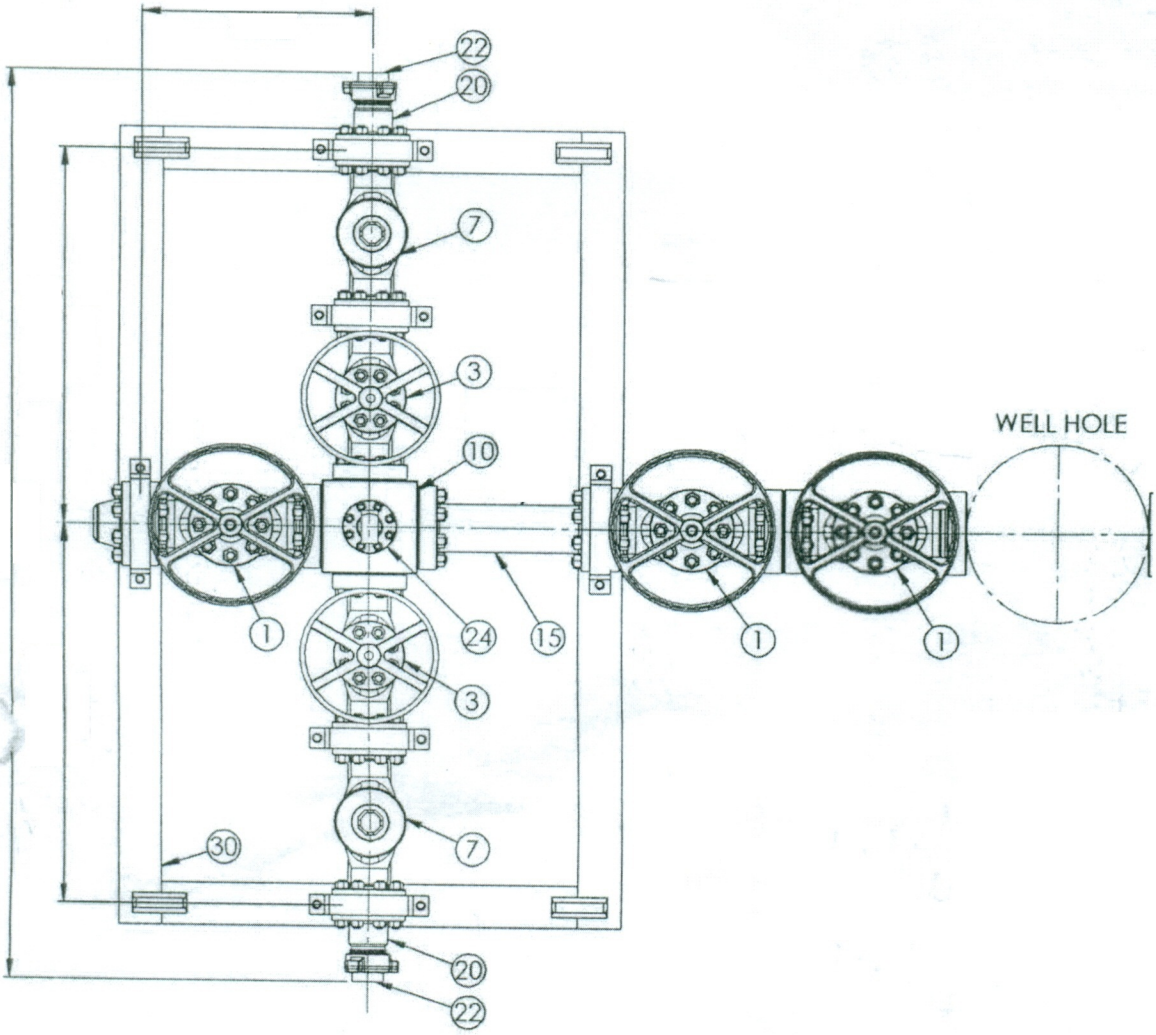
22
20
7
3
10
WELL HOLE
1
24
15
1
1
3
7
30
20
22

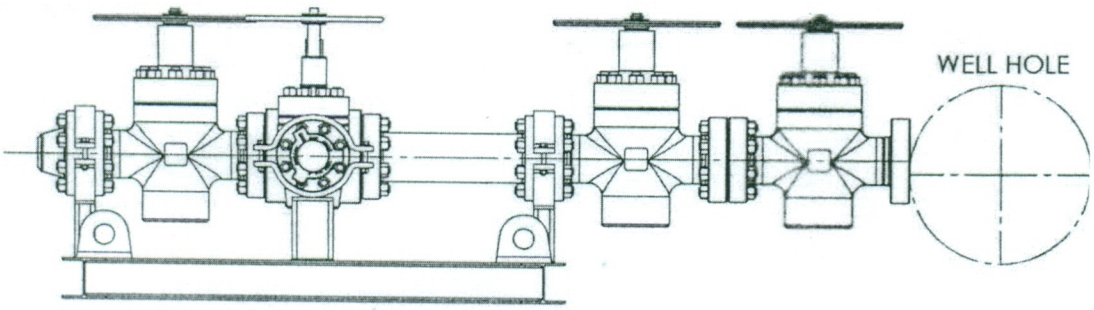
WELL HOLE